B65D

CONTAINERS FOR STORAGE OR TRANSPORT OF ARTICLES OR MATERIALS, e.g. BAGS, BARRELS, BOTTLES, BOXES, CANS, CARTONS, CRATES, DRUMS, JARS, TANKS, HOPPERS, FORWARDING CONTAINERS; ACCESSORIES, CLOSURES, OR FITTINGS THEREFOR; PACKAGING ELEMENTS; PACKAGES (containers specially adapted for storing agricultural or horticultural products A01F 25/14; containers specially adapted for use in dairies A01J; travelling bags or baskets, suitcases A45C; travelling or camp equipment A45F; [N: linkable display containers A47B87/00C]; household or table equipment A47G; letter-boxes for home use A47G 29/12; kitchen equipment A47J; associated with vehicles, see the appropriate subclass of B60 to B64; machines, apparatus, or devices for, or methods of, packaging articles or materials B65B; sack holders B65B 67/00; refuse receptacles B65F 1/00; handling sheets, webs or filamentary material B65H; load-engaging elements or devices attached to lifting or lowering gear of cranes or adapted for connection therewith for transmitting lifting forces B66C; liquid handling B67; storing gases F17; [N: packaging for photosensitive or like materials G03, e.g. G03C 3/00]; making containers, see subclasses dealing with the working of the material concerned)

Definition statement

This subclass/group covers:

- Containers, packaging elements or packages with auxiliary means or provisions for displaying articles or materials;

- Methods of packaging which are wholly characterised by the form of the package produced or the form of the container or packaging element used, as distinct from the operations performed or the apparatus employed, which are covered by subclass B65B.

- In this subclass, groups B65D 5/00, B65D 27/00, **B65D30/00** or B65D 65/00 include constructional features of foldable or erectable container or wrapper blanks as well as the containers or wrappers formed by folding or erecting such blanks.

- Containers, packaging elements or packages classified in group B65D 85/00, are also classified according to the constructional or functional features, if such features are of interest.

Special rules of classification within this subclass:

The FICLA or FTERM field gives the equivalent FICLA or F-Term class used by the JPO. This information is not systematically present since it is based on examiner's search experience.

A specially prepared B65D Classification Manual (EclaFig) is available to EPO examiners and contains essentially the same information as in this CPC Definitions.

- B65D 1/00 to B65D 90/66 are ECLA Reform Codes (i.e. Additional Information codes)
- **L65D100/00** IPC Codes (IPC 5th Edition): Tamper indicating means
- **L65D200/00** General Codes: codes which are applicable to all groups in B65D (i.e. from B65D 1/00 to **B65D90/99**)
- **L65D300/00** General Codes: codes which are applicable to all groups in B65D (i.e. from B65D 1/00 to **B65D90/99**)
- **L65D500/00** Specific Codes: codes which are applicable to documents in a main group or a group. If the code is applicable to the whole of the main group or a part of it (i.e. two or more groups), then it should include a Y - ending (e.g. 543/00Y1). If the codes are applicable to only one group then the code should use the groups numbering and a letter ending other than Y (e.g. B65D 2501/24363, B65D 2577/2008, B65D 2583/0404).

Glossary of terms

In this subclass/group, the following terms (or expressions) are used with the meaning indicated:

In this subclass/group, the following terms (or expressions) are used with the meanings indicated:

Rigid or semi-rigid containers	Containers not deformed by, or not taking-up the shape of, their contents; Containers adapted to be temporarily deformed to expel their contents; Pallets; Trays.
Flexible containers	Containers deformed by, or taking-up the shape of, their contents; Containers adapted to be permanently deformed to expel their contents.
Packaging elements	Elements, other than containers, for covering, protecting, stiffening, or

	holding together articles or materials to be stored or transported; Packaging materials of special type or form not provided for in other subclasses.
Packages	Combination of containers or packaging elements with articles or materials to be stored or transported: Articles joined together for convenience of storage or transport.
Paper	Includes materials, e.g. cardboard, plastic sheet materials, laminated materials, or metal foils, worked in a manner analogous to paper.
Large containers	Containers having about the size of containers used in container traffic, sometimes referred to as freight, forwarding or "ISO" (International Standardization) containers, or larger containers.

B65D 1/00

Containers having bodies formed in one piece, e.g. by casting metallic material, by moulding plastics, by blowing vitreous material, by throwing ceramic material, by moulding pulped fibrous material, by deep-drawing operations performed on sheet material (by winding, bending, or folding paper B65D 3/00, B65D 5/00; specially constructed to be opened by cutting, piercing, or tearing of wall portions B65D 17/00; pallets B65D 19/00; details of bottles or of jars B65D 23/00; bundles of articles held together by packaging elements for convenience of storage or transport, e. g. portable segregating carriers for plural receptacles such as beer cans, pop bottles, B65D 71/00)

References relevant to classification in this group

This subclass/group does not cover:

Producing hollow articles (plastic)	B29D 22/00

Informative references

Attention is drawn to the following places, which may be of interest for search:

Details of bottles or jars	B65D 23/00
Bundles of articles held together by packaging elements for convenience of storage or transport, e.g. portable segregating carriers for plural receptacles such as beer cans or pop bottles	B65D 71/00

B65D 1/02

Bottles or similar containers with necks or like restricted apertures, designed for pouring contents (thermally-insulated containers B65D 81/38, A47J 41/00; [N: feeding-bottles A61J 9/00])

References relevant to classification in this group

This subclass/group does not cover:

Integral bottle openers	B65D 1/0269

Informative references

Attention is drawn to the following places, which may be of interest for search:

Thermally insulated containers	A47J 41/00, B65D 81/38
For fabrication details	**L29C439/60**

Special rules of classification within this group

The use of available Indexing Codes is mandatory.

B65D 1/0207

[N: characterised by material, e.g. composition, physical features]

Informative references

Attention is drawn to the following places, which may be of interest for search:

For fabrication details	**L29C439/60**

Special rules of classification within this group

The use of available Indexing Codes is mandatory.

B65D 1/0215

[N: multilayered (B65D 81/3837 takes precedence)]

Definition statement

This subclass/group covers:
Illustrative example of subject matter classified in this group:

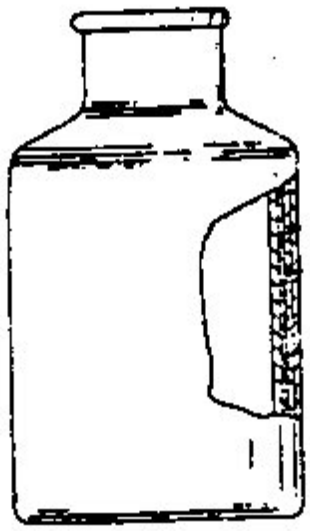

References relevant to classification in this group

This subclass/group does not cover:

Rigid container in the form of a bottle, jar or like container	B65D 81/3837

Informative references

Attention is drawn to the following places, which may be of interest for search:

Linings or internal coatings	B65D 23/02
Coverings or external coatings	B65D 23/08
For fabrication details	**L29C439/60**

Special rules of classification within this group

The use of available Indexing Codes is mandatory.

B65D 1/0223

[N: characterised by shape]

Informative references

Attention is drawn to the following places, which may be of interest for search:

For tearing along a line or from a point of weakness provided in the sidewall	B65D 17/168
For fabrication details	**L29C439/60**

Special rules of classification within this group

The use of available Indexing Codes is mandatory.

B65D 1/023

[N: Neck construction]

Definition statement

This subclass/group covers:
Illustrative example of subject matter classified in this group:

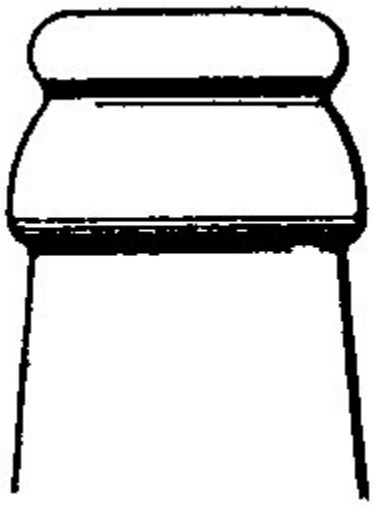

Informative references

Attention is drawn to the following places, which may be of interest for search:

For fabrication details	**L29C439/60**

Special rules of classification within this group

The use of available Indexing Codes is mandatory.

B65D 1/0238

[N: Integral frangible closures]

Definition statement

This subclass/group covers:
Illustrative example of subject matter classified in this group:

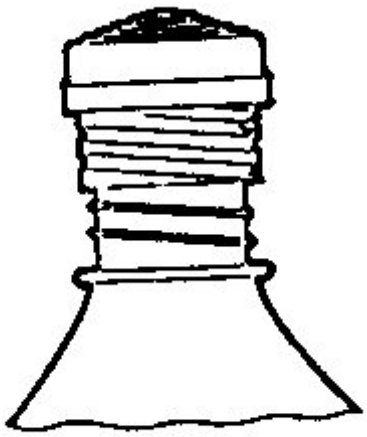

Informative references

Attention is drawn to the following places, which may be of interest for search:

Integral, or permanently secured, end or side closures	B65D 17/06
By destroying, in the act of opening the container, an integral portion thereof	B65D 49/12

Special rules of classification within this group

The use of available Indexing Codes is mandatory.

B65D 1/0246

[N: Closure retaining means, e.g. beads, screw-threads]

Definition statement

This subclass/group covers:

Illustrative example of subject matter classified in this group:

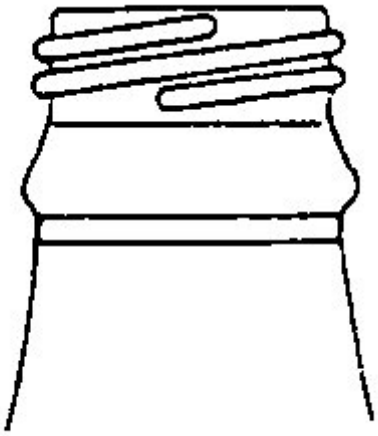

Special rules of classification within this group

The use of available Indexing Codes is mandatory.

B65D 1/0253

[N: Means facilitating removal of the closure, e.g. cams, levers]

Definition statement

This subclass/group covers:
Illustrative example of subject matter classified in this group:

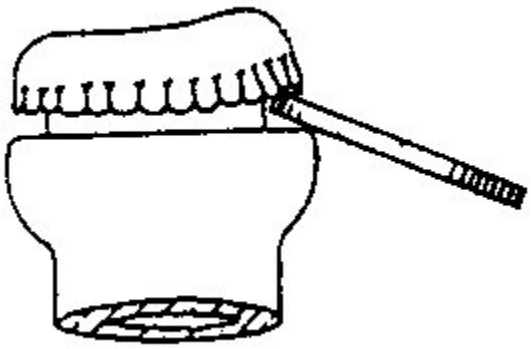

Special rules of classification within this group

The use of available Indexing Codes is mandatory.

B65D 1/0261

[N: Bottom construction (B65D 1/06 takes precedence)]

Definition statement

This subclass/group covers:
Illustrative example of subject matter classified in this group:

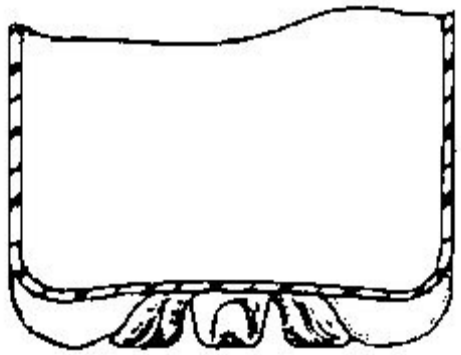

References relevant to classification in this group

This subclass/group does not cover:

With closable apertures at bottom	B65D 1/06

Informative references

Attention is drawn to the following places, which may be of interest for search:

For fabrication details	**L29C439/60**

Special rules of classification within this group

The use of available Indexing Codes is mandatory.

B65D 1/0269

[N: Openers]

Definition statement

This subclass/group covers:
Illustrative example of subject matter classified in this group:

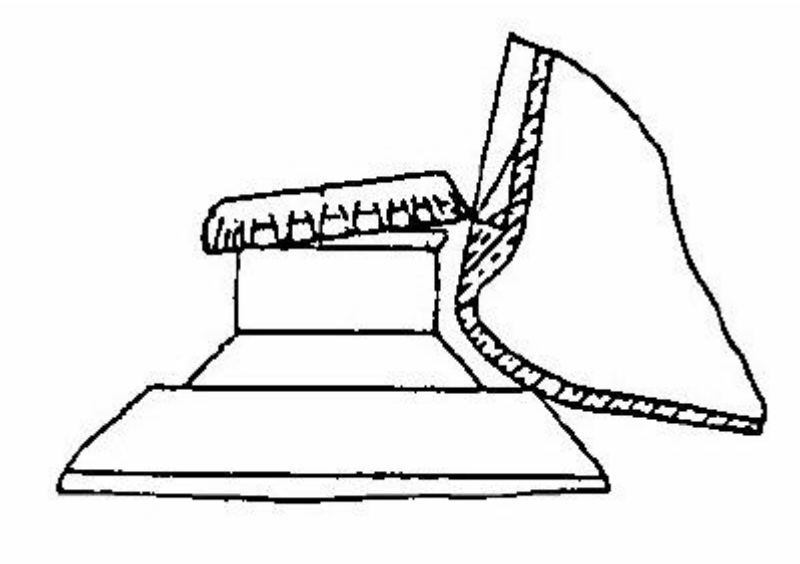

Special rules of classification within this group

The use of available Indexing Codes is mandatory.

B65D 1/0276

[N: having a continuous contact surface, e.g. Champagne-type bottom]

Definition statement

This subclass/group covers:

Illustrative example of subject matter classified in this group:

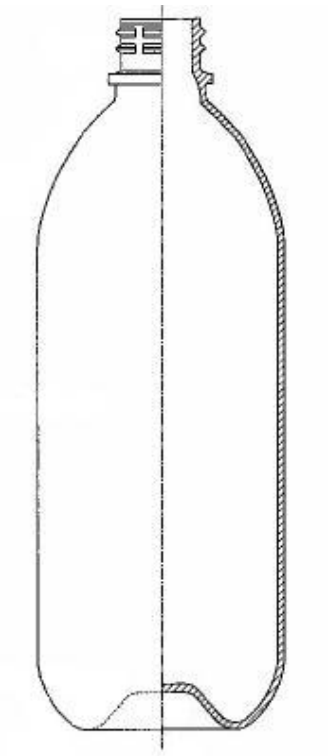

Special rules of classification within this group

The use of available Indexing Codes is mandatory.

B65D 1/0284

[N: having a discontinuous contact surface, e.g. discrete feet]

Definition statement

This subclass/group covers:
Illustrative example of subject matter classified in this group:

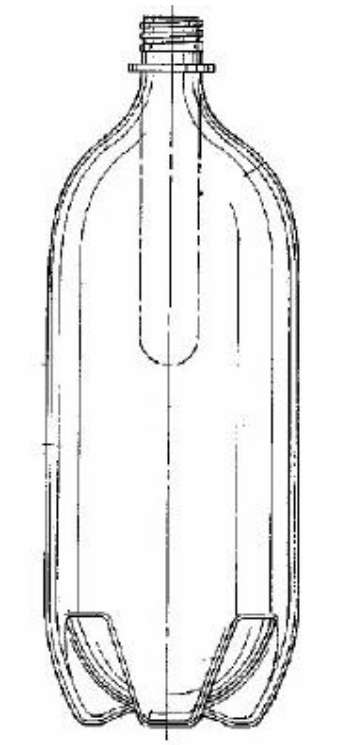

Special rules of classification within this group

The use of available Indexing Codes is mandatory.

B65D 1/0292

[N: Foldable bottles]

Definition statement

This subclass/group covers:
Illustrative example of subject matter classified in this group:

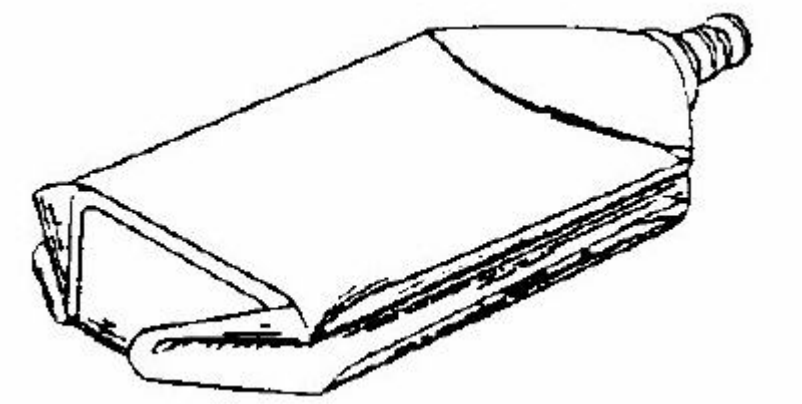

References relevant to classification in this group

This subclass/group does not cover:

Bottles made of several parts with variable capacity	B65D 11/04
Other foldable containers of the same construction	B65D 21/08
'Accordion' bottles, bottles collapsing within themselves see also	B65D 1/32

Informative references

Attention is drawn to the following places, which may be of interest for search:

For fabrication details	**L29C439/60**

Special rules of classification within this group

The use of available Indexing Codes is mandatory.

B65D 1/04

Multi-cavity bottles

Definition statement

This subclass/group covers:
Illustrative example of subject matter classified in this group:

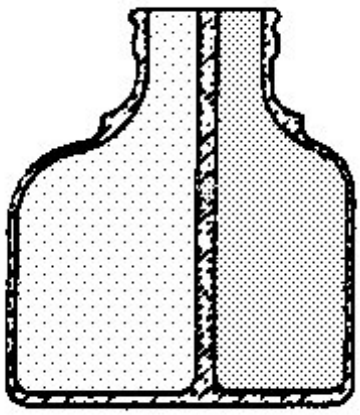

Informative references

Attention is drawn to the following places, which may be of interest for search:

Rigid containers disposed one within the other arranged parallel or concentrically and permitting simultaneous dispensing of the two materials without prior mixing	B65D 81/3227
Flexible containers disposed within rigid containers arranged parallel or concentrically and permitting simultaneous dispensing of the two materials without prior mixing	B65D 81/3244
Cylindrical or polygon containers	B65D 81/3283

B65D 1/06

with closable apertures at bottom

Definition statement

This subclass/group covers:

Illustrative example of subject matter classified in this group:

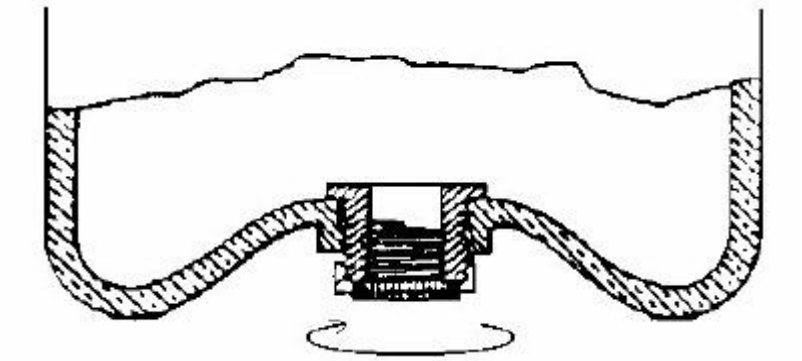

B65D 1/08

adapted to discharge drops (droppers B65D 47/18)

Definition statement

This subclass/group covers:

Illustrative example of subject matter classified in this group:

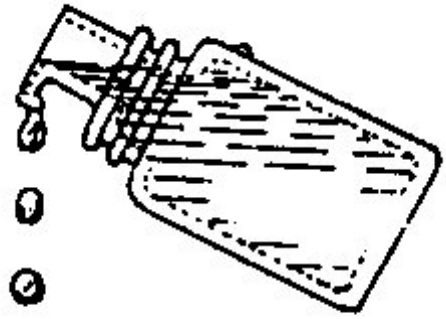

References relevant to classification in this group

This subclass/group does not cover:

Droppers in general	B01L 3/00
Eye-droppers	A61F 9/0008

B65D 1/09

Ampoules (specially adapted for medical or pharmaceutical purposes A61J 1/06)

Definition statement

This subclass/group covers:

Illustrative example of subject matter classified in this group:

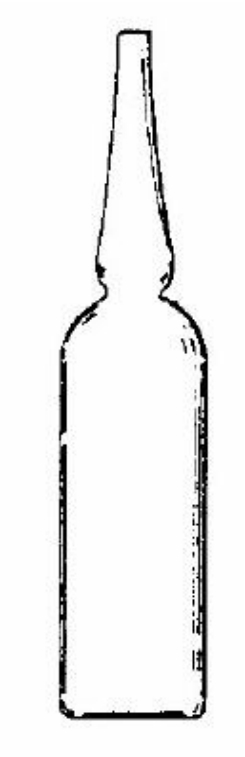

Informative references

Attention is drawn to the following places, which may be of interest for search:

Integral frangible closures	B65D 1/0238
Ampoules	B65D 81/3277

B65D 1/095

[N: made of flexible material]

Definition statement

This subclass/group covers:
Illustrative example of subject matter classified in this group:

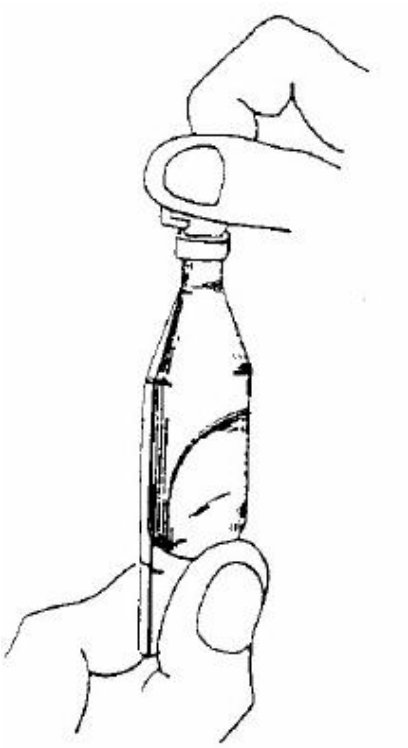

Informative references

Attention is drawn to the following places, which may be of interest for search:

Integral frangible closures	B65D 1/0238
Flexible ampoules, the contents of which are expelled by squeezing	A61J 1/067

B65D 1/12

Cans, casks, barrels, or drums

References relevant to classification in this group

This subclass/group does not cover:

Oil cans used also to receive used oil	F01M 11/0458, F16N 31/002

Informative references

Attention is drawn to the following places, which may be of interest for search:

Bottles, canisters or jars whereby the neck or handle project into a	B65D 21/0231

cooperating cavity in the bottom	

B65D 1/14

characterised by shape

Informative references

Attention is drawn to the following places, which may be of interest for search:

Bottles, canisters or jars whereby the neck or handle project into a cooperating cavity in the bottom	B65D 21/0231

B65D 1/165

[N: Cylindrical cans]

Definition statement

This subclass/group covers:

Illustrative example of subject matter classified in this group:

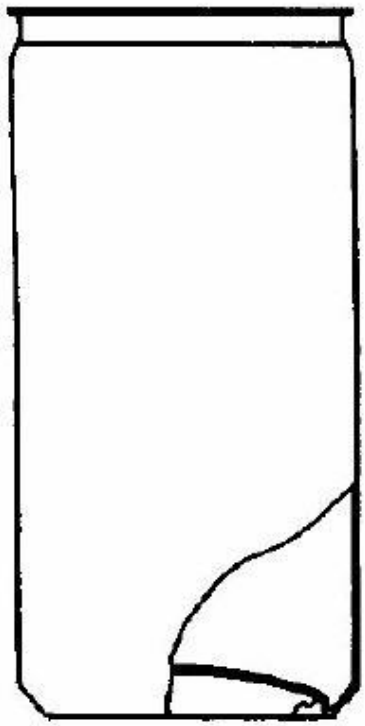

B65D 1/20

characterised by location or arrangement of filling or discharge apertures

Definition statement

This subclass/group covers:

Illustrative example of subject matter classified in this group:

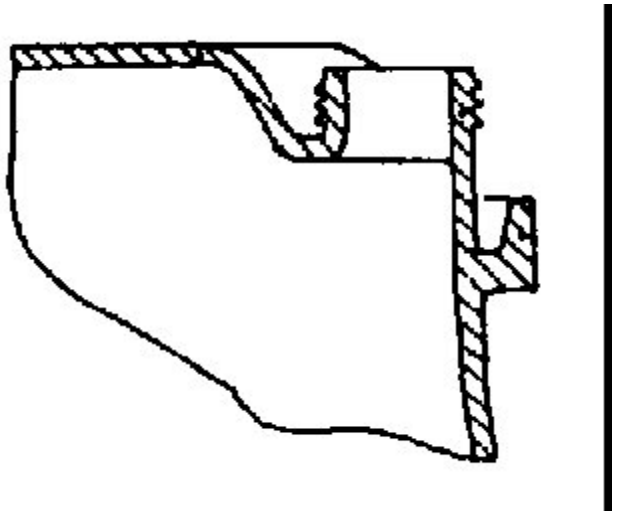

References relevant to classification in this group

This subclass/group does not cover:

Made of several parts	B65D 7/40, B65D 11/08

B65D 1/22

Boxes or like containers with side walls of substantial depth for enclosing contents [N: (B65D 43/162, B65D 81/02, B65D 81/3813 take precedence)]

References relevant to classification in this group

This subclass/group does not cover:

For the making of open containers	**L29C439/02**
The container, the lid and the hinge being made of one piece	B65D 43/162
Specially adapted to protect contents from mechanical damage	B65D 81/02

Rigid container being in the form of a box, tray or like container	B65D 81/3813

B65D 1/225

[N: Collapsible boxes]

Definition statement

This subclass/group covers:

Illustrative example of subject matter classified in this group:

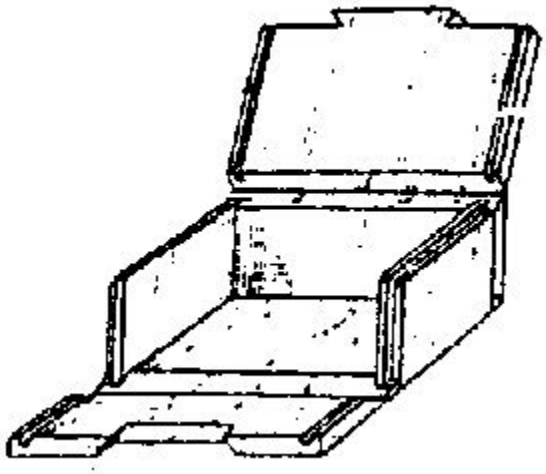

References relevant to classification in this group

This subclass/group does not cover:

Made by folding a blank of plastic material	B65D 5/00, B65D 2301/20
Made of two or more pieces	B65D 11/186

B65D 1/24

with moulded compartments or partitions

References relevant to classification in this group

This subclass/group does not cover:

For the making of crates	**L29C439/14**

B65D 1/243

[N: Crates for bottles or like containers]

Definition statement

This subclass/group covers:
Illustrative example of subject matter classified in this group:

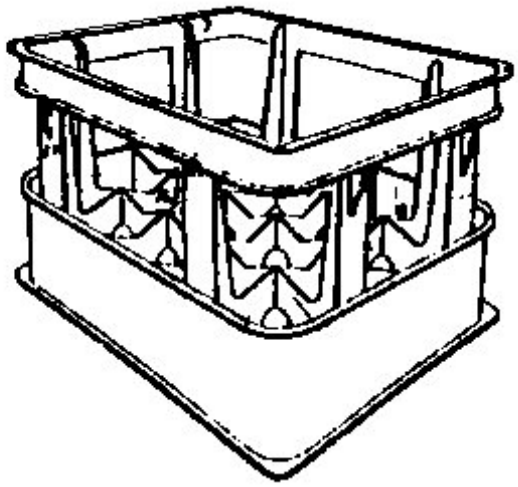

References relevant to classification in this group

This subclass/group does not cover:

If no partitions or pillars	B65D 1/22
For the making of crates	**L29C439/14**

Informative references

Attention is drawn to the following places, which may be of interest for search:

Bottle-crates	B65D 85/305

Special rules of classification within this group

The use of available Indexing Codes is mandatory.

B65D 1/246

[N: Cover elements inserted in crates]

Definition statement

This subclass/group covers:
Illustrative example of subject matter classified in this group:

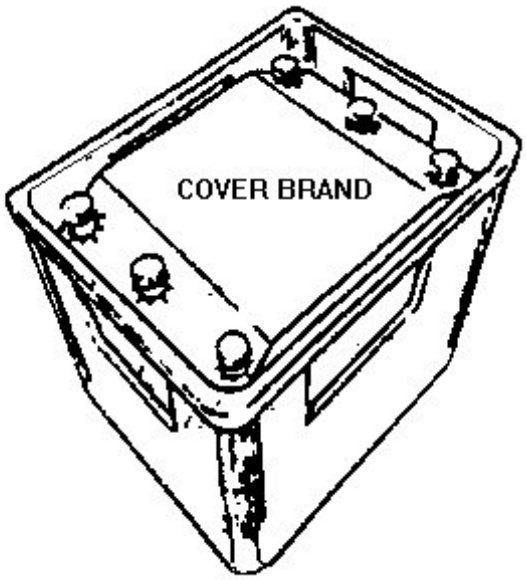

B65D 1/265

[N: Drinking cups (B65D 81/3865 takes precedence, holders for plastic cups A47G 23/0208)]

Definition statement

This subclass/group covers:
Illustrative example of subject matter classified in this group:



References relevant to classification in this group

This subclass/group does not cover:

Drinking vessels or saucers used for table service	A47G 19/22
Drinking cups or like containers	B65D 81/3865

Informative references

Attention is drawn to the following places, which may be of interest for search:

Nestable cups, but nestable containers in general	B65D 21/0233

B65D 1/28

formed of laminated material

Definition statement

This subclass/group covers:

Illustrative example of subject matter classified in this group:

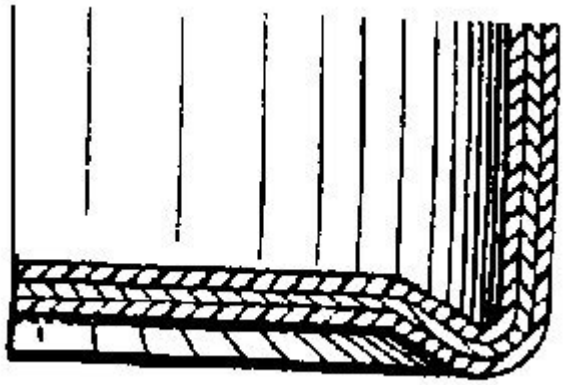

B65D 1/30

Groups of containers joined together end-to-end or side-by-side

Definition statement

This subclass/group covers:

Illustrative example of subject matter classified in this group:

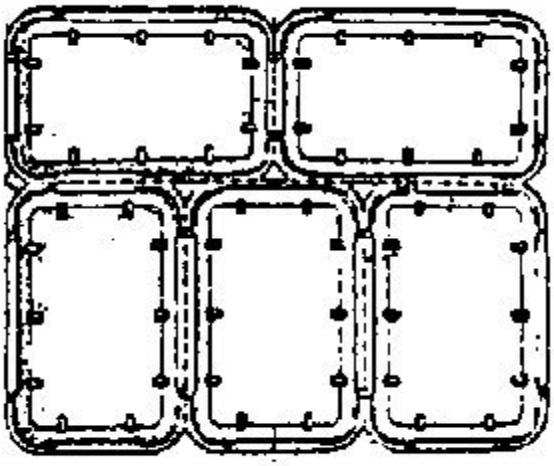

References relevant to classification in this group

This subclass/group does not cover:

Freezing trays for ice-cubes	F25C 1/243

Informative references

Attention is drawn to the following places, which may be of interest for search:

Articles joined together for convenience of storage or transport without the use of packaging elements	B65D 69/00
The sheet or blank being recessed to accommodate contents and formed with several recesses to accommodate a series of articles or quantities of materials	B65D 75/24
One or both sheets or blanks being recessed to accommodate contents and having several recesses to accommodate a series of articles or quantities of material	B65D 75/34

B65D 1/32

Containers adapted to be temporarily deformed by external pressure to expel contents ([N: B65D 47/2018, B65D 83/0055 take precedence]; containers for pharmaceutical purposes A61J 1/20, A61M 5/19; containers with disinfecting linings A61L 2/00; liquid sprayers B05B; Kaufman type dispensers based on the siphon principle, e.g. for ketchup, B67D5/02C; oil cans F16N 3/00)

Definition statement

This subclass/group covers:

Illustrative example of subject matter classified in this group:

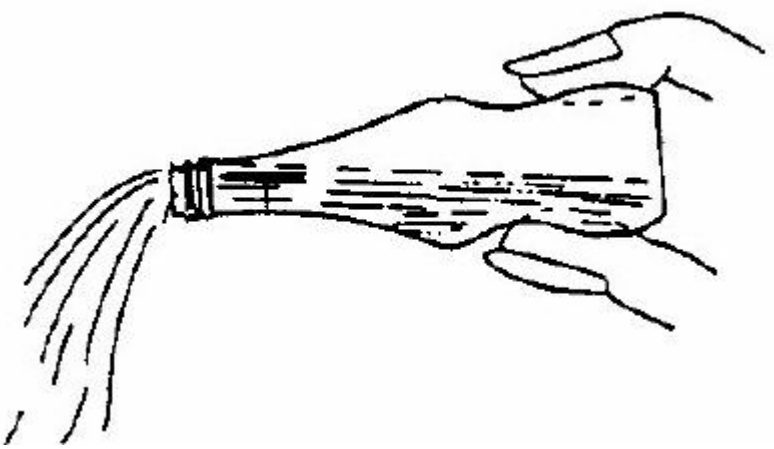

References relevant to classification in this group

This subclass/group does not cover:

Examples of places where the subject matter of this group is covered when specially adapted, used for a particular purpose, or incorporated in a larger system:

Containers with disinfectant linings	A61L 2/00

Informative references

Attention is drawn to the following places, which may be of interest for search:

Foldable bottles	B65D 1/0292
Body construction made in one piece	B65D 35/04
Body construction made in one piece from metallic material	B65D 35/06
Body construction made in one piece from plastics material	B65D 35/08
Containers having an external wall formed as, or with, a diaphragm or the like which is deformed to expel the contents	B65D 83/0094

B65D 1/323

[N: the container comprising internally a dip tube through which the contents pass]

Definition statement

This subclass/group covers:

Illustrative example of subject matter classified in this group:

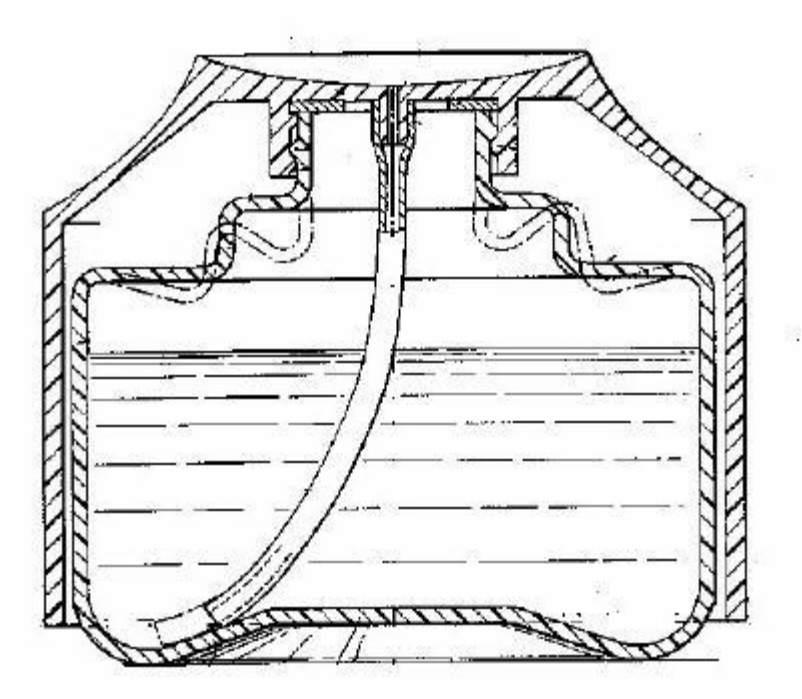

B65D 1/326

[N: the container comprising an, externally located, integrally formed tube through which the contents pass (integrally formed suction tubes B65D 77/286)]

Definition statement

This subclass/group covers:

Illustrative example of subject matter classified in this group:

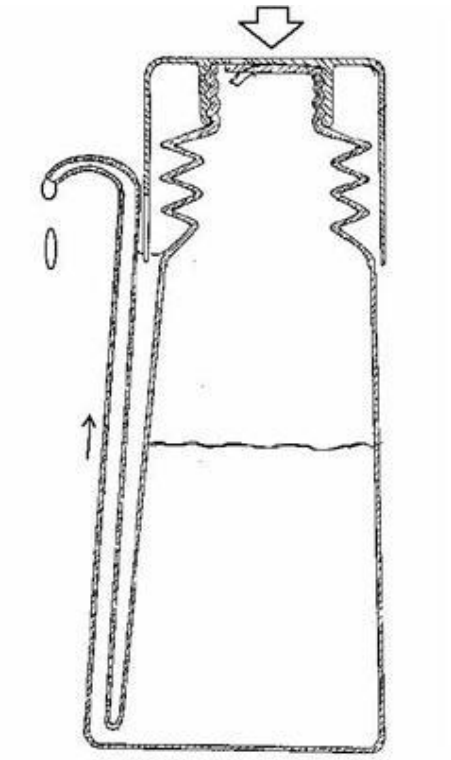

B65D 1/34

Trays or like shallow containers [N: B65D 81/3813 takes precedence]

Definition statement

This subclass/group covers:

Illustrative example of subject matter classified in this group:

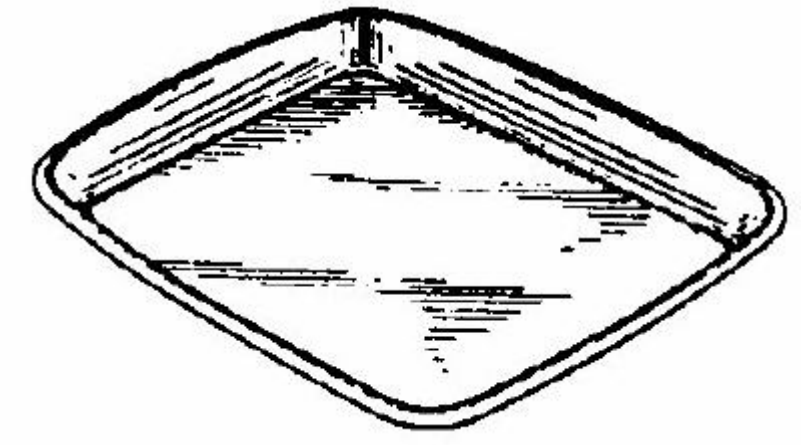

References relevant to classification in this group

This subclass/group does not cover:

For draining or collecting liquids without absorbing them	B65D 81/261
For absorbing liquids	B65D 81/264
Rigid container being in the form of a box, tray or like container	B65D 81/3813
Freezing trays for ice-cubes	F25C 1/243

B65D 1/36

with moulded compartments or partitions

Definition statement

This subclass/group covers:

Illustrative example of subject matter classified in this group:

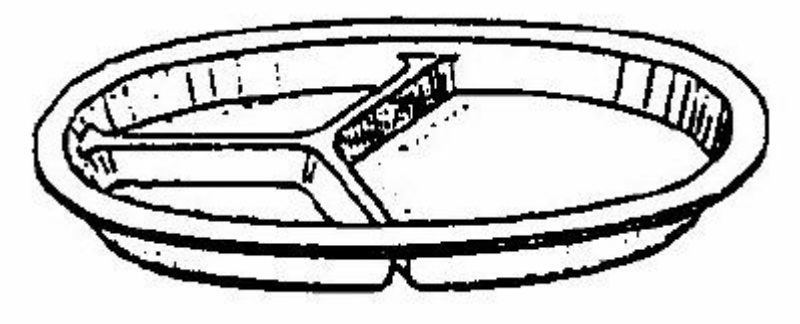

References relevant to classification in this group

This subclass/group does not cover:

Plates with integral holders for spoons, glasses, or the like	A47G 19/06
Serving trays	A47G 23/06

Informative references

Attention is drawn to the following places, which may be of interest for search:

Tray-like elements formed in one piece	B65D 5/503

Applications of resilient shock-absorbing materials	B65D 65/44
Thermoformed trays or the like with a plurality of recesses for different materials located in different recesses	B65D 81/3294
For fruit	B65D 85/34

B65D 1/38

Baskets or like containers of skeleton or apertured construction, [N: (crates for bottles or like containers B65D 1/243)]

Definition statement

This subclass/group covers:

Illustrative example of subject matter classified in this group:

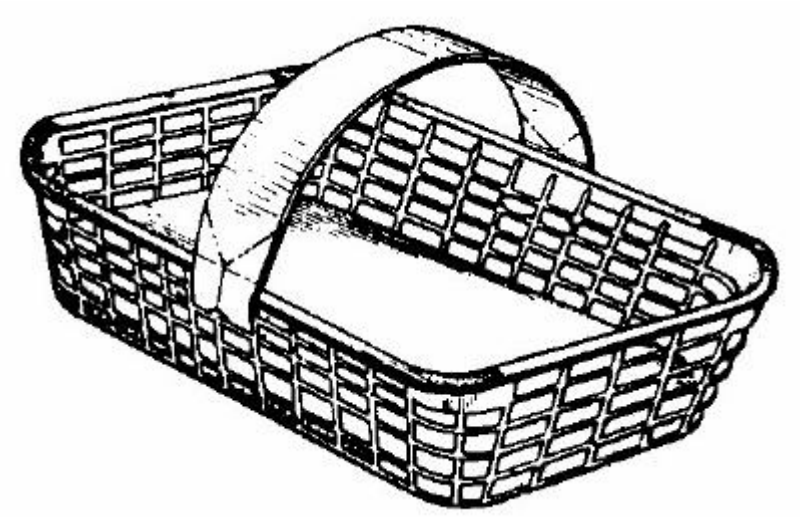

References relevant to classification in this group

This subclass/group does not cover:

Flexible, net-like containers made of plastic material	B65D 29/04

Informative references

Attention is drawn to the following places, which may be of interest for search:

Containers having bodies formed by inter-connecting or uniting two or more rigid, or substantially rigid, components made wholly or mainly of plastics material of skeleton or apertured construction	B65D 11/14
Net-like containers made of plastics material	B65D 29/04

B65D 1/40

Details of walls (other container details B65D 23/00, B65D 25/00)

References relevant to classification in this group

This subclass/group does not cover:

Deformable walls for indicating or neutralising internal pressure variations	B65D 79/005

Informative references

Attention is drawn to the following places, which may be of interest for search:

Other container details	B65D 23/00, B65D 25/00

B65D 1/46

Local reinforcements, e.g. adjacent closures

Definition statement

This subclass/group covers:

Illustrative example of subject matter classified in this group:

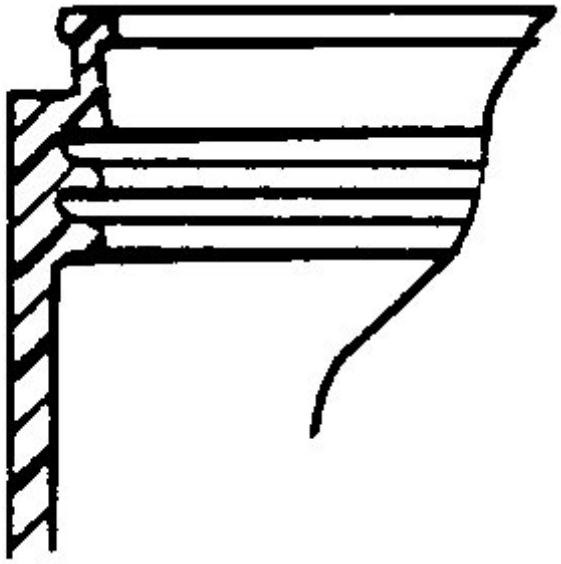

B65D 1/48

Reinforcements of dissimilar materials, e.g. metal frames in plastic walls

Definition statement

This subclass/group covers:

Illustrative example of subject matter classified in this group:

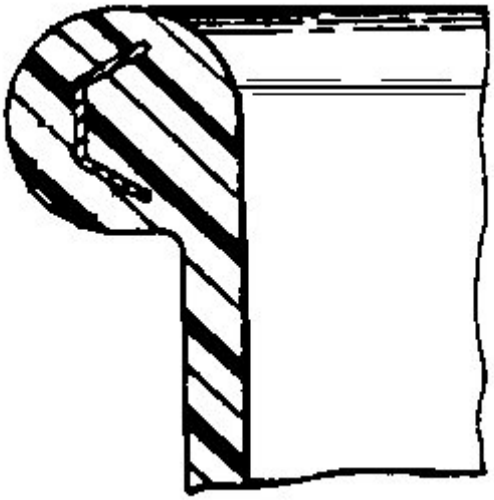

B65D 3/00

Containers having bodies or peripheral walls of curved or partially curved cross-section made by winding or bending

paper without folding along defined lines (with end walls of different materials B65D 15/00)

Informative references

Attention is drawn to the following places, which may be of interest for search:

The tubular body having a curved or partially curved cross-section	B65D 5/0209

B65D 3/08

having a cross-section of varying shape, e.g. circular merging into square or rectangular

Definition statement

This subclass/group covers:

Illustrative example of subject matter classified in this group:

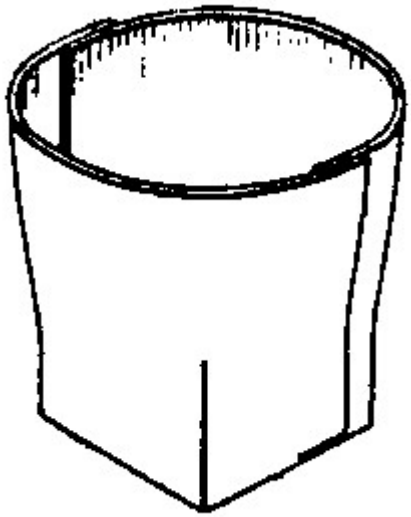

Informative references

Attention is drawn to the following places, which may be of interest for search:

The tubular body having a curved or partially curved cross-section	B65D 5/0209

B65D 3/10

characterised by form of integral or permanently secured end closure

References relevant to classification in this group

This subclass/group does not cover:

End closure not made of paper	B65D 15/04

B65D 3/12

Flanged discs permanently secured, e.g. by adhesives, by heat-sealing

Definition statement

This subclass/group covers:

Illustrative example of subject matter classified in this group:

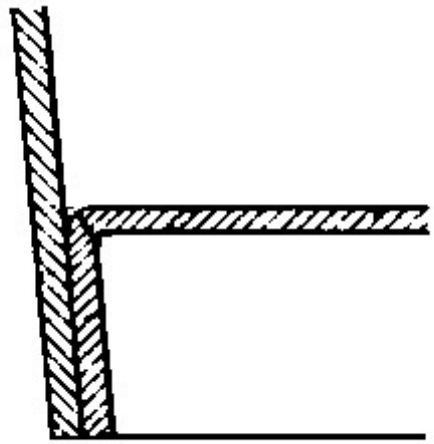

B65D 3/14

Discs fitting within container end and secured by bending, rolling, or folding operations

Definition statement

This subclass/group covers:

Illustrative example of subject matter classified in this group:

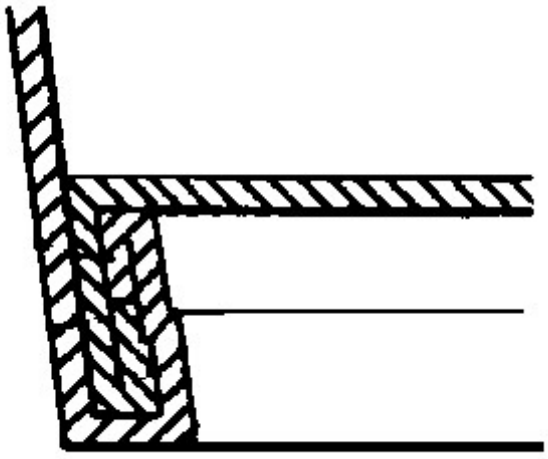

B65D 3/16

Discs without flanges engaging a groove in the container body

Definition statement

This subclass/group covers:

Illustrative example of subject matter classified in this group:

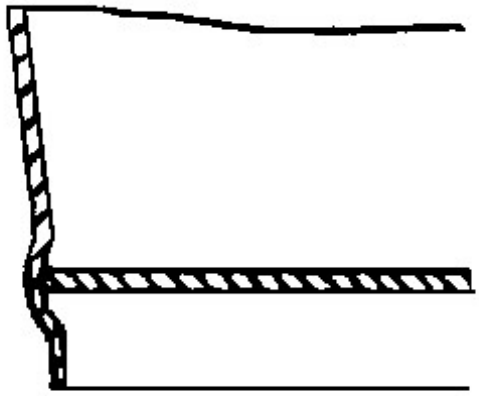

B65D 3/18

and secured by rolling in the end of the body

Definition statement

This subclass/group covers:

Illustrative example of subject matter classified in this group:

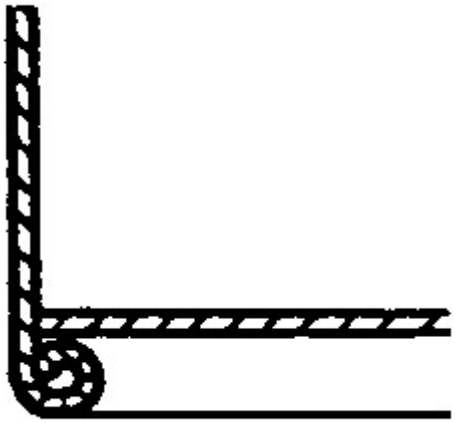

B65D 3/20

with end portion of body adapted to be closed, by flattening or folding operations, e.g. formed with crease lines or flaps

Definition statement

This subclass/group covers:

Illustrative example of subject matter classified in this group:

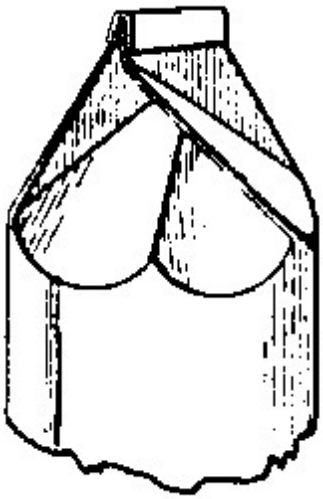

B65D 3/22

with double walls; with walls incorporating air-chambers; with walls made of laminated material [N: (for thermal insulating purposes B65D 81/3818)]

Definition statement

This subclass/group covers:
Illustrative example of subject matter classified in this group:

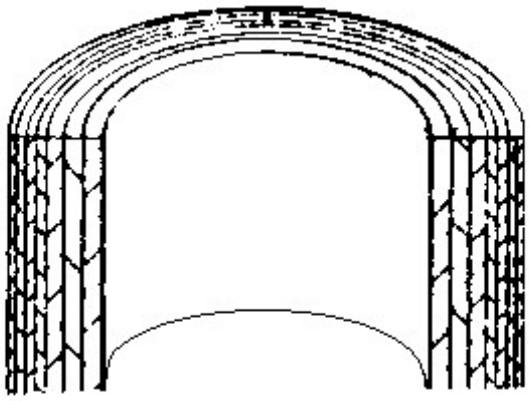

B65D 3/262

[N: forming a circumferential line of weakness]

Definition statement

This subclass/group covers:
Illustrative example of subject matter classified in this group:

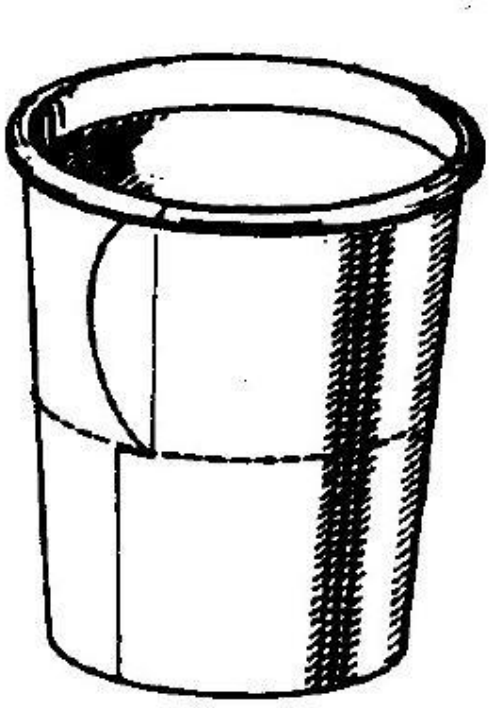

Informative references

Attention is drawn to the following places, which may be of interest for search:

Tear-lines for removing successive sections of a package	B65D 75/5888

B65D 3/263

[N: and having an attached or applied tearing or reinforcing element]

Definition statement

This subclass/group covers:

Illustrative example of subject matter classified in this group:

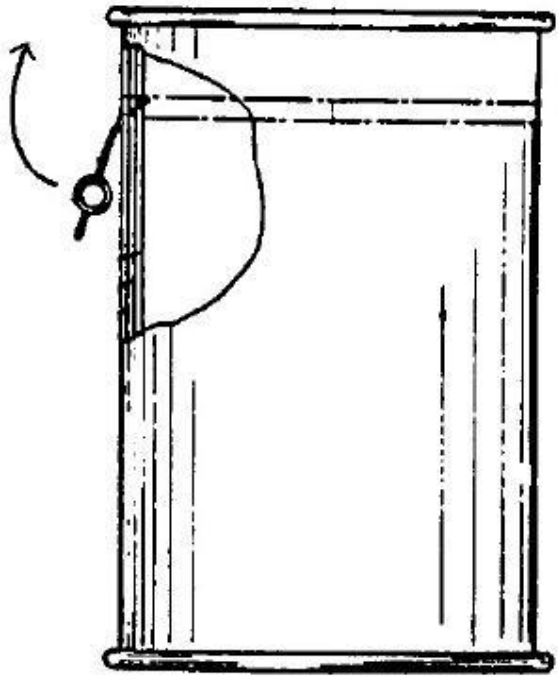

B65D 3/264

[N: forming a longitudinal line of weakness]

Definition statement

This subclass/group covers:

Illustrative example of subject matter classified in this group:

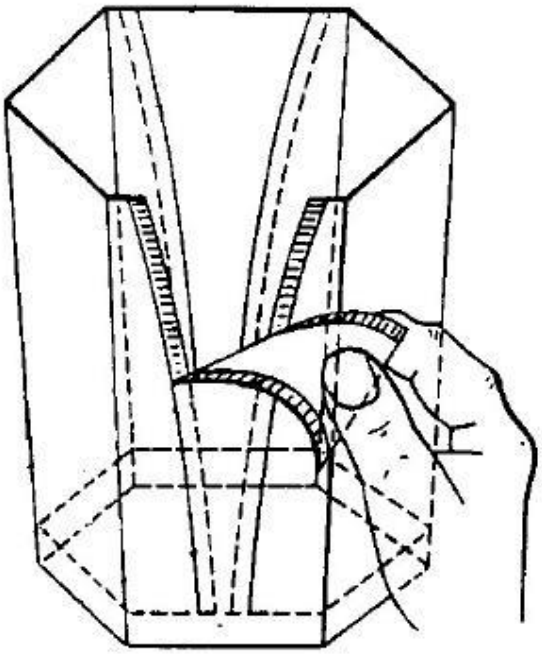

B65D 3/265

[N: and having an attached or applied tearing or reinforcing element]

Definition statement

This subclass/group covers:

Illustrative example of subject matter classified in this group:

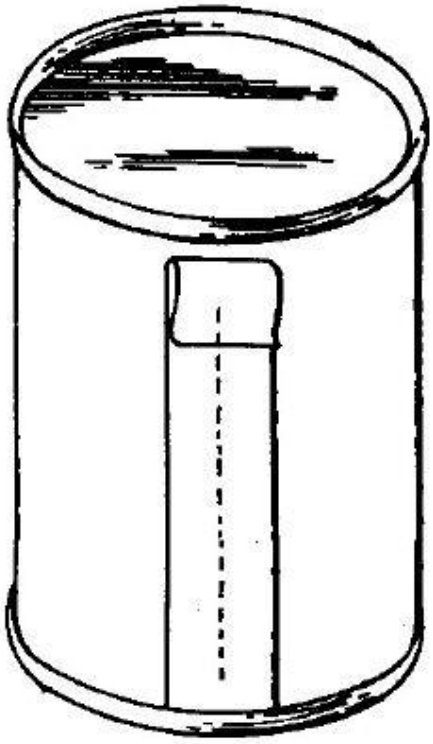

B65D 3/266

[N: forming a helical line of weakness]

Definition statement

This subclass/group covers:
Illustrative example of subject matter classified in this group:

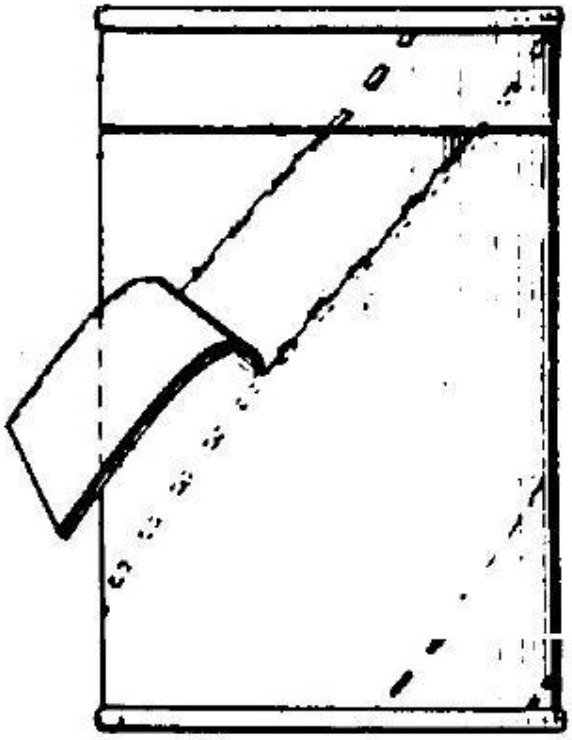

B65D 3/267

[N: and having an attached or applied tearing or reinforcing element]

Definition statement

This subclass/group covers:

Illustrative example of subject matter classified in this group:

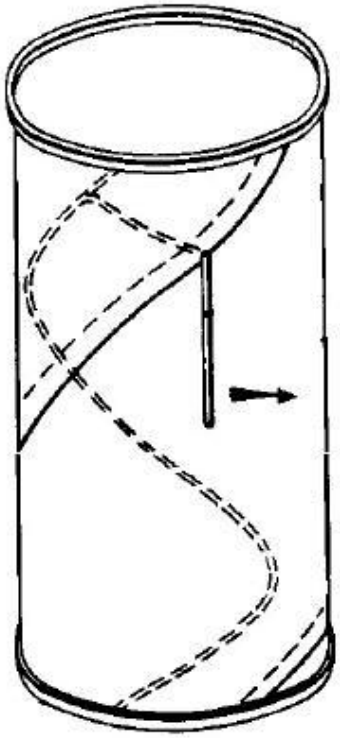

B65D 3/268

[N: the opening arrangement being located in a container closure]

Definition statement

This subclass/group covers:

Illustrative example of subject matter classified in this group:

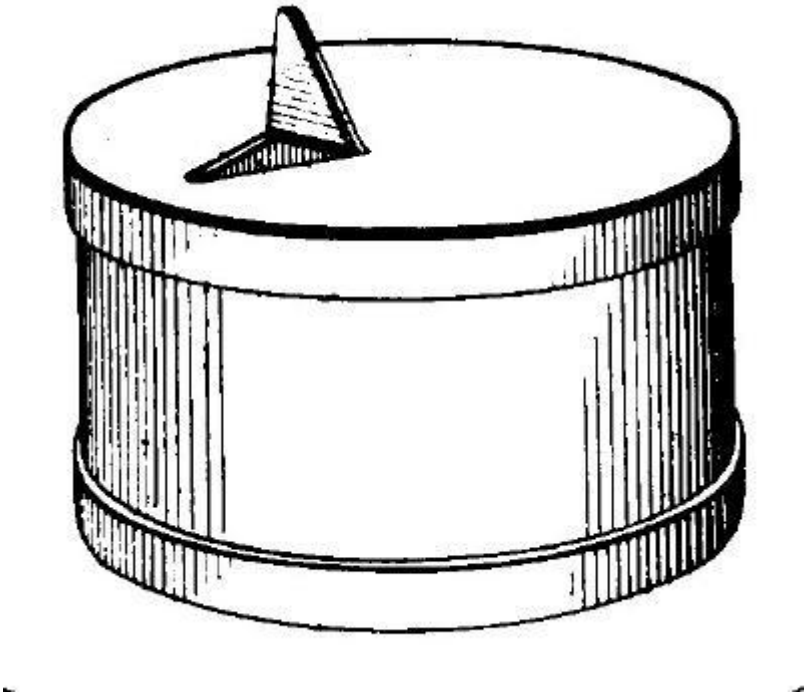

B65D 3/28

Other details of walls

Special rules of classification within this group

The use of available Indexing Codes is mandatory.

B65D 3/30

Local reinforcements, e.g. metallic rims

Definition statement

This subclass/group covers:
Illustrative example of subject matter classified in this group:

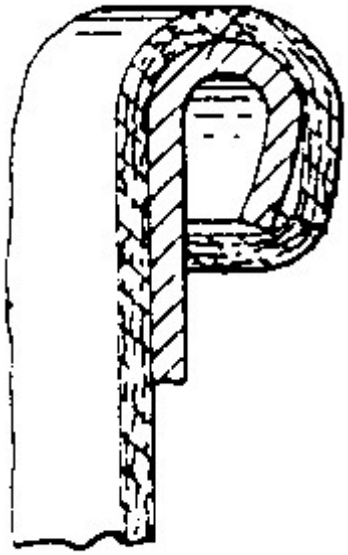

B65D 5/00

Containers of polygonal cross-section, e.g. boxes, cartons, trays, formed by folding or erecting one or more blanks made of paper (pallets B65D 19/00; bundles of articles held together by packaging elements for convenience of storage or transport, e.g. portable segregating carriers for plural receptacles such as beer cans, pop bottles, B65D 71/00; forming foldable or erectable blanks B31B)

References relevant to classification in this group

This subclass/group does not cover:

Holders or wrappers as eating aids for fast food, e.g. hamburgers	A47G 21/001

Informative references

Attention is drawn to the following places, which may be of interest for search:

Bundles of articles held together by packaging elements for convenience of storage or transport, e.g. portable segregating carriers for plural receptacles such as beer cans, pop bottles	B65D 71/00

B65D 5/0005

[N: of variable capacity (in general B65D 21/08)]

References relevant to classification in this group

This subclass/group does not cover:

Collapsible	B65D 5/36

Informative references

Attention is drawn to the following places, which may be of interest for search:

Containers of variable capacity	B65D 21/08

B65D 5/002

[N: having integral corner posts (B65D 5/0045 and B65D 5/0065 take precedence)]

Definition statement

This subclass/group covers:

Illustrative example of subject matter classified in this group:

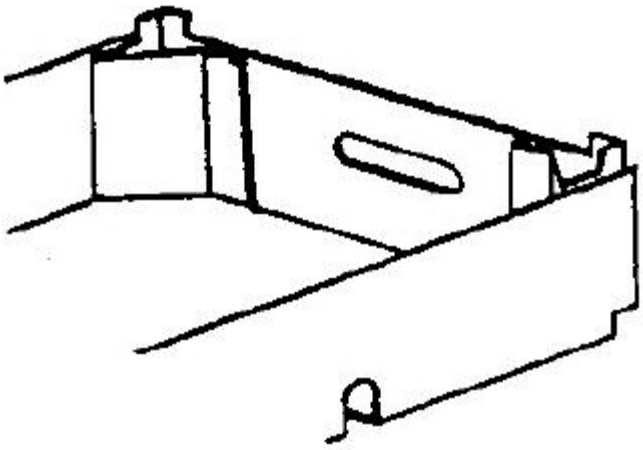

References relevant to classification in this group

This subclass/group does not cover:

Having both integral corner posts and ledges	B65D 5/0045
Separate elements inserted in or attached to integral corner posts or ledges	B65D 5/0065

B65D 5/0025

[N: the corner posts being formed as a prolongation of a doubled-over extension of the side walls]

Definition statement

This subclass/group covers:

Illustrative example of subject matter classified in this group:

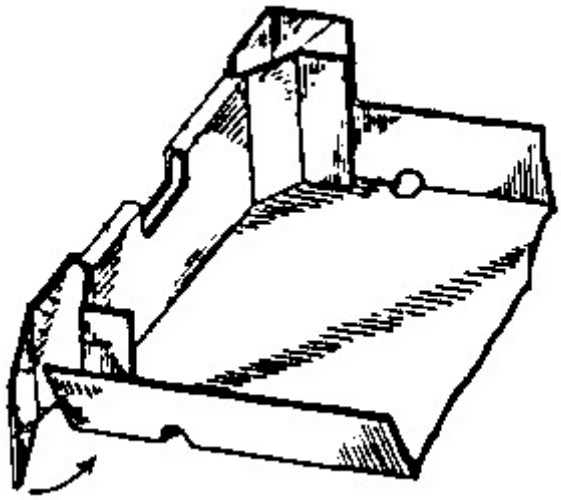

B65D 5/003

[N: having ledges formed by extensions of the side walls (B65D 5/0045 and B65D 5/0065 take precedence)]

Definition statement

This subclass/group covers:

Illustrative example of subject matter classified in this group:

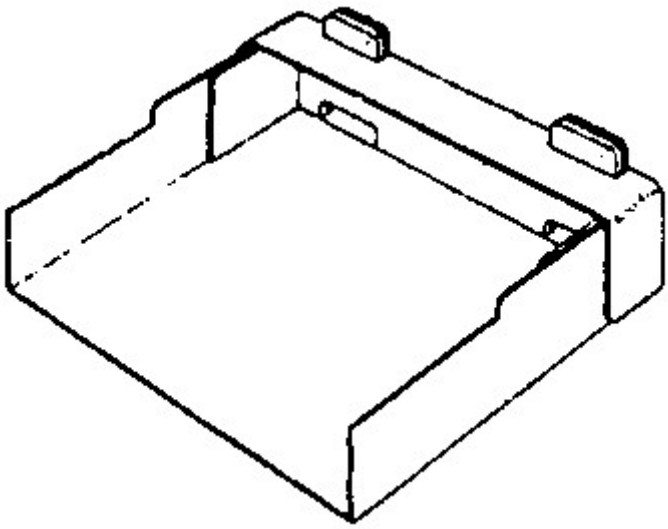

References relevant to classification in this group

This subclass/group does not cover:

Having both integral corner posts and ledges	B65D 5/0045
Separate elements inserted in or attached to integral corner posts or ledges	B65D 5/0065

B65D 5/0035

[N: the ledges being located between side walls and doubled-over extensions (B65D 5/0025 takes precedence)]

Definition statement

This subclass/group covers:

Illustrative example of subject matter classified in this group:

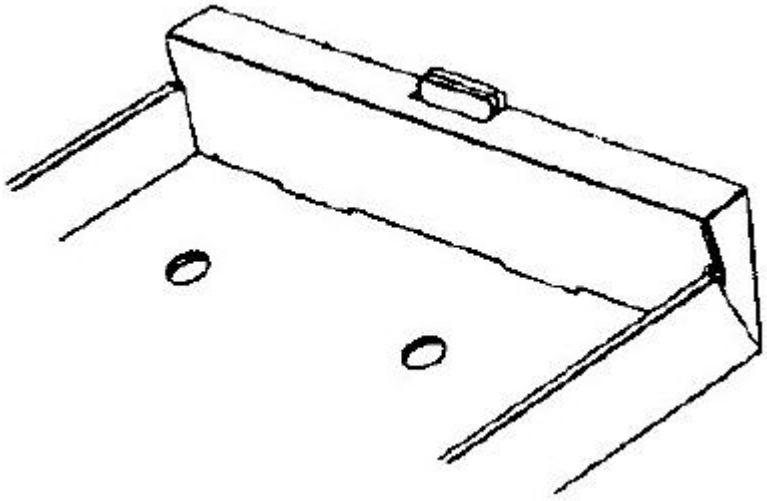

References relevant to classification in this group

This subclass/group does not cover:

The corner posts being formed as a prolongation of a double-over extension of the side walls	B65D 5/0025

B65D 5/004

[N: with separate means inserted between the doubled-over side walls for preventing lateral motion between stacked crates, i.e. the elements themselves not presenting stacking features, e.g. "n" shaped wires]

Definition statement

This subclass/group covers:

Illustrative example of subject matter classified in this group:

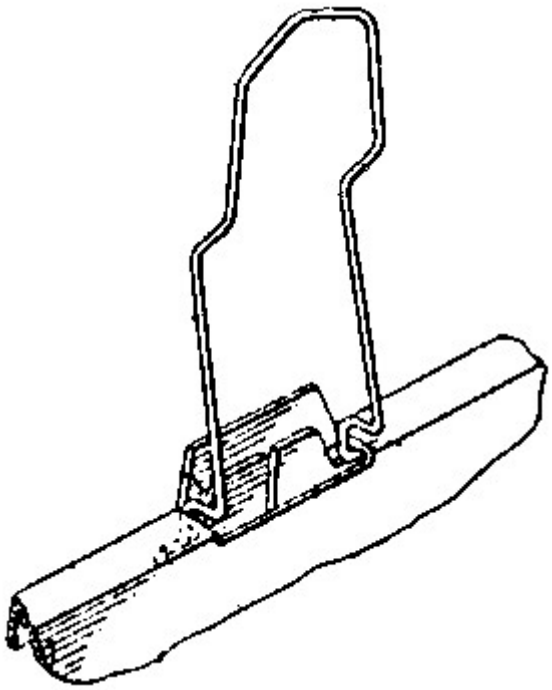

B65D 5/0045

[N: having both integral corner posts and ledges]

Definition statement

This subclass/group covers:
Illustrative example of subject matter classified in this group:

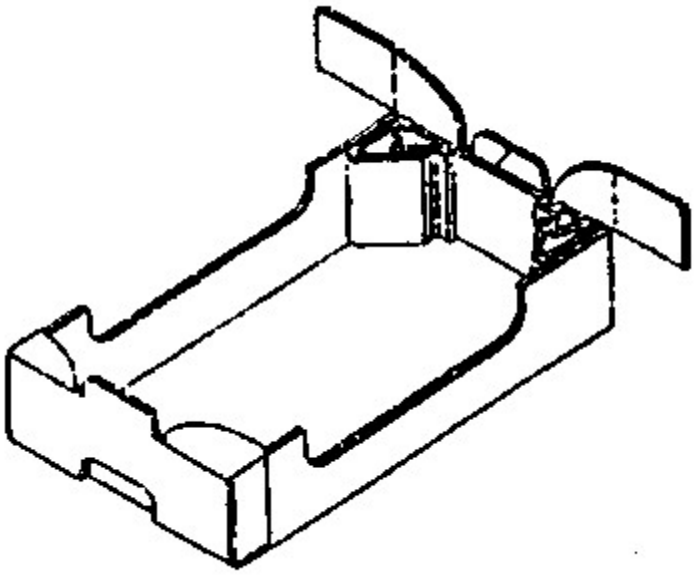

B65D 5/0055

[N: saddling the side walls of the container (B65D 5/006 takes precedence)]

Definition statement

This subclass/group covers:

Illustrative example of subject matter classified in this group:

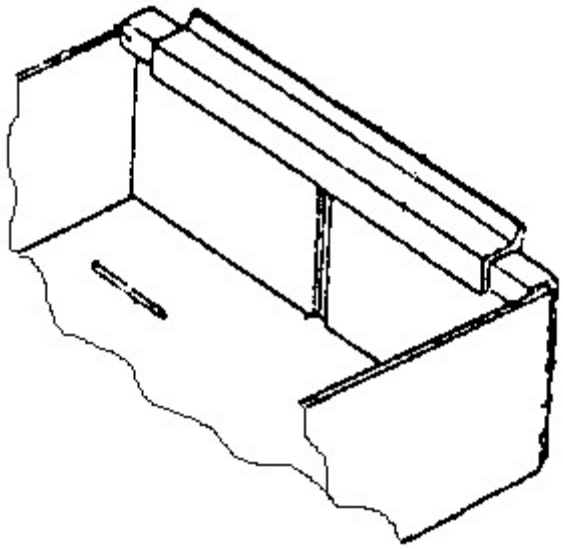

References relevant to classification in this group

This subclass/group does not cover:

Separate corner posts and like elements	B65D 5/006

B65D 5/006

[N: Separate corner posts and like elements (B65D 5/0065 takes precedence)]

Definition statement

This subclass/group covers:

Illustrative example of subject matter classified in this group:

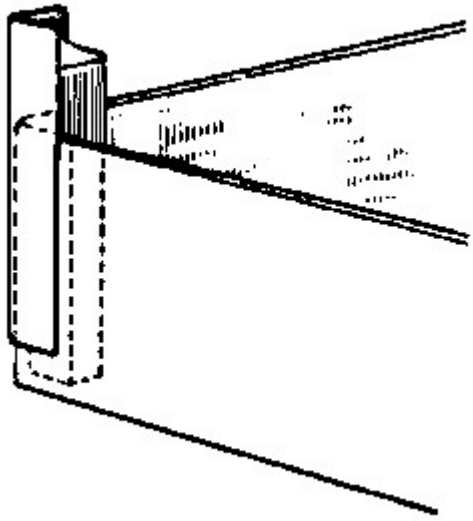

References relevant to classification in this group

This subclass/group does not cover:

Separate elements inserted in or attached to integral corner posts or ledges	B65D 5/0065

B65D 5/0065

[N: Separate elements inserted in or attached to integral corner posts or ledges]

Definition statement

This subclass/group covers:

Illustrative example of subject matter classified in this group:

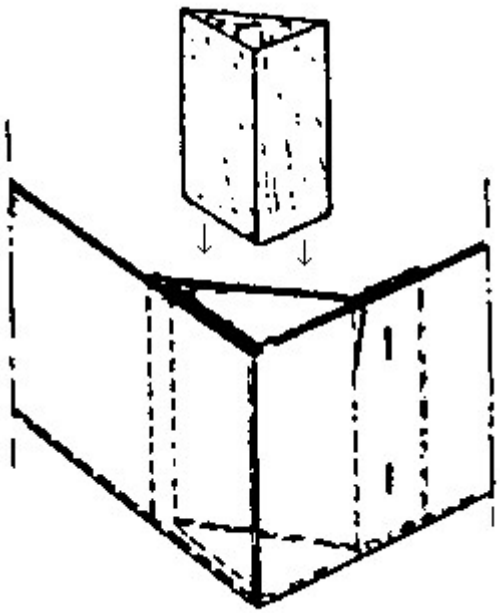

B65D 5/007

[N: Wooden elements affixed to the container blank before or during erection]

Definition statement

This subclass/group covers:

Illustrative example of subject matter classified in this group:

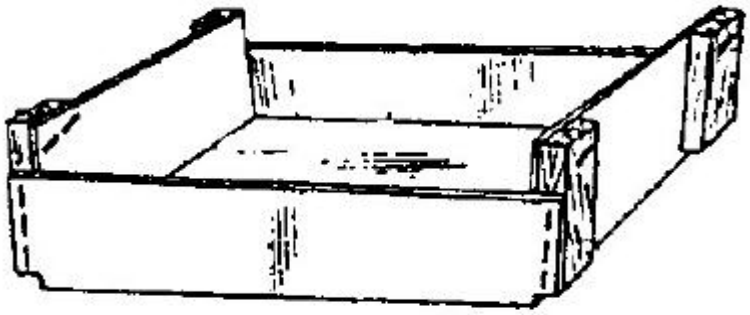

B65D 5/0075

[N: Paper elements affixed to the container blank before or during erection]

Definition statement

This subclass/group covers:
Illustrative example of subject matter classified in this group:

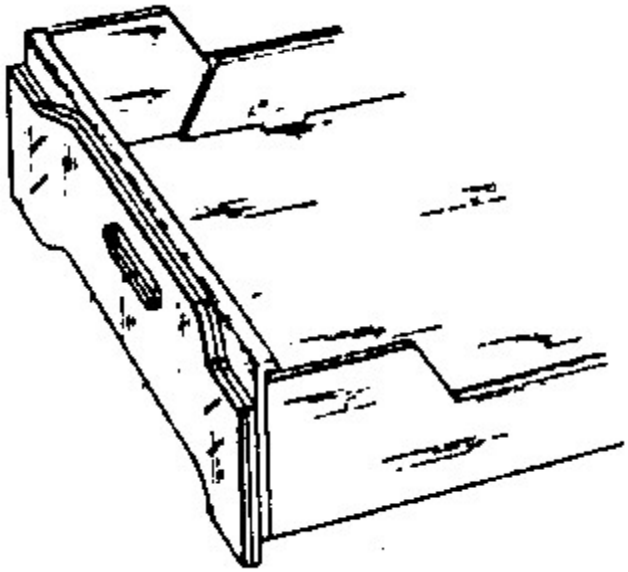

B65D 5/008

[N: the container body having a pyramidal shape]

Definition statement

This subclass/group covers:
Illustrative example of subject matter classified in this group:

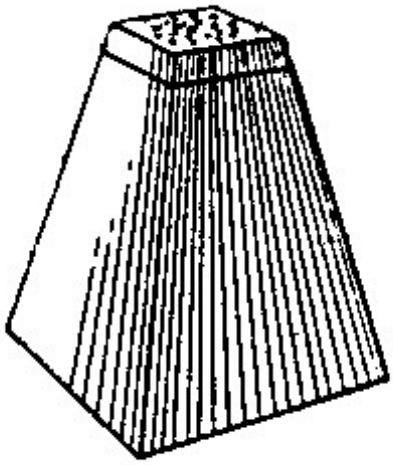

Informative references

Attention is drawn to the following places, which may be of interest for search:

Essentially conical or frusto-conical	B65D 3/06
The tubular body presenting a special shape	B65D 5/029
Tetrahedral packages	B65D 75/50

B65D 5/0085

[N: the container body comprising two mating compartments hinged together (B65D 77/006 takes precedence)]

Definition statement

This subclass/group covers:

Illustrative example of subject matter classified in this group:

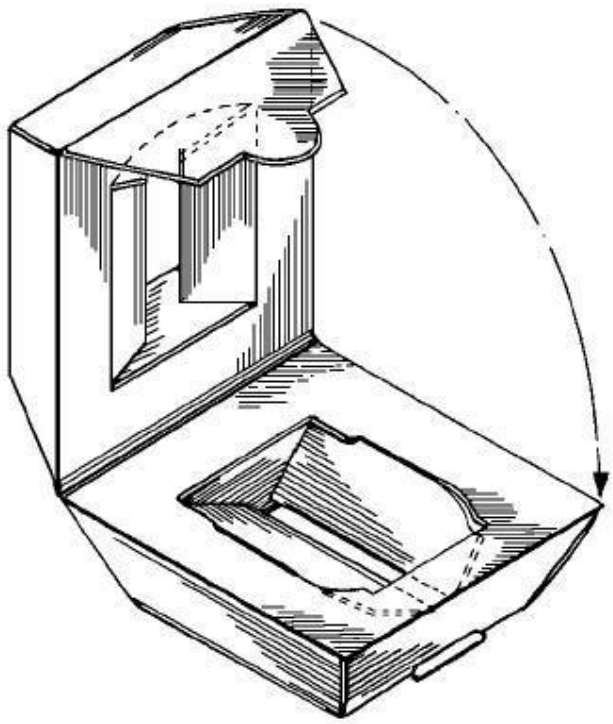

References relevant to classification in this group

This subclass/group does not cover:

Containers simulating a book	B65D 77/006

B65D 5/009

[N: the container body comprising a set of interconnected cells, e.g. hinged one to another]

Definition statement

This subclass/group covers:

Illustrative example of subject matter classified in this group:

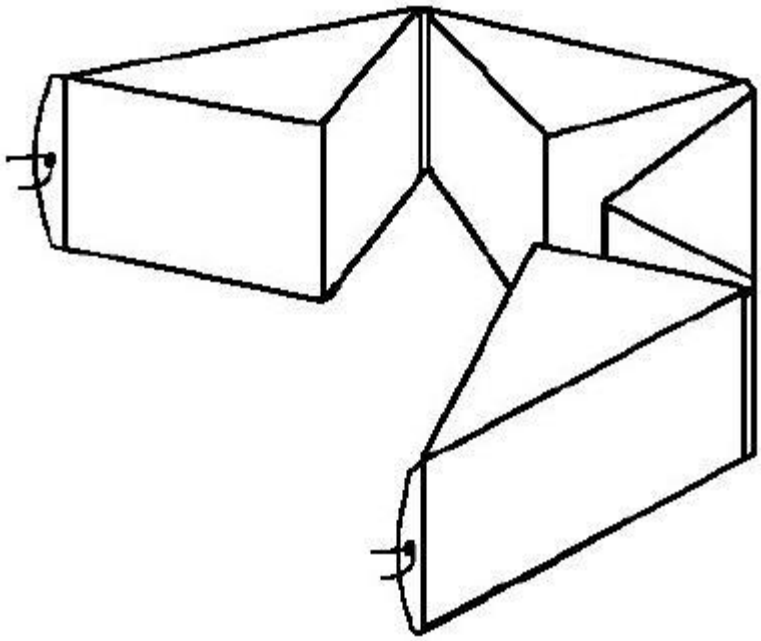

B65D 5/0095

[N: the container body having an L-shaped configuration]

Definition statement

This subclass/group covers:

Illustrative example of subject matter classified in this group:

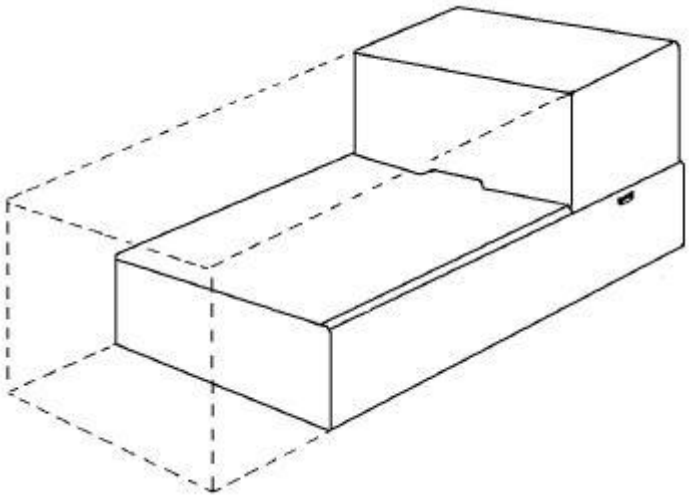

B65D 5/02

by folding or erecting a single blank to form a tubular body with or without subsequent folding operations, or the addition of separate elements, to close the ends of the body (B65D 5/36 takes precedence)

References relevant to classification in this group

This subclass/group does not cover:

L-shaped boxes	B65D 5/0095
Specially constructed to allow collapsing and re-erecting without disengagement of side or bottom connections	B65D 5/36

B65D 5/0209

[N: the tubular body having a curved or partially curved cross-section]

Definition statement

This subclass/group covers:

Illustrative example of subject matter classified in this group:

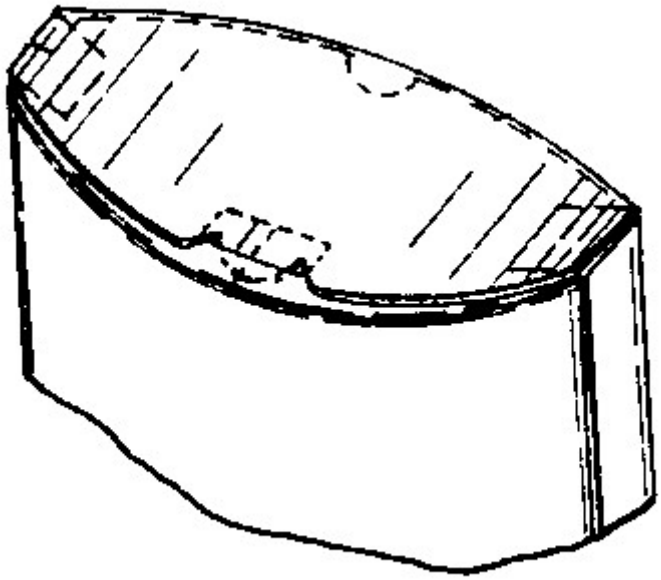

Informative references

Attention is drawn to the following places, which may be of interest for search:

Containers having bodies or peripheral walls of curved or partially curved cross-section made by winding or bending paper without folding along defined lines	B65D 3/00
Having a cross-section of varying shape	B65D 3/08

B65D 5/0218

[N: with end closures having an axially movable end wall; the end wall and body being interconnected by foldable panel-elements]

Definition statement

This subclass/group covers:

Illustrative example of subject matter classified in this group:

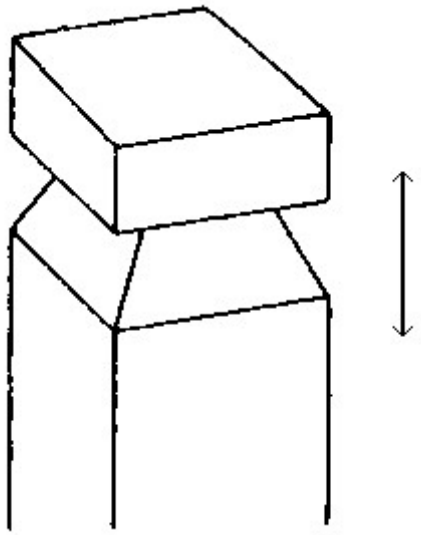

B65D 5/0227

[N: with end closures formed by inward folding of flaps and securing them by heat-sealing, adhesive applied to the flaps or staples (by adhesive tapes B65D 5/0236)]

Definition statement

This subclass/group covers:

Illustrative example of subject matter classified in this group:

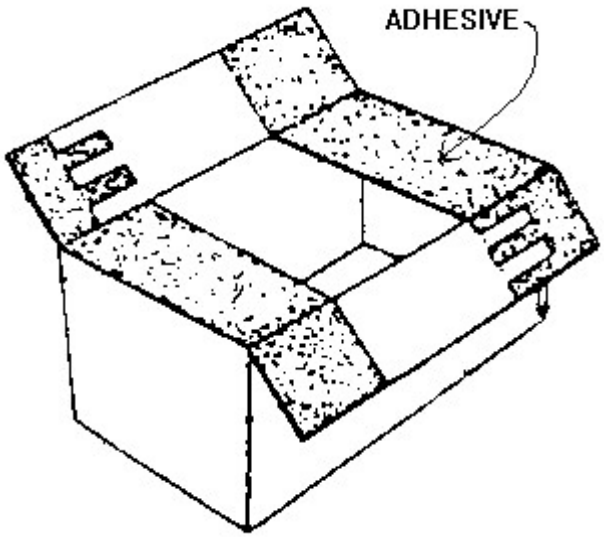

B65D 5/0236

[N: with end closures formed by inward folding of flaps and

securing them by adhesive tapes, labels or the like; for decoration purposes (B65D 5/4245, B65D 5/4262 take precedence)]

Definition statement

This subclass/group covers:

Illustrative example of subject matter classified in this group:

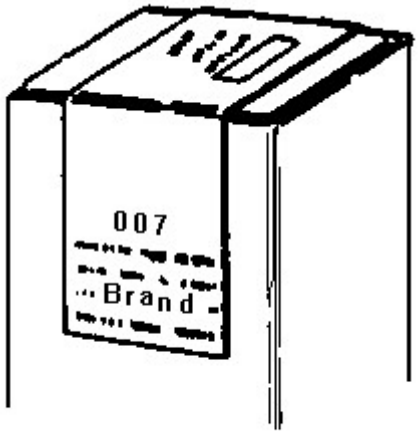

References relevant to classification in this group

This subclass/group does not cover:

Bands covering at least 3 adjacent faces of a container	B65D 5/4245
Bands covering at least 3 adjacent faces of a container provided with a decoration	B65D 5/4262

Informative references

Attention is drawn to the following places, which may be of interest for search:

The lid being held in closed position by application of separate elements	B65D 5/6611

B65D 5/0245

[N: with end closures formed by inward folding of flaps, to form a sunken or hollow end wall, e.g. for the packaging of books (internal supporting elements B65D 5/50)]

Definition statement

This subclass/group covers:

Illustrative example of subject matter classified in this group:

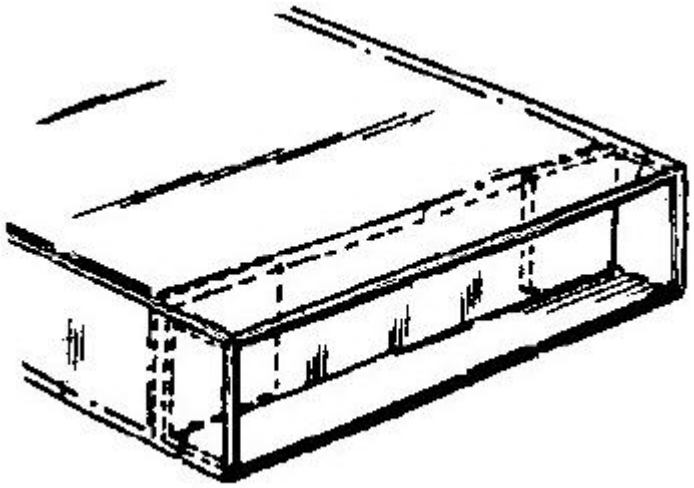

Informative references

Attention is drawn to the following places, which may be of interest for search:

Articles or materials wholly enclosed in single sheets or wrapper blanks	B65D 75/04
In sheets or blanks folded-up around all sides of the contents from a portion on which the contents are placed	B65D 75/14

B65D 5/0254

[N: with end closures formed by inward folding of flaps and securing means of them by means of a tongue integral with one of the flaps]

Definition statement

This subclass/group covers:

Illustrative example of subject matter classified in this group:

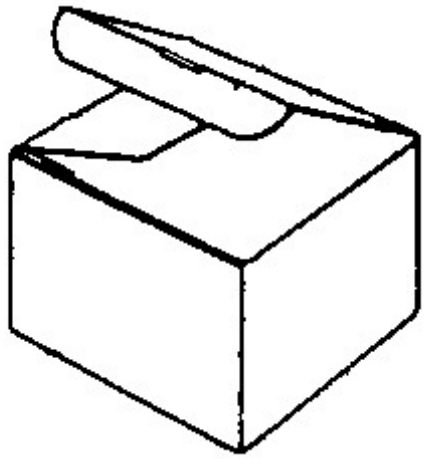

Informative references

Attention is drawn to the following places, which may be of interest for search:

With end closures formed by inward-folding of self-locking flaps hinged to tubular body	B65D 5/10
Formed by folding one or more extensions hinged to the upper edge of a tubular container body	B65D 5/6602

B65D 5/0263

[N: with end closures formed by inward folding of flaps, three of them being formed of a continuous strip, the fourth being a separate flap]

Definition statement

This subclass/group covers:

Illustrative example of subject matter classified in this group:

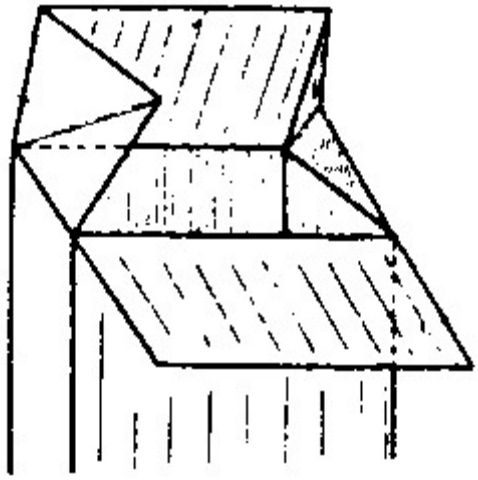

B65D 5/0272

[N: with end closures formed by applying a web on the edge of the body, and subsequent inward folding of flaps]

Definition statement

This subclass/group covers:

Illustrative example of subject matter classified in this group:

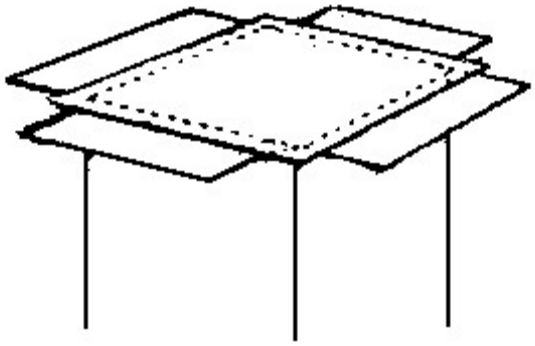

B65D 5/0281

[N: the tubular body presenting double or multiple walls (for thermal insulating purposes B65D 81/3853)]

Definition statement

This subclass/group covers:

Illustrative example of subject matter classified in this group:

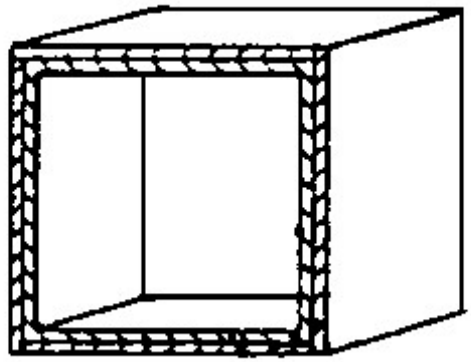

B65D 5/029

[N: the tubular body presenting a special shape (pyramidal B65D 5/008)]

Definition statement

This subclass/group covers:
Illustrative example of subject matter classified in this group:



References relevant to classification in this group

This subclass/group does not cover:

L-shaped boxes	B65D 5/0095

Informative references

Attention is drawn to the following places, which may be of interest for search:

Having a cross-section of varying shape	B65D 3/08
The tubular body having a curved or partially curved cross-section	B65D 5/0209

B65D 5/04

the tubular body having no end closures (shells of drawer-and-shell type containers B65D 5/38)

Definition statement

This subclass/group covers:

Illustrative example of subject matter classified in this group:

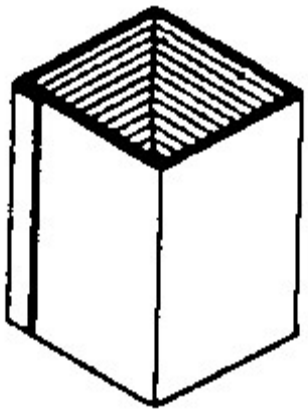

Informative references

Attention is drawn to the following places, which may be of interest for search:

Shell of drawer-and-shell type containers	B65D 5/38

B65D 5/061

[N: Rectangular containers having a body with gusset-flaps folded inwardly beneath the closure flaps]

Definition statement

This subclass/group covers:

Illustrative example of subject matter classified in this group:

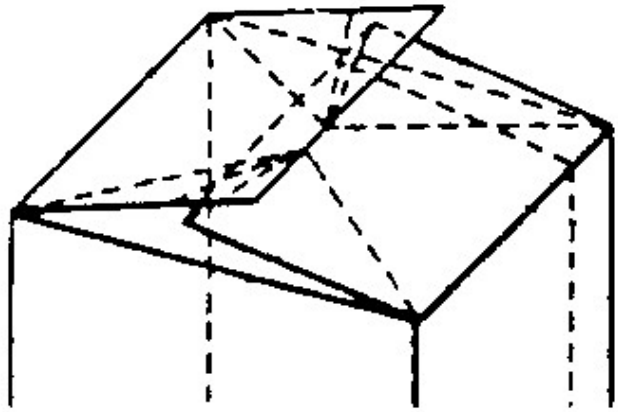

B65D 5/063

[N: with supplemental clamping elements mounted on the container top]

Informative references

Attention is drawn to the following places, which may be of interest for search:

With supplemental clamping elements mounted on the container top	B65D 5/066
With supplemental clamping elements mounted on the fin of the container-top	B65D 5/069

B65D 5/064

[N: Rectangular containers having a body with gusset-flaps folded outwardly or adhered to the side or the top of the container]

Definition statement

This subclass/group covers:

Illustrative example of subject matter classified in this group:

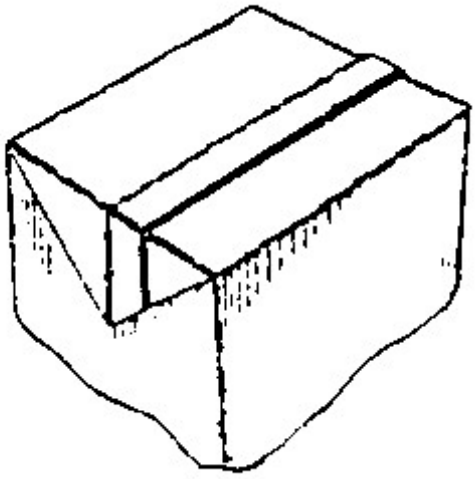

B65D 5/066

[N: with supplemental clamping elements mounted on the container top]

Informative references

Attention is drawn to the following places, which may be of interest for search:

With supplemental clamping elements mounted on the container top	B65D 5/063
With supplemental clamping elements mounted on the fin of the container-top	B65D 5/069

B65D 5/067

[N: Gable-top containers]

Definition statement

This subclass/group covers:

Illustrative example of subject matter classified in this group:

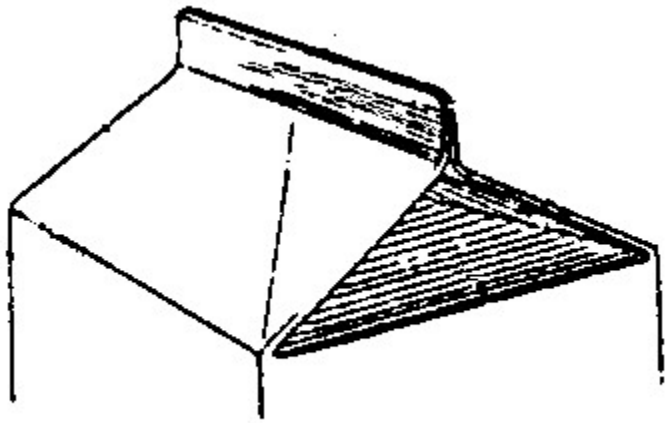

B65D 5/069

[N: with supplemental clamping elements mounted on the fin of the container-top]

Informative references

Attention is drawn to the following places, which may be of interest for search:

Rectangular containers having a body with gusset-flaps folded inwardly beneath the closure flaps with supplemental clamping elements mounted on the container top	B65D 5/063
Rectangular containers having a body with gusset-flaps folded outwardly or adhered to the side or the top of the container with supplemental clamping elements mounted on the container top	B65D 5/066

B65D 5/08

with end closures formed by inward-folding of portions of body, e.g. flaps, interconnected by, or incorporating, gusset folds (by inward-folding of a wall extending continuously around an end of the body and incorporating gusset folds B65D 5/06)

Definition statement

This subclass/group covers:
Illustrative example of subject matter classified in this group:

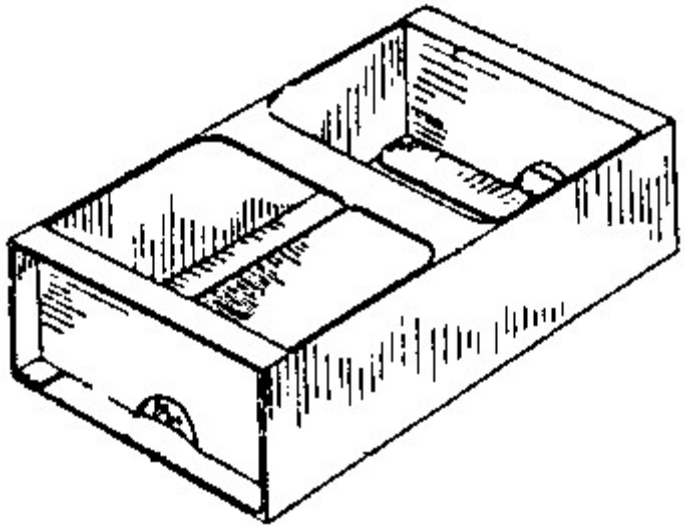

Informative references

Attention is drawn to the following places, which may be of interest for search:

The container body having hollow side-walls	B65D 5/2004
Integral elements for containers having tubular body walls formed by openings in the body walls	B65D 5/5019

B65D 5/10

with end closures formed by inward-folding of self-locking flaps hinged to tubular body

Informative references

Attention is drawn to the following places, which may be of interest for search:

With end closures formed by inward folding of flaps and securing means of them by means of a tongue integral with one of the flaps	B65D 5/0254
Formed by folding inwardly of extensions hinged to the upper or lower edges of the body	B65D 5/5011

Sleeves	B65D 59/04

B65D 5/106

[N: the opening being a slot]

Definition statement

This subclass/group covers:
Illustrative example of subject matter classified in this group:

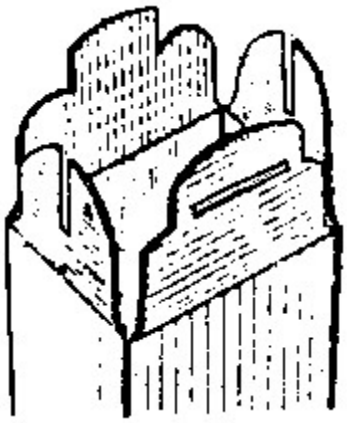

B65D 5/12

with end closures formed separately from tubular body

Definition statement

This subclass/group covers:
Illustrative example of subject matter classified in this group:

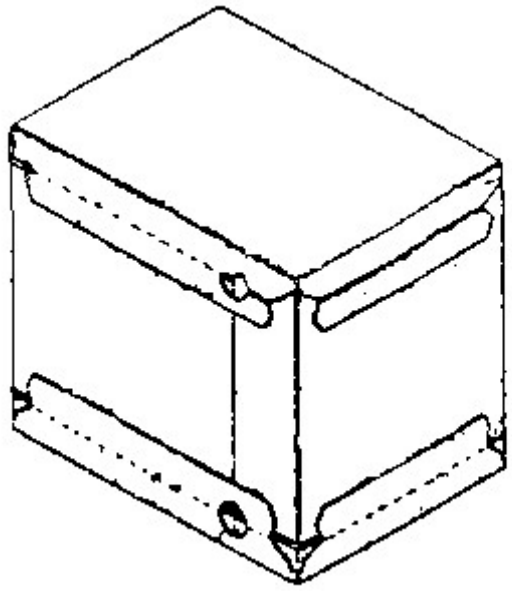

Informative references

Attention is drawn to the following places, which may be of interest for search:

Having bodies formed by folding and interconnecting two or more blanks, each blank forming a body part, whereby each body part comprises at least one outside face of the box, carton or tray	B65D 5/32

B65D 5/14

with inset end closures

Definition statement

This subclass/group covers:

Illustrative example of subject matter classified in this group:

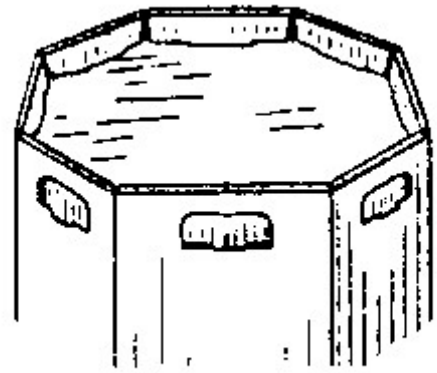

B65D 5/16

the tubular body being formed with an aperture or removable portion arranged to allow removal or insertion of contents through one or more sides (contents-dispensing means B65D 5/72)

Definition statement

This subclass/group covers:

Illustrative example of subject matter classified in this group:

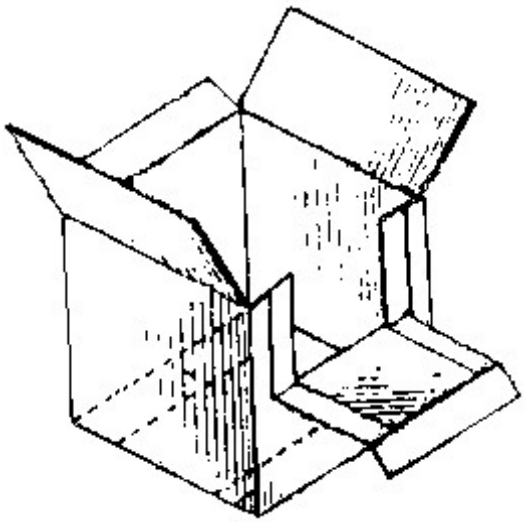

B65D 5/18

by folding a single blank to U-shape to form the base of the container and opposite sides of the body portion, the remaining sides being formed primarily by extensions of one or more of these opposite sides, e.g. flaps hinged thereto

B65D 5/36 takes precedence)

References relevant to classification in this group

This subclass/group does not cover:

Bags	B65D 31/005
Specially constructed to allow collapsing and re-erecting without disengagement of side or bottom connections	B65D 5/36

B65D 5/20

by folding-up portions connected to a central panel from all sides to form a container body, e.g. of tray-like form (B65D 5/36 takes precedence)

References relevant to classification in this group

This subclass/group does not cover:

Specially constructed to allow collapsing and re-erecting without disengagement of side or bottom connections	B65D 5/36

B65D 5/2004

[N: the container body having hollow side-walls]

Informative references

Attention is drawn to the following places, which may be of interest for search:

With end closures formed by inward-folding of portions of body	B65D 5/08
Racks having upstanding ridges formed by folds, and provided with slits or recesses	B65D 5/504

B65D 5/2009

[N: all formed by folding extensions of the side walls]

Definition statement

This subclass/group covers:
Illustrative example of subject matter classified in this group:

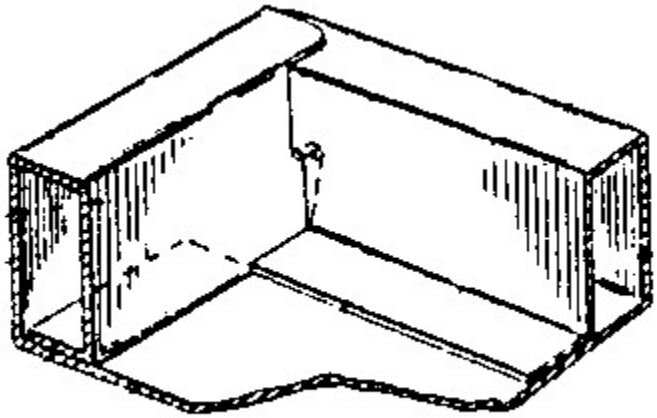

References relevant to classification in this group

This subclass/group does not cover:

Combined with hollow side-walls formed by inwardly cut portions of one body panel	B65D 5/2004

B65D 5/2014

[N: the central panel having a non rectangular shape]

Definition statement

This subclass/group covers:
Illustrative example of subject matter classified in this group:

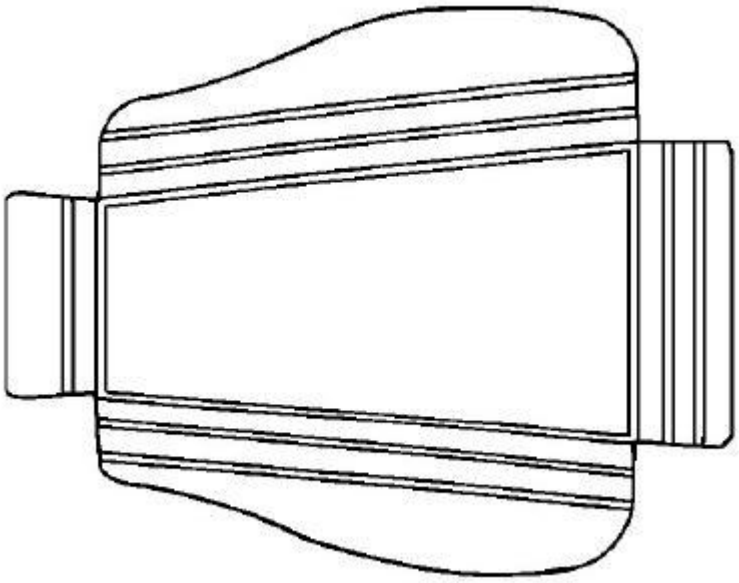

References relevant to classification in this group

This subclass/group does not cover:

Triangular	B65D 5/2042
Trapezoidal	B65D 5/2047

B65D 5/2019

[N: with at least partially curved edges or the like]

Definition statement

This subclass/group covers:
Illustrative example of subject matter classified in this group:

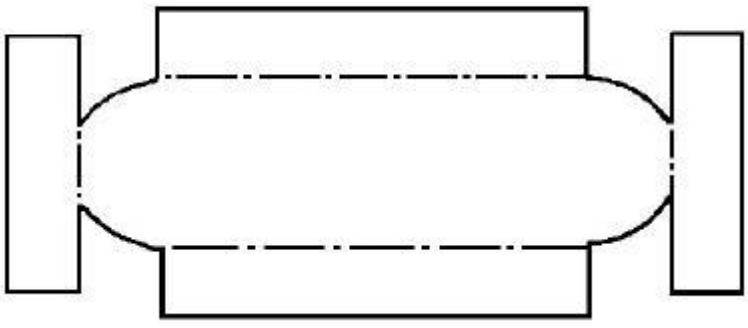

B65D 5/2023

[N: the folded-up portions being folded along non-rectilinear fold-lines]

Definition statement

This subclass/group covers:

Illustrative example of subject matter classified in this group:

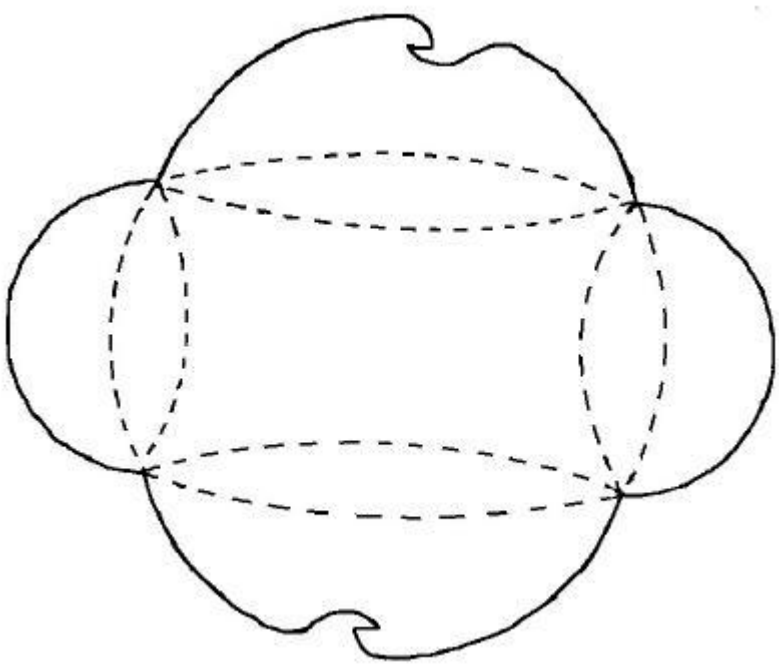

B65D 5/2028

[N: triangular]

Definition statement

This subclass/group covers:

Illustrative example of subject matter classified in this group:

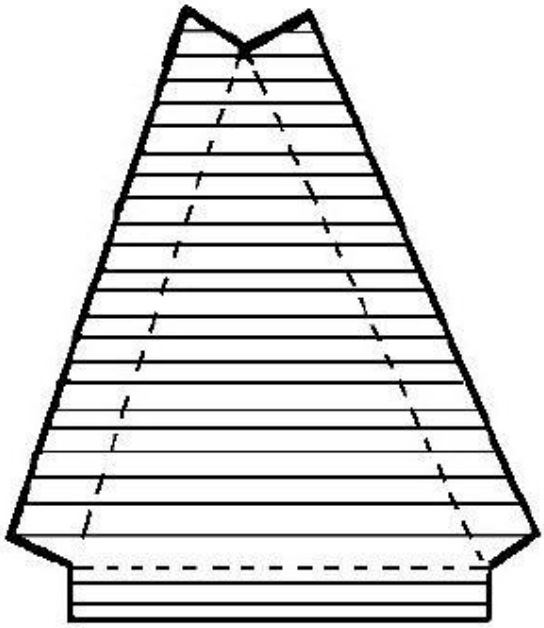

B65D 5/2033

[N: polygonal having more than four sides, e.g. hexagonal, octagonal]

Definition statement

This subclass/group covers:

Illustrative example of subject matter classified in this group:

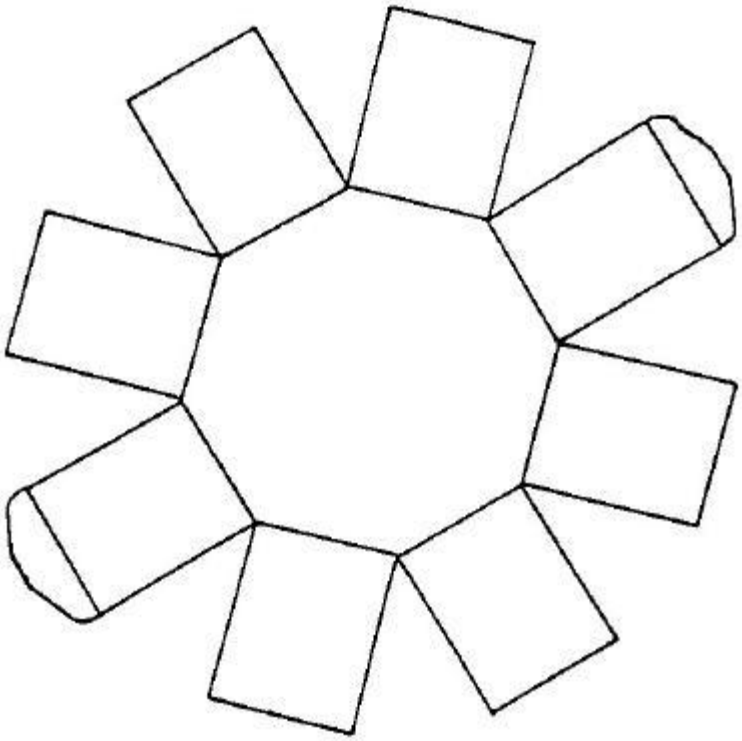

B65D 5/2038

[N: at least two opposed folded-up portions having a non-rectangular shape]

Definition statement

This subclass/group covers:

Illustrative example of subject matter classified in this group:

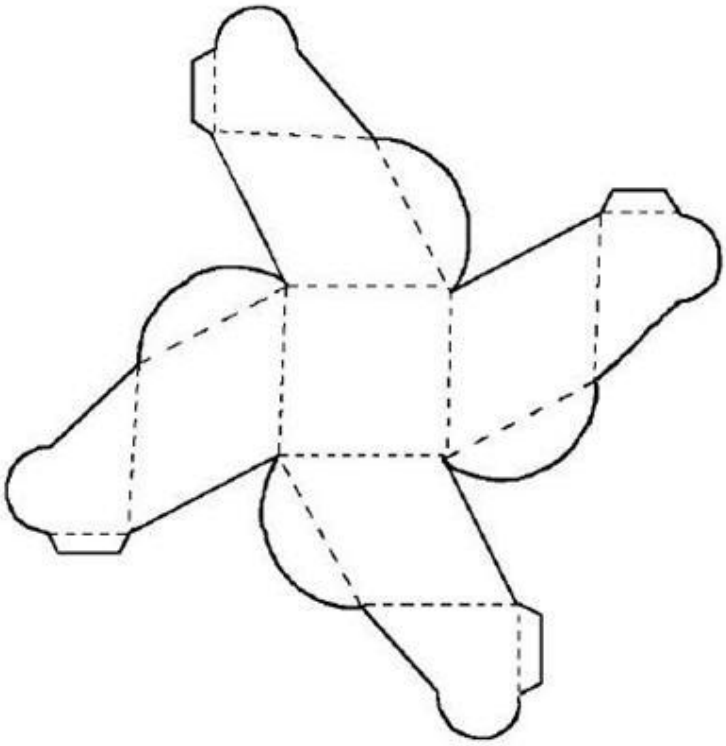

B65D 5/2042

[N: triangular]

Definition statement

This subclass/group covers:
Illustrative example of subject matter classified in this group:

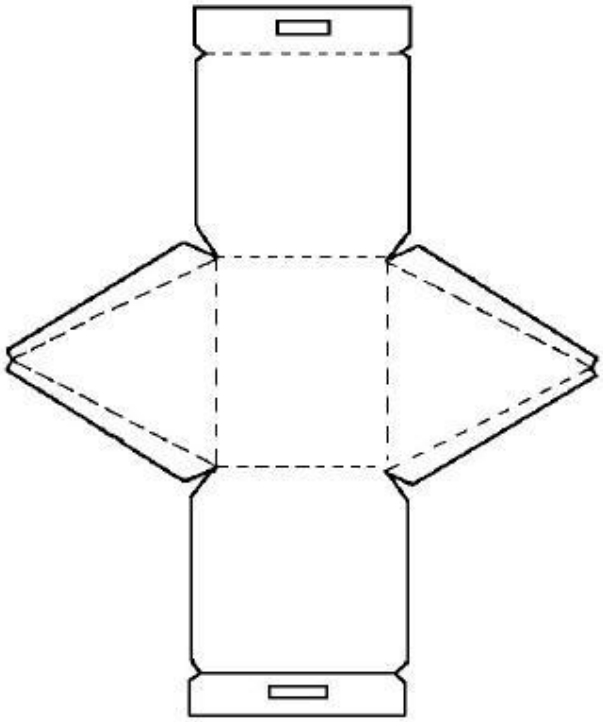

B65D 5/2047

[N: trapezoidal, e.g. to form a body with diverging side walls (B65D 5/2033 takes precedence)] [N9906]

Definition statement

This subclass/group covers:

Illustrative example of subject matter classified in this group:

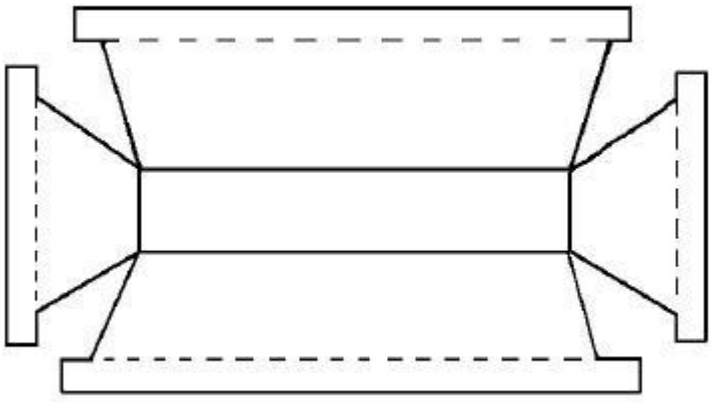

References relevant to classification in this group

This subclass/group does not cover:

Polygonal having more than four sides	B65D 5/2033

B65D 5/2052

[N: characterised by integral closure-flaps]

Informative references

Attention is drawn to the following places, which may be of interest for search:

Articles or materials wholly enclosed in sheets or blanks folded-up around all sides of the contents from a portion on which the contents are placed	B65D 75/14

B65D 5/2057

[N: Inter-engaging self-locking flaps (B65D 5/4254 takes precedence)]

Definition statement

This subclass/group covers:

Illustrative example of subject matter classified in this group:

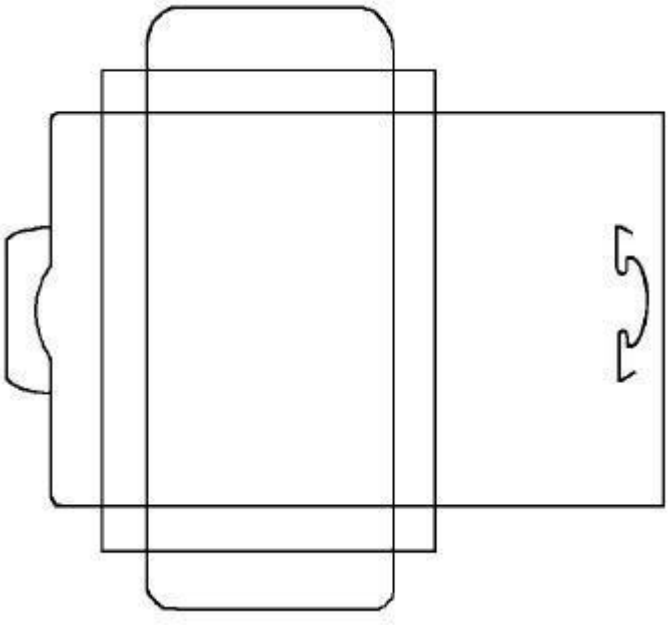

References relevant to classification in this group

This subclass/group does not cover:

Decoration elements formed by two or mating closure panels	B65D 5/4254

B65D 5/2061

[N: of triangular shape]

Definition statement

This subclass/group covers:

Illustrative example of subject matter classified in this group:

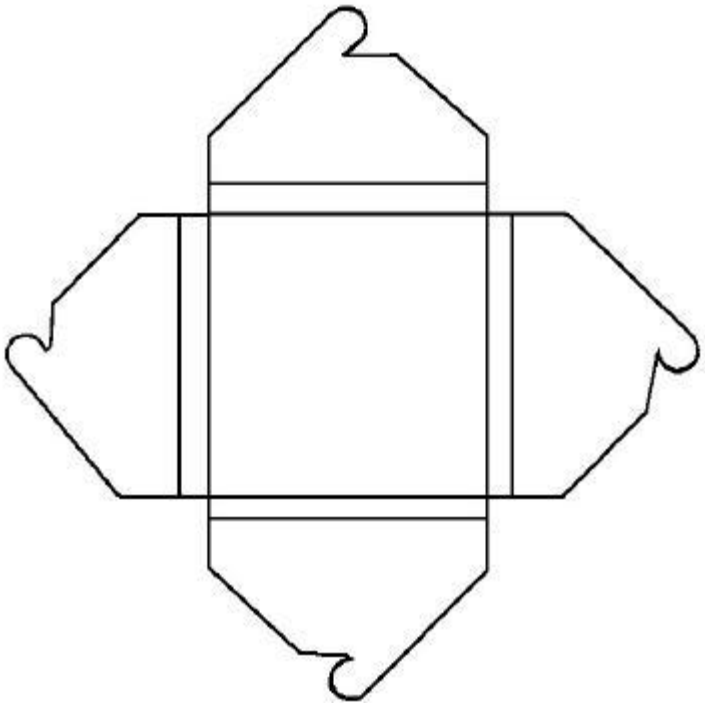

References relevant to classification in this group

This subclass/group does not cover:

Combined with handles	B65D 5/46136

B65D 5/2066

[N: Cooperating flaps fixed together by separate mechanical elements, e.g. staples, clips, straps, labels, tape]

Definition statement

This subclass/group covers:

Illustrative example of subject matter classified in this group:

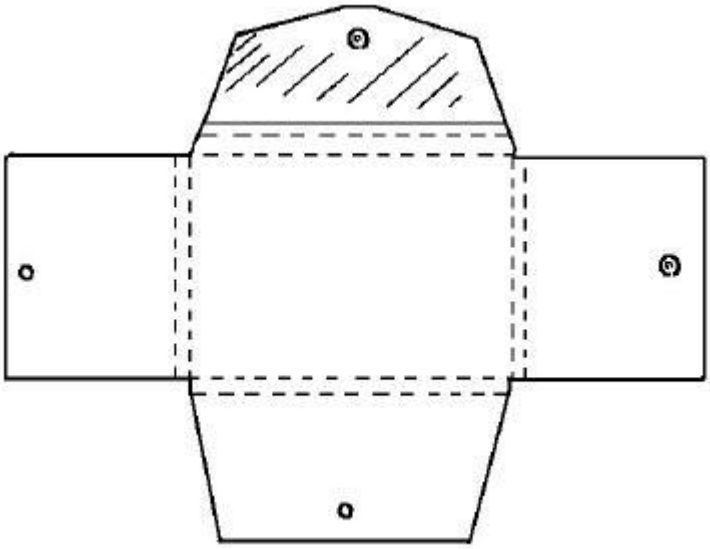

B65D 5/2071

[N: of triangular shape]

Definition statement

This subclass/group covers:

Illustrative example of subject matter classified in this group:

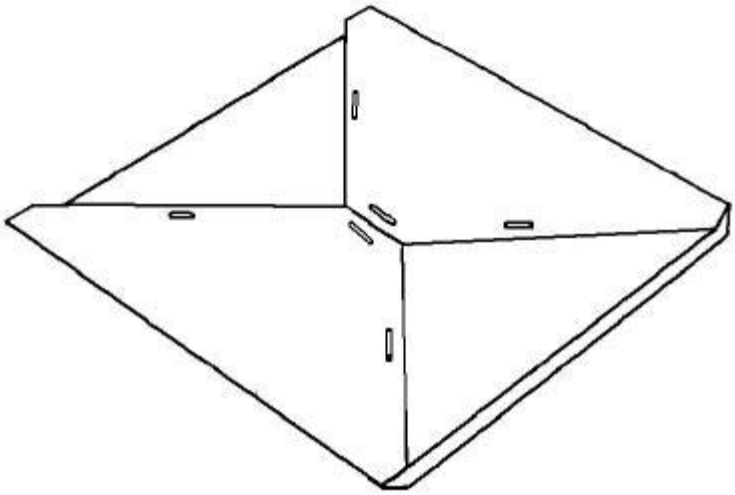

B65D 5/2076

[N: Cooperating flaps glued together]

Definition statement

This subclass/group covers:
Illustrative example of subject matter classified in this group:

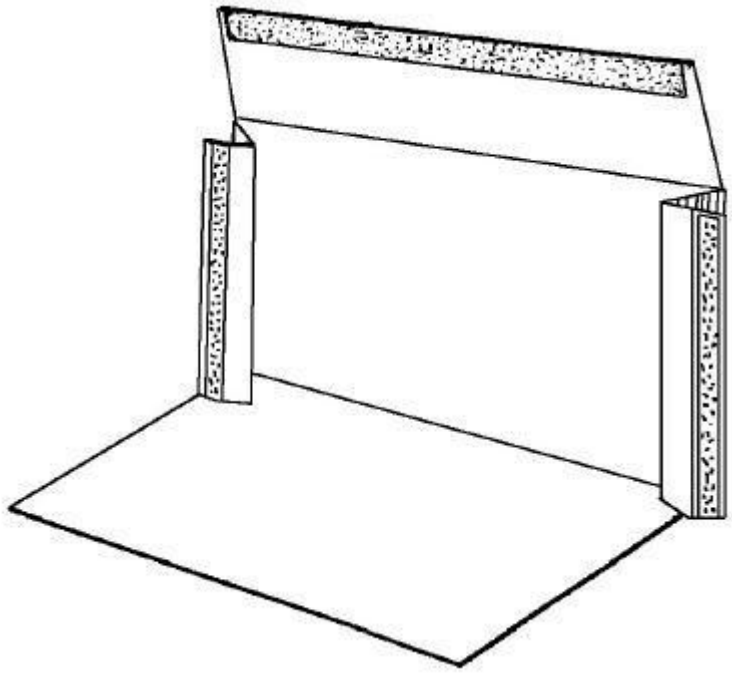

B65D 5/208

[N: of triangular shape]

Definition statement

This subclass/group covers:
Illustrative example of subject matter classified in this group:

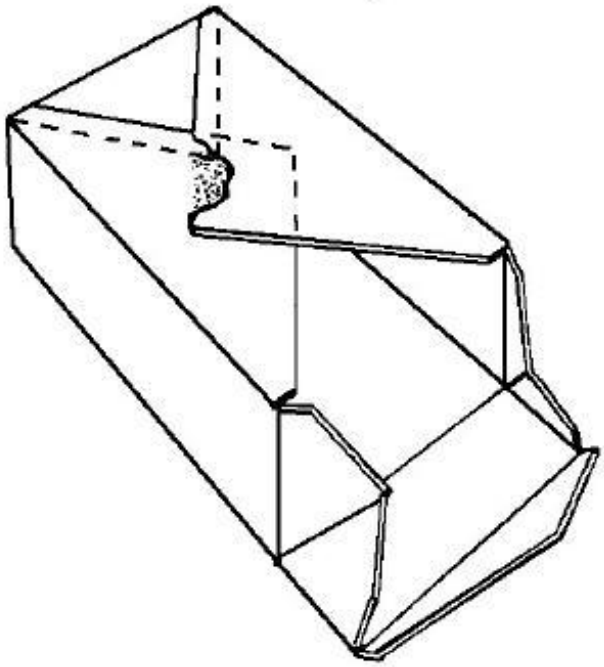

B65D 5/2085

[N: the central panel having incisions defining foldable flaps hinged to its edges]

Definition statement

This subclass/group covers:

Illustrative example of subject matter classified in this group:

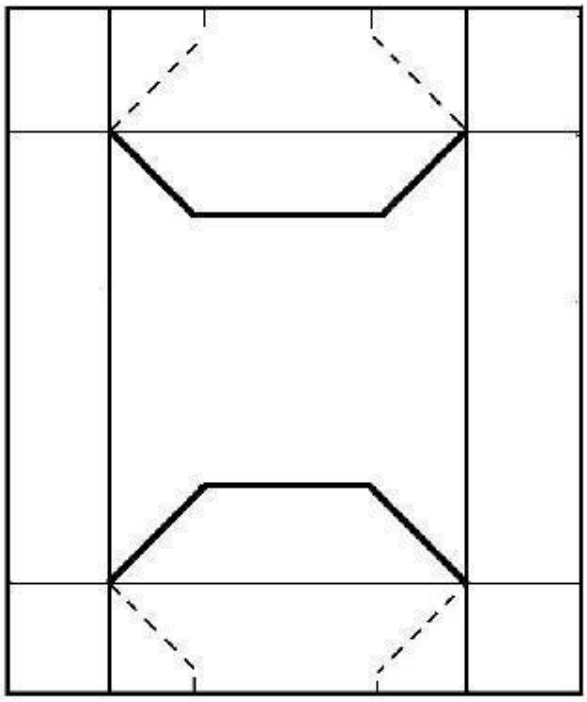

B65D 5/209

[N: the adjacent edges of folded-up portions being joined by moulding seams in situ]

Definition statement

This subclass/group covers:

Illustrative example of subject matter classified in this group:

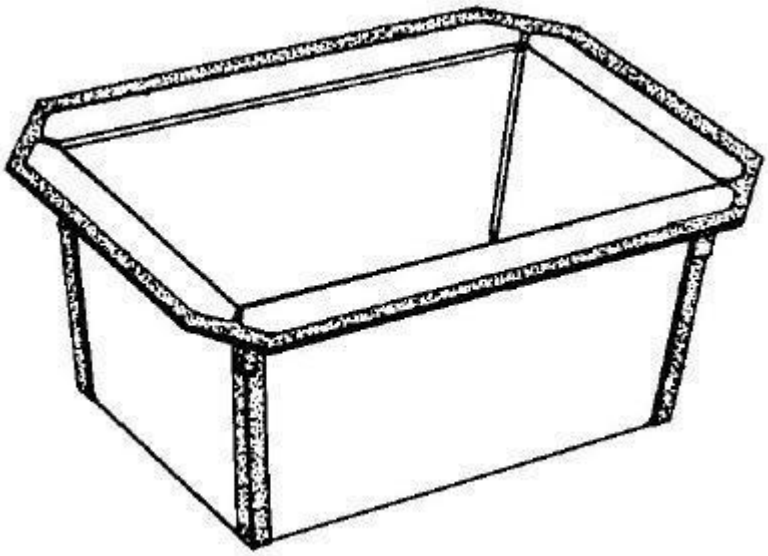

Informative references

Attention is drawn to the following places, which may be of interest for search:

Joining juxtaposed parts of a single article	B29C 45/14475

B65D 5/2095

[N: a part of the folded-up portions defining an inwardly folded ledge at the edges of the central panel]

Definition statement

This subclass/group covers:

Illustrative example of subject matter classified in this group:

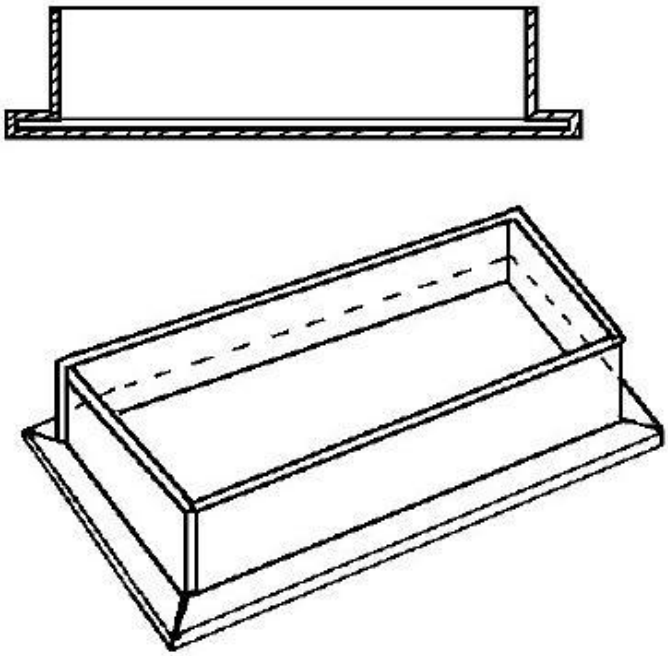

B65D 5/22

held erect by extensions of one or more sides being doubled-over to enclose extensions of adjacent sides

Definition statement

This subclass/group covers:

Illustrative example of subject matter classified in this group:

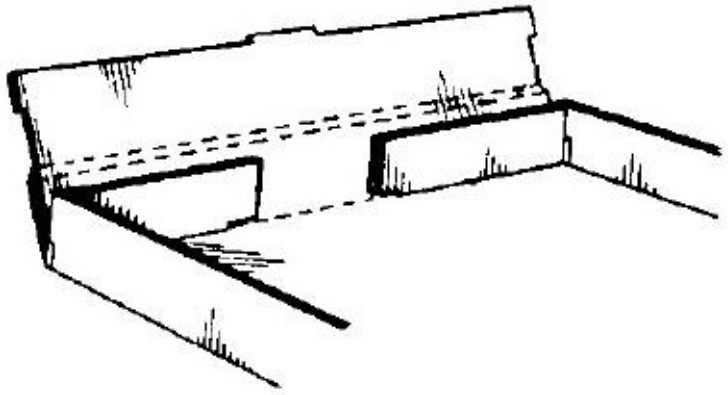

References relevant to classification in this group

This subclass/group does not cover:

The extensions of one or more sides being doubled-over to enclose extensions of adjacent sides	B65D 5/365

B65D 5/24

with adjacent sides interconnected by gusset folds

Definition statement

This subclass/group covers:

Illustrative example of subject matter classified in this group:

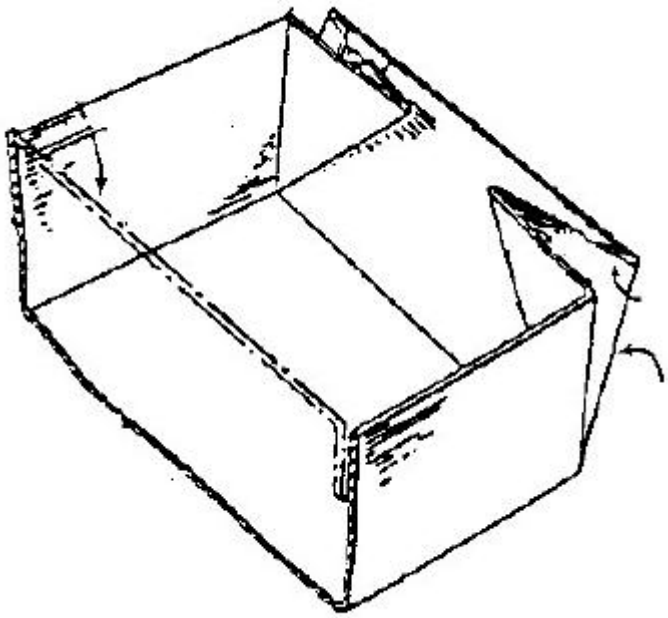

References relevant to classification in this group

This subclass/group does not cover:

The adjacent sides being interconnected by gusset folds	B65D 5/3657
The container being formed by folding-up portions connected to a central panel from all sides, adjacent sides being interconnected by gusset folds and the container being maintained in erected condition by means of the separate connectors coacting with the gusset folds	B65D 5/4287

B65D 5/241

[N: and the gussets folds connected to the inside of the container body (B65D 5/247 and B65D 5/248 take precedence)]

Definition statement

This subclass/group covers:

Illustrative example of subject matter classified in this group:

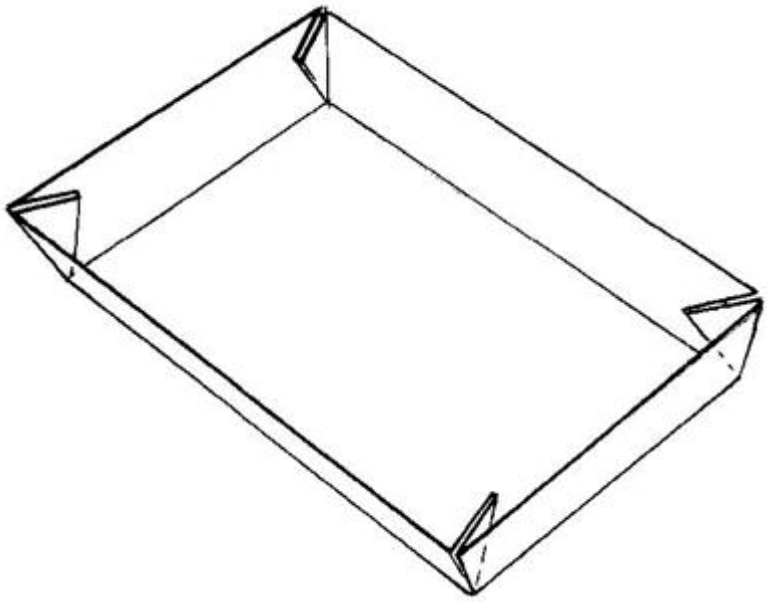

References relevant to classification in this group

This subclass/group does not cover:

Being maintained in erected condition by integral mechanical locking means formed on, or coacting with, the gusset folds	B65D 5/247
At least one side being extended and doubled-over to enclose the adjacent gusset flaps	B65D 5/248

B65D 5/242

[N: the gussets folds comprising more than two gusset panels]

Definition statement

This subclass/group covers:

Illustrative example of subject matter classified in this group:

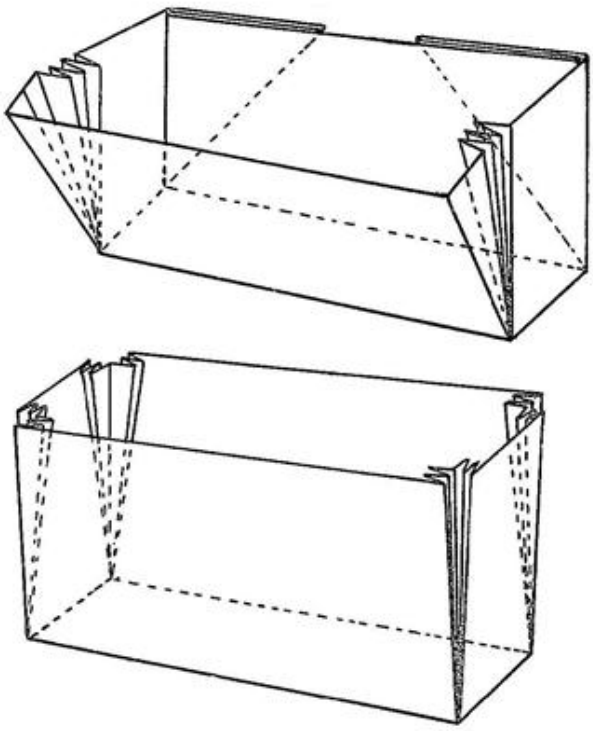

B65D 5/243

[N: the container body comprising a continuous rim or flange]

Definition statement

This subclass/group covers:
Illustrative example of subject matter classified in this group:

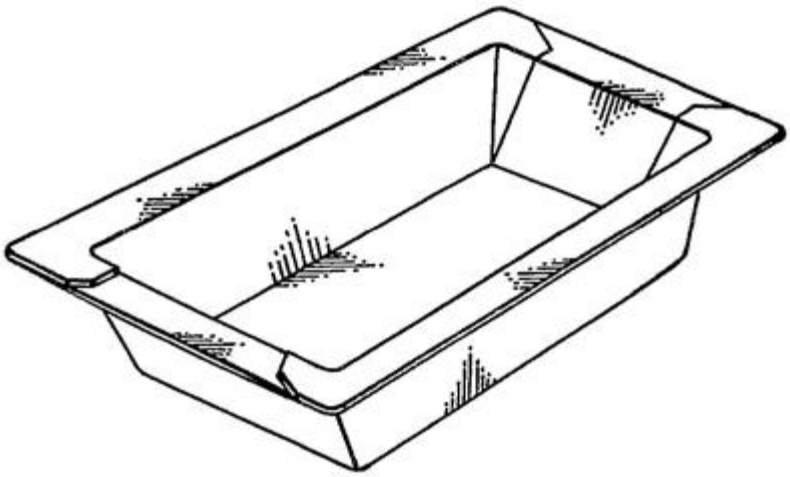

B65D 5/244

[N: and the gussets folds connected to the outside of the container body (B65D 5/247, B65D 5/248 take precedence)]

Definition statement

This subclass/group covers:

Illustrative example of subject matter classified in this group:

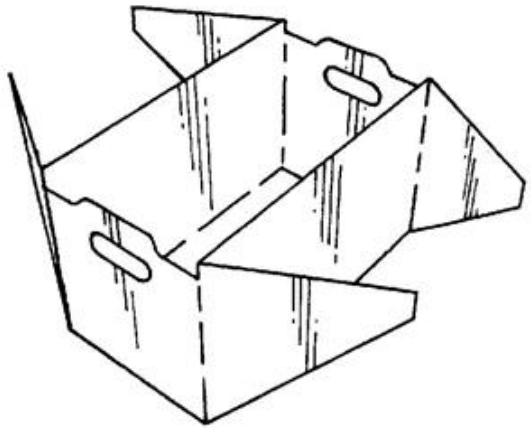

References relevant to classification in this group

This subclass/group does not cover:

Being maintained in erected condition by integral mechanical locking means formed on, or coacting with, the gusset folds	B65D 5/247
At least one side being extended and doubled-over to enclose the adjacent gusset flaps	B65D 5/248

B65D 5/245

[N: the gussets folds comprising more than two gusset panels]

Definition statement

This subclass/group covers:

Illustrative example of subject matter classified in this group:

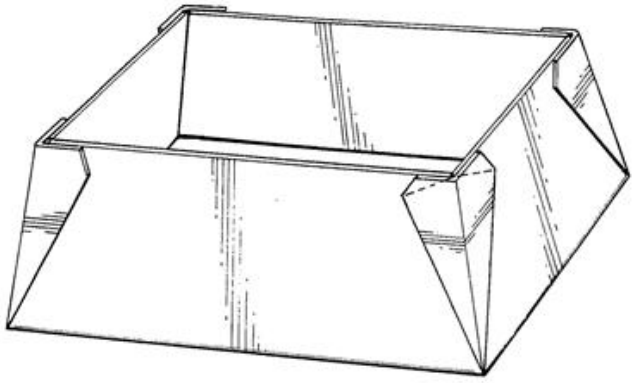

B65D 5/246

[N: the container body comprising a continuous rim or flange]

Definition statement

This subclass/group covers:

Illustrative example of subject matter classified in this group:

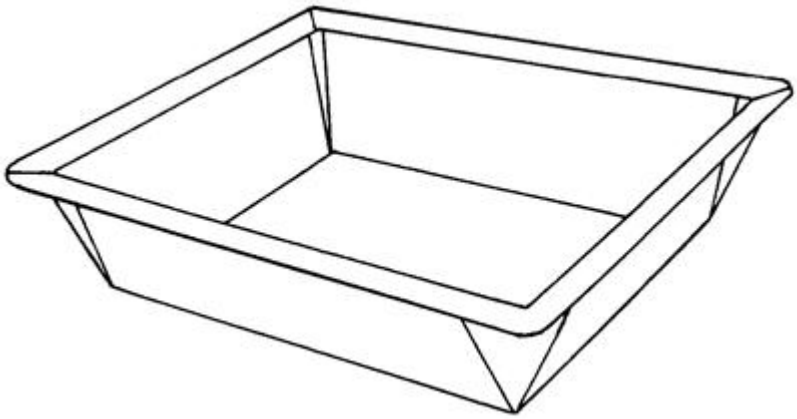

B65D 5/247

[N: and being maintained in erected condition by integral mechanical locking means formed on, or coacting with, the gusset folds, e.g. locking tabs, tongue and slit (B65D5/24B takes precedence)]

Definition statement

This subclass/group covers:

Illustrative example of subject matter classified in this group:

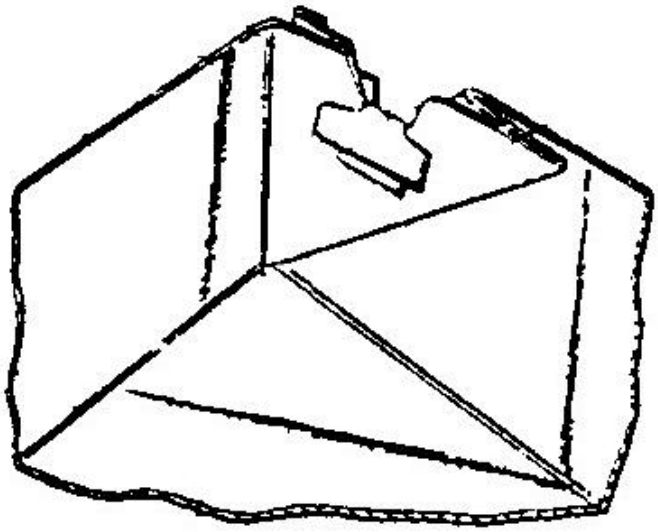

B65D 5/248

[N: and at least one side being extended and doubled-over to enclose the adjacent gusset flaps]

Definition statement

This subclass/group covers:

Illustrative example of subject matter classified in this group:

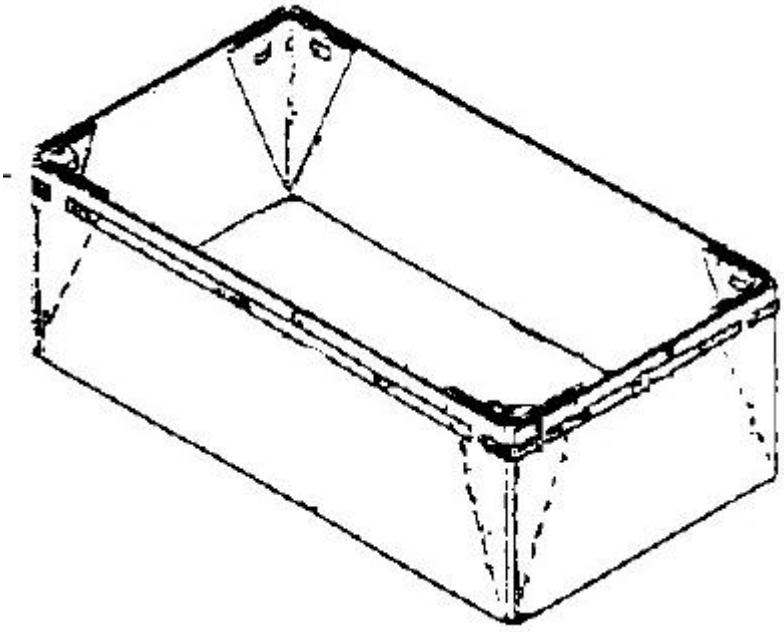

References relevant to classification in this group

This subclass/group does not cover:

Side walls having a substantial thickness for stacking purposes	B65D 5/0035
Hollow side walls	B65D 5/0035, B65D 5/2004

B65D 5/26

with extensions of opposite sides mutually interlocking to lie against other sides

Definition statement

This subclass/group covers:

Illustrative example of subject matter classified in this group:

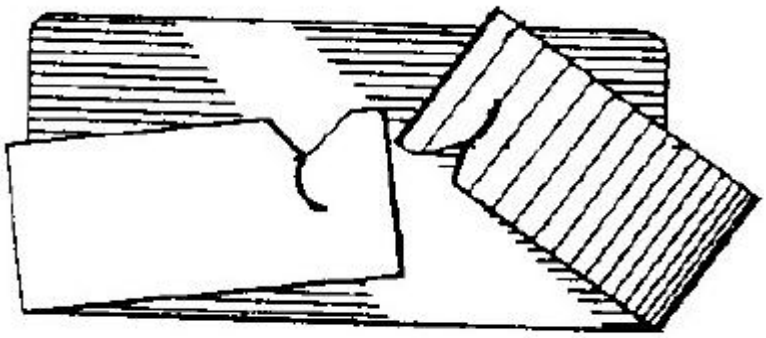

B65D 5/28

with extensions of sides permanently secured to adjacent sides, with sides permanently secured together by adhesive strips, or with sides held in place solely by rigidity of material

Definition statement

This subclass/group covers:

Illustrative example of subject matter classified in this group:

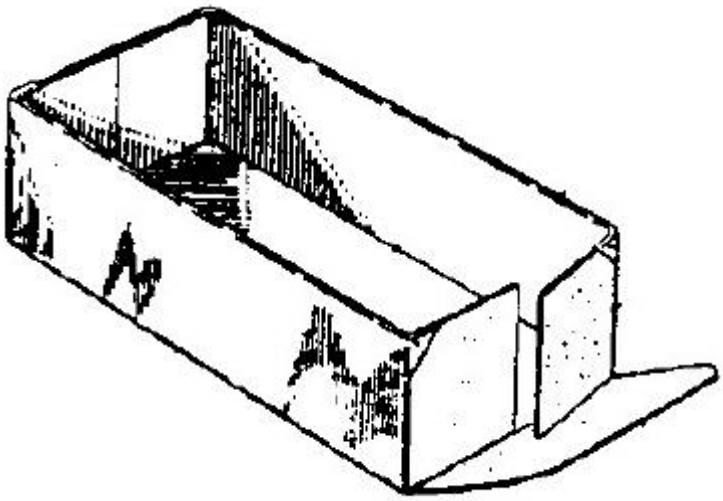

B65D 5/30

with tongue-and-slot or like connections between sides and extensions of other sides

Definition statement

This subclass/group covers:

Illustrative example of subject matter classified in this group:

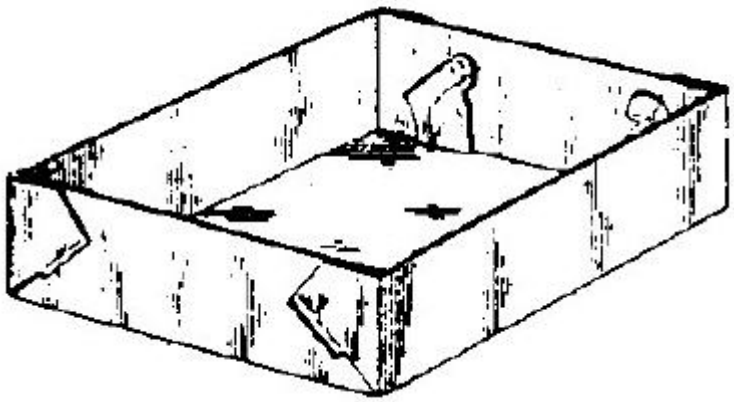

Informative references

Attention is drawn to the following places, which may be of interest for search:

Joints, seams, leakproof joints or corners, special connections between panels	B65D 5/4279

B65D 5/302

[N: combined with a slot provided in an adjacent side wall]

Definition statement

This subclass/group covers:

Illustrative example of subject matter classified in this group:

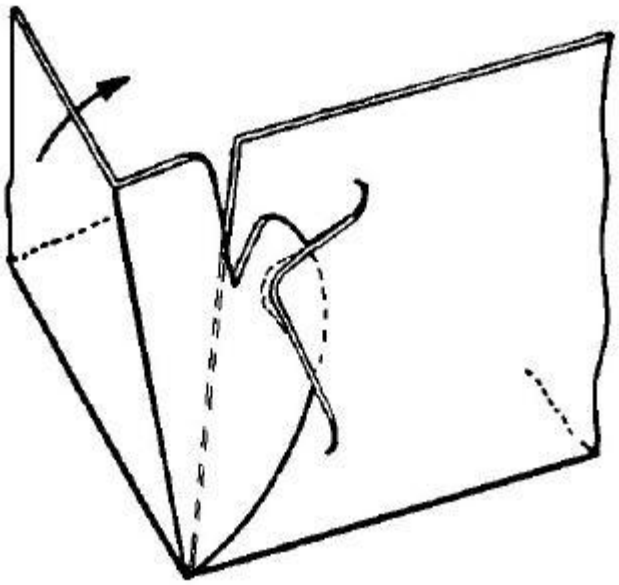

B65D 5/304

[N: the tongue being folded over after being introduced in the slot]

Definition statement

This subclass/group covers:

Illustrative example of subject matter classified in this group:

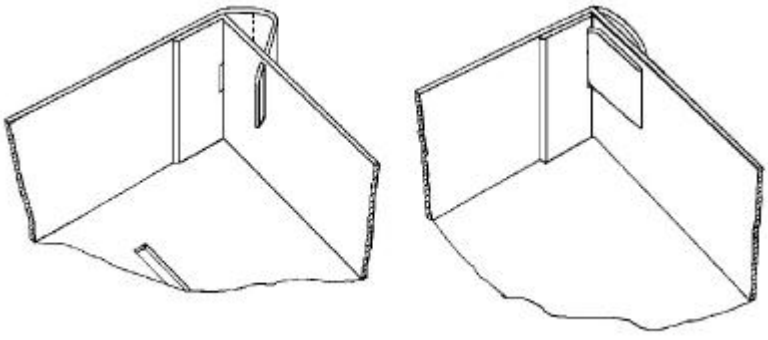

B65D 5/305

[N: combined with a slot provided at the fold line between an adjacent side wall and a lateral extension thereof]

Definition statement

This subclass/group covers:

Illustrative example of subject matter classified in this group:

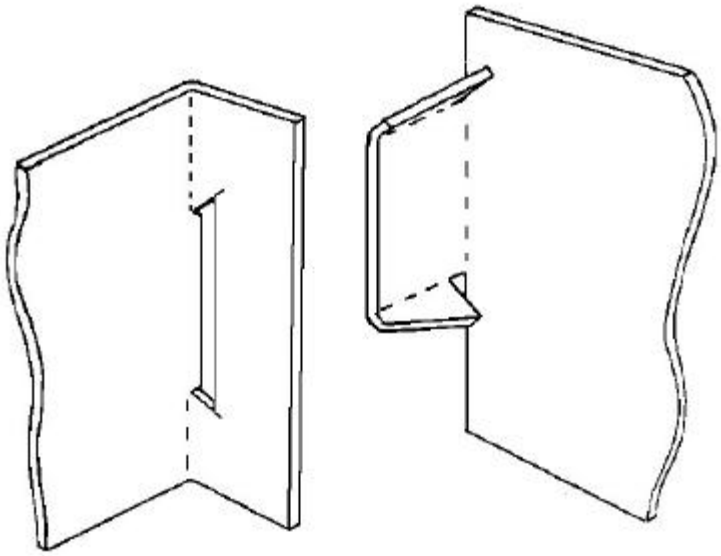

B65D 5/307

[N: combined with a tongue provided in an adjacent side wall]

Definition statement

This subclass/group covers:

Illustrative example of subject matter classified in this group:

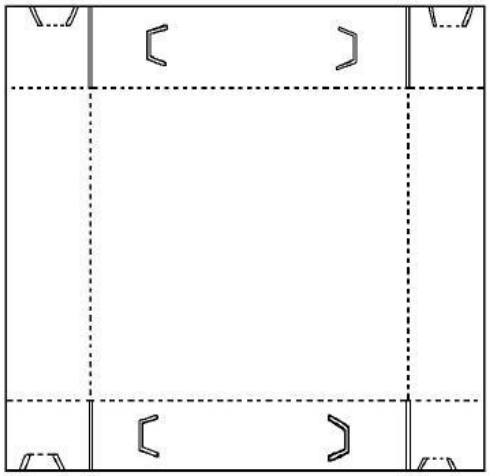

B65D 5/308

[N: the slot being provided in a lateral extension of a side wall combined with a tongue being a part of an adjacent side wall]

Definition statement

This subclass/group covers:

Illustrative example of subject matter classified in this group:

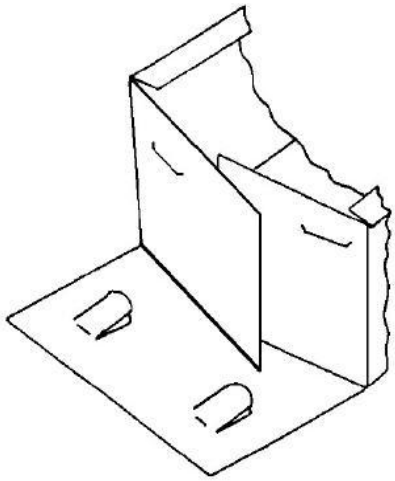

B65D 5/32

having bodies formed by folding and interconnecting two or more blanks [N: each blank forming a body part, whereby each body part comprises at least one outside face of the box, carton or tray]

Informative references

Attention is drawn to the following places, which may be of interest for search:

With end closures formed by separately from tubular body	B65D 5/12

B65D 5/321

[N: at least one container body part formed by folding up portions of a single blank connected to a central panel from all sides]

Definition statement

This subclass/group covers:

Illustrative example of subject matter classified in this group:

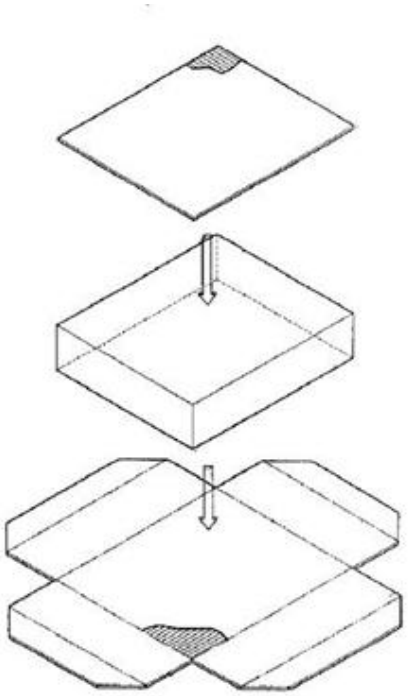

B65D 5/323

[N: and two further opposed body panels formed from two essentially planar blanks]

Definition statement

This subclass/group covers:

Illustrative example of subject matter classified in this group:

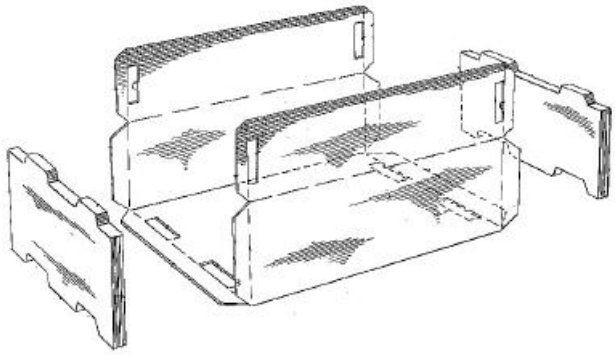

B65D 5/324

[N: at least two container body parts, each formed by folding a single blank to essentially U-shape]

Definition statement

This subclass/group covers:

Illustrative example of subject matter classified in this group:

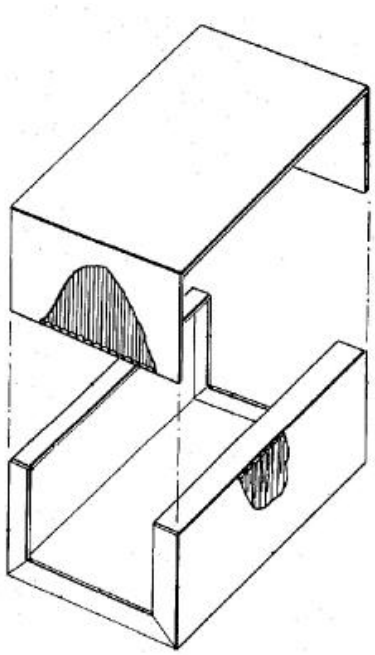

B65D 5/325

[N: whereby one blank forms three sides of the body, and the other blank forms the remaining sides, a hinged lid, and the opposite end closure]

Definition statement

This subclass/group covers:

Illustrative example of subject matter classified in this group:

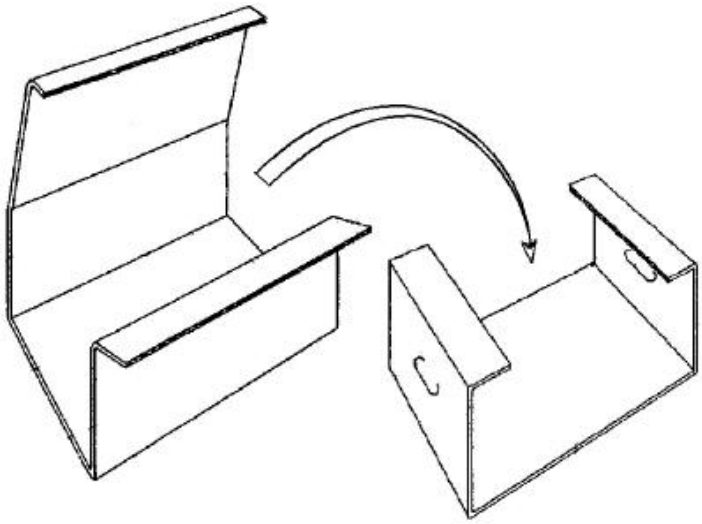

B65D 5/327

[N: at least two container body parts, each formed by folding a single blank to a permanently assembled tube]

Definition statement

This subclass/group covers:

Illustrative example of subject matter classified in this group:

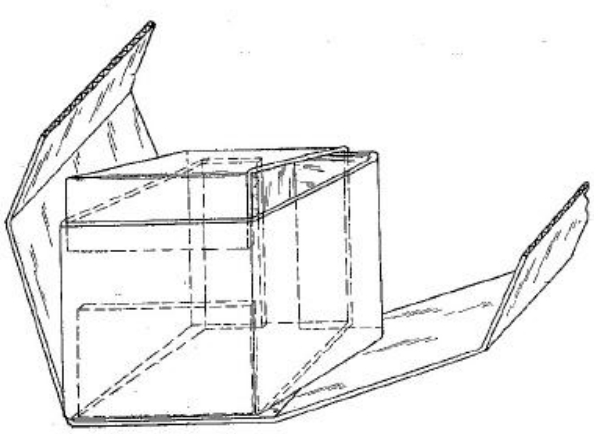

B65D 5/328

[N: and the tubular body parts being aligned axially to form a container]

Definition statement

This subclass/group covers:

Illustrative example of subject matter classified in this group:

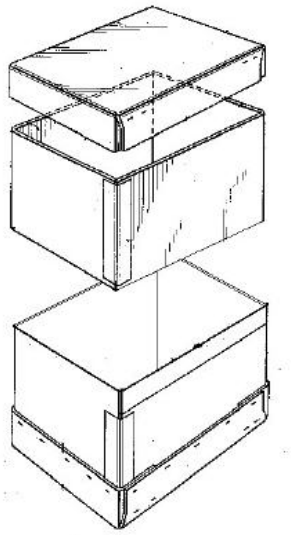

B65D 5/36

specially constructed to allow collapsing and re-erecting without disengagement of side or bottom connections

References relevant to classification in this group

This subclass/group does not cover:

Of variable capacity	B65D 5/0005
Devices formed separately from container body for holding in erected state	B65D 5/4283

B65D 5/3621

[N: collapsed along two fold lines of the tubular body]

Definition statement

This subclass/group covers:

Illustrative example of subject matter classified in this group:

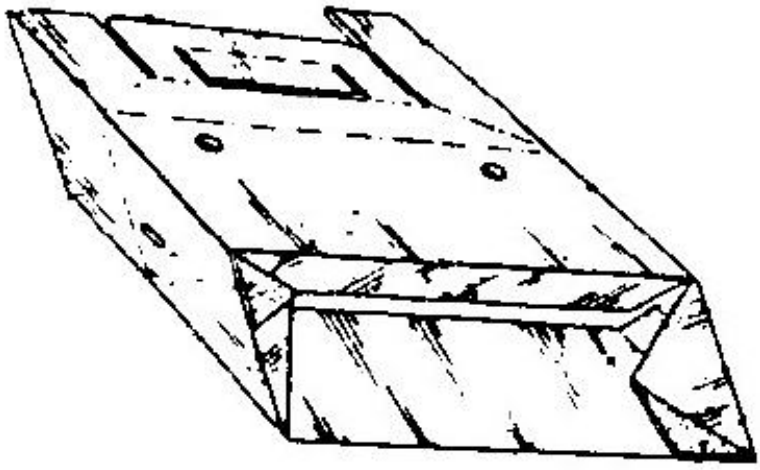

B65D 5/3628

[N: collapsed along median lines of two opposite sides of the rectangular tubular body]

Definition statement

This subclass/group covers:

Illustrative example of subject matter classified in this group:

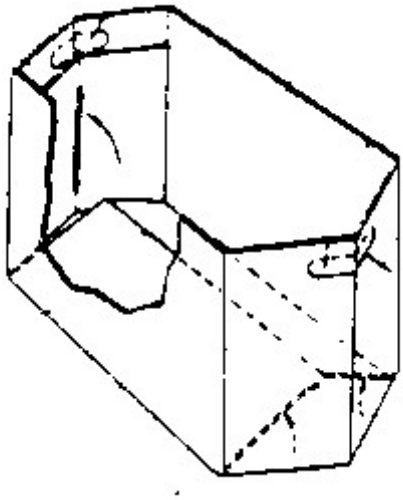

B65D 5/3642

[N: the secured corners presenting diagonal, bissecting or similar folding lines, the central panel presenting no folding line]

Definition statement

This subclass/group covers:

Illustrative example of subject matter classified in this group:

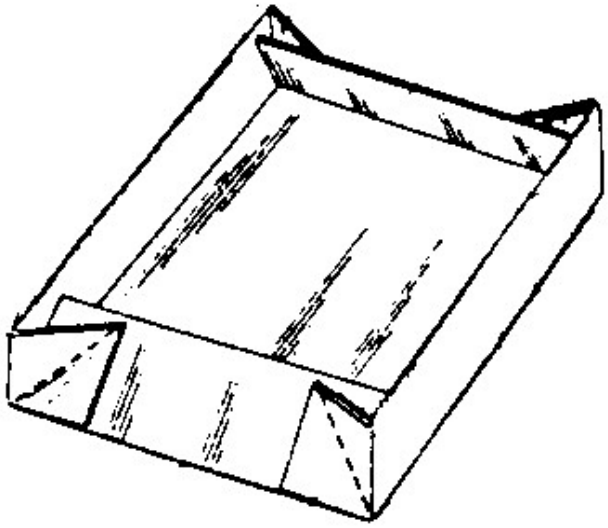

B65D 5/365

[N: the extensions of one or more sides being doubled-over to enclose extensions of adjacent sides]

References relevant to classification in this group

This subclass/group does not cover:

At least one side being extended and doubled-over to enclose the adjacent gusset flaps	B65D 5/3664

Informative references

Attention is drawn to the following places, which may be of interest for search:

Held erect by extensions of one or more sides being doubled-over to enclose extensions of adjacent sides	B65D 5/22

B65D 5/3657

[N: the adjacent sides being interconnected by gusset folds]

Informative references

Attention is drawn to the following places, which may be of interest for search:

With adjacent sides interconnected by gusset folds	B65D 5/24

B65D 5/3671

[N: the sides being connected to extensions of other sides by tongue-and-slot connections]

Informative references

Attention is drawn to the following places, which may be of interest for search:

With tongue-and-slot or like connections between sides and extensions of other sides	B65D 5/30

B65D 5/3678

[N: collapsed along median lines of two opposite sides and the central panel]

Definition statement

This subclass/group covers:

Illustrative example of subject matter classified in this group:

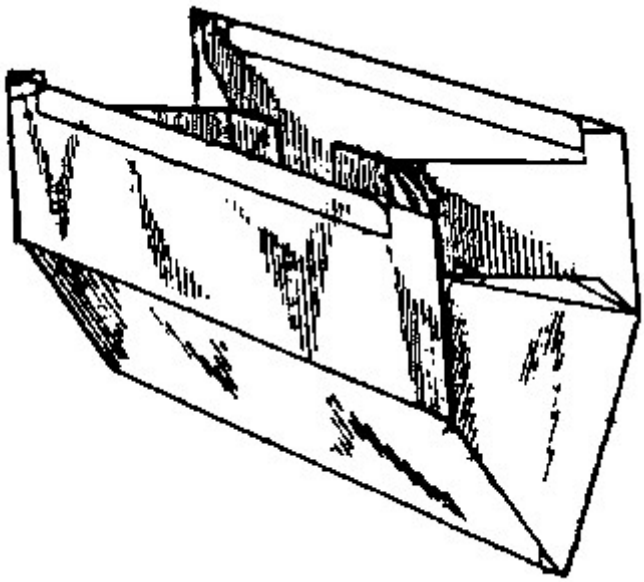

B65D 5/38

Drawer-and-shell type containers

References relevant to classification in this group

This subclass/group does not cover:

Dispensing means	B65D 5/728

B65D 5/42

Details of containers or of foldable or erectable container blanks

References relevant to classification in this group

This subclass/group does not cover:

Packages for bulky articles such as fridges	B65D 85/64, B65D 85/68
Grouping of articles	B65D 69/00, B65D 71/00

Informative references

Attention is drawn to the following places, which may be of interest for search:

Details of packages formed by enclosing articles or materials in preformed containers	B65D 77/22

B65D 5/4204

[N: Inspection openings or windows]

Definition statement

This subclass/group covers:

Illustrative example of subject matter classified in this group:

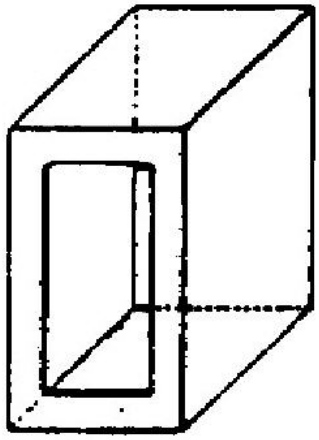

B65D 5/4208

[N: Means facilitating suspending, lifting, handling, or the like of containers (handles B65D 5/46)]

Definition statement

This subclass/group covers:

Illustrative example of subject matter classified in this group:

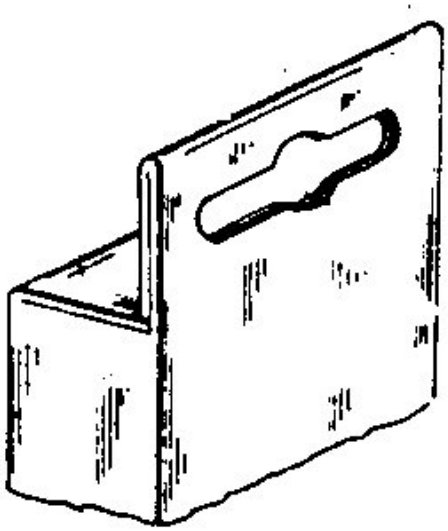

Informative references

Attention is drawn to the following places, which may be of interest for search:

External fittings for facilitating lifting or suspending of containers	B65D 25/22

B65D 5/4212

[N: Information or decoration elements, e.g. content indicators, or for mailing (B65D 5/522 takes precedence)]

References relevant to classification in this group

This subclass/group does not cover:

Decorative ribbons and rosettes	B65D 67/00
Containers provided with decoration or information elements which are displaced to display the contents	B65D 5/522

Informative references

Attention is drawn to the following places, which may be of interest for search:

Means of attachment of smaller articles of tags	B65D 23/14
Means for the attachment of labels,	B65D 25/205

cards, coupons or the like	
Information or decoration elements	B65D 33/004
The inserts or accessories being located within a pouch or envelope attached to the exterior of the packages	B65D 75/545

B65D 5/4216

[N: Cards, coupons or the like formed integrally with, or printed directly on, the container or lid]

Definition statement

This subclass/group covers:

Illustrative example of subject matter classified in this group:

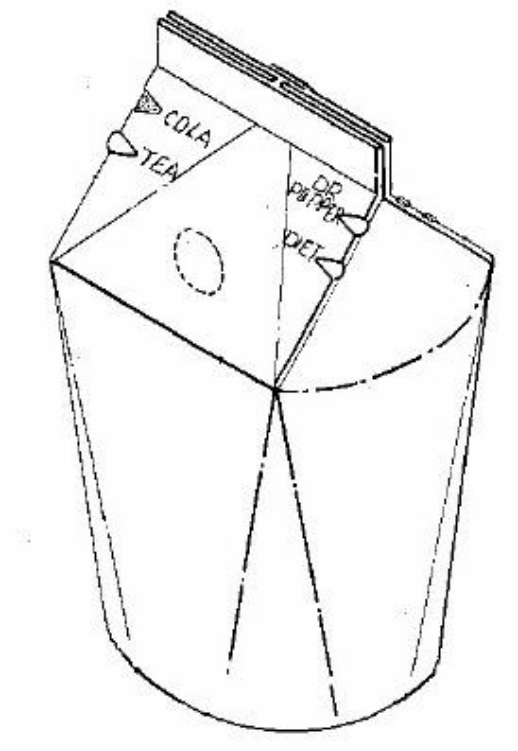

B65D 5/422

[N: as an extra panel or panels folded against or inside the container (B65D 5/4237 takes precedence)] [N0008]

Definition statement

This subclass/group covers:

Illustrative example of subject matter classified in this group:

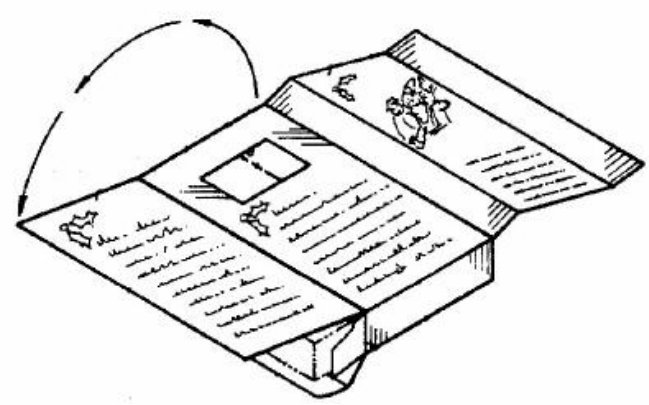

References relevant to classification in this group

This subclass/group does not cover:

Pull- or fold out labels	G09F 3/0289
Located in a compartment formed by a container wall and additional panel or panels formed integrally with the container	B65D 5/4237

B65D 5/4225

[N: as an extra panel or panels projecting out of the plane of the container (B65D 5/4241 takes precedence)]

Definition statement

This subclass/group covers:

Illustrative example of subject matter classified in this group:

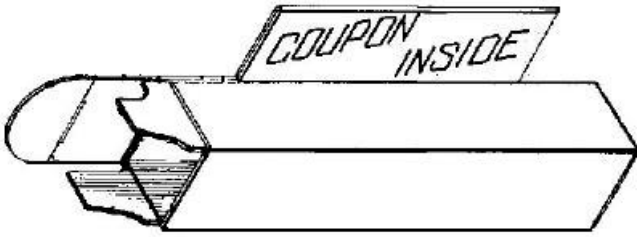

References relevant to classification in this group

This subclass/group does not cover:

Located in a compartment formed by a double-walled panel projecting out of the plane of the container	B65D 5/4241

B65D 5/4229

[N: in the form of a detachable panel]

Definition statement

This subclass/group covers:

Illustrative example of subject matter classified in this group:

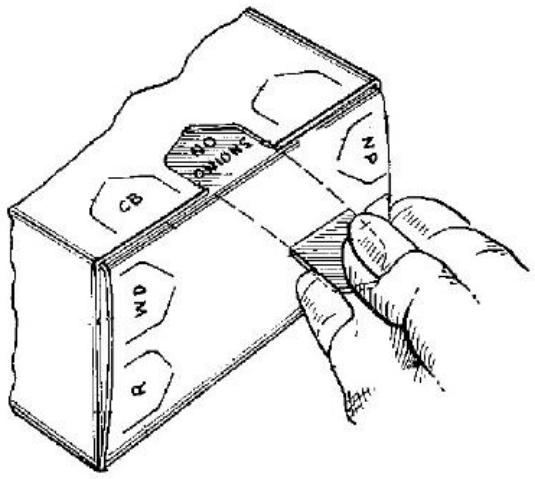

B65D 5/4237

[N: located in a compartment formed by a container wall and additional panel or panels formed integrally with the container]

Definition statement

This subclass/group covers:

Illustrative example of subject matter classified in this group:

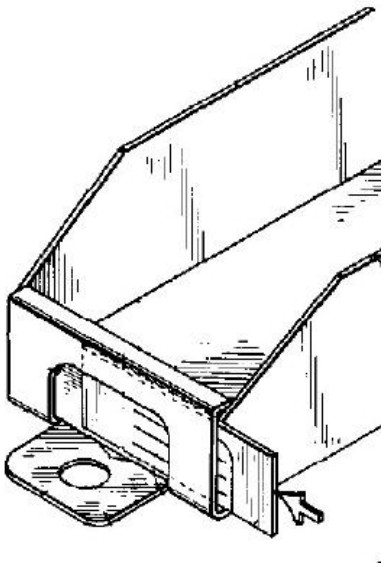

B65D 5/4245

[N: Bands covering at least 3 adjacent faces of a container (B65D 5/4262 takes precedence)]

Definition statement

This subclass/group covers:

Illustrative example of subject matter classified in this group:

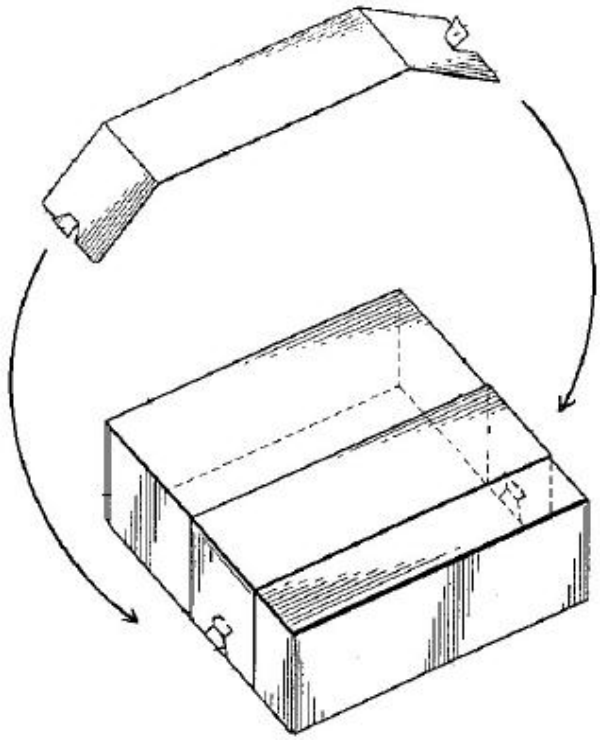

References relevant to classification in this group

This subclass/group does not cover:

Bands covering at least 3 adjacent faces of a container provided with a decoration	B65D 5/4262

B65D 5/425

[N: Decoration elements]

Definition statement

This subclass/group covers:

Integral to attached elements other than the package contents added to the package for decorative purposes

Illustrative example of subject matter classified in this group:



B65D 5/4254

[N: formed by two or mating closure panels, e.g. forming a butterfly, bow-tie, etc.]

Definition statement

This subclass/group covers:

Illustrative example of subject matter classified in this group:

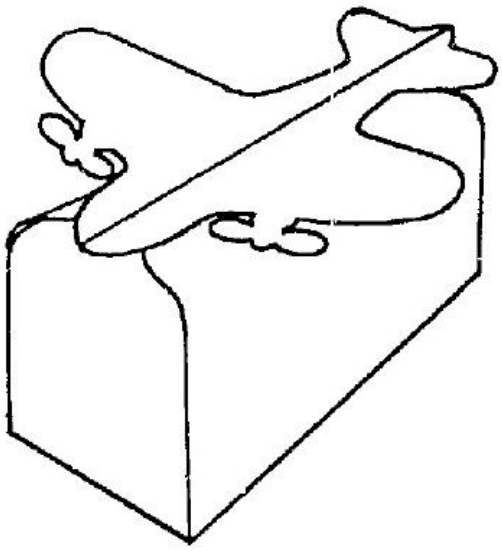

B65D 5/4258

[N: providing 3-dimensional perspective images by means of two or more spaced apart images]

Definition statement

This subclass/group covers:

Illustrative example of subject matter classified in this group:

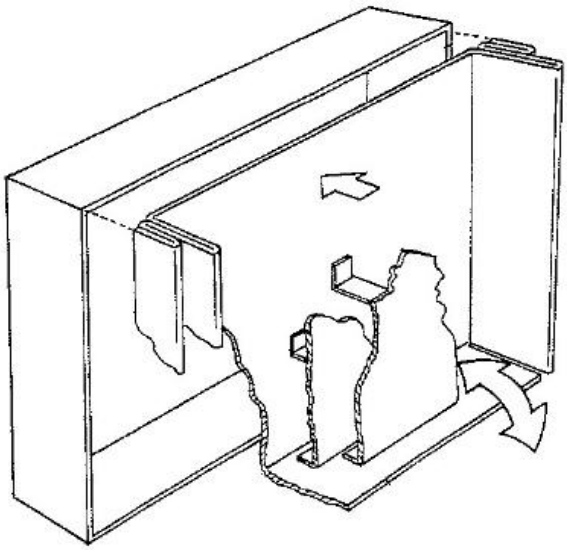

B65D 5/4262

[N: Bands covering at least 3 adjacent faces of a container provided with a decoration, e.g. bow]

Definition statement

This subclass/group covers:

Illustrative example of subject matter classified in this group:

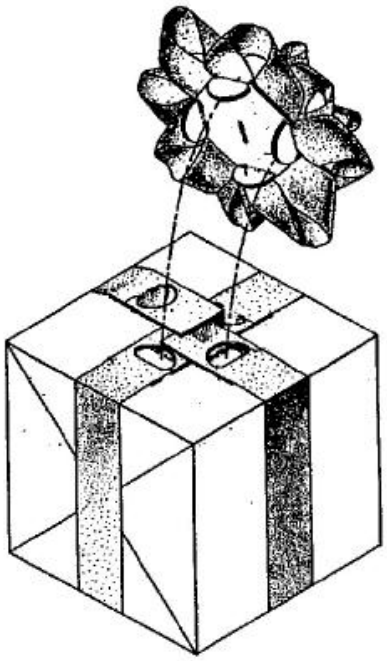

B65D 5/4266

[N: Folding lines, score lines, crease lines]

Definition statement

This subclass/group covers:

folding, score or crease lines of particular shape, e.g. undulating, interrupted, etc., or made in a particular way, e.g. broader than usual, of varying depth, etc.

Illustrative example of subject matter classified in this group:

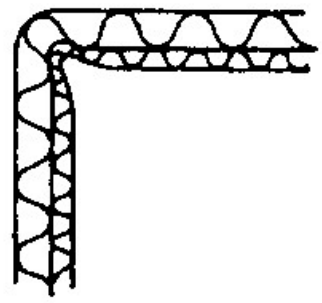

References relevant to classification in this group

This subclass/group does not cover:

Tear strips or score lines for opening or dividing into separate parts	B65D 5/54

B65D 5/427

[N: Individual packages joined together, e.g. by means of integral tabs (B65D 5/5495 takes precedence)]

Definition statement

This subclass/group covers:

Illustrative example of subject matter classified in this group:

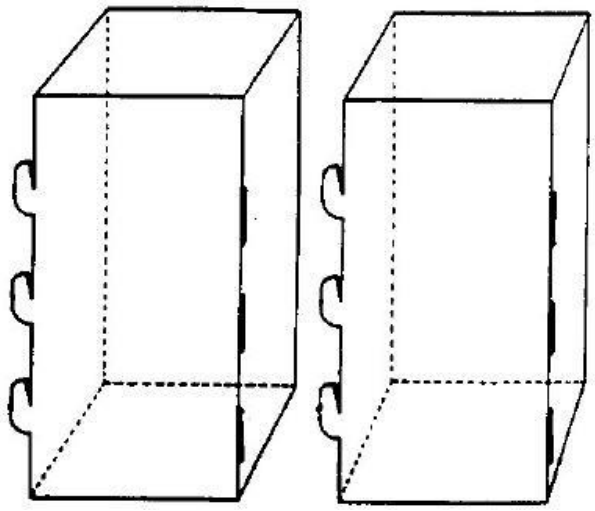

B65D 5/4275

[N: by bonding, adhesive, hook and loop-type fastener or the like]

Definition statement

This subclass/group covers:

Illustrative example of subject matter classified in this group:

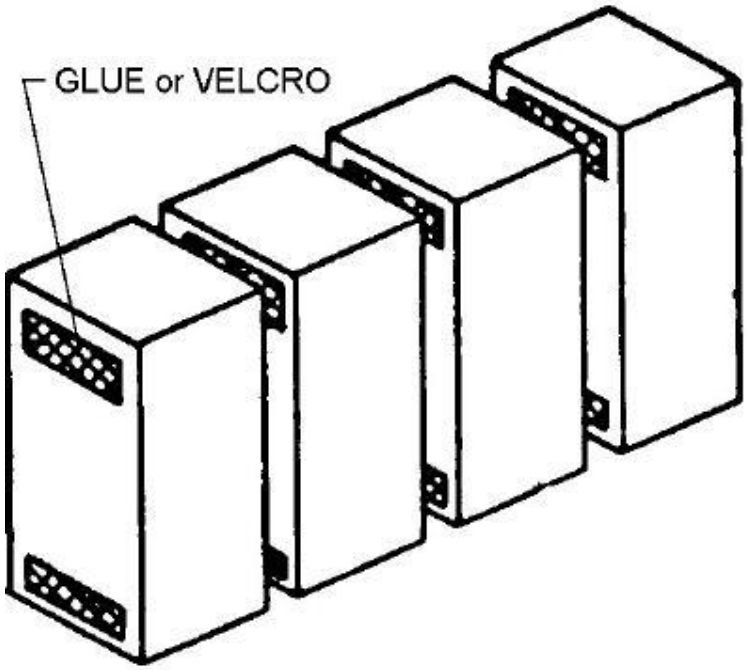

Relationship between large subject matter areas

For Velcro add code B65D 2313/02;

B65D 5/4279

[N: Joints, seams, leakproof joints or corners, special connections between panels (B65D 5/209 takes precedence)]

Definition statement

This subclass/group covers:

Illustrative example of subject matter classified in this group:



References relevant to classification in this group

This subclass/group does not cover:

The adjacent edges of folded-up portions being joined by moulding seams in situ	B65D 5/209

Informative references

Attention is drawn to the following places, which may be of interest for search:

With tongue-and-slow or like connections between sides and extensions of other sides	B65D 5/30

B65D 5/4283

[N: Connections formed by separate elements, e.g. clips, bands, straps (B65D 5/0227, B65D 5/0236 take precedence)]

Definition statement

This subclass/group covers:

Illustrative example of subject matter classified in this group:

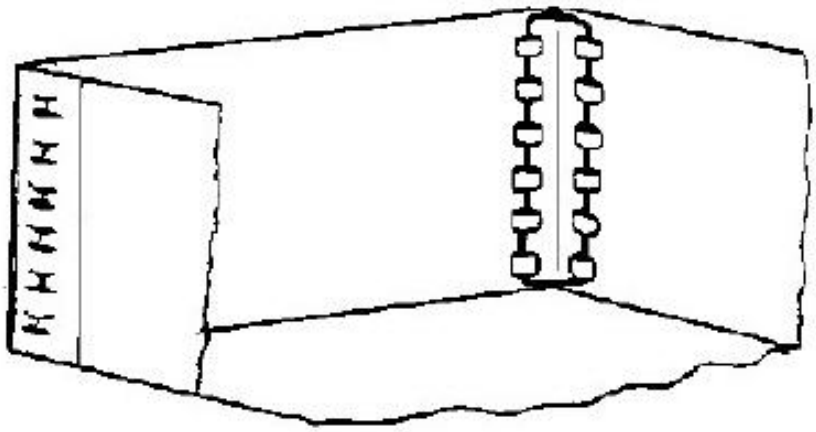

References relevant to classification in this group

This subclass/group does not cover:

With end closures formed by inward folding of flaps and securing them by heat-sealing, adhesive applied to the flaps or staples	B65D 5/0227
With end closures formed by inward folding of flaps and securing them by adhesive tapes, labels or the like; for decoration purposes	B65D 5/0236
Releasable fastenings clips	F16B 2/20

B65D 5/4287

[N: the container being formed by folding-up portions connected to a central panel from all sides, adjacent sides being interconnected by gusset folds and the container being maintained in erected condition by means of the separate connectors coacting with the gusset folds]

Definition statement

This subclass/group covers:

Illustrative example of subject matter classified in this group:

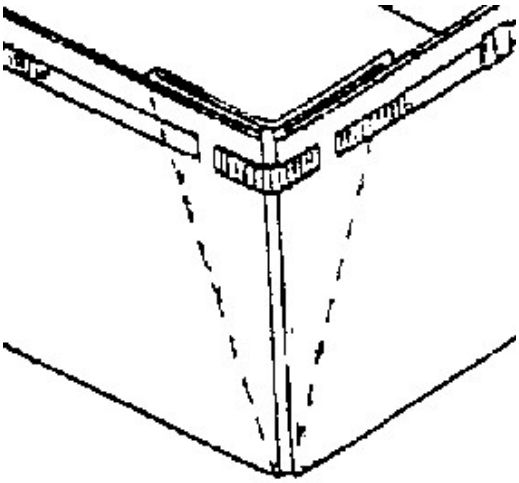

Informative references

Attention is drawn to the following places, which may be of interest for search:

Tray construction per se	B65D 5/24

B65D 5/4291

[N: Containers provided with an acoustic device, e.g. for indicating opening of the package]

Informative references

Attention is drawn to the following places, which may be of interest for search:

The closure being provided with transient audible or visual signaling	B65D 51/248

means	
Initial opening or unauthorised access being indicated by the presence or absence of an audible or electrical signal	B65D 55/028

B65D 5/4295

[N: Ventilating arrangements, e.g. openings, space elements]

Definition statement

This subclass/group covers:
Illustrative example of subject matter classified in this group:

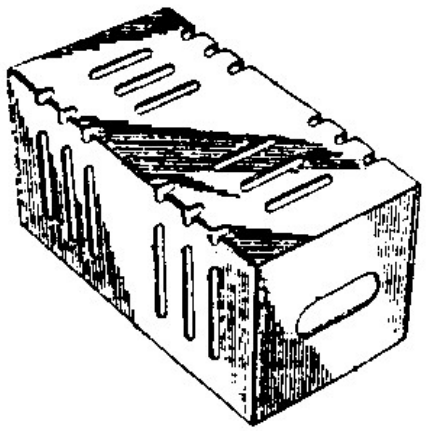

Informative references

Attention is drawn to the following places, which may be of interest for search:

For the circulation of warm air to improve the heating of packaged food	**L65D81/34M200M**
Venting means	B65D 2205/00

B65D 5/443

[N: Integral reinforcements, e.g. folds, flaps (double walls B65D 5/02)]

Definition statement

This subclass/group covers:
Illustrative example of subject matter classified in this group:

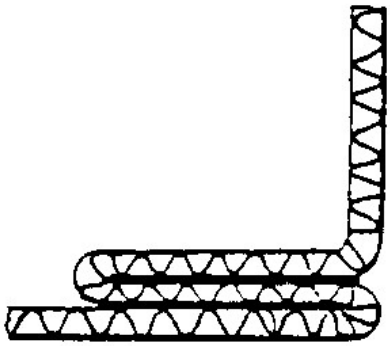

References relevant to classification in this group

This subclass/group does not cover:

Double walls for tubular containers	B65D 5/0281

B65D 5/446

[N: Wooden reinforcements]

Definition statement

This subclass/group covers:
Illustrative example of subject matter classified in this group:

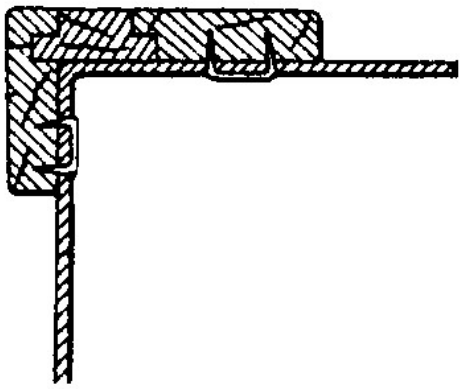

B65D 5/448

[N: Metal or wire reinforcements]

Definition statement

This subclass/group covers:
Illustrative example of subject matter classified in this group:

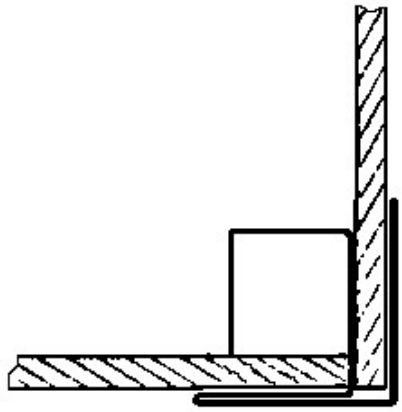

B65D 5/46

Handles

References relevant to classification in this group

This subclass/group does not cover:

Means for suspending containers	B65D 5/4208

B65D 5/46016

[N: Straps used as handles fixed to the container by glueing, stapling, heat-sealing (for packages in wrappers B65D 75/56)]

Definition statement

This subclass/group covers:
Illustrative example of subject matter classified in this group:

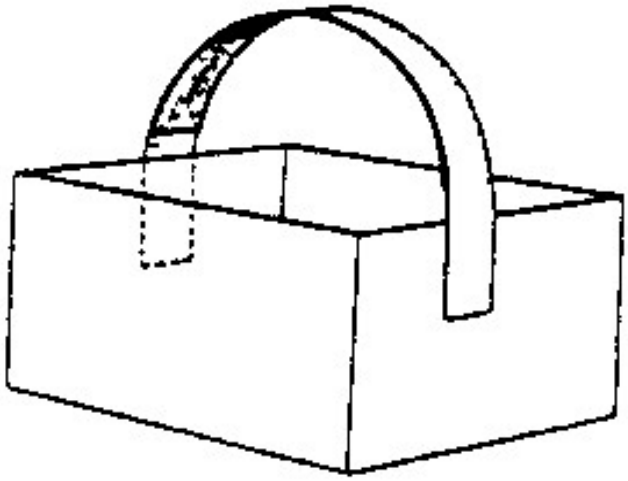

B65D 5/46024

[N: Straps used as handles with anchoring elements fixed in slots]

Definition statement

This subclass/group covers:

Illustrative example of subject matter classified in this group:

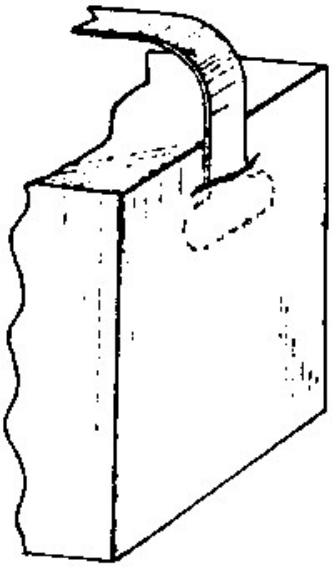

B65D 5/46032

[N: Handles with anchoring elements, e.g. formed by folding a blank (B65D 5/46064 takes precedence; straps B65D 5/46024)]

Definition statement

This subclass/group covers:
Illustrative example of subject matter classified in this group:

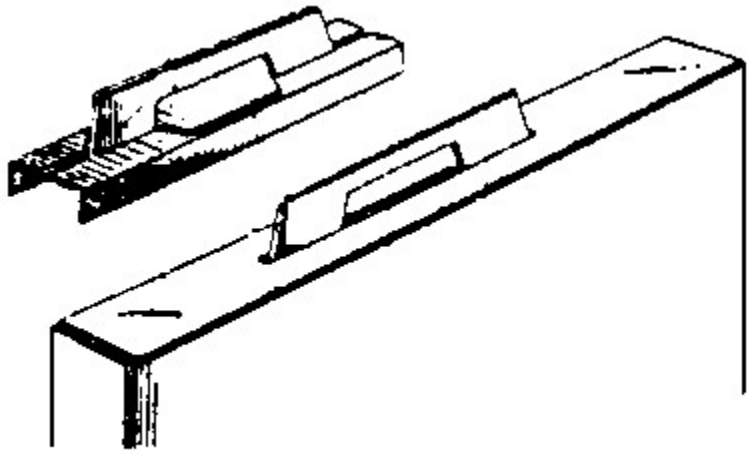

References relevant to classification in this group

This subclass/group does not cover:

Formed by folding a blank serving also as a partition in the container	B65D 5/46064

B65D 5/4604

[N: not formed by folding a blank]

Definition statement

This subclass/group covers:
Illustrative example of subject matter classified in this group:

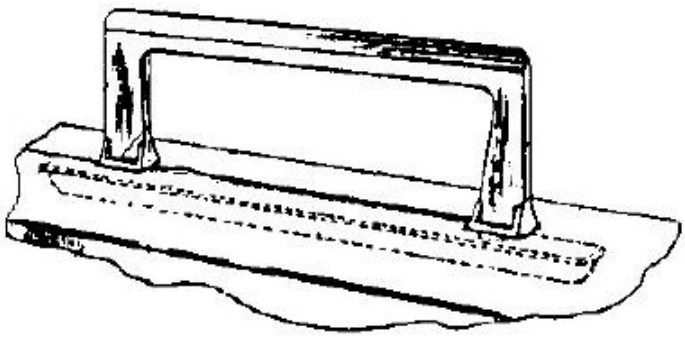

Informative references

Attention is drawn to the following places, which may be of interest for search:

Handles for carrying purposes	A45F 5/10

B65D 5/46048

[N: made of metal wire]

Definition statement

This subclass/group covers:
Illustrative example of subject matter classified in this group:

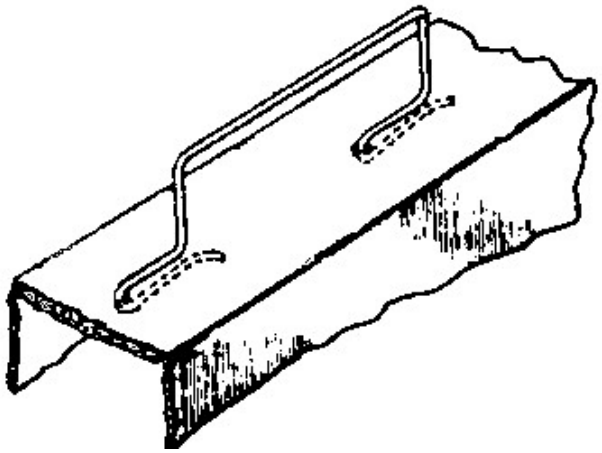

Informative references

Attention is drawn to the following places, which may be of interest for search:

Handles for carrying purposes	A45F 5/10

B65D 5/46056

[N: made of cord]

Definition statement

This subclass/group covers:
Illustrative example of subject matter classified in this group:

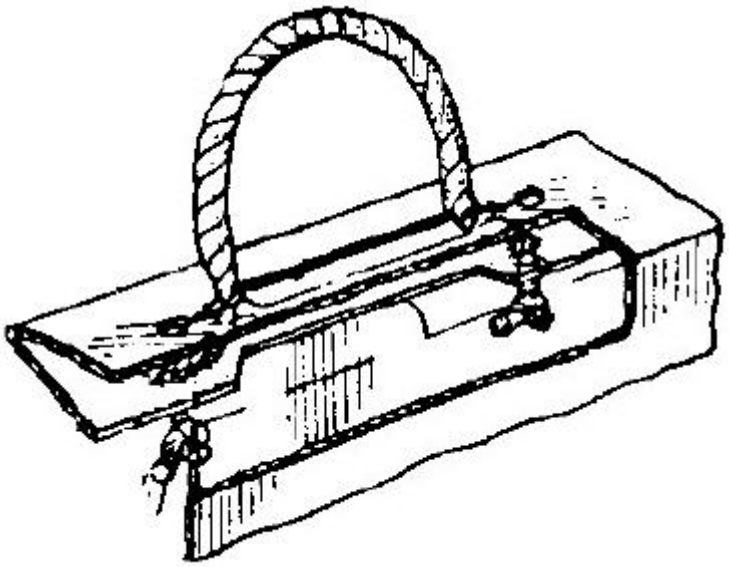

Informative references

Attention is drawn to the following places, which may be of interest for search:

Handles for carrying purposes	A45F 5/10

B65D 5/46064

[N: formed by folding a blank serving also as a partition in the container]

Definition statement

This subclass/group covers:

Illustrative example of subject matter classified in this group:

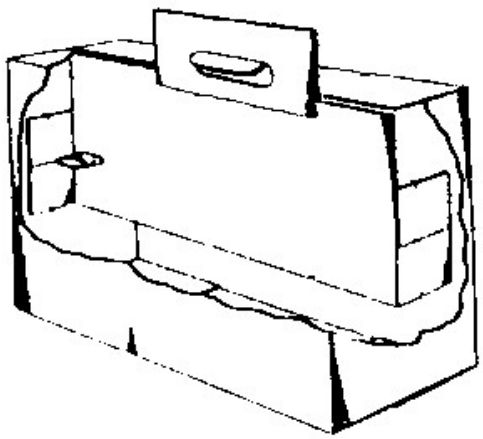

B65D 5/4608

[N: Handgrip holes]

Definition statement

This subclass/group covers:
Illustrative example of subject matter classified in this group:

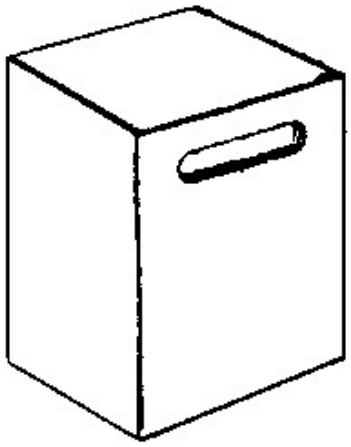

B65D 5/46096

[N: two opposite closure flaps being provided with handle elements which are in contact with each other]

Definition statement

This subclass/group covers:
Illustrative example of subject matter classified in this group:

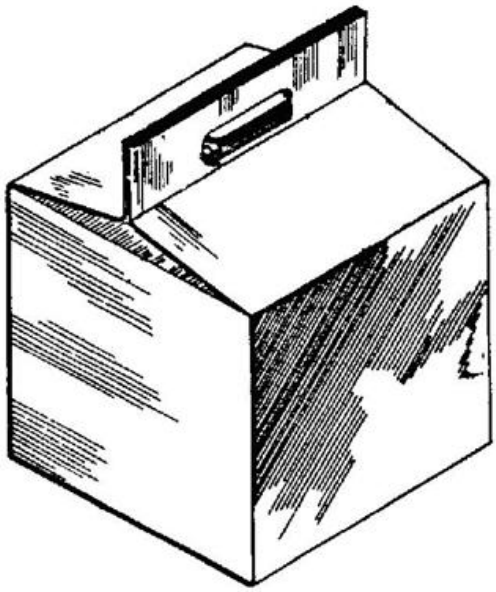

References relevant to classification in this group

This subclass/group does not cover:

If extensions of side flaps	B65D 5/46088

B65D 5/46104

[N: at least one of the other closure flaps being provided with a slit which completely encompasses the two handle elements to maintain the handle in position]

Definition statement

This subclass/group covers:

Illustrative example of subject matter classified in this group:

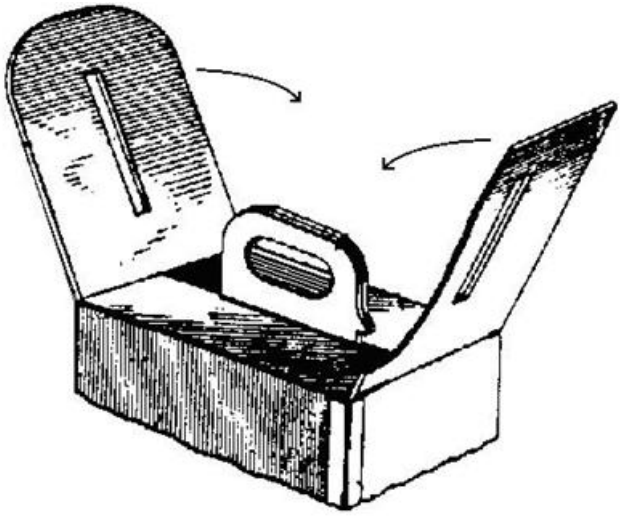

B65D 5/46112

[N: either the handle elements being formed with lugs which engage with the other side walls or closure flaps, or the other closure flaps folding over a part of the handle to maintain the handle in position]

Definition statement

This subclass/group covers:

Illustrative example of subject matter classified in this group:

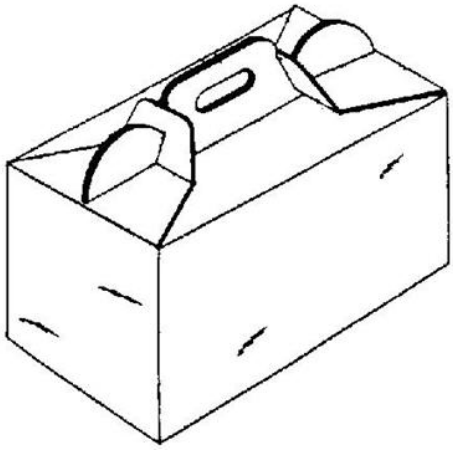

B65D 5/4612

[N: formed by extensions of side flaps or by side flaps of a container formed by folding-up portions connected to a central panel from all sides]

Definition statement

This subclass/group covers:

Illustrative example of subject matter classified in this group:

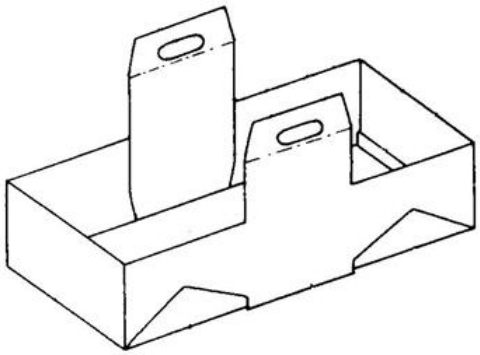

B65D 5/46136

[N: at least one of the other closure flaps being provided with a slit which completely encompasses the two handle elements to maintain the handle in position]

Definition statement

This subclass/group covers:

Illustrative example of subject matter classified in this group:

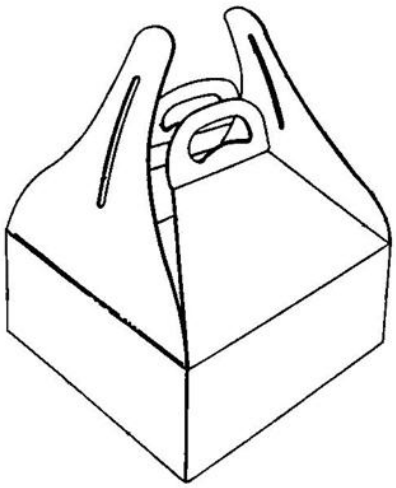

B65D 5/46144

[N: either the handle elements being formed with lugs which engage with the other side walls or closure flaps, or the other closure flaps folding over a part of the handle to maintain the handle in position]

Definition statement

This subclass/group covers:

Illustrative example of subject matter classified in this group:

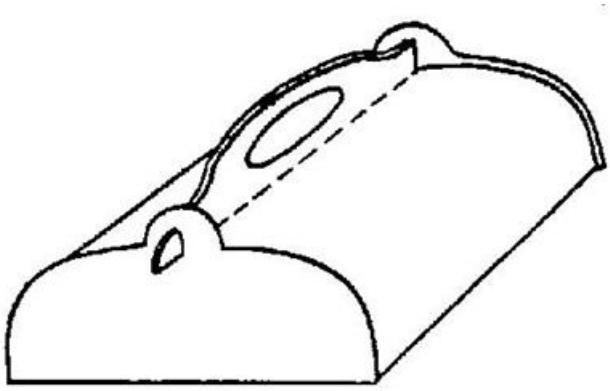

B65D 5/46152

[N: formed in closure flaps of a container formed by folding a blank to U-shape to form the base and opposite sides, the remaining sides being formed by extensions of these opposite sides]

Definition statement

This subclass/group covers:

Illustrative example of subject matter classified in this group:

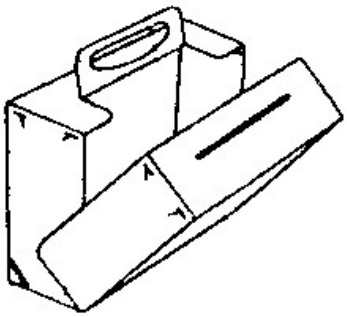

B65D 5/46168

[N: at least one of the other closure flaps being provided with a slit which completely encompasses the two handle elements to maintain the handle in position]

Definition statement

This subclass/group covers:

Illustrative example of subject matter classified in this group:

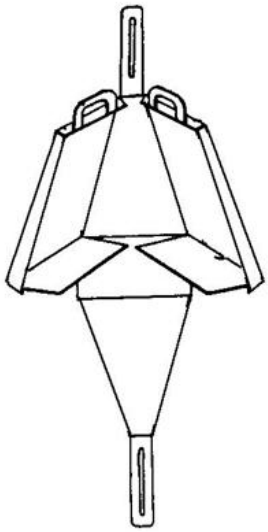

B65D 5/46176

[N: either the handle elements being formed with lugs which engage with the other side walls or closure flaps, or the other closure flaps folding over a part of the handle to maintain the handle in position]

Definition statement

This subclass/group covers:

Illustrative example of subject matter classified in this group:

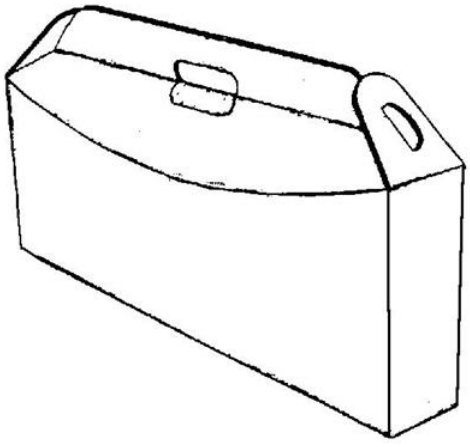

B65D 5/46184

[N: formed by extensions of parts of the blank, serving also as a partition in the container]

Definition statement

This subclass/group covers:
Illustrative example of subject matter classified in this group:

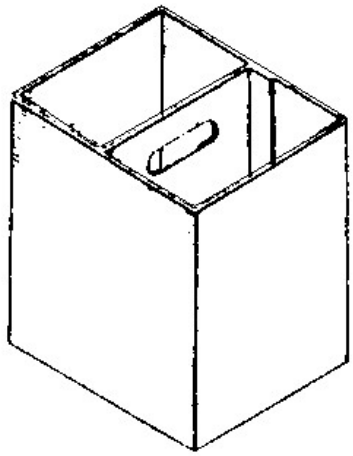

B65D 5/46192

[N: formed by incisions in the container or blank forming straps used as handles]

Definition statement

This subclass/group covers:
Illustrative example of subject matter classified in this group:

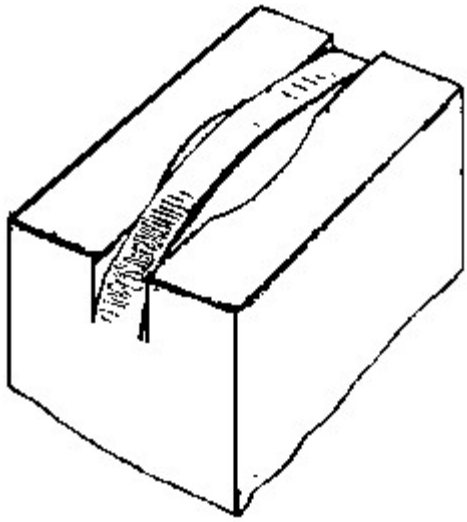

B65D 5/48

Partitions

Informative references

Attention is drawn to the following places, which may be of interest for search:

For separating interconnected containers	B65D 5/5495

B65D 5/48002

[N: integral]

Informative references

Attention is drawn to the following places, which may be of interest for search:

Formed by folding or erecting one blank, and provided with vertical partitions	B65D 71/0022
Partitions extending from the upper or lower wall	B65D 2571/00339
Partitions extending from at least a side wall	B65D 2571/0037

B65D 5/48004

[N: Squaring, i.e. at least four not aligned compartments]

Informative references

Attention is drawn to the following places, which may be of interest for search:

Formed by folding or erecting one blank, and provided with vertical partitions	B65D 71/0022
Containers with compartments formed by erecting one blank	B65D 85/325
Partitions extending from the upper or lower wall, squarings or the like	B65D 2571/00345
Partitions extending from at least a side wall, squarings or the like	B65D 2571/00376

B65D 5/48006

[N: Longitudinal partition provided with cut flaps folded perpendicular to the partition]

Definition statement

This subclass/group covers:

Illustrative example of subject matter classified in this group:

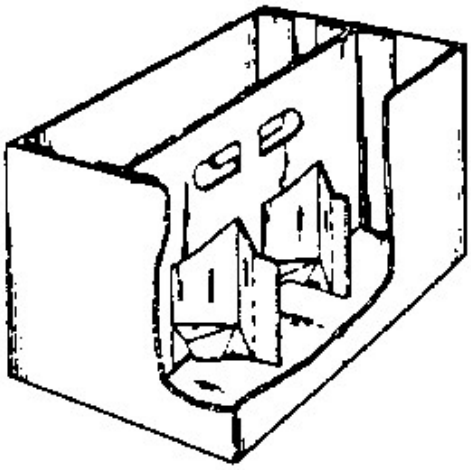

B65D 5/48008

[N: formed by folding extensions hinged to the upper or lower edges of a tubular body (B65D 5/48006 takes precedence)]

Definition statement

This subclass/group covers:

Illustrative example of subject matter classified in this group:

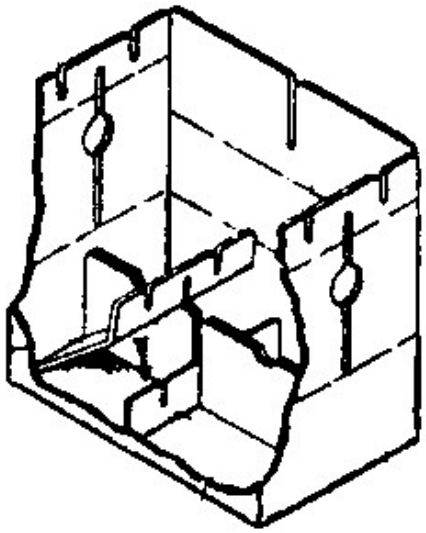

References relevant to classification in this group

This subclass/group does not cover:

Longitudinal partition provided with cut flaps folded perpendicular to the partition	B65D 5/48006

B65D 5/4801

[N: formed by folding extensions of side panels of a "cross-like" body blank]

Definition statement

This subclass/group covers:

Illustrative example of subject matter classified in this group:

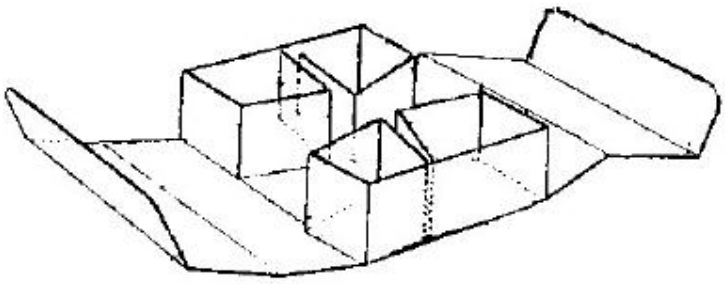

B65D 5/48012

[N: combined with inserted partitions]

Definition statement

This subclass/group covers:

Illustrative example of subject matter classified in this group:

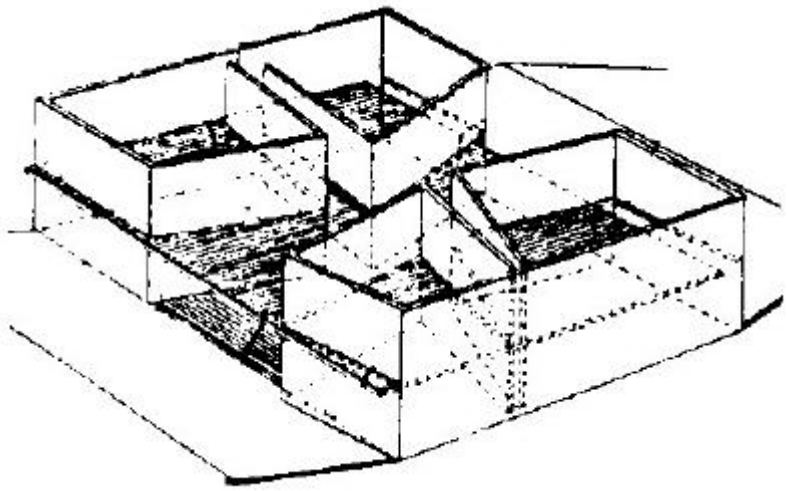

B65D 5/48014

[N: formed by folding extensions hinged to the side edges of a tubular body (B65D 5/48004 takes precedence; partition separated by erecting the body B65D 5/48048)]

Definition statement

This subclass/group covers:

Illustrative example of subject matter classified in this group:

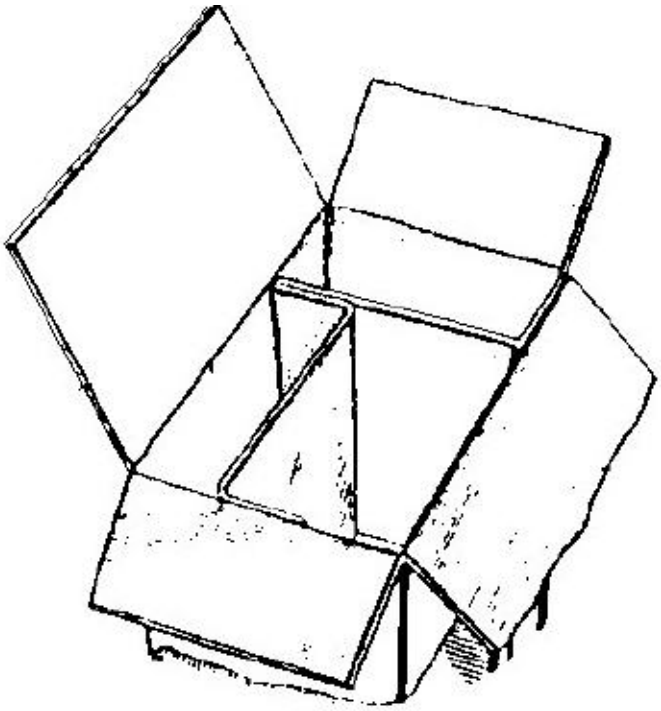

References relevant to classification in this group

This subclass/group does not cover:

Squaring	B65D 5/48004

Informative references

Attention is drawn to the following places, which may be of interest for search:

Formed by folding inwardly of extensions hinged to the side edges of the body	B65D 5/5016

B65D 5/48016

[N: formed by folding extensions hinged to the upper or lower edges of a tubular body (B65D 5/48008 takes precedence)]

Definition statement

This subclass/group covers:

Illustrative example of subject matter classified in this group:

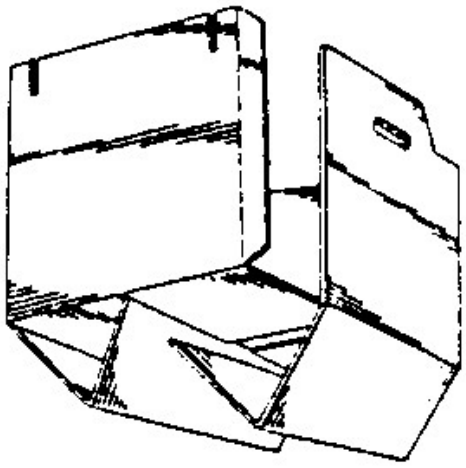

References relevant to classification in this group

This subclass/group does not cover:

Formed by folding extensions hinged to the upper or lower edges of a tubular body	B65D 5/48008

B65D 5/48018

[N: formed by folding extensions of side panels of a "cross-like" body blank (B65D 5/4801 takes precedence)]

Definition statement

This subclass/group covers:

Illustrative example of subject matter classified in this group:

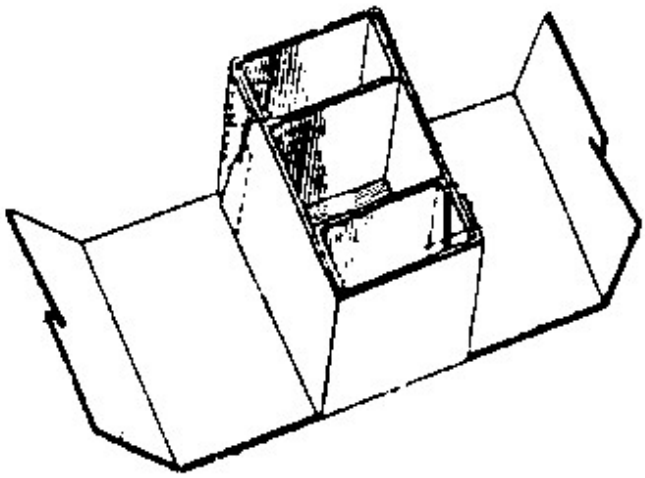

References relevant to classification in this group

This subclass/group does not cover:

Squaring formed by folding extensions of side panels of a "cross-like" body blank	B65D 5/4801

B65D 5/4802

[N: formed by folding inwardly portions cut in the body (B65D 5/48006 takes precedence)]

Definition statement

This subclass/group covers:

Illustrative example of subject matter classified in this group:

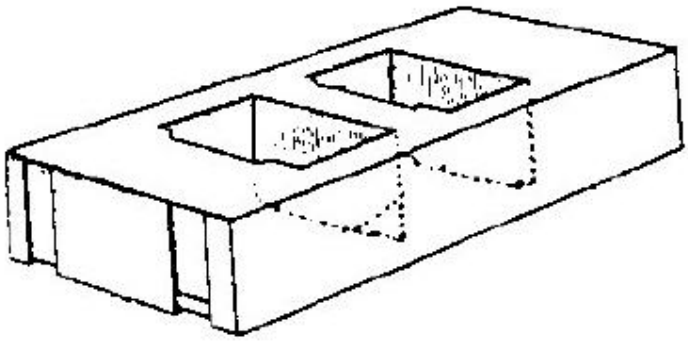

References relevant to classification in this group

This subclass/group does not cover:

Longitudinal partition provided with cut flaps folded perpendicular to the partition	B65D 5/48006

Informative references

Attention is drawn to the following places, which may be of interest for search:

Formed by folding or erecting one blank, and provided with vertical partitions	B65D 71/0022
Partitions extending from the upper or lower wall	B65D 2571/00339
Partitions extending from at least a side wall	B65D 2571/0037

B65D 5/48022

[N: formed by two parallel panels located in the base of a tray being folded up towards each other]

Definition statement

This subclass/group covers:

Illustrative example of subject matter classified in this group:

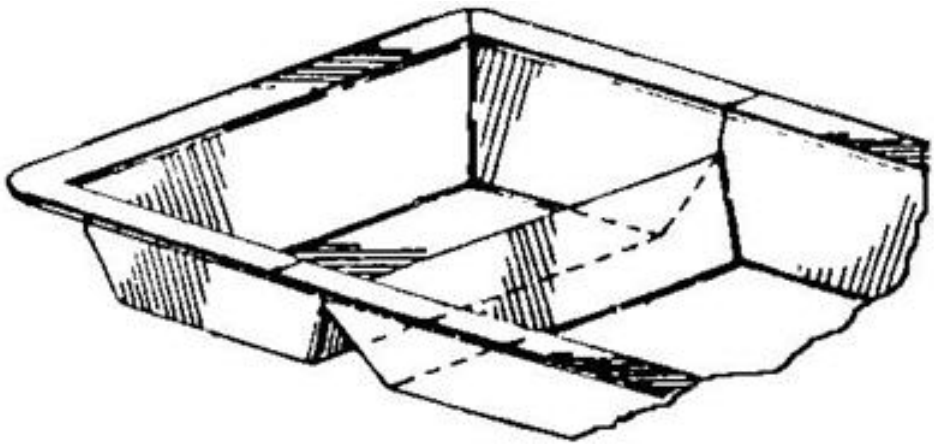

Informative references

Attention is drawn to the following places, which may be of interest for search:

Strip provided with series of folding lines forming the partitions	B65D 5/48042

B65D 5/48026

[N: Squaring or like elements, e.g. honeycomb element, i.e. at least four not aligned compartments (B65D 5/48012 takes precedence)]

References relevant to classification in this group

This subclass/group does not cover:

Combined with inserted partitions	B65D 5/48012

Informative references

Attention is drawn to the following places, which may be of interest for search:

Containers with compartments formed by folding and inter-connecting of two or more blanks	B65D 85/327

B65D 5/48028

[N: formed by folding a single blank (B65D 5/48034 takes precedence)]

Definition statement

This subclass/group covers:

Illustrative example of subject matter classified in this group:

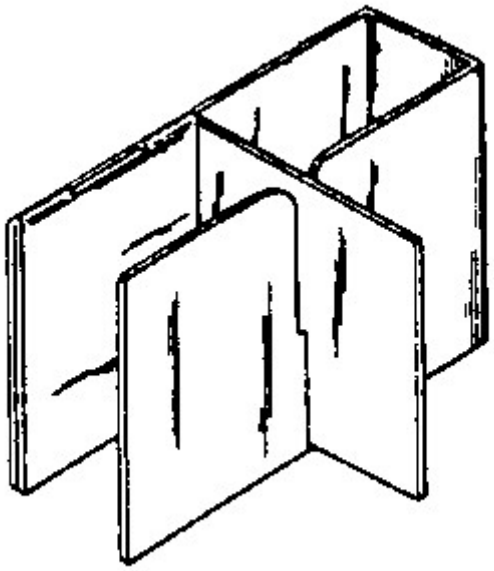

References relevant to classification in this group

This subclass/group does not cover:

By folding a single blank	B65D 5/48034
Longitudinal partition provided with cut flaps folded perpendicular to the partition	B65D 5/48036

B65D 5/4803

[N: not made of paper, e.g. of moulded plastic]

Definition statement

This subclass/group covers:

Illustrative example of subject matter classified in this group:

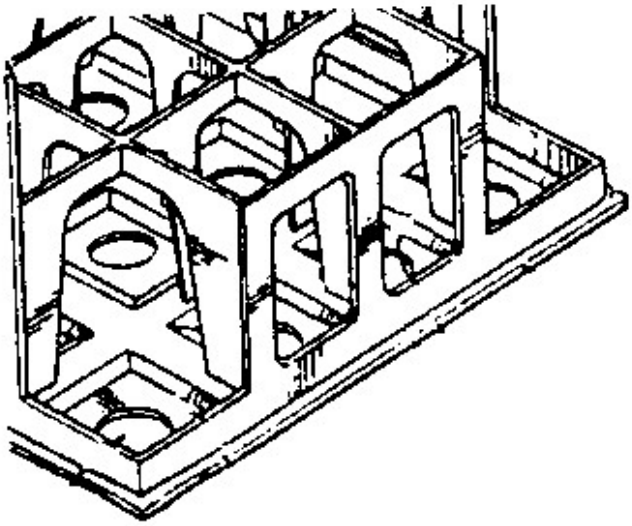

B65D 5/48032

[N: made of paper, provided with an at least partial bottom]

Definition statement

This subclass/group covers:
Illustrative example of subject matter classified in this group:

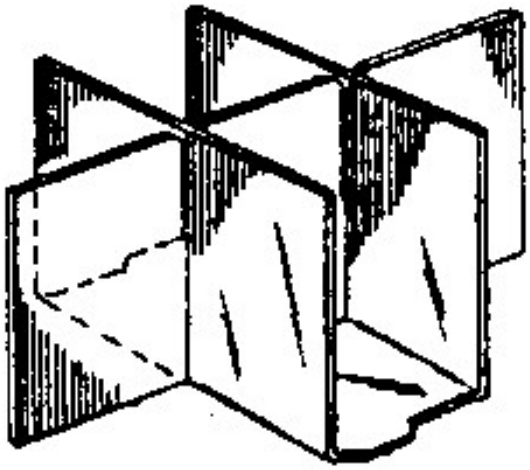

B65D 5/48034

[N: by folding a single blank]

Definition statement

This subclass/group covers:

Illustrative example of subject matter classified in this group:

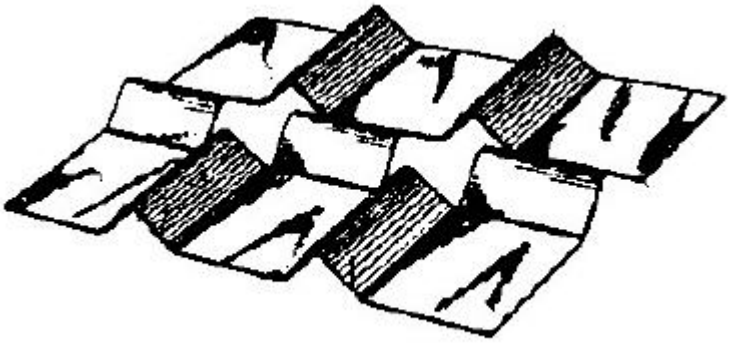

B65D 5/48036

[N: Longitudinal partition provided with cut flaps folded perpendicular to the partition]

Definition statement

This subclass/group covers:

Illustrative example of subject matter classified in this group:

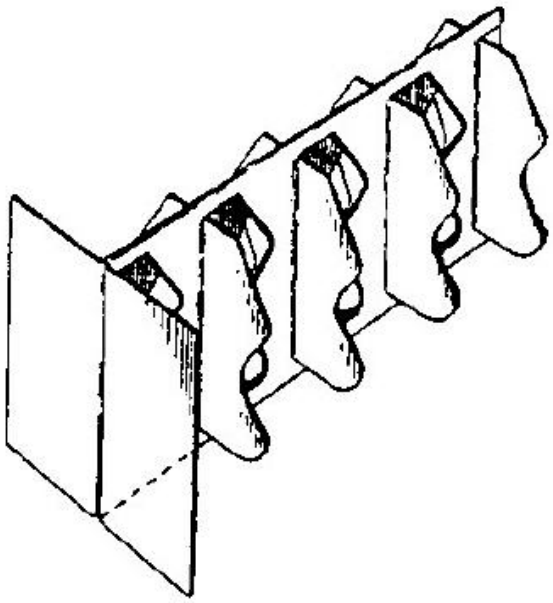

B65D 5/48038

[N: Strips crossing each other]

Definition statement

This subclass/group covers:
Illustrative example of subject matter classified in this group:

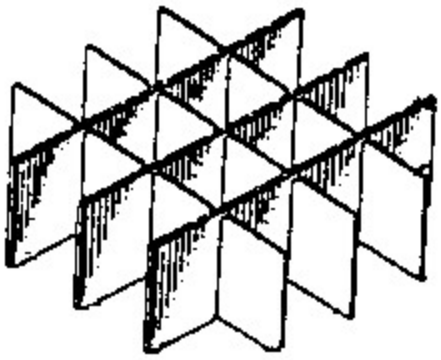

B65D 5/4804

[N: formed by folding strips essentially in tubes, U- or S-shape]

Definition statement

This subclass/group covers:
Illustrative example of subject matter classified in this group:

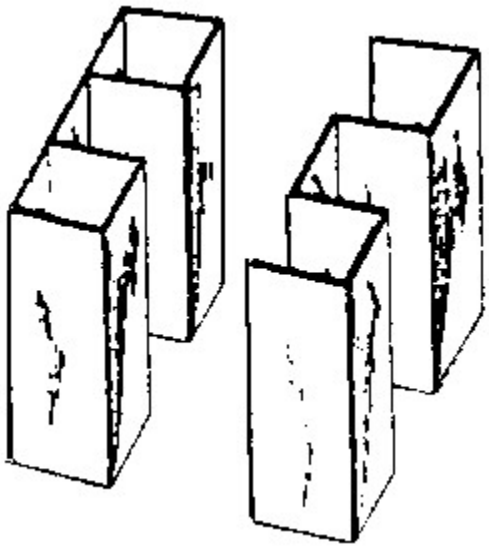

B65D 5/48042

[N: Strip provided with series of folding lines forming the partitions]

Definition statement

This subclass/group covers:

Illustrative example of subject matter classified in this group:

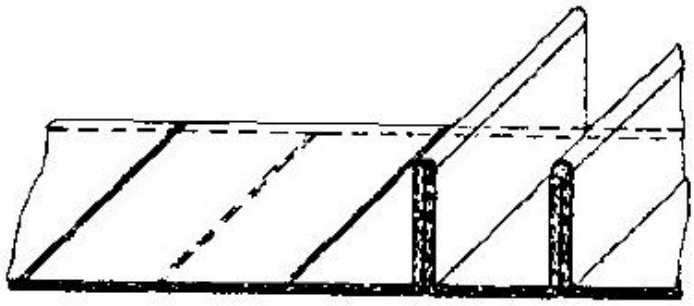

Informative references

Attention is drawn to the following places, which may be of interest for search:

Formed by two parallel panels located in the base of a tray being folded up towards each other	B65D 5/48022

B65D 5/48044

[N: Blank provided with cut flaps folded perpendicular to the blank (B65D 5/48026 takes precedence)]

Definition statement

This subclass/group covers:

Illustrative example of subject matter classified in this group:

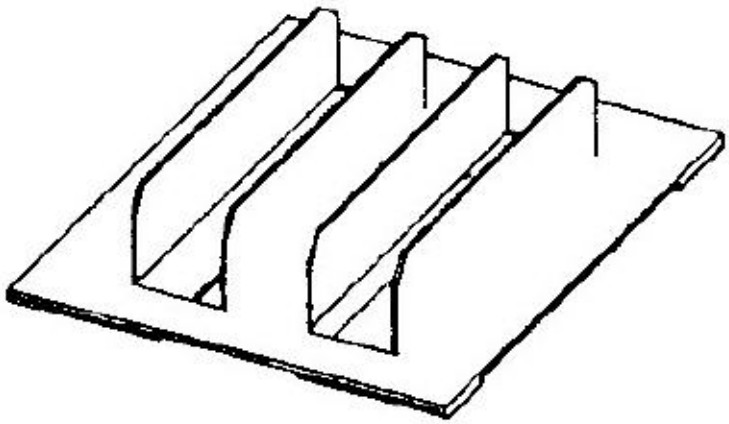

References relevant to classification in this group

This subclass/group does not cover:

Squaring or like elements	B65D 5/48026

B65D 5/48046

[N: Plain strips not fixed by gluing or other fastening elements (B65D 5/48048 takes precedence)]

Definition statement

This subclass/group covers:

Illustrative example of subject matter classified in this group:

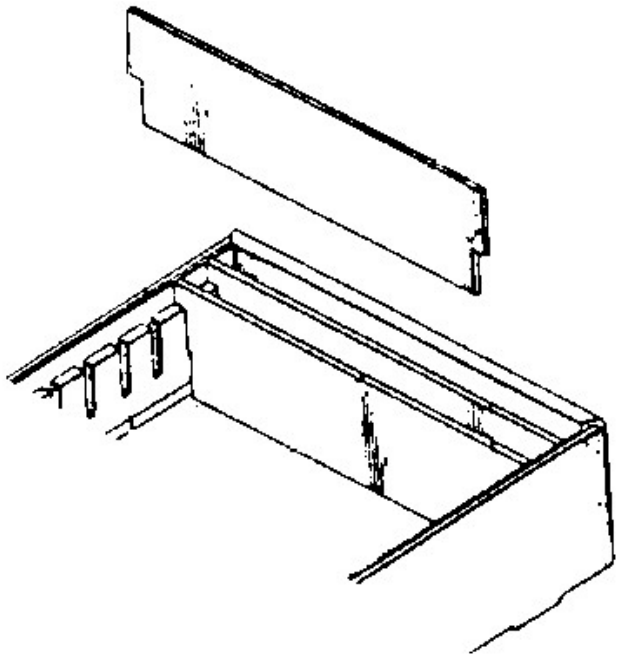

References relevant to classification in this group

This subclass/group does not cover:

Single partition formed by folding one or more blanks and provided with flaps fixed to or maintained by parts of the container body	B65D 5/48048

B65D 5/48048

[N: Single partition formed by folding one or more blanks and provided with flaps fixed to or maintained by parts of the

container body (B65D 5/4804 takes precedence)]

Definition statement

This subclass/group covers:

Illustrative example of subject matter classified in this group:

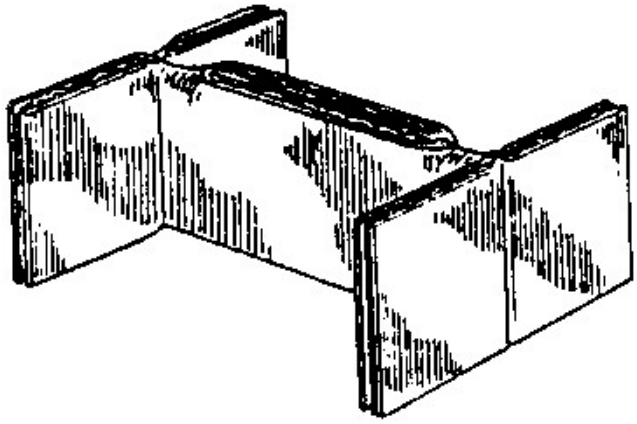

References relevant to classification in this group

This subclass/group does not cover:

Formed by folding strips essentially in tubes	B65D 5/4804

B65D 5/5004

[N: formed as an extension of the end closures (hollow or recessed end closures B65D 5/0245)]

Definition statement

This subclass/group covers:

Illustrative example of subject matter classified in this group:

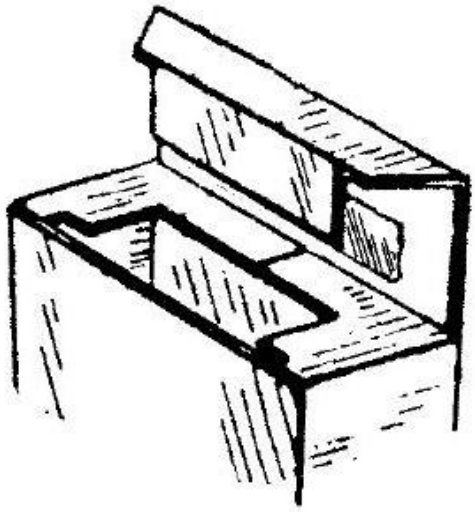

B65D 5/5007

[N: formed by inwardly protruding of folded parts of the body]

Definition statement

This subclass/group covers:
Illustrative example of subject matter classified in this group:

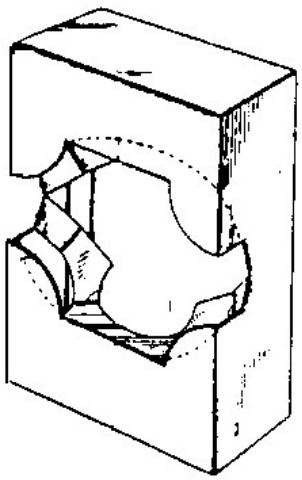

B65D 5/5009

[N: in combination with the end closures or extensions thereof]

Definition statement

This subclass/group covers:
Illustrative example of subject matter classified in this group:

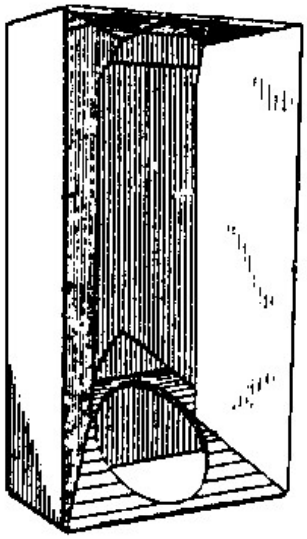

B65D 5/5011

[N: formed by folding inwardly of extensions hinged to the upper or lower edges of the body]

Definition statement

This subclass/group covers:

Illustrative example of subject matter classified in this group:

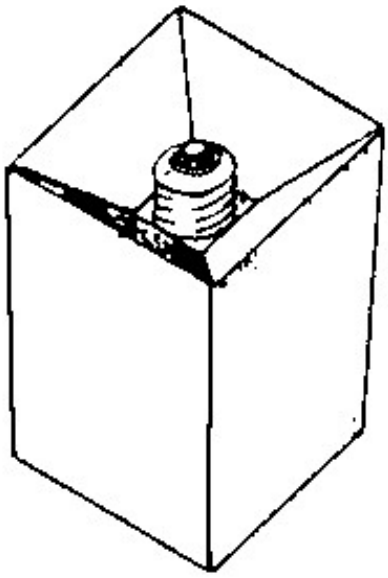

References relevant to classification in this group

This subclass/group does not cover:

Formed as an extension of the end closures	B65D 5/5004

Informative references

Attention is drawn to the following places, which may be of interest for search:

With end closures formed by inward-folding of self-locking flaps hinged to tubular body	B65D 5/10
Sleeves	B65D 59/04

B65D 5/5014

[N: and with an integral end closure (B65D 5/5004 takes precedence)]

Definition statement

This subclass/group covers:

Illustrative example of subject matter classified in this group:

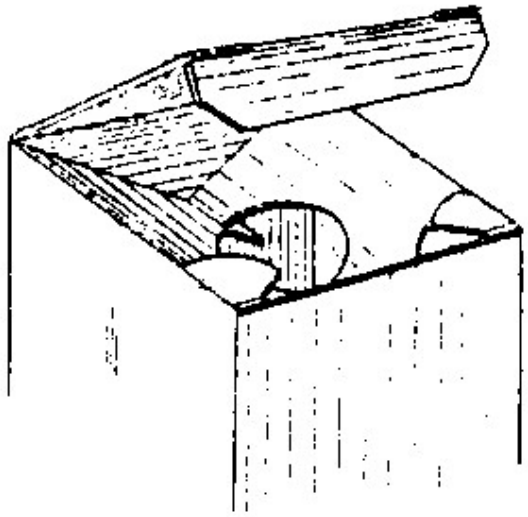

References relevant to classification in this group

This subclass/group does not cover:

Formed as an extension of the end closures	B65D 5/5004

B65D 5/5016

[N: formed by folding inwardly of extensions hinged to the side edges of the body]

Definition statement

This subclass/group covers:

Illustrative example of subject matter classified in this group:

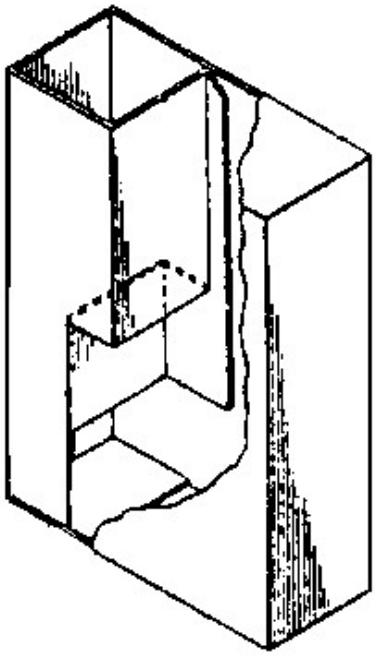

Informative references

Attention is drawn to the following places, which may be of interest for search:

Formed by folding extension hinged to the side edges of a tubular body	B65D 5/48014

B65D 5/5019

[N: formed by openings in the body walls]

Definition statement

This subclass/group covers:

Illustrative example of subject matter classified in this group:

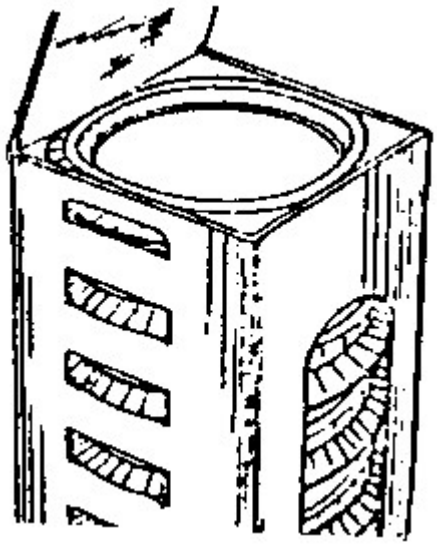

Informative references

Attention is drawn to the following places, which may be of interest for search:

With end closures formed by inward-folding of portions of body	B65D 5/08

B65D 5/5021

[N: Integral elements for containers formed by folding-up portions connected to a central panel from all sides]

Definition statement

This subclass/group covers:

Illustrative example of subject matter classified in this group:

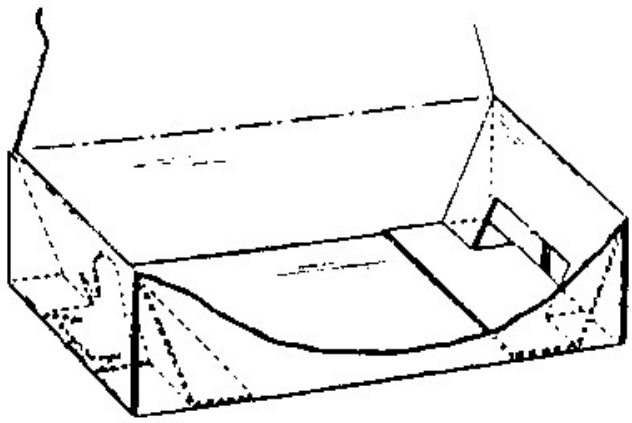

B65D 5/5023

[N: Integral elements for containers of other type, e.g. formed by folding a blank to U-shape]

Definition statement

This subclass/group covers:
Illustrative example of subject matter classified in this group:

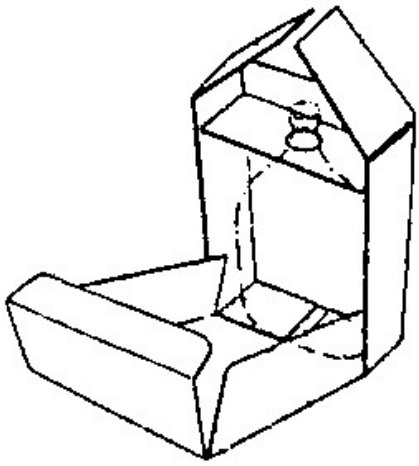

B65D 5/5026

[N: Hollow frame-like elements surrounding the object]

Definition statement

This subclass/group covers:
Illustrative example of subject matter classified in this group:

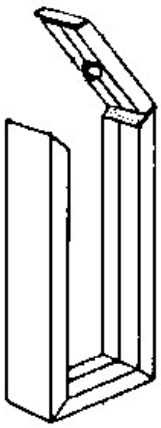

B65D 5/5028

[N: Elements formed separately from the container body]

Informative references

Attention is drawn to the following places, which may be of interest for search:

Devices to locate articles in containers	B65D 25/10
Elements or devices for locating or protecting articles	B65D 77/26
Using resilient suspension means	B65D 81/07

B65D 5/503

[N: Tray-like elements formed in one piece (formed by folding a blank B65D 5/5038)]

Definition statement

This subclass/group covers:

Illustrative example of subject matter classified in this group:

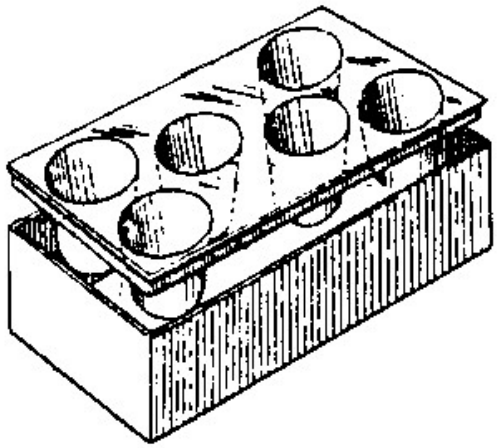

Informative references

Attention is drawn to the following places, which may be of interest for search:

Trays or like shallow containers with moulded compartments or partitions	B65D 1/36
The inner container being a tray or like shallow container, not formed by folding or erecting one or more blanks	B65D 77/0433
Of a shape specially adapted to	B65D 81/133

accommodate contents	

B65D 5/5033

[N: Corner pads or corner posts]

Definition statement

This subclass/group covers:
Illustrative example of subject matter classified in this group:

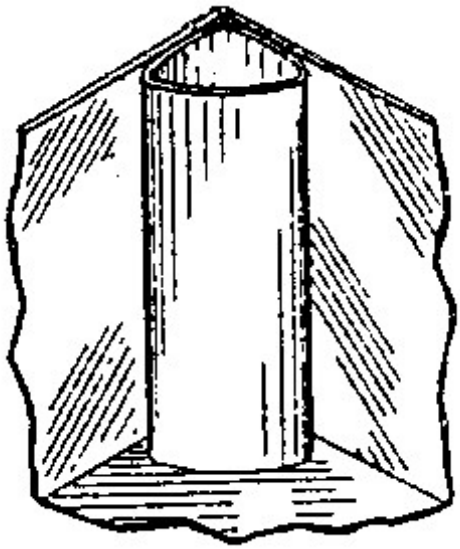

Informative references

Attention is drawn to the following places, which may be of interest for search:

Reinforcements formed separately from the container	B65D 5/445
Specially adapted to protect contents from mechanical damage	B65D 81/02
Corner, edge or end protectors	B65D 81/053

B65D 5/5035

[N: Paper elements (in combination with wooden elements B65D 5/5095)]

References relevant to classification in this group

This subclass/group does not cover:

Internal heat-shrinkable sheets for maintaining the contents	B65D 5/5028

Informative references

Attention is drawn to the following places, which may be of interest for search:

Maintaining contents at spaced relation from package walls, or from other contents	B65D 81/05

B65D 5/5038

[N: Tray-like elements formed by folding a blank and presenting openings or recesses (without external box B65D71/00E1; external face of container provided with opening for receiving object in display position B65D 5/5286)]

Definition statement

This subclass/group covers:

Illustrative example of subject matter classified in this group:

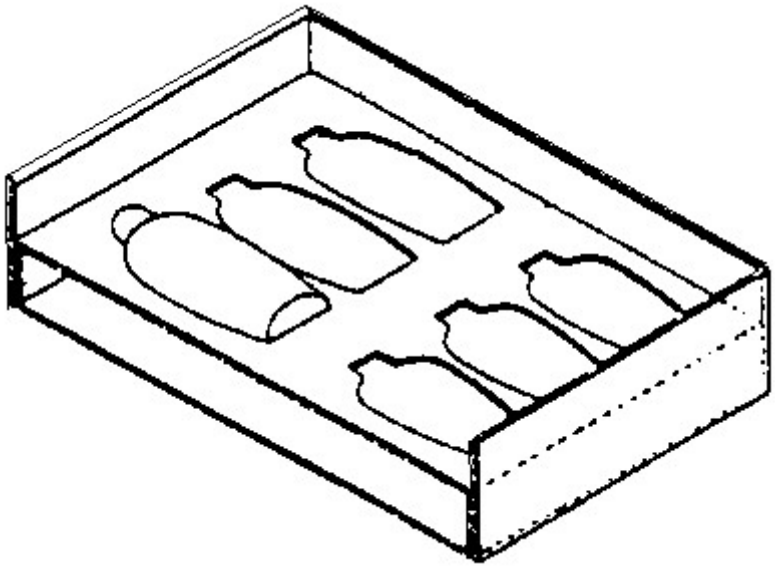

Informative references

Attention is drawn to the following places, which may be of interest for search:

Devices e.g. plates	B65D 25/108

B65D 5/504

[N: Racks having upstanding ridges formed by folds, and provided with slits or recesses]

Definition statement

This subclass/group covers:

Illustrative example of subject matter classified in this group:

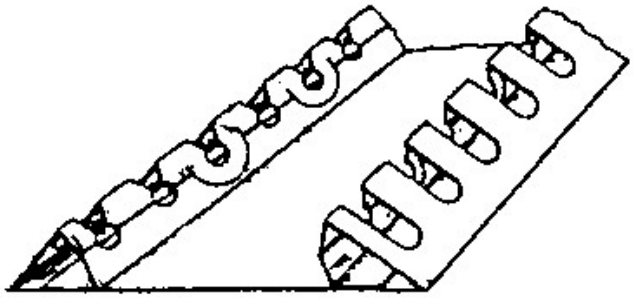

Informative references

Attention is drawn to the following places, which may be of interest for search:

Integral elements for containers formed by folding-up portions connected to a central panel from all sides	B65D 5/5021

B65D 5/5042

[N: Hollow tubular elements provided with slits or openings]

Definition statement

This subclass/group covers:

DELETED: Transferred to B65D 5/5052

B65D 5/5045

[N: Tubular lining and supporting elements]

Definition statement

This subclass/group covers:

Illustrative example of subject matter classified in this group:

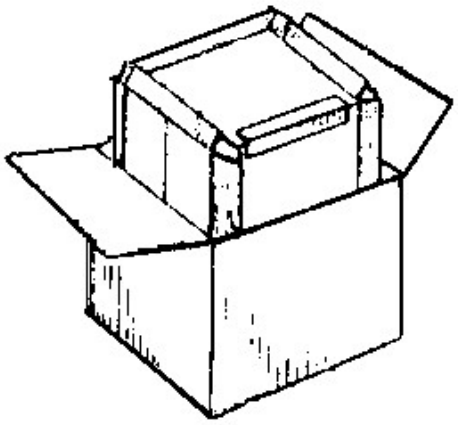

References relevant to classification in this group

This subclass/group does not cover:

Edge or corner protectors	B65D 81/053

B65D 5/505

[N: formed by folding up one or more blanks to form a hollow block]

Definition statement

This subclass/group covers:

Illustrative example of subject matter classified in this group:

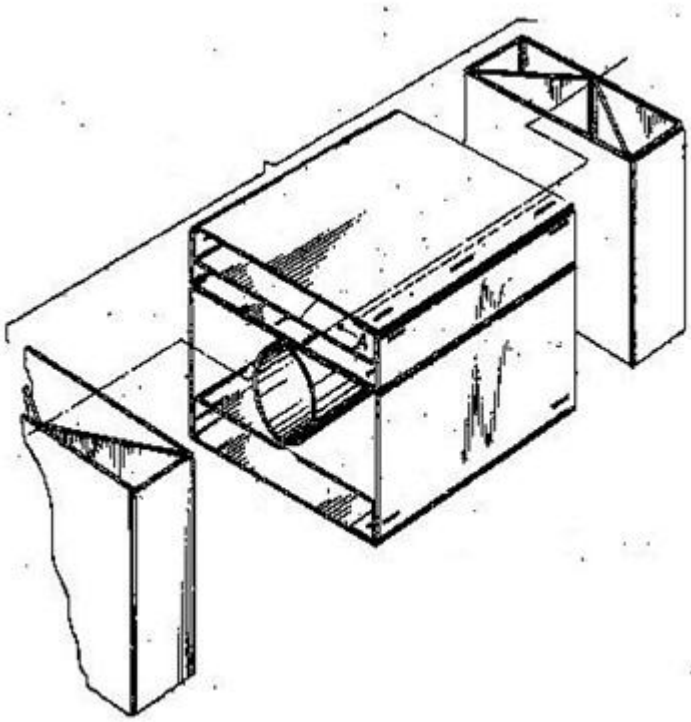

B65D 5/5052

[N: and provided with slits or recesses in which at least a part of the contents are located (B65D 5/504 takes precedence)]

Definition statement

This subclass/group covers:

Illustrative example of subject matter classified in this group:

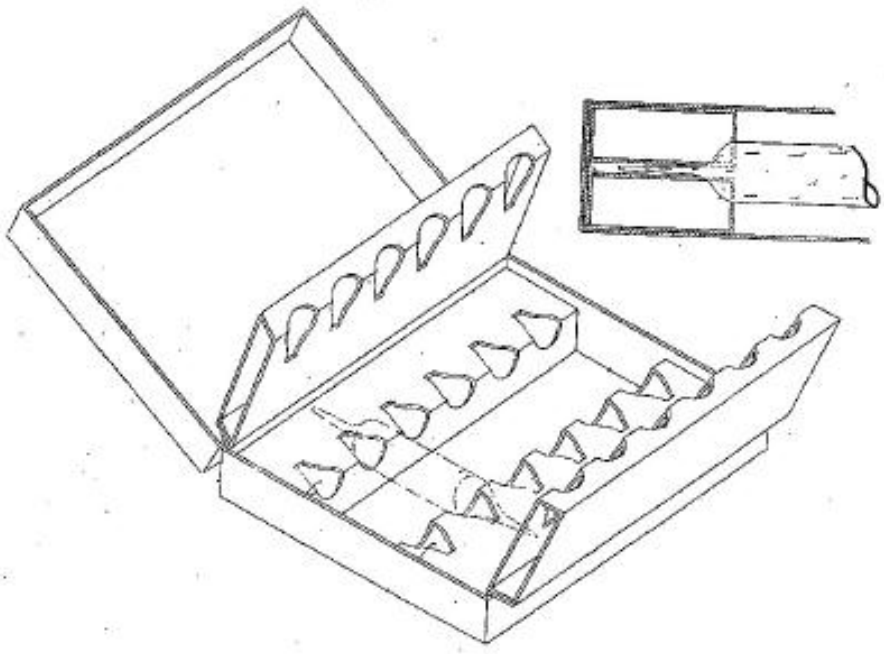

References relevant to classification in this group

This subclass/group does not cover:

Racks having upstanding ridges formed by folds, and provided with slits or recesses	B65D 5/504

B65D 5/5054

[N: formed by a plurality of layers contacting each other, e.g. multiple layers of corrugated cardboard]

Definition statement

This subclass/group covers:

Illustrative example of subject matter classified in this group:

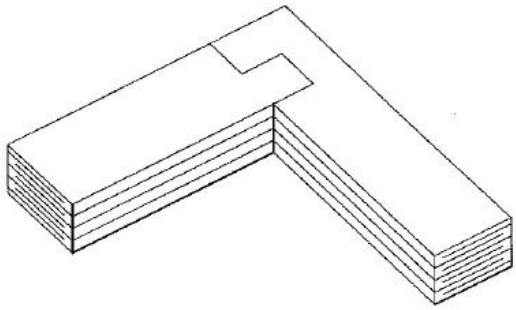

B65D 5/5057

[N: and provided with slits or recesses in which at least a part of the contents are located]

Definition statement

This subclass/group covers:

Illustrative example of subject matter classified in this group:

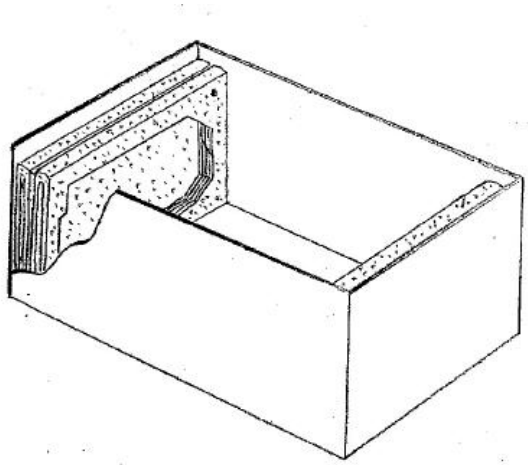

B65D 5/5059

[N: Paper panels presenting one or more openings or recesses in which at least a part of the contents are located (B65D 5/5038, B65D 5/5052, B65D 5/5057 and B65D 5/5286 take precedence)]

Definition statement

This subclass/group covers:

Illustrative example of subject matter classified in this group:

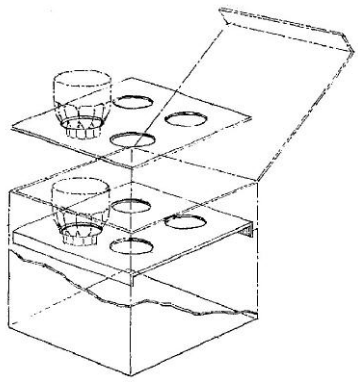

References relevant to classification in this group

This subclass/group does not cover:

Tray-like elements formed by folding a black and presenting openings or recesses	B65D 5/5038
Provided with slits or recesses in which at least a part of the contents are located	B65D 5/5052

Provided with slits or recesses in which at least a part of the contents are located	B65D 5/5057
The container being provided with an opening or weakened area in which an item is inserted	B65D 5/5286

B65D 5/5061

[N: the openings or recesses being located in different panels of a single blank (B65D 5/5066 takes precedence)]

Definition statement

This subclass/group covers:

Illustrative example of subject matter classified in this group:

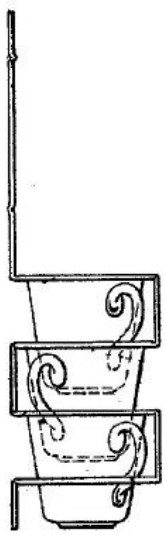

References relevant to classification in this group

This subclass/group does not cover:

Paper elements formed by folding or assembling two or more panels to create a central aperture extending in at least two planes in which the contents are located	B65D 5/5066

B65D 5/5064

[N: Inverted U- or V-shaped paper elements provided with slits or recesses in which at least a part of the contents are located (B65D 5/504 and B65D 5/5052 takes precedence)]

Definition statement

This subclass/group covers:

Illustrative example of subject matter classified in this group:

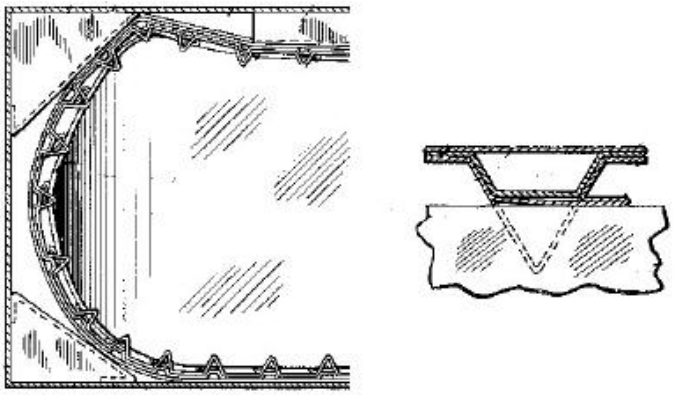

References relevant to classification in this group

This subclass/group does not cover:

Racks having upstanding ridges formed by fold, and provided with slits and recesses	B65D 5/504
Provided with slits or recesses in which at least a part of the contents are located	B65D 5/5052

B65D 5/5066

[N: Paper elements formed by folding or assembling two or more panels to create a central aperture extending in at least two planes in which the contents are located]

Definition statement

This subclass/group covers:

Illustrative example of subject matter classified in this group:

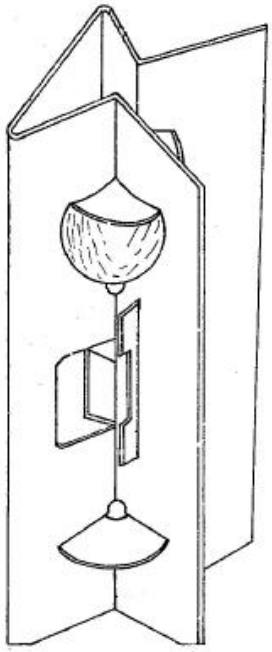

B65D 5/5069

[N: Capping elements, i.e. elements which are located onto one or more ends of the contents, before the contents are inserted into the package]

Definition statement

This subclass/group covers:

Illustrative example of subject matter classified in this group:

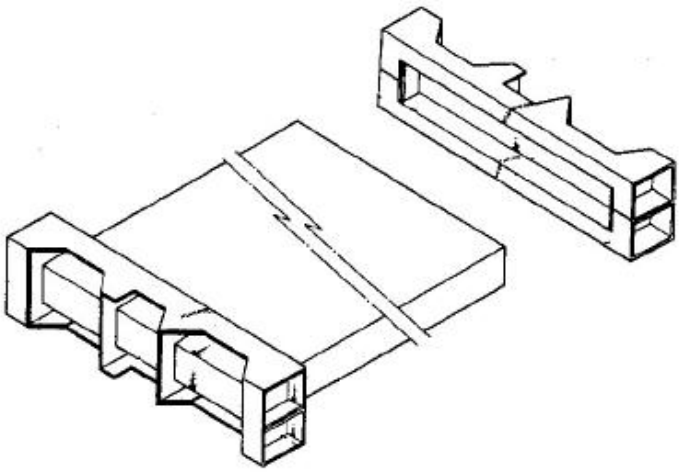

B65D 5/5071

[N: each capping element being formed by assembling two or

more blanks]

Definition statement

This subclass/group covers:
Illustrative example of subject matter classified in this group:

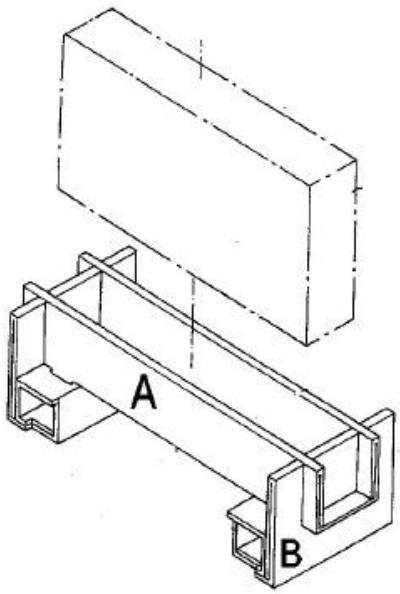

B65D 5/5073

[N: U-shaped elements supporting the articles locally at their sides]

Definition statement

This subclass/group covers:
Illustrative example of subject matter classified in this group:

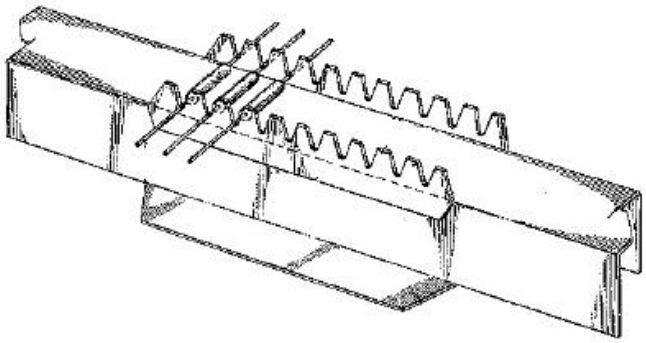

B65D 5/5076

[N: U-shaped elements supporting the articles along substantially their whole length, e.g. a cradle (B65D 5/508 takes precedence)]

Definition statement

This subclass/group covers:

Illustrative example of subject matter classified in this group:

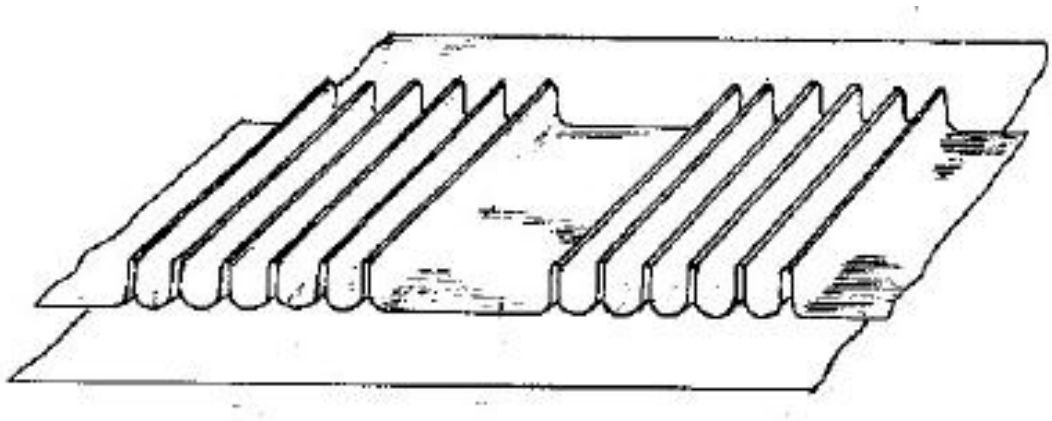

References relevant to classification in this group

This subclass/group does not cover:

Combination of U-shaped and inverted U-shaped elements	B65D 5/508

B65D 5/5078

[N: Pockets whereby the articles are inserted into the pockets, e.g. inverted U-shaped elements (B65D 5/508 takes precedence)] [N0502]

Definition statement

This subclass/group covers:

Illustrative example of subject matter classified in this group:

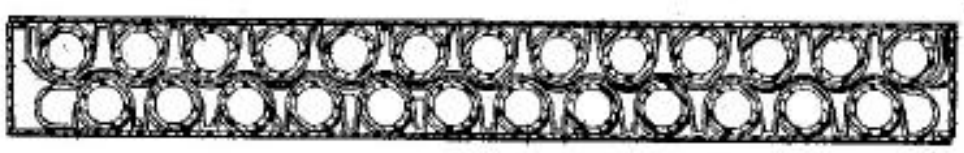

References relevant to classification in this group

This subclass/group does not cover:

Combination of U-shaped and inverted U-shaped elements	B65D/50D4Q

B65D 5/508

[N: Combination of U-shaped and inverted U-shaped elements]

Definition statement

This subclass/group covers:

Illustrative example of subject matter classified in this group:



B65D 5/5083

[N: each item being partially located in a U-shaped element and partially located in an inverted U-shaped element, e.g. for bottles]

Definition statement

This subclass/group covers:

Illustrative example of subject matter classified in this group:

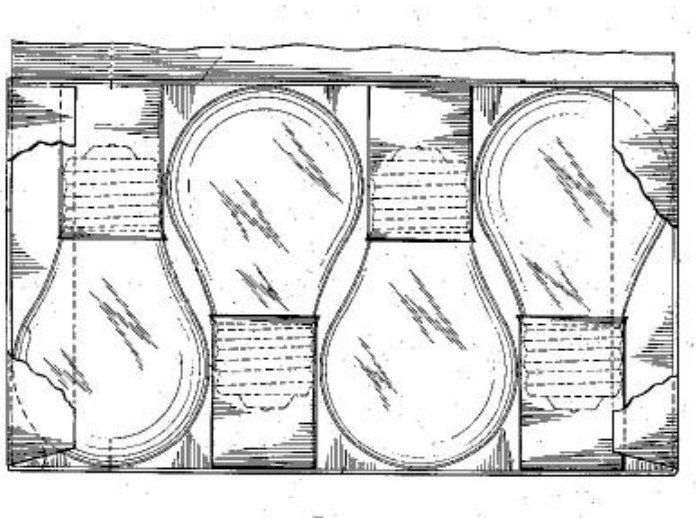

B65D 5/5085

[N: the elements forming grooves, ribs, or the like, situated on opposed walls and between which the articles are located (for rigid containers B65D 25/107)]

Definition statement

This subclass/group covers:

Illustrative example of subject matter classified in this group:

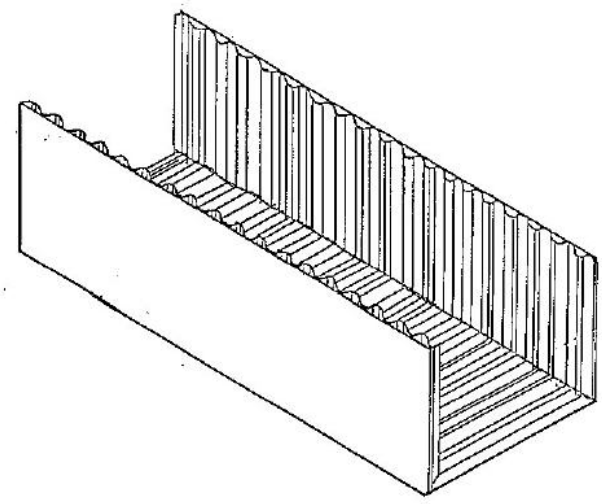

B65D 5/5088

[N: Plastic elements (trays B65D 5/503)]

Definition statement

This subclass/group covers:

Illustrative example of subject matter classified in this group:

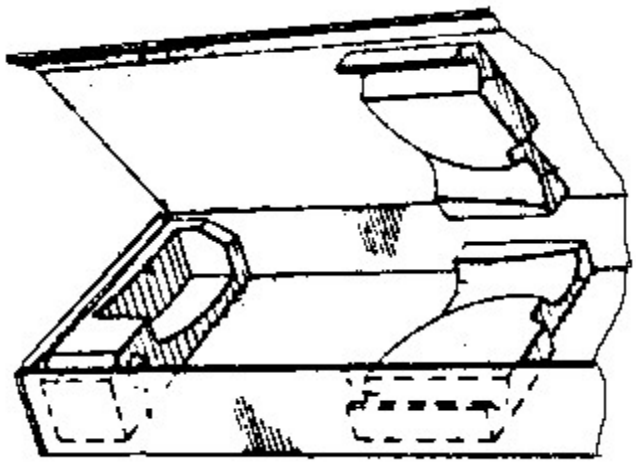

B65D 5/509

[N: Foam plastic elements]

Definition statement

This subclass/group covers:
Illustrative example of subject matter classified in this group:

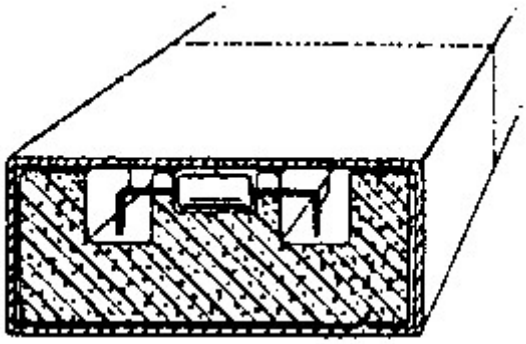

B65D 5/5092

[N: Wooden elements]

Definition statement

This subclass/group covers:
Illustrative example of subject matter classified in this group:

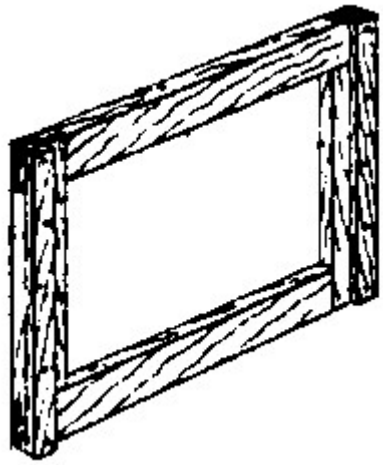

B65D 5/5095

[N: Wooden elements in combination with paper elements]

Definition statement

This subclass/group covers:
Illustrative example of subject matter classified in this group:

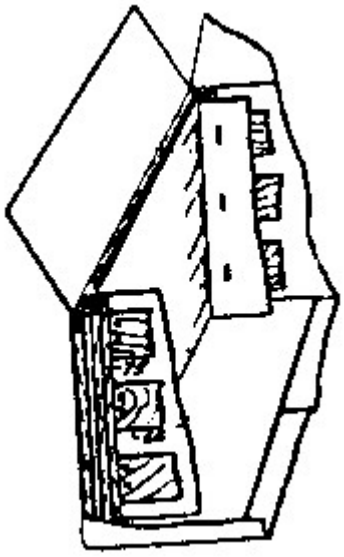

B65D 5/5097

[N: Central hubs or shafts]

Definition statement

This subclass/group covers:
Illustrative example of subject matter classified in this group:

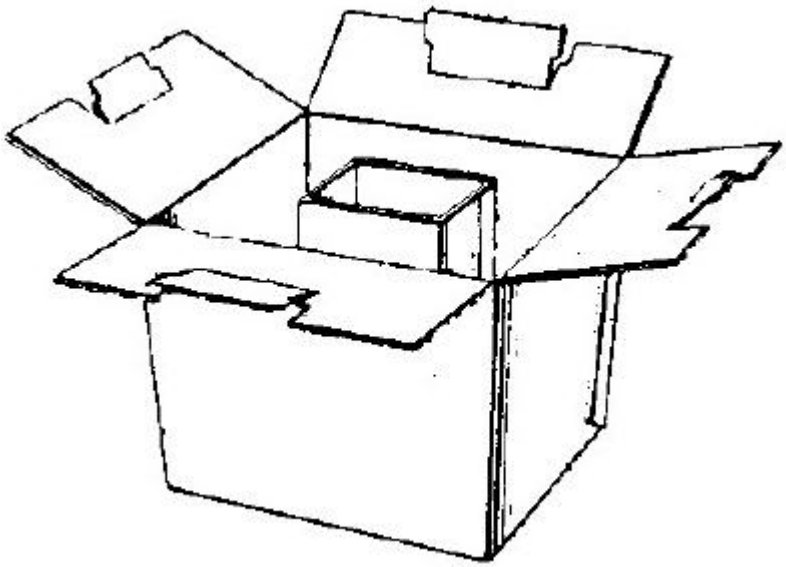

B65D 5/52

External stands or display elements for contents [N: (adjustable or foldable display stands made of cardboard, paper or the like, without packaging function A47F 5/11)]

Definition statement

This subclass/group covers:

Illustrative example of subject matter classified in this group:

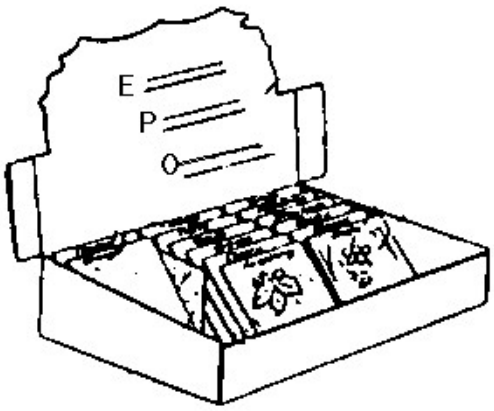

B65D 5/5206

[N: External stands for supporting the container in display position, e.g. easels, covers forming a support for the containers in the display position]

Definition statement

This subclass/group covers:
Illustrative example of subject matter classified in this group:

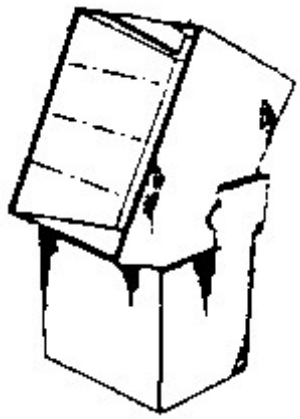

B65D 5/5213

[N: Internal elements supporting the contents and movable for displaying them, e.g. movable bottoms or trays]

Definition statement

This subclass/group covers:
Illustrative example of subject matter classified in this group:

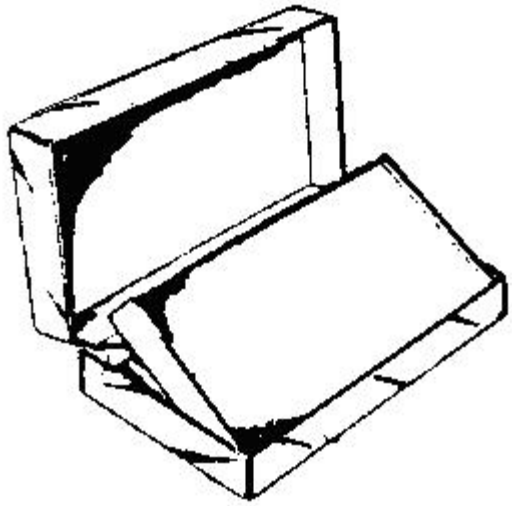

B65D 5/5226

[N: formed integrally with the container or lid (B65D 5/526 takes precedence)]

References relevant to classification in this group

This subclass/group does not cover:

Containers with means for displaying items at different heights	B65D 5/526

B65D 5/5233

[N: Display panels located within the upper surface of the container and being raised to simultaneously provide a dispensing opening]

Definition statement

This subclass/group covers:

Panels with means for maintaining them in the raised, display position

Illustrative example of subject matter classified in this group:

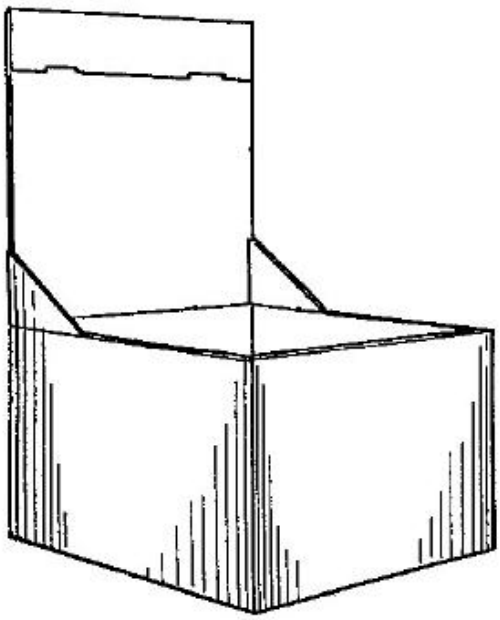

B65D 5/524

[N: the panel in the raised position being folded about itself]

Definition statement

This subclass/group covers:

Illustrative example of subject matter classified in this group:

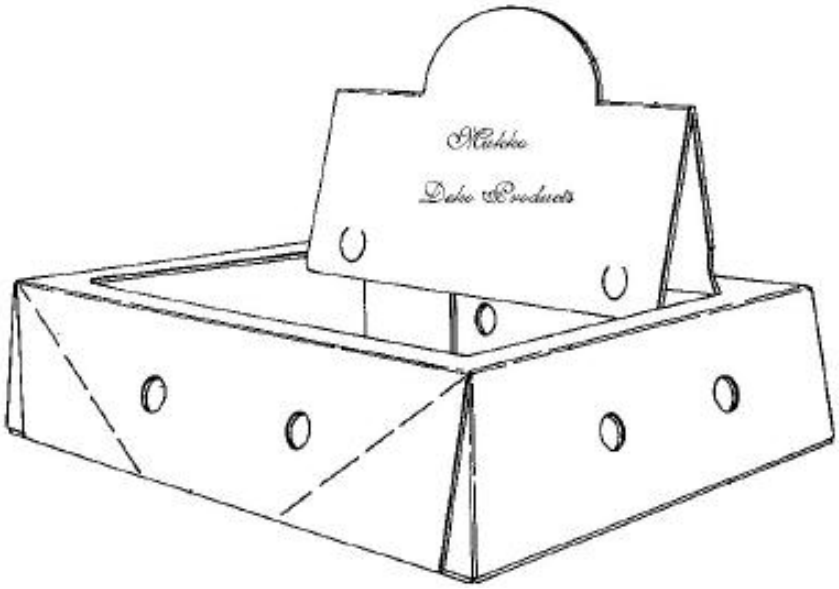

B65D 5/5246

[N: formed separately from the container or lid]

Definition statement

This subclass/group covers:
Illustrative example of subject matter classified in this group:

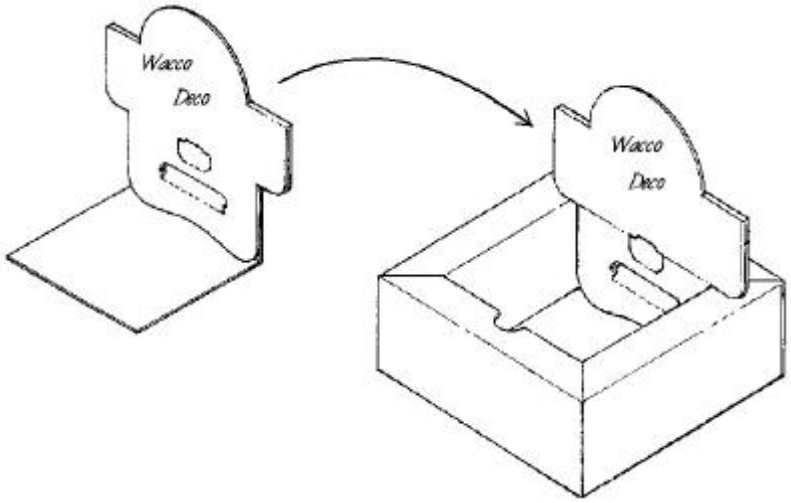

B65D 5/5253

[N: Containers initially closed but folded about a central axis to display the contents in two or more cells]

Definition statement

This subclass/group covers:
Illustrative example of subject matter classified in this group:

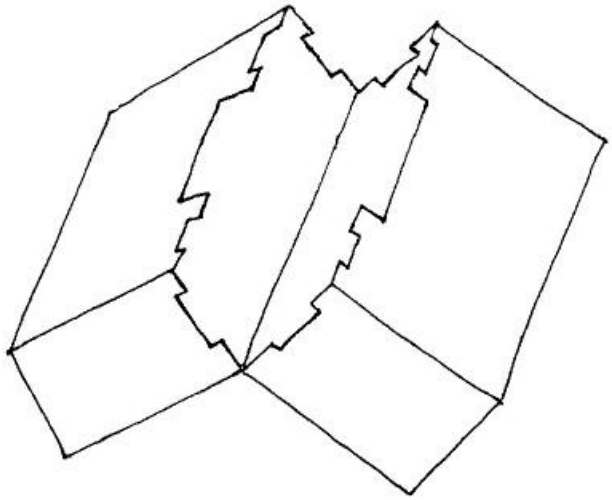

B65D 5/526

[N: Containers with means for displaying items at different heights]

Definition statement

This subclass/group covers:
Illustrative example of subject matter classified in this group:

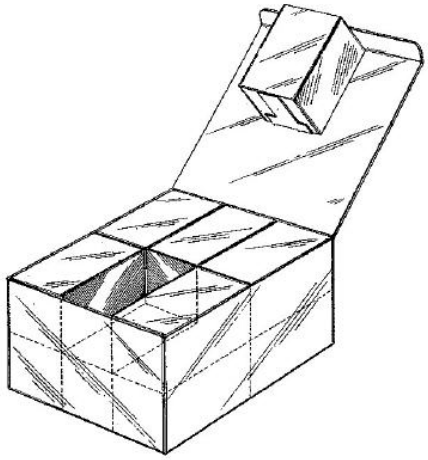

B65D 5/5266

[N: in tiered or stepped relationship (B65D 5/5206 takes precedence)]

Definition statement

This subclass/group covers:

Illustrative example of subject matter classified in this group:

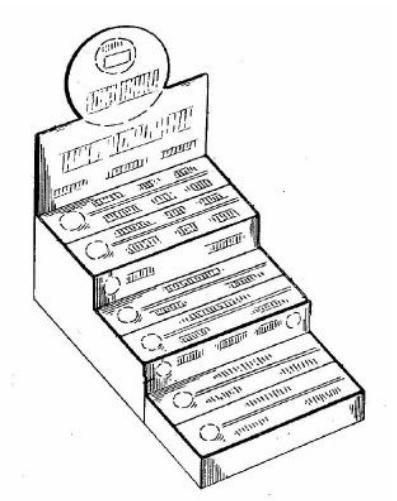

References relevant to classification in this group

This subclass/group does not cover:

External strands for supporting the container in display position	B65D 5/5206

B65D 5/5273

[N: Containers provided with an inclined surface on which the contents are located (B65D 5/5213, B65D 5/5266 take precedence)] [N0008]

Definition statement

This subclass/group covers:

Illustrative example of subject matter classified in this group:

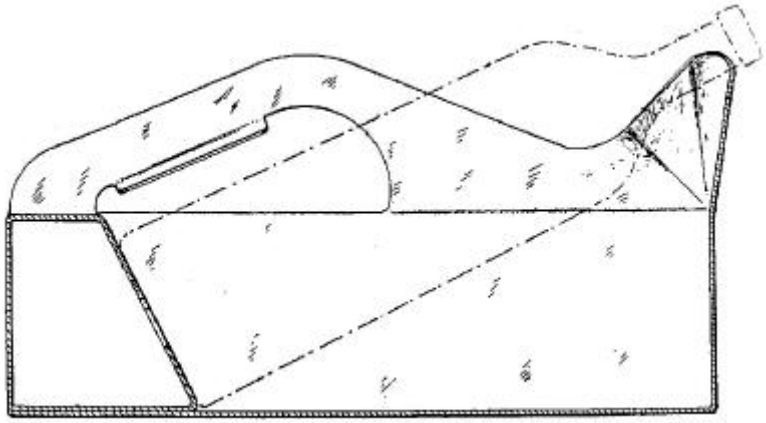

References relevant to classification in this group

This subclass/group does not cover:

Internal elements supporting the contents and movable for displaying them	B65D 5/5213
In tiered or stepped relationship	B65D 5/5266

B65D 5/528

[N: Contents attached to or resting on the external surface of the container]

Definition statement

This subclass/group covers:

Illustrative example of subject matter classified in this group:

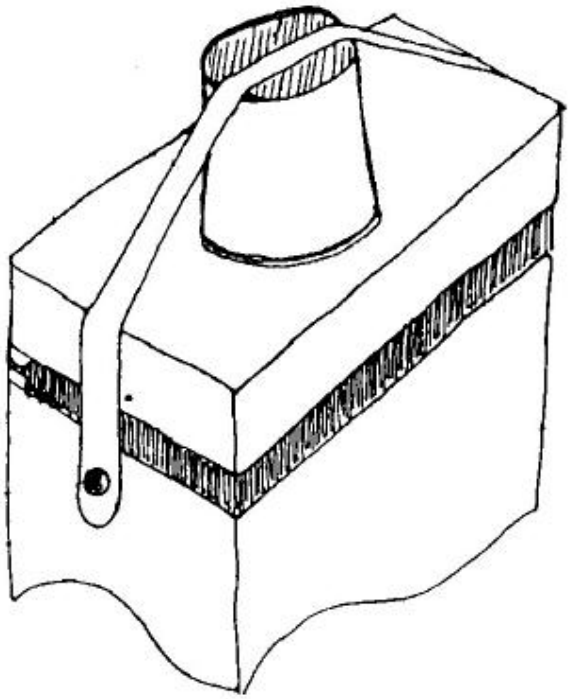

B65D 5/5286

[N: the container being provided with an opening or weakened area in which an item is inserted]

Definition statement

This subclass/group covers:

Illustrative example of subject matter classified in this group:

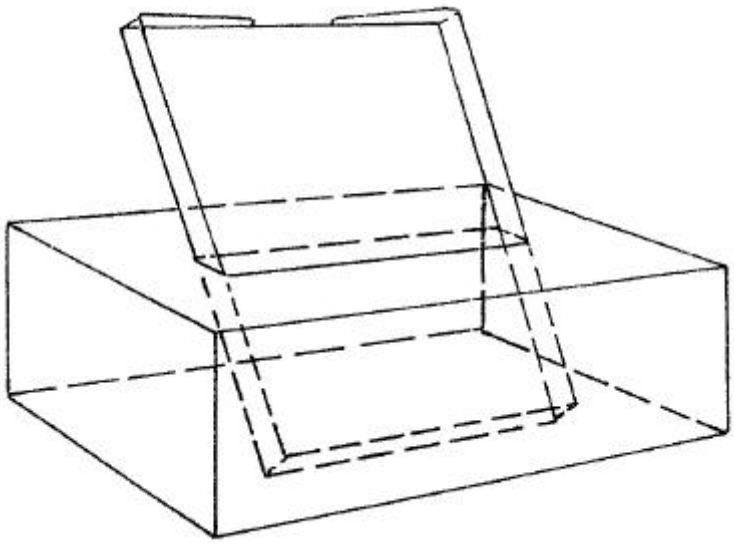

B65D 5/5293

[N: the container being provided with U- or V-shaped racks on which the items rest]

Definition statement

This subclass/group covers:

Illustrative example of subject matter classified in this group:

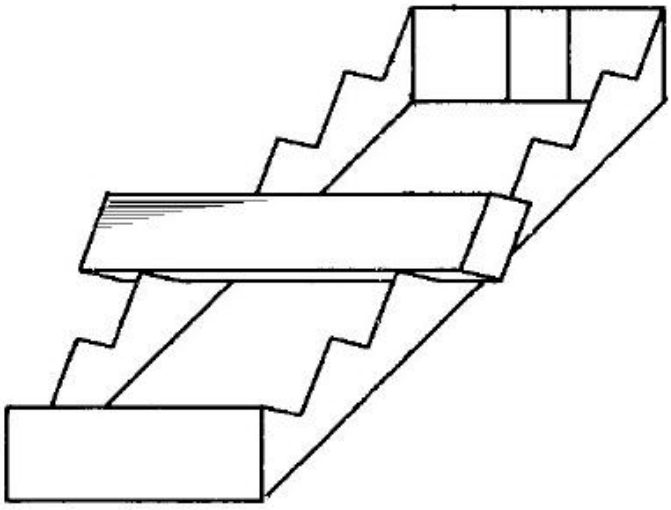

B65D 5/54

Lines of weakness to facilitate opening of container or dividing it into separate parts by cutting or tearing ([N: B65D 5/06, B65D 5/5233, B65D 5/5253 take precedence]; break-in flaps, or members adapted to be torn-off, to provide pouring openings B65D 5/70)

References relevant to classification in this group

This subclass/group does not cover:

With end-closing or contents-supporting elements formed by folding inwardly a wall extending from, and continuously around, an end of the tubular body	B65D 5/06
Tear strips for other purposes	B65D 5/4266
Display panels located within the upper surface of the container and being raised to simultaneously provide a dispensing opening	B65D 5/5233

Containers initially closed but folded about a central axis to display the contents in two or more cells	B65D 5/5253

B65D 5/541

[N: the lines of weakness being provided in one or more closure flaps]

Definition statement

This subclass/group covers:

Illustrative example of subject matter classified in this group:

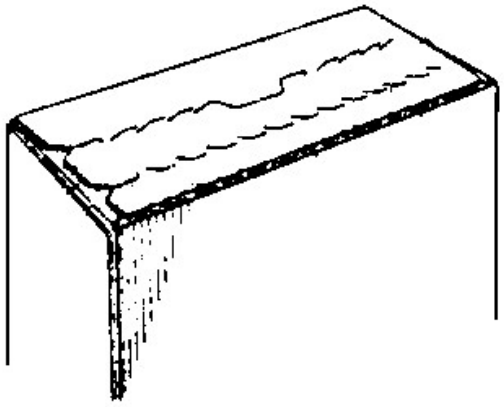

B65D 5/5415

[N: the lines of weakness being provided in one or more closure flaps and in the container body so as to form after rupture a lid hinged to a side edge of the container body]

Definition statement

This subclass/group covers:

Illustrative example of subject matter classified in this group:

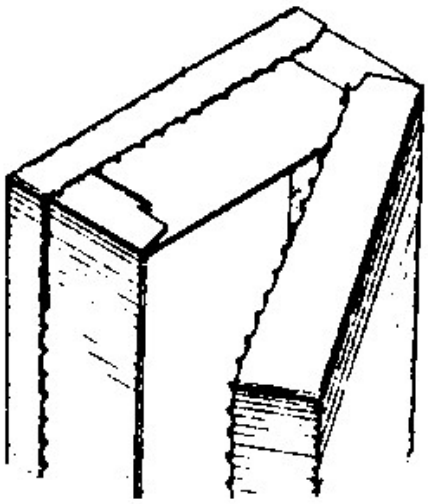

Informative references

Attention is drawn to the following places, which may be of interest for search:

The lines of weakness being provided in an extension panel or tab of a hinged closure	B65D 5/546

B65D 5/542

[N: the lines of weakness being provided in the container body]

Definition statement

This subclass/group covers:

Illustrative example of subject matter classified in this group:

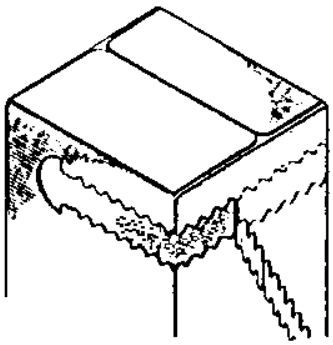

B65D 5/5425

[N: and defining after rupture a lid hinged to the upper edge of the container body]

Definition statement

This subclass/group covers:

Illustrative example of subject matter classified in this group:

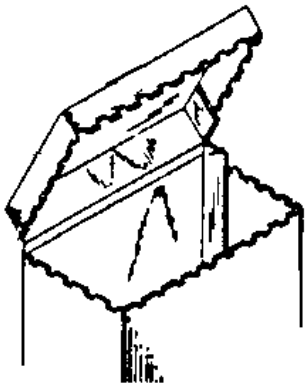

Informative references

Attention is drawn to the following places, which may be of interest for search:

Containers formed by erecting a rigid or semi-rigid blank	B65D 85/1036

B65D 5/543

[N: the container being provided with an internal frame or the like for maintaining the lid in the closed position by friction]

Definition statement

This subclass/group covers:

Illustrative example of subject matter classified in this group:

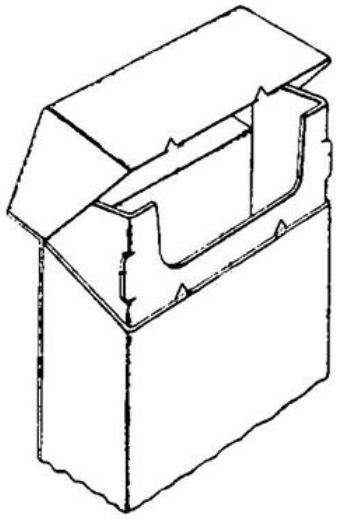

Informative references

Attention is drawn to the following places, which may be of interest for search:

For opening containers formed by erecting a "cross-like" blank, the container being provided with an internal frame or the like for maintaining the lid in the closed position by friction	B65D 5/5465
For opening containers formed by erecting a blank to U-shape, the container being provided with an internal frame or the like for maintaining the lid in the closed position by friction	B65D 5/5485
Linings made of relatively rigid sheet material	B65D 5/566
Formed by folding one or more extensions hinged to the upper edge of a tubular container body, the container being provided with an internal frame or the like for maintaining the lid in the closed position by friction	B65D 5/662
Formed by folding extensions of a side panel of a container body formed by erecting a "cross-like" blank, the container being provided with an	B65D 5/6679

internal frame or the like for maintaining the lid in the closed position by friction	
Formed by extensions hinged to the upper edge of a container body formed by erecting a blank to U-shape, the container being provided with an internal frame or the like for maintaining the lid in the closed position by friction	B65D 5/6691

B65D 5/5435

[N: and defining after rupture a lid hinged to the side edge of the container body]

Definition statement

This subclass/group covers:

Illustrative example of subject matter classified in this group:

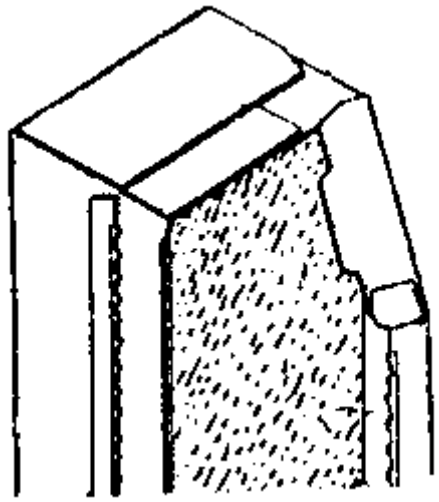

B65D 5/544

[N: and defining after rupture a lid hinged about a line located in the top surface of the container]

Definition statement

This subclass/group covers:

Illustrative example of subject matter classified in this group:

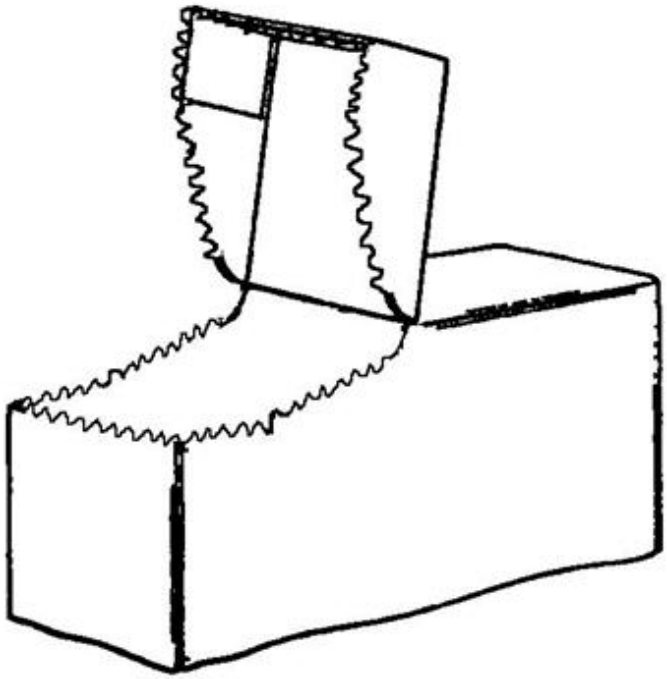

Informative references

Attention is drawn to the following places, which may be of interest for search:

For opening containers formed by erecting a "cross-like" blank and defining after rupture a lid hinged about a line located in the top surface of the container	B65D 5/547
For opening containers formed by erecting a blank to U-shape and defining after rupture a lid hinged about a line located in the top surface of the container	B65D 5/549
Formed by folding one or more extensions hinged to the upper edge of a tubular container body, the lid being hinged about a line located in the top surface of the container	B65D 5/6623
Formed by folding extensions of a side panel of a container body formed by erecting a "cross-like" blank, the lid being hinged about a line located in	B65D 5/6682

the top surface of the container	
Formed by extensions hinged to the upper edge of a container body formed by erecting a blank to U-shape, the lid being hinged about a line located in the top surface of the container	B65D 5/6694

B65D 5/5445

[N: for dividing a tubular body into separate parts]

Definition statement

This subclass/group covers:

Illustrative example of subject matter classified in this group:

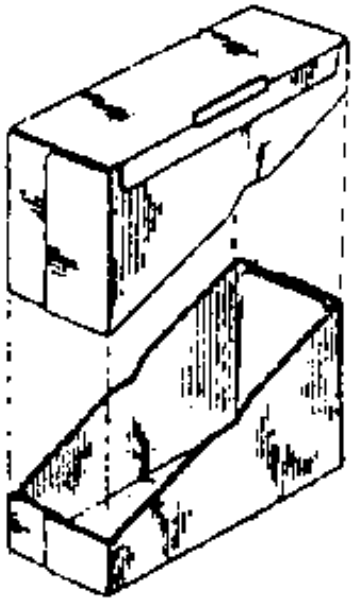

B65D 5/5455

[N: the lines of weakness being provided in a closure hinged to an edge of the container body]

Definition statement

This subclass/group covers:

Illustrative example of subject matter classified in this group:

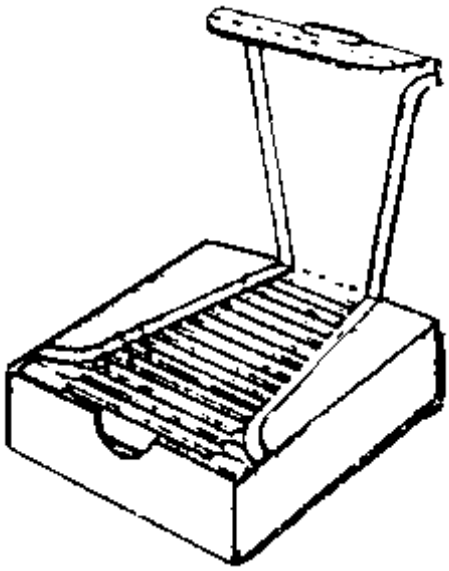

Informative references

Attention is drawn to the following places, which may be of interest for search:

Containers formed by erecting a rigid or semi-rigid blank	B65D 85/1036

B65D 5/546

[N: the lines of weakness being provided in an extension panel or tab of a hinged closure]

Definition statement

This subclass/group covers:

Illustrative example of subject matter classified in this group:

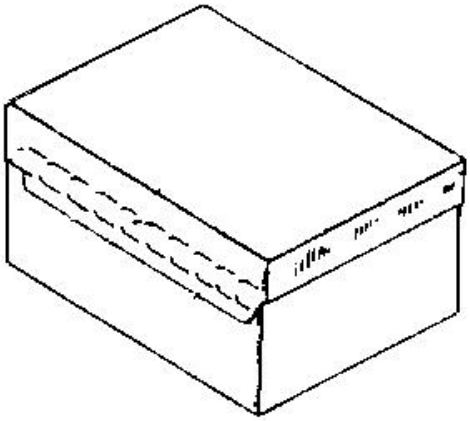

Informative references

Attention is drawn to the following places, which may be of interest for search:

The lines of weakness being provided in one or more closure flaps and in the container body so as to form after rupture a lid hinged to a side edge of the container body	B65D 5/5415

B65D 5/5465

[N: the container being provided with an internal frame or the like for maintaining the lid in the closed position by friction]

Definition statement

This subclass/group covers:

Illustrative example of subject matter classified in this group:

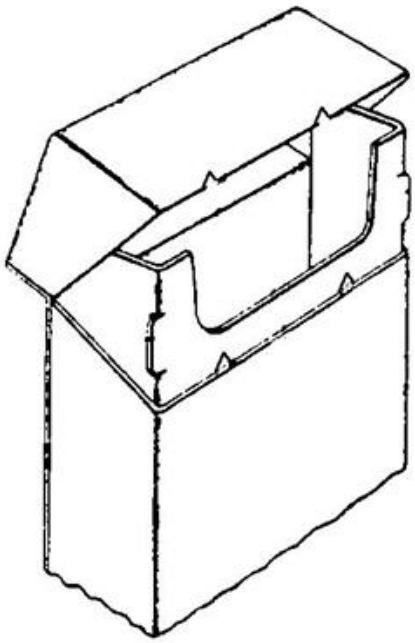

Informative references

Attention is drawn to the following places, which may be of interest for search:

The lines of weakness being provided in the container body, defining after rupture a lid hinged to the upper edge of the container body, the container	B65D 5/543

being provided with an internal frame or the like for maintaining the lid in the closed position by friction	
For opening containers formed by erecting a blank to U-shape, the container being provided with an internal frame or the like for maintaining the lid in the closed position by friction	B65D 5/5485
Formed by folding one or more extensions hinged to the upper edge of a tubular container body, the container being provided with an internal frame or the like for maintaining the lid in the closed position by friction	B65D 5/662
Formed by folding extensions of a side panel of a container body formed by erecting a "cross-like" blank, the container being provided with an internal frame or the like for maintaining the lid in the closed position by friction	B65D 5/6679
Formed by extensions hinged to the upper edge of a container body formed by erecting a blank to U-shape, the container being provided with an internal frame or the like for maintaining the lid in the closed position by friction	B65D 5/6691

B65D 5/547

[N: and defining after rupture a lid hinged about a line located in the top surface of the container]

Definition statement

This subclass/group covers:

Illustrative example of subject matter classified in this group:

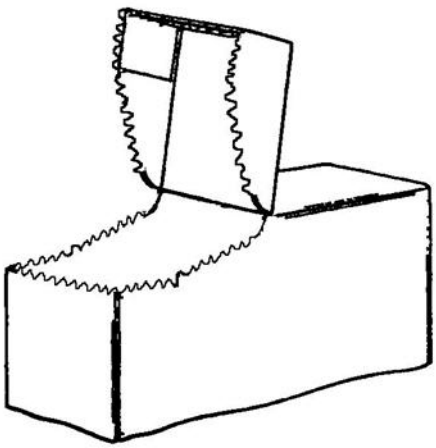

Informative references

Attention is drawn to the following places, which may be of interest for search:

For opening containers formed by erecting a blank in tubular form, the lines of weakness being provided in the container body, and defining after rupture a lid hinged about a line located in the top surface of the container	B65D 5/544
For opening containers formed by erecting a blank to U-shape and defining after rupture a lid hinged about a line located in the top surface of the container	B65D 5/549
Formed by folding one or more extensions hinged to the upper edge of a tubular container body, the lid being hinged about a line located in the top surface of the container	B65D 5/6623
Formed by folding extensions of a side panel of a container body formed by erecting a "cross-like" blank, the lid being hinged about a line located in the top surface of the container	B65D 5/6682
Formed by extensions hinged to the upper edge of a container body formed by erecting a blank to U-shape, the lid being hinged about a line located in the top surface of the	B65D 5/6694

container	

B65D 5/5475

[N: for dividing a "cross-like" container body into separate parts]

Definition statement

This subclass/group covers:
Illustrative example of subject matter classified in this group:

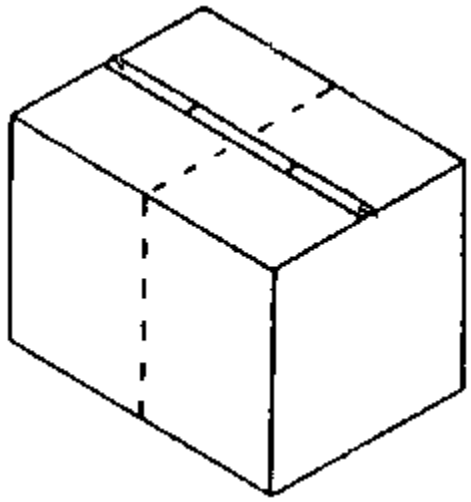

B65D 5/548

[N: for opening containers formed by erecting a blank to U-shape]

Definition statement

This subclass/group covers:
Illustrative example of subject matter classified in this group:

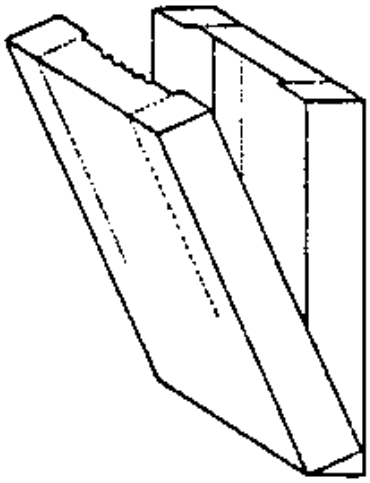

B65D 5/5485

[N: the container being provided with an internal frame or the like for maintaining the lid in the closed position by friction]

Definition statement

This subclass/group covers:

Illustrative example of subject matter classified in this group:

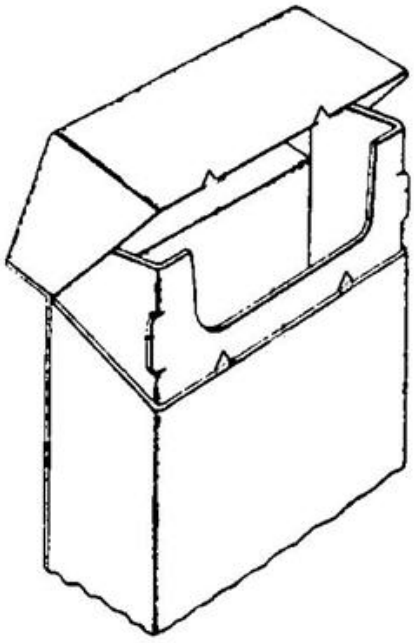

Informative references

Attention is drawn to the following places, which may be of interest for search:

The lines of weakness being provided	B65D 5/543

in the container body, defining after rupture a lid hinged to the upper edge of the container body, the container being provided with an internal frame or the like for maintaining the lid in the closed position by friction	
For opening containers formed by erecting a "cross-like" blank, the container being provided with an internal frame or the like for maintaining the lid in the closed position by friction	B65D 5/5465
Formed by folding one or more extensions hinged to the upper edge of a tubular container body, the container being provided with an internal frame or the like for maintaining the lid in the closed position by friction	B65D 5/662
Formed by folding extensions of a side panel of a container body formed by erecting a "cross-like" blank, the container being provided with an internal frame or the like for maintaining the lid in the closed position by friction	B65D 5/6679
Formed by extensions hinged to the upper edge of a container body formed by erecting a blank to U-shape, the container being provided with an internal frame or the like for maintaining the lid in the closed position by friction	B65D 5/6691

B65D 5/549

[N: and defining after rupture a lid hinged about a line located in the top surface of the container]

Definition statement

This subclass/group covers:

Illustrative example of subject matter classified in this group:

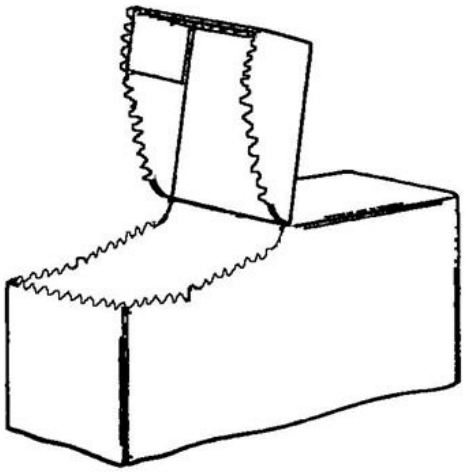

Informative references

Attention is drawn to the following places, which may be of interest for search:

For opening containers formed by erecting a blank in tubular form, the lines of weakness being provided in the container body, and defining after rupture a lid hinged about a line located in the top surface of the container	B65D 5/544
For opening containers formed by erecting a "cross-like" blank and defining after rupture a lid hinged about a line located in the top surface of the container	B65D 5/547
Formed by folding one or more extensions hinged to the upper edge of a tubular container body, the lid being hinged about a line located in the top surface of the container	B65D 5/6623
Formed by folding extensions of a side panel of a container body formed by erecting a "cross-like" blank, the lid being hinged about a line located in the top surface of the container	B65D 5/6682
Formed by extensions hinged to the upper edge of a container body formed by erecting a blank to U-shape, the lid being hinged about a	B65D 5/6694

line located in the top surface of the container	

B65D 5/5495

[N: for separating interconnected containers]

Definition statement

This subclass/group covers:
Illustrative example of subject matter classified in this group:

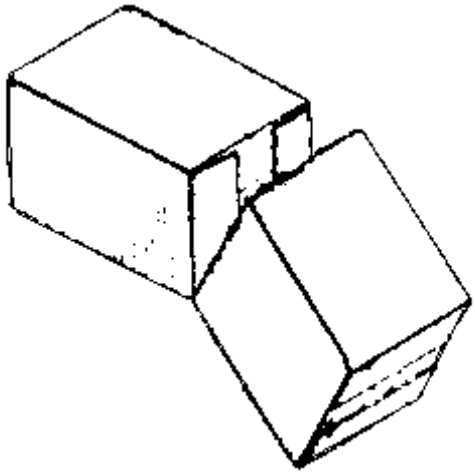

B65D 5/563

[N: Laminated linings; Coatings]

Definition statement

This subclass/group covers:
Illustrative example of subject matter classified in this group:

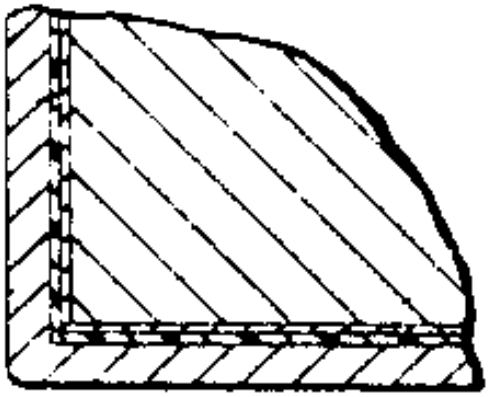

B65D 5/566

[N: Linings made of relatively rigid sheet material, e.g. carton (B65D 5/0281 and B65D 5/58 takes precedence; combined with a flexible lining B65D 5/56, B65D 5/60; for thermal insulating purposes B65D 81/3858; for shock absorbing purposes B65D 81/1275)]

Definition statement

This subclass/group covers:

Illustrative example of subject matter classified in this group:

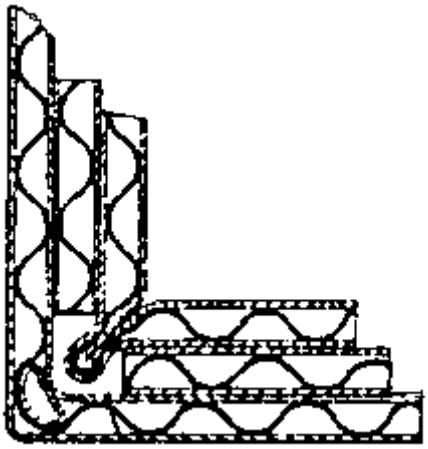

References relevant to classification in this group

This subclass/group does not cover:

The tubular body presenting double or multiple walls	B65D 5/0281
Linings spaced appreciably from	B65D 5/58

container wall	

Informative references

Attention is drawn to the following places, which may be of interest for search:

The lines of weakness being provided in the container body and defining after rupture a lid hinge to the upper edge of the container body, the container being provided with an internal frame or the like for maintaining the lid in the closed position by friction	B65D 5/543

B65D 5/58

Linings spaced appreciably from container wall [N: (for thermal insulating purposes B65D 81/3853)]

Definition statement

This subclass/group covers:

Illustrative example of subject matter classified in this group:

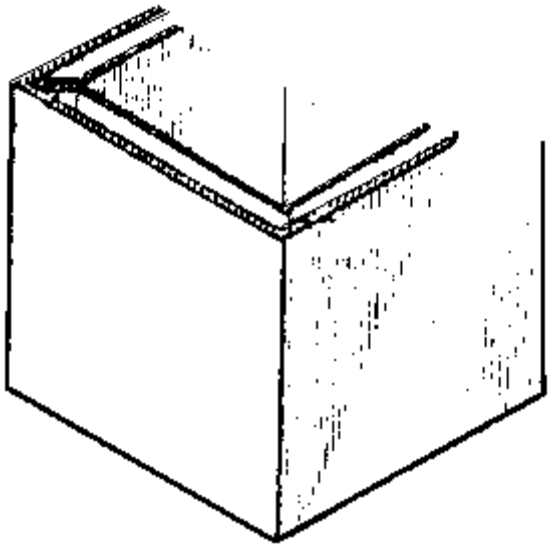

Informative references

Attention is drawn to the following places, which may be of interest for search:

Paper elements formed separately from the container body	B65D 5/5035

B65D 5/60

Loose, [N: or loosely attached], linings [N: (made only of relatively rigid sheet material B65D 5/566)]

References relevant to classification in this group

This subclass/group does not cover:

Internal heat-shrinkable sheets for maintaining the contents	B65D 5/5028

B65D 5/603

[N: Flexible linings loosely glued to the wall of the container (B65D 5/0272 takes precedence)]

Definition statement

This subclass/group covers:

Illustrative example of subject matter classified in this group:

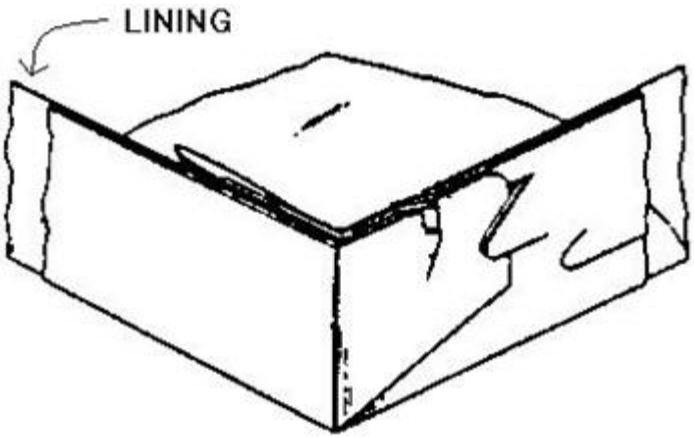

References relevant to classification in this group

This subclass/group does not cover:

Heat-shrinkable	B65D 5/5028

With end closures formed by applying a web on the edge of the body, and subsequent inward folding of flaps	B65D 5/0272

Informative references

Attention is drawn to the following places, which may be of interest for search:

Loose, or loosely attached, linings	B65D 25/16

B65D 5/606

[N: Bags or bag-like tubes loosely glued to the wall of a "tubular" container]

Definition statement

This subclass/group covers:

Illustrative example of subject matter classified in this group:

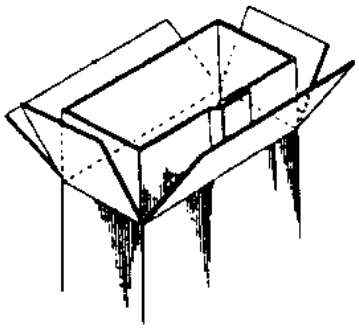

B65D 5/62

External coverings or coatings [N: (B65D 5/4245, B65D 5/4262 take precedence)]

Definition statement

This subclass/group covers:

Illustrative example of subject matter classified in this group:

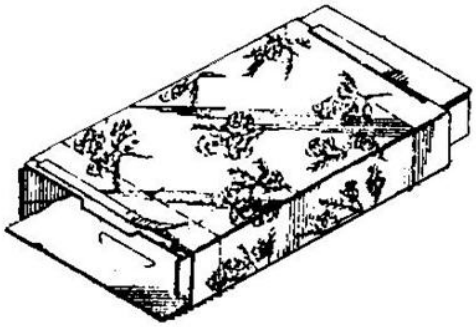

References relevant to classification in this group

This subclass/group does not cover:

Bands covering at least 3 adjacent faces of a container	B65D 5/4245
Bands covering at least 3 adjacent faces of a container provided with a decoration	B65D 5/4262

Informative references

Attention is drawn to the following places, which may be of interest for search:

Coverings or external coatings	B65D 25/34
Coverings or external coatings formed by applying sheet material	B65D 25/36
Articles enclosed in rigid or semi-rigid containers, the whole being wrapped	B65D 77/003

B65D 5/64

Lids

Informative references

Attention is drawn to the following places, which may be of interest for search:

Having a mesh or apertures closure to allow contents to breathe	B65D 85/345
Having a meshed or apertured	B65D 85/345

closure to allow contents to breathe	

B65D 5/643

[N: held in closed position by application of separate elements, e.g. clips, straps (B65D 5/6611, B65D 5/6673 take precedence)]

Definition statement

This subclass/group covers:

Illustrative example of subject matter classified in this group:

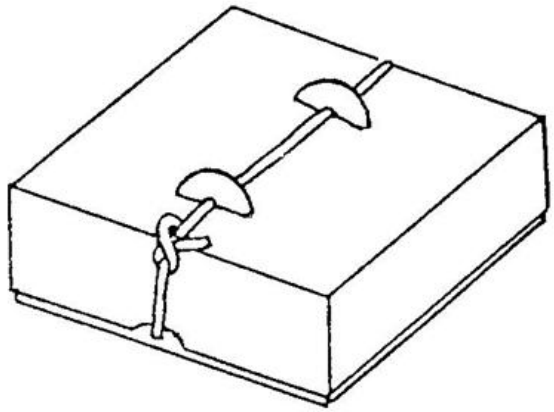

References relevant to classification in group

This subclass/group does not cover:

Hinged lids formed by folding one or more extensions hinged to the upper edge of a tubular container body, the lid being held in position by application of separate elements	B65D 5/6611
Hinged lids formed by folding extensions of a side panel of a container body formed by erecting a "cross-like" blank, the lid being held in position by application of separate elements	B65D 5/6673

Informative references

Attention is drawn to the following places, which may be of interest for search:

Connections formed by separate elements	B65D 5/4283
Telescope flanged lids	B65D 5/68

B65D 5/646

[N: comprising a slidable panel or wall (B65D 5/723 takes precedence)]

Definition statement

This subclass/group covers:

Illustrative example of subject matter classified in this group:

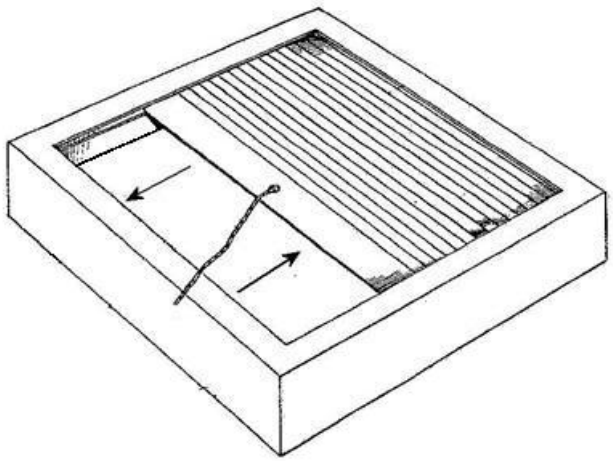

References relevant to classification in this group

This subclass/group does not cover:

Sliding elements for covering and uncovering discharge openings of containers	B65D 5/723
Container lids removed by sliding	B65D 43/12
Linearly slidable, non-removable lids	B65D 43/20

Informative references

Attention is drawn to the following places, which may be of interest for search:

Drawer-and-shell type containers	B65D 5/38
Contents-dispensing means for drawer-and-shell-type containers	B65D 5/728

B65D 5/66

Hinged lids ([N: B65D 5/325] takes precedence)

References relevant to classification in this group

This subclass/group does not cover:

Whereby one blank forms three sides of the body, and the other blank forms the remaining sides, a hinged lid, and the opposite end closure	B65D 5/325
Combined with lines of weakness	B65D 5/54
For cigarette packs	B65D 85/10

B65D 5/6602

[N: formed by folding one or more extensions hinged to the upper edge of a tubular container body]

Informative references

Attention is drawn to the following places, which may be of interest for search:

With end closures formed by inward folding of flaps and securing means of them by means of a tongue integral with one of the flaps	B65D 5/0254
Containers formed by erecting a rigid or semi-rigid blank having a cap-like lid hinged to an edge	B65D 85/1045

B65D 5/6605

[N: the lid being formed by two mating halves joined to opposite edges of the container body]

Definition statement

This subclass/group covers:

Illustrative example of subject matter classified in this group:

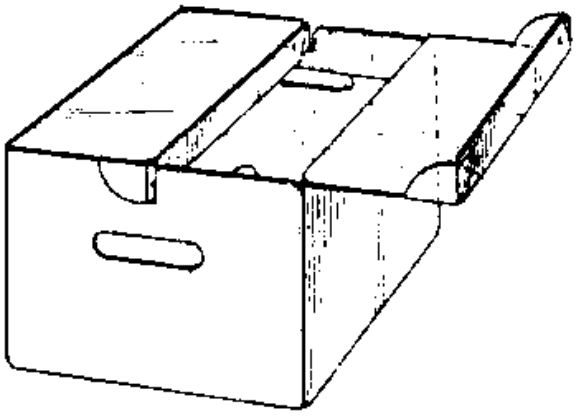

B65D 5/6608

[N: the lid being held in closed position by self-locking integral flaps]

Definition statement

This subclass/group covers:

Illustrative example of subject matter classified in this group:

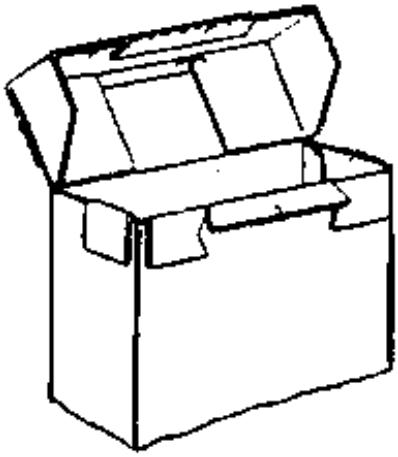

B65D 5/6611

[N: the lid being held in closed position by application of

separate elements, e.g. clips, hooks, elastics]

Definition statement

This subclass/group covers:
Illustrative example of subject matter classified in this group:

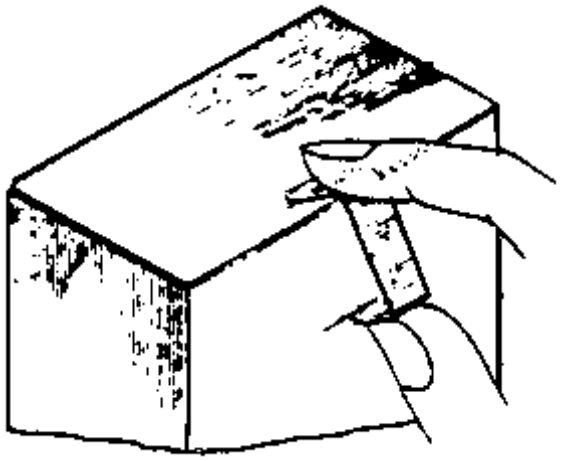

Informative references

Attention is drawn to the following places, which may be of interest for search:

Adhesive tapes, labels or the like	B65D 5/0236
Releasable fastenings clips	F16B 2/20

B65D 5/6614

[N: with means for retaining the lid in open position]

Definition statement

This subclass/group covers:
Illustrative example of subject matter classified in this group:

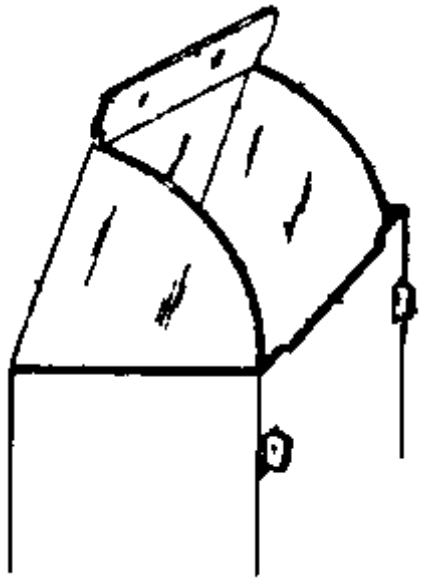

B65D 5/6617

[N: the container body sliding in an outer sleeve (B65D 85/1054 takes precedence)]

References relevant to classification in this group

This subclass/group does not cover:

Containers formed by erecting a rigid or semi-rigid blank, having a cap-like lid hinges to an edge combined with an outer sleeve connected to the lid	B65D 85/1054

Informative references

Attention is drawn to the following places, which may be of interest for search:

The container body sliding in an outer sleeve	B65D 5/6688
Contents dispensing means for drawer-and-shell-type containers	B65D 5/728

B65D 5/662

[N: the container being provided with an internal frame or the

like for maintaining the lid in the closed position by friction]

Definition statement

This subclass/group covers:

Illustrative example of subject matter classified in this group:

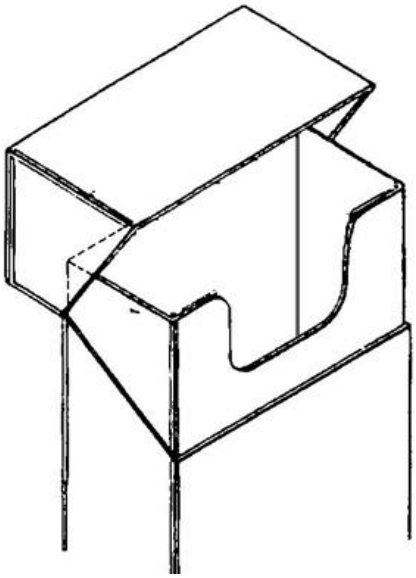

Informative references

Attention is drawn to the following places, which may be of interest for search:

For opening containers formed by erecting a blank in tubular form the lines of weakness being provided in the container body and defining after rupture a lid hinged to the upper edge of the container body the container being provided with an internal frame or the like for maintaining the lid in the closed position by friction	B65D 5/543
For opening containers formed by erecting a "cross-like" blank the container being provided with an internal frame or the like for maintaining the lid in the closed position by friction	B65D 5/5465
For opening containers formed by erecting a blank to U-shape the container being provided with an internal frame or the like for maintaining the lid in the closed	B65D 5/5485

position by friction	
Formed by folding extensions of a side panel of a container body formed by erecting a "cross-like" blank the container being provided with an internal frame or the like for maintaining the lid in the closed position by friction	B65D 5/6679
Formed by extensions hinged to the upper edge of a container body formed by erecting a blank to U-shape the container being provided with an internal frame or the like for maintaining the lid in the closed position by friction	B65D 5/6691

B65D 5/6623

[N: the lid being hinged about a line located in the top surface of the container]

Definition statement

This subclass/group covers:

Illustrative example of subject matter classified in this group:

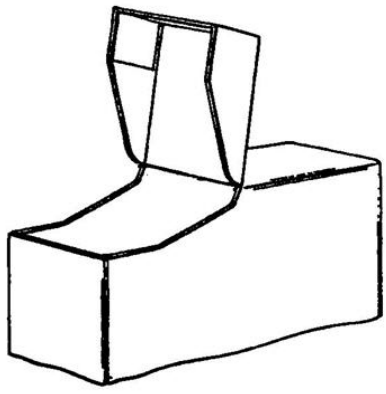

Informative references

Attention is drawn to the following places, which may be of interest for search:

For opening containers formed by erecting a blank in tubular form the	B65D 5/544

lines of weakness being provided in the container body and defining after rupture a lid hinged about a like located in the top surface of the container	
For opening containers formed by erecting a "cross-like" blank and defining after rupture a lid hinged about a line located in the top surface of the container	B65D 5/547
For opening containers formed by erecting a blank to U-shape and defining after rupture a lid hinged about a line located in the top surface of the container	B65D 5/549
Formed by folding extensions of a side panel of a container body formed by erecting a "cross-like" blank the lid being hinged about a line located in the top surface of the container	B65D 5/6682
Formed by extensions hinged to the upper edge of a container body formed by erecting a blank to U-shape the lid being hinged about a line located in the top surface of the container	B65D 5/6694

B65D 5/6629

[N: the lid being formed by two mating halves joined to opposite edges of the container body]

Definition statement

This subclass/group covers:

Illustrative example of subject matter classified in this group:

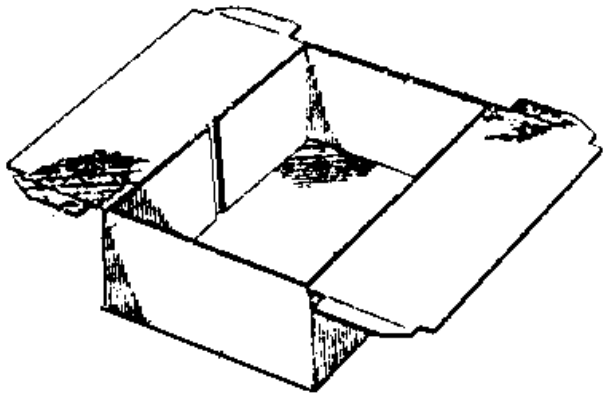

B65D 5/6632

[N: the lid-halves being held in closed position by flaps or tabs provided at their side edges only (B65D 5/6644, B65D 5/6647 take precedence)]

Definition statement

This subclass/group covers:

Illustrative example of subject matter classified in this group:

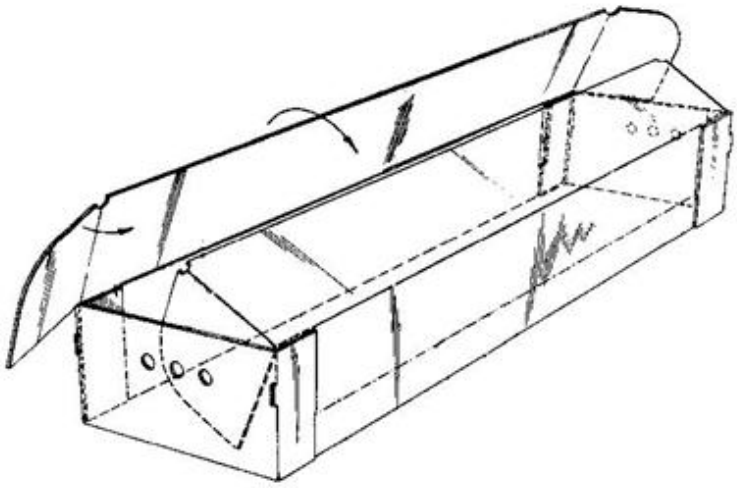

References relevant to classification in this group

This subclass/group does not cover:

The lid-halves being held in closed position by local tabs or projections at the upper edge of opposite walls of the container body, e.g. by entering within slots provided in the lid-halves	B65D 5/6644
The lid-halves being held in closed	B65D 5/6647

position by application of separate elements, e.g. clips, hooks, cords	

B65D 5/6635

[N: the lid-halves being held in closed position by flaps or tabs provided at their edge opposite to their hinge (B65D 5/6644, B65D 5/6647 take precedence)]

Definition statement

This subclass/group covers:

Illustrative example of subject matter classified in this group:

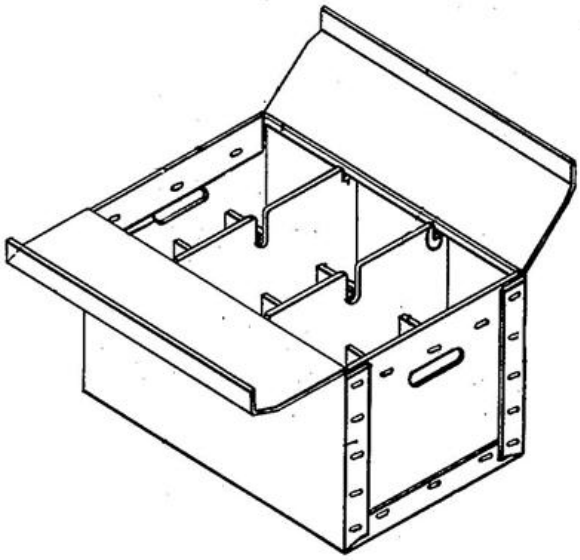

References relevant to classification in this group

This subclass/group does not cover:

The lid-halves being held in closed position by local tabs or projections at the upper edge of opposite walls of the container body, e.g. by entering within slots provided in the lid-halves	B65D 5/6644
The lid-halves being held in closed position by application of separate elements, e.g. clips, hooks, cords	B65D 5/6647

B65D 5/6638

[N: combined with flaps or tabs provided at the side edges of the lid-halves]

Definition statement

This subclass/group covers:

Illustrative example of subject matter classified in this group:

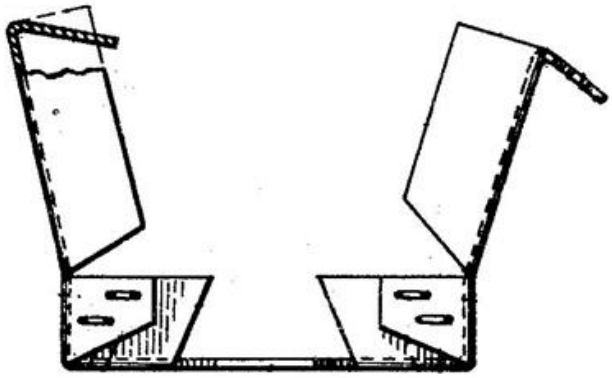

B65D 5/6641

[N: and connected to one another in order to form an uninterrupted flange]

Definition statement

This subclass/group covers:

Illustrative example of subject matter classified in this group:

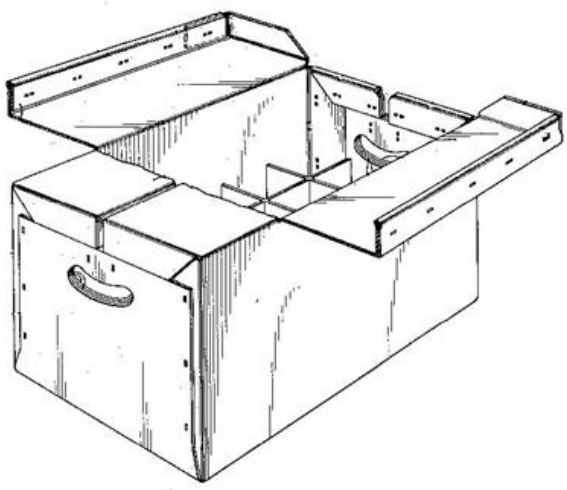

B65D 5/6644

[N: the lid-halves being held in closed position by local tabs or projections at the upper edge of opposite walls of the container body, e.g. by entering within slots provided in the lid-halves]

Definition statement

This subclass/group covers:

Illustrative example of subject matter classified in this group:

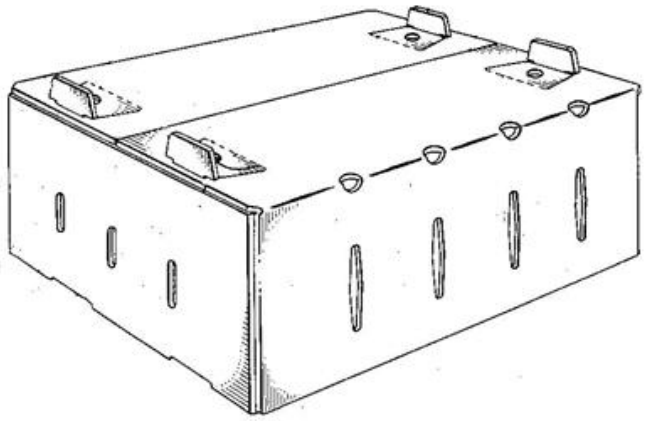

B65D 5/6647

[N: the lid-halves being held in closed position by application of separate elements, e.g. clips, hooks, cords]

Definition statement

This subclass/group covers:

Illustrative example of subject matter classified in this group:

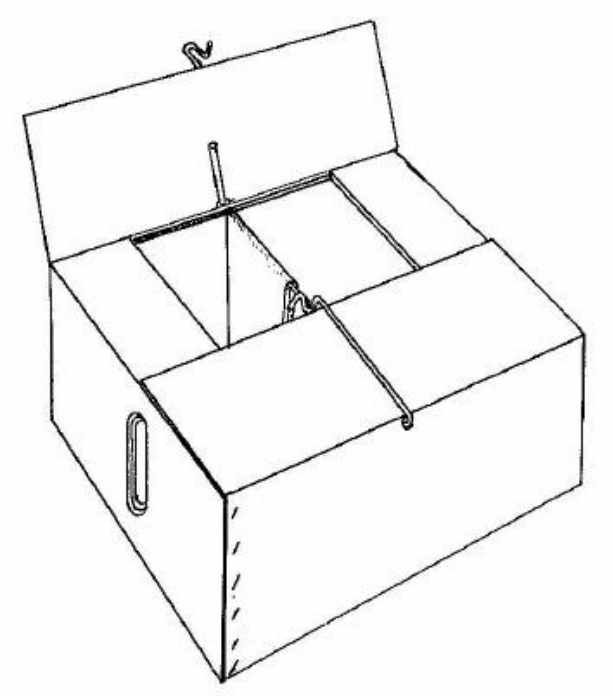

Informative references

Attention is drawn to the following places, which may be of interest for search:

The lid being held in closed position by application of separate elements, e.g. clips, hooks, cords	B65D 5/6673

B65D 5/665

[N: the lid being held in closed position by self-locking integral flaps or tabs]

Definition statement

This subclass/group covers:

Illustrative example of subject matter classified in this group:

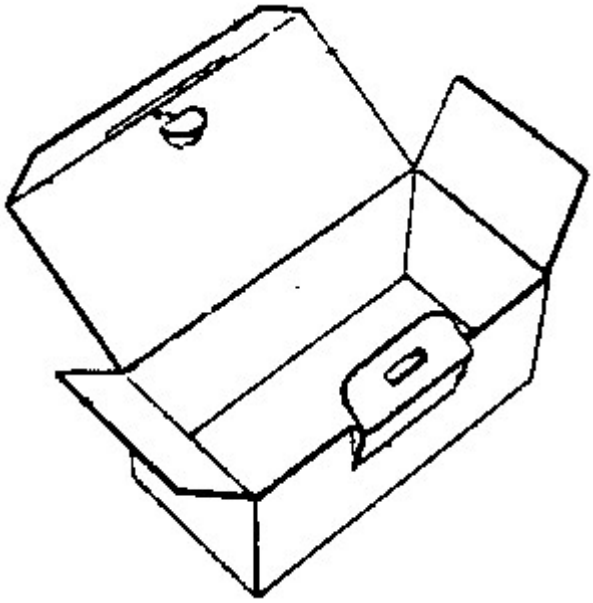

B65D 5/6652

[N: Flaps or tabs provided at the side edges of the lid only]

Definition statement

This subclass/group covers:
Illustrative example of subject matter classified in this group:

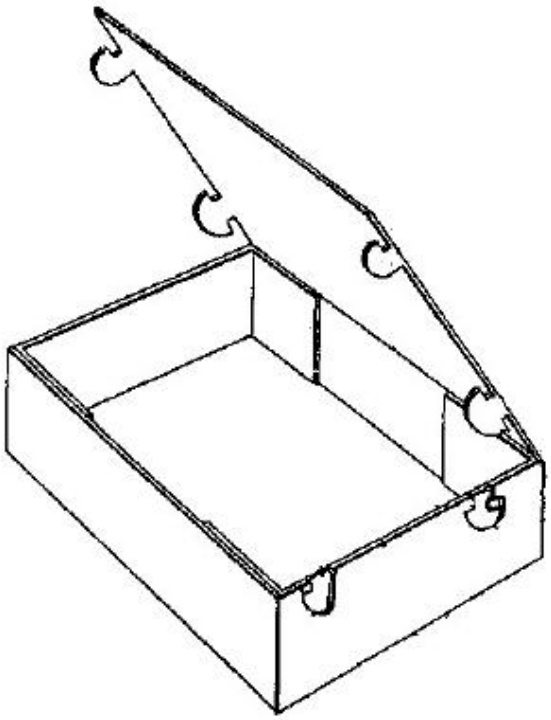

B65D 5/6655

[N: Local flaps or tabs provided at the lid edge opposite to the hinge]

Definition statement

This subclass/group covers:

Illustrative example of subject matter classified in this group:

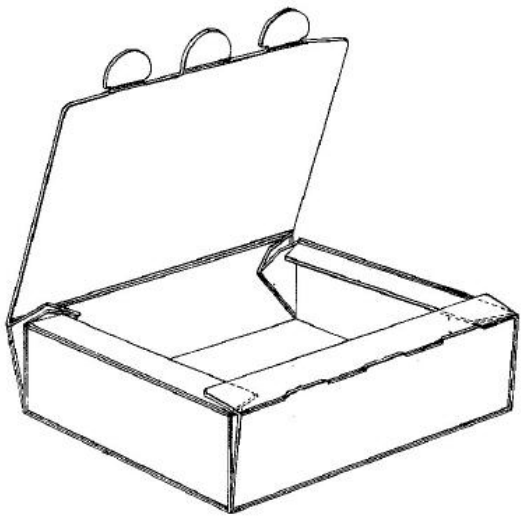

B65D 5/6658

[N: combined with flaps or tabs provided at the side edges of the lid]

Definition statement

This subclass/group covers:

Illustrative example of subject matter classified in this group:

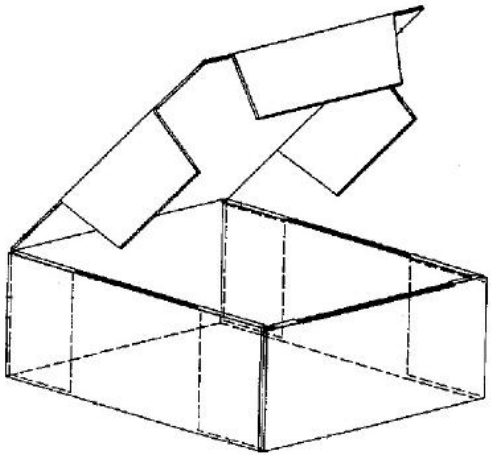

B65D 5/6661

[N: Flaps provided over the total length of the lid edge opposite to the hinge]

Definition statement

This subclass/group covers:

Illustrative example of subject matter classified in this group:

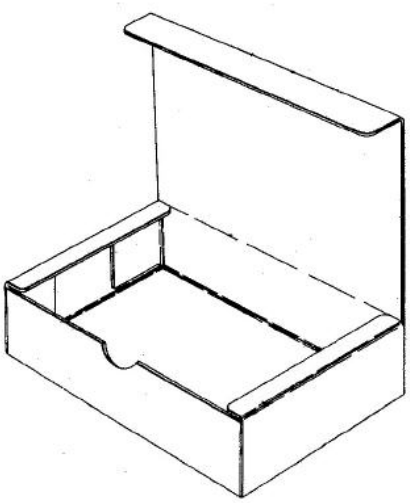

B65D 5/6664

[N: combined with flaps or tabs provided at the side edges of the lid]

Definition statement

This subclass/group covers:

Illustrative example of subject matter classified in this group:

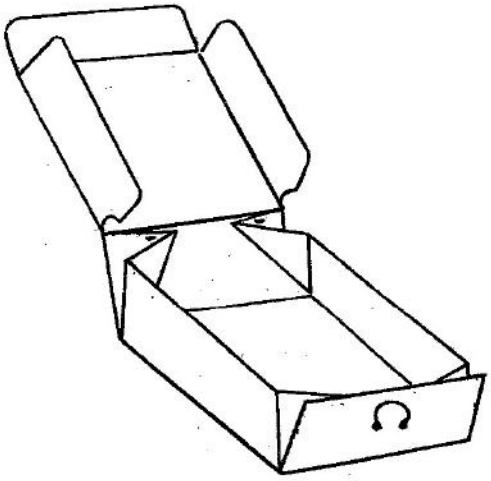

B65D 5/6667

[N: and connected to one another in order to form an uninterrupted telescoping flange (B65D 5/667 takes precedence)] [N0001]

Definition statement

This subclass/group covers:

Illustrative example of subject matter classified in this group:

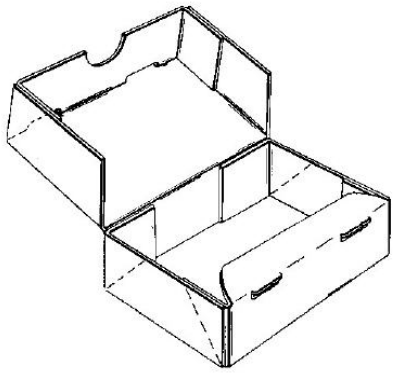

References relevant to classification in this group

This subclass/group does not cover:

Lids in the form of an inverted tray	B65D 5/667

B65D 5/667

[N: Lids in the form of an inverted tray]

Definition statement

This subclass/group covers:

Illustrative example of subject matter classified in this group:

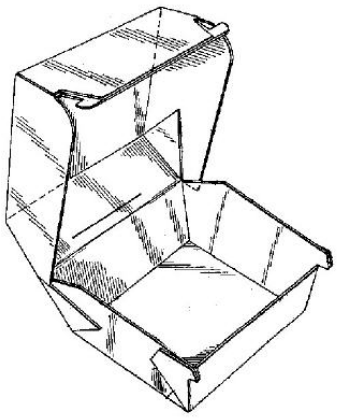

B65D 5/6673

[N: the lid being held in closed position by application of separate elements, e.g. clips, hooks, cords (B65D 5/6647 takes precedence)]

Definition statement

This subclass/group covers:

Illustrative example of subject matter classified in this group:

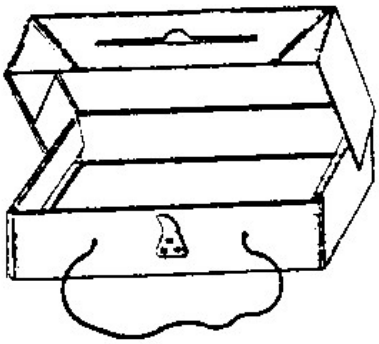

References relevant to classification in this group

This subclass/group does not cover:

The lid-halves being held in closed position by application of separate elements, e.g. clips, hooks, cords	B65D 5/6647
Releasable fastenings clips	F16B 2/20

B65D 5/6676

[N: with means for retaining the lid in open position]

Definition statement

This subclass/group covers:

Illustrative example of subject matter classified in this group:

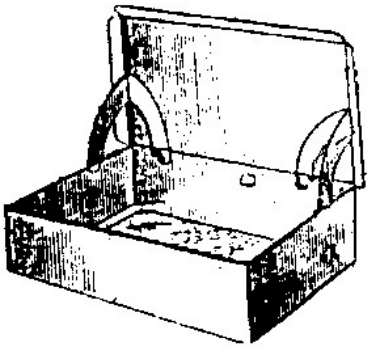

B65D 5/6679

[N: the container being provided with an internal frame or the like for maintaining the lid in the closed position by friction]

Definition statement

This subclass/group covers:

Illustrative example of subject matter classified in this group:

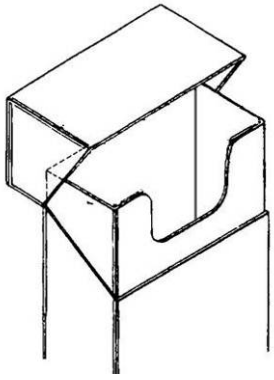

Informative references

Attention is drawn to the following places, which may be of interest for search:

The lines of weakness being provided in the container body, defining after rupture a lid hinged to the upper edge of the container body, the container being provided with an internal frame or the like for maintaining the lid in the	B65D 5/543

closed position by friction	
For opening containers formed by erecting a "cross-like" blank, the container being provided with an internal frame or the like for maintaining the lid in the closed position by friction	B65D 5/5465
For opening containers formed by erecting a blank to U-shape, the container being provided with an internal frame or the like for maintaining the lid in the closed position by friction	B65D 5/5485
Formed by folding one or more extensions hinged to the upper edge of a tubular container body, the container being provided with an internal frame or the like for maintaining the lid in the closed position by friction	B65D 5/662
Formed by extensions hinged to the upper edge of a container body formed by erecting a blank to U-shape, the container being provided with an internal frame or the like for maintaining the lid in the closed position by friction	B65D 5/6691

B65D 5/6682

[N: the lid being hinged about a line located in the top surface of the container]

Definition statement

This subclass/group covers:

Illustrative example of subject matter classified in this group:

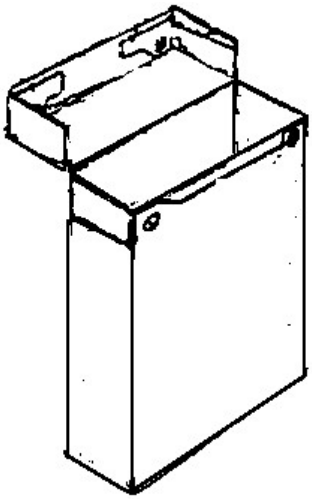

Informative references

Attention is drawn to the following places, which may be of interest for search:

For opening containers formed by erecting a blank in tubular form, the lines of weakness being provided in the container body, and defining after rupture a lid hinged about a line located in the top surface of the container	B65D 5/544
For opening containers formed by erecting a "cross-like" blank and defining after rupture a lid hinged about a line located in the top surface of the container	B65D 5/547
For opening containers formed by erecting a blank to U-shape and defining after rupture a lid hinged about a line located in the top surface of the container	B65D 5/549
Formed by folding one or more extensions hinged to the upper edge of a tubular container body, the lid being hinged about a line located in the top surface of the container	B65D 5/6623
Formed by extensions hinged to the upper edge of a container body formed by erecting a blank to U-shape, the lid being hinged about a line located in the top surface of the	B65D 5/6694

container	

B65D 5/6685

[N: formed by extensions hinged to the upper edge of a container body formed by erecting a blank to U-shape]

Informative references

Attention is drawn to the following places, which may be of interest for search:

Containers formed by erecting a rigid or semi-rigid blank	B65D 85/1036

B65D 5/6688

[N: the container body sliding in an outer sleeve (B65D 85/1054 takes precedence)]

Definition statement

This subclass/group covers:

Illustrative example of subject matter classified in this group:

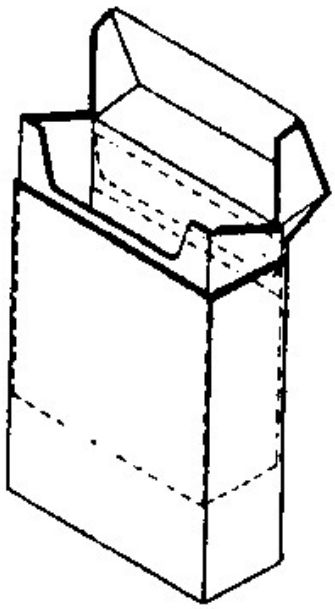

References relevant to classification in this group

This subclass/group does not cover:

Containers formed by erecting a rigid or semi-rigid blank having a cap-like lid hinged to an edge combined with an outer sleeve connected to the lid	B65D 85/1054

B65D 5/6691

[N: the container being provided with an internal frame or the like for maintaining the lid in the closed position by friction]

Definition statement

This subclass/group covers:

Illustrative example of subject matter classified in this group:

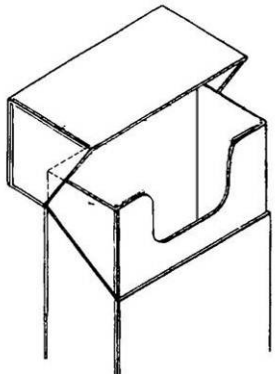

Informative references

Attention is drawn to the following places, which may be of interest for search:

The lines of weakness being provided in the container body, defining after rupture a lid hinged to the upper edge of the container body, the container being provided with an internal frame or the like for maintaining the lid in the closed position by friction	B65D 5/543
For opening containers formed by erecting a "cross-like" blank, the container being provided with an internal frame or the like for maintaining the lid in the closed position by friction	B65D 5/5465
For opening containers formed by erecting a blank to U-shape, the	B65D 5/5485

container being provided with an internal frame or the like for maintaining the lid in the closed position by friction	
Formed by folding one or more extensions hinged to the upper edge of a tubular container body, the container being provided with an internal frame or the like for maintaining the lid in the closed position by friction	B65D 5/662
Formed by folding extensions of a side panel of a container body formed by erecting a "cross-like" blank, the container being provided with an internal frame or the like for maintaining the lid in the closed position by friction	B65D 5/6679

B65D 5/6694

[N: the lid being hinged about a line located in the top surface of the container]

Definition statement

This subclass/group covers:

Illustrative example of subject matter classified in this group:

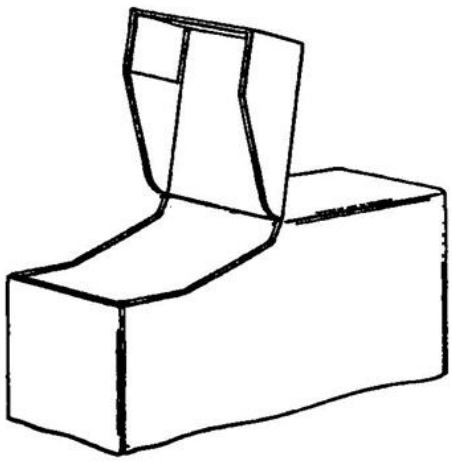

Informative references

Attention is drawn to the following places, which may be of interest for search:

For opening containers formed by erecting a blank in tubular form, the lines of weakness being provided in the container body, and defining after rupture a lid hinged about a line located in the top surface of the container	B65D 5/544
For opening containers formed by erecting a "cross-like" blank and defining after rupture a lid hinged about a line located in the top surface of the container	B65D 5/547
For opening containers formed by erecting a blank to U-shape and defining after rupture a lid hinged about a line located in the top surface of the container	B65D 5/549
Formed by folding one or more extensions hinged to the upper edge of a tubular container body, the lid being hinged about a line located in the top surface of the container	B65D 5/6623
Formed by folding extensions of a side panel of a container body formed by erecting a "cross-like" blank, the lid being hinged about a line located in the top surface of the container	B65D 5/6682

B65D 5/6697

[N: Separate lids attached to the container body by a hinge element]

Definition statement

This subclass/group covers:

Illustrative example of subject matter classified in this group:

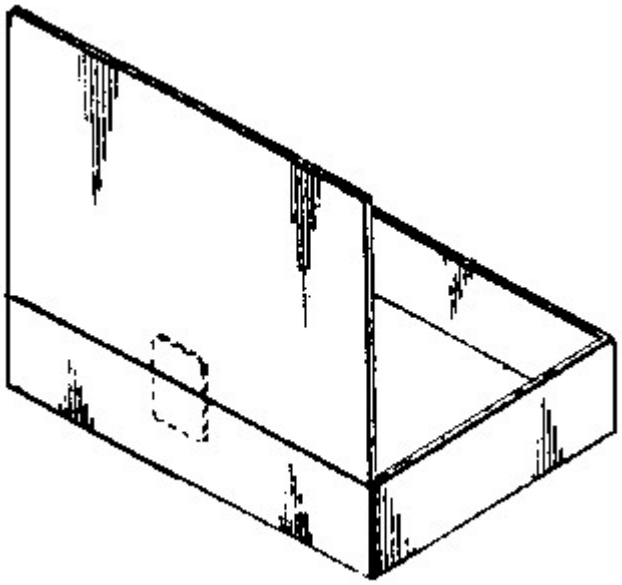

B65D 5/68

Telescope flanged lids

Definition statement

This subclass/group covers:
Illustrative example of subject matter classified in this group:

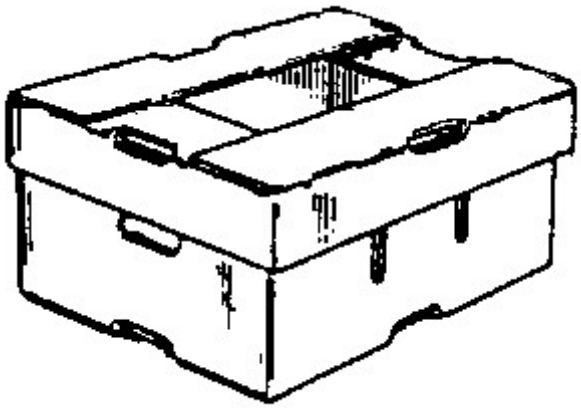

B65D 5/685

[N: having an inwardly or upwardly extending tab on the lid side wall cooperating with a tab on, or an opening in, the container side wall]

Definition statement

This subclass/group covers:

Illustrative example of subject matter classified in this group:

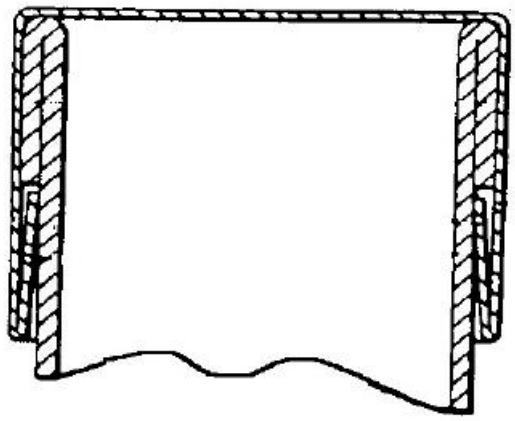

B65D 5/70

Break-in flaps, or members adapted to be torn-off, to provide pouring openings (B65D 5/74 takes precedence)

References relevant to classification in this group

This subclass/group does not cover:

Spouts	B65D 5/74

B65D 5/701

[N: Tearable flaps defined by score-lines or incisions provided in the closure flaps of a tubular container made of a single blank]

Definition statement

This subclass/group covers:

Illustrative example of subject matter classified in this group:

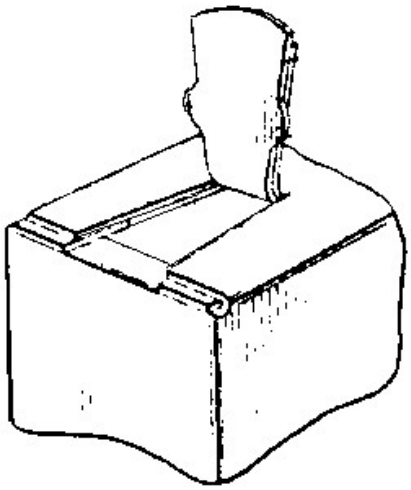

B65D 5/703

[N: the score-lines or incisions extending in the body of the tubular container]

Definition statement

This subclass/group covers:

Illustrative example of subject matter classified in this group:

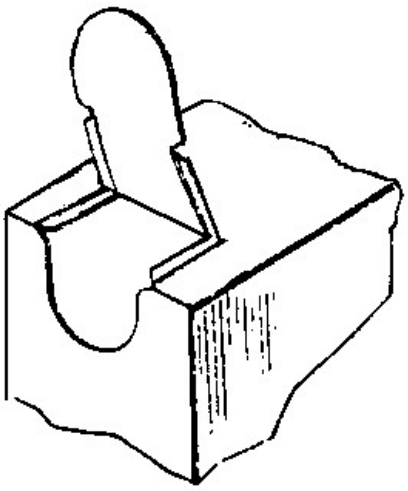

B65D 5/705

[N: Tearable flaps defined by score-lines or incisions provided in the body of a tubular container made of a single blank]

Definition statement

This subclass/group covers:

Illustrative example of subject matter classified in this group:

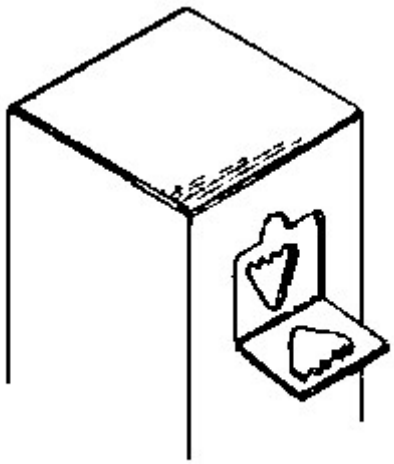

Informative references

Attention is drawn to the following places, which may be of interest for search:

Spouts formed by deforming or tearing scored or incised parts of the side-wall of containers	B65D 5/743

B65D 5/706

[N: Tearable flaps defined by score-lines or incisions provided in a separate end closure of a tubular container]

Definition statement

This subclass/group covers:

Illustrative example of subject matter classified in this group:

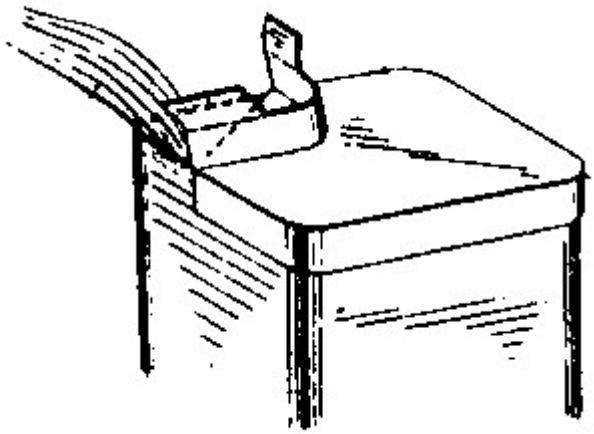

B65D 5/708

[N: Separate tearable flexible elements covering a discharge opening of a container, e.g. adhesive tape]

Definition statement

This subclass/group covers:

Illustrative example of subject matter classified in this group:

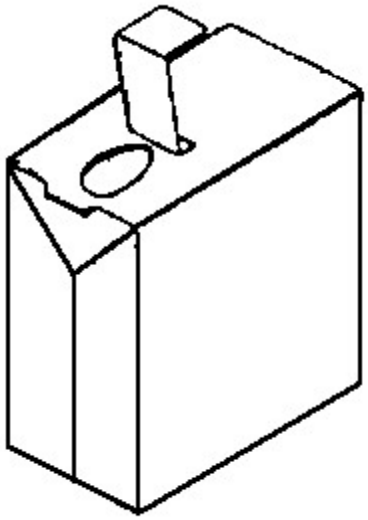

Informative references

Attention is drawn to the following places, which may be of interest for search:

Non-integral frangible members applied to, or inserted in, a preformed opening, e.g. tearable strips, plastic plugs	B65D 17/50

B65D 5/722

[N: having an alternating movement co-operating with incised or scored openings near the bottom-edges of the bodies of tubular containers]

Definition statement

This subclass/group covers:

Illustrative example of subject matter classified in this group:

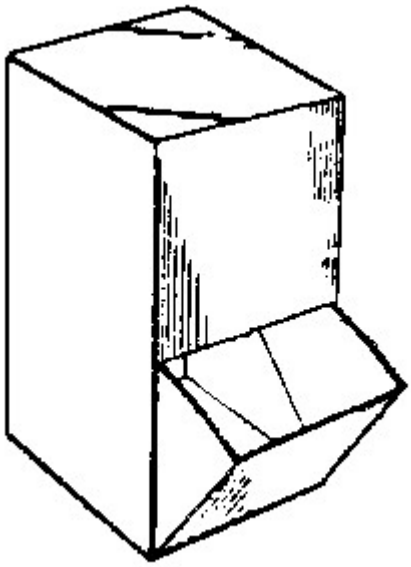

Informative references

Attention is drawn to the following places, which may be of interest for search:

Combined with swivelling devices having a bottom-wall and two side-walls	B65D 5/744

B65D 5/723

[N: Sliding elements for covering and uncovering discharge openings of containers, e.g. slide-closures]

Definition statement

This subclass/group covers:

Illustrative example of subject matter classified in this group:

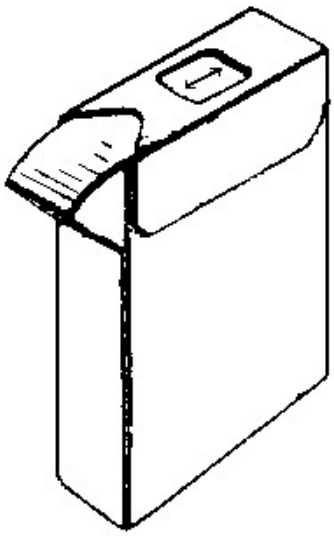

Informative references

Attention is drawn to the following places, which may be of interest for search:

Contents-dispensing means consisting of mobile elements forming part of the containers or attached to the containers	B65D 5/721

B65D 5/724

[N: Internal fittings facilitating the discharge of contents, e.g. guiding panels, movable bottoms or lifting strips]

Definition statement

This subclass/group covers:

Illustrative example of subject matter classified in this group:

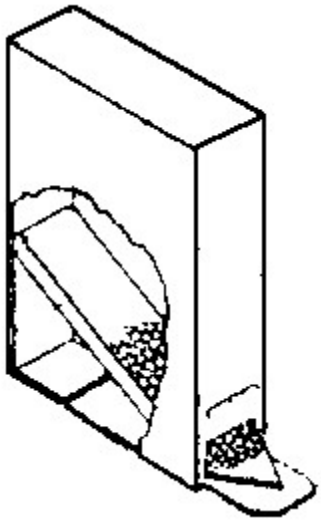

B65D 5/725

[N: Incised or pre-scored openings or windows provided in the side wall of containers]

Definition statement

This subclass/group covers:

Illustrative example of subject matter classified in this group:

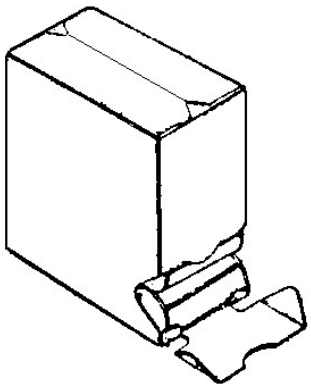

Informative references

Attention is drawn to the following places, which may be of interest for search:

The tubular body being formed with an aperture or removable portion arranged to allow removal or insertion of contents through one or more sides	B65D 5/16

B65D 5/726

[N: Means for discharging contents through the bottom of containers]

Definition statement

This subclass/group covers:

Illustrative example of subject matter classified in this group:

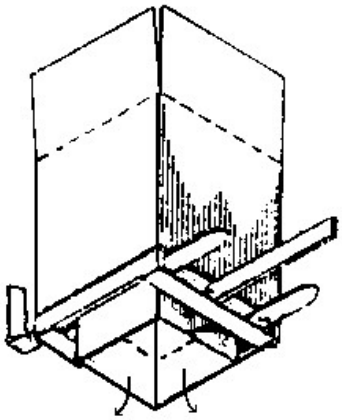

B65D 5/727

[N: Dispensing openings provided in the upper end-walls of tubular containers, the openings being closed by means of separate stopper or other closure elements]

Definition statement

This subclass/group covers:

Illustrative example of subject matter classified in this group:

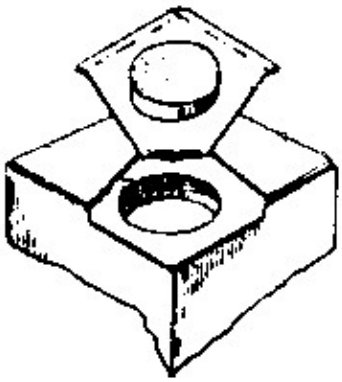

Informative references

Attention is drawn to the following places, which may be of interest for search:

Non-integral frangible members applied to, or inserted in, a preformed opening, e.g. tearable strips, plastic plugs	B65D 17/50

B65D 5/728

[N: for drawer-and-shell-type containers]

Definition statement

This subclass/group covers:

Illustrative example of subject matter classified in this group:

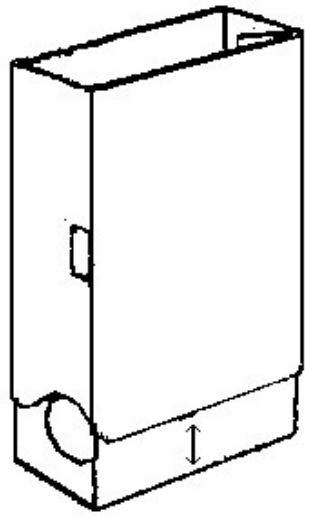

Informative references

Attention is drawn to the following places, which may be of interest for search:

Containers formed by erecting a rigid or semi-rigid blank having a cap-like lid hinged to an edge combined with an outer sleeve connected to the lid	B65D 85/1054

B65D 5/741

[N: for containers having a tubular body (B65D 5/746 takes precedence)]

References relevant to classification in this group

This subclass/group does not cover:

Spouts formed separately from the container	B65D 5/746

B65D 5/742

[N: Spouts formed by deforming or tearing the closure flaps or severed or incised parts of the closure flaps (B65D 5/06 takes precedence)]

Definition statement

This subclass/group covers:

Illustrative example of subject matter classified in this group:

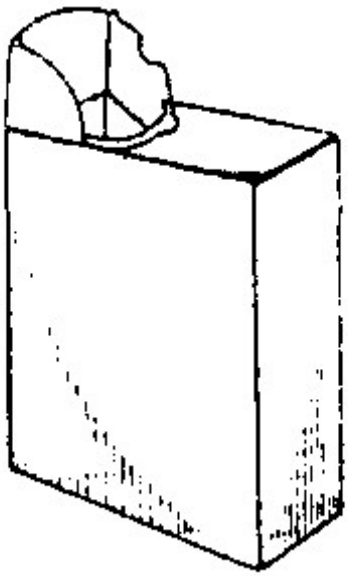

References relevant to classification in this group

This subclass/group does not cover:

With end-closing or contents-supporting elements formed by folding inwardly a wall extending from, and continuously around, an end of the tubular body	B65D 5/06

B65D 5/743

[N: Spouts formed by deforming or tearing scored or incised parts of the side-wall of containers]

Definition statement

This subclass/group covers:

Illustrative example of subject matter classified in this group:

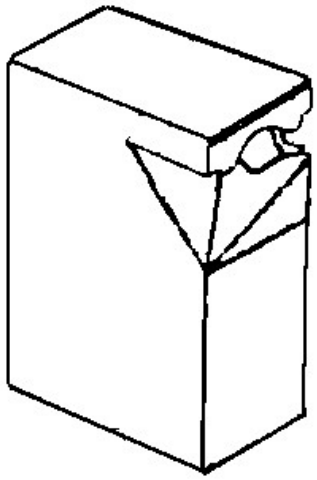

Informative references

Attention is drawn to the following places, which may be of interest for search:

Tearable flaps defined by score-lines or incisions provided in the body of a tubular container made of a single blank	B65D 5/705

B65D 5/744

[N: combined with swivelling devices having a bottom-wall and two side-walls]

Definition statement

This subclass/group covers:

Illustrative example of subject matter classified in this group:

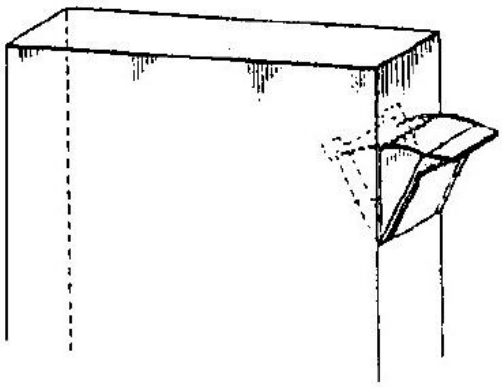

Informative references

Attention is drawn to the following places, which may be of interest for search:

Having an alternating movement co-operating with incised or scored openings near the bottom-edges of the bodies of tubular containers	B65D 5/722
Closures with swivelling dispensing devices	B65D 47/046

B65D 5/745

[N: Spouts formed by deforming or tearing parts of the upper wall, combined with a deformation of a part of the body of the container]

Definition statement

This subclass/group covers:

Illustrative example of subject matter classified in this group:

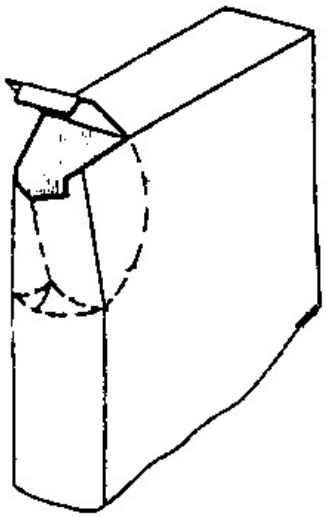

B65D 5/746

[N: Spouts formed separately from the container]

Definition statement

This subclass/group covers:
Illustrative example of subject matter classified in this group:

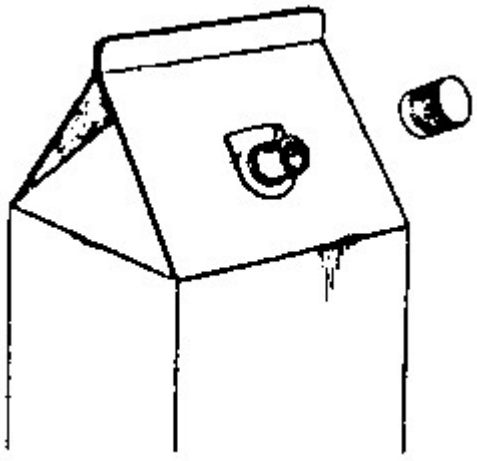

B65D 5/747

[N: with means for piercing or cutting the container wall or a membrane connected to said wall]

Informative references

Attention is drawn to the following places, which may be of interest for search:

Caps, lids, or covers co-operating	B65D 51/22

with an inner closure arranged to be opened by piercing, cutting, or tearing having means for piercing, cutting, or tearing the inner closure	

B65D 5/748

[N: a major part of the container wall or membrane being left inside the container after the opening]

Definition statement

This subclass/group covers:

Illustrative example of subject matter classified in this group:

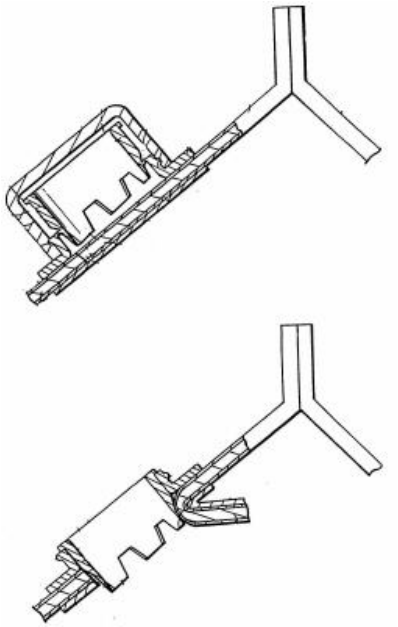

Informative references

Attention is drawn to the following places, which may be of interest for search:

A major part of the inner closure being left inside the container after the opening	B65D 51/221

B65D 5/749

[N: a major part of the container wall or membrane being

removed from the container after the opening]

Definition statement

This subclass/group covers:
Illustrative example of subject matter classified in this group:

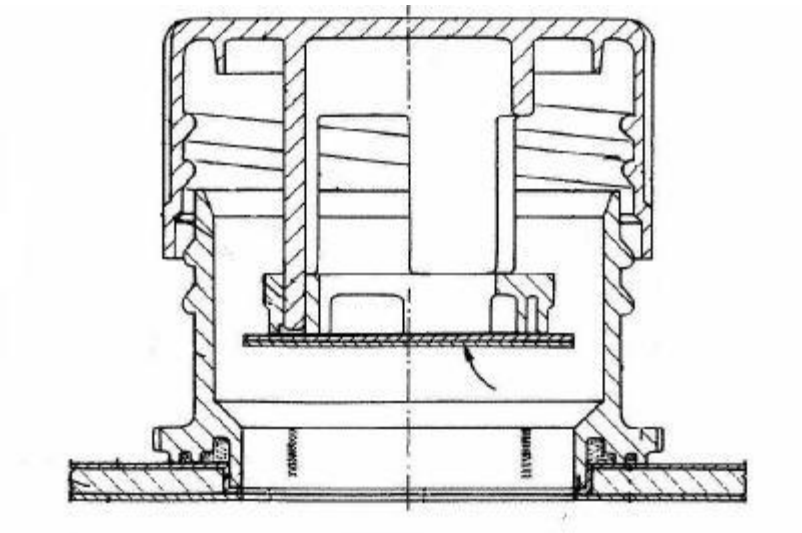

Informative references

Attention is drawn to the following places, which may be of interest for search:

A major part of the inner closure being removed from the container after the opening	B65D 51/228

B65D 5/76

for discharging metered quantities

Definition statement

This subclass/group covers:
Illustrative example of subject matter classified in this group:

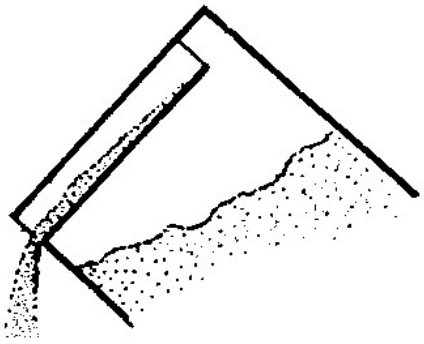

Informative references

Attention is drawn to the following places, which may be of interest for search:

Devices for discharging successive articles or portions of contents	B65D 25/52

B65D 7/00

[N: IPC2] Containers having bodies formed by interconnecting or uniting two or more rigid, or substantially rigid, components made wholly or mainly of metal (specially constructed to be opened by cutting, piercing, or tearing of wall portions B65D 17/00; pallets B65D 19/00; tanks for domestic water storage heaters F24H 1/181)

References relevant to classification in this group

This subclass/group does not cover:

Milk churns	A61J 9/00

B65D 7/02

[N: IPC2] characterised by shape

References relevant to classification in this group

This subclass/group does not cover:

Milk churns	A61J 9/00

B65D 7/04

[N: IPC2] of curved cross-section, e.g. cans of circular or elliptical cross-section [N: (thermally insulated B65D 81/3813, B65D 81/3837)]

References relevant to classification in this group

This subclass/group does not cover:

Milk churns	A61J 9/00

B65D 7/045

[N: Casks, barrels, or drums in their entirety, e.g. beer barrels, i.e. presenting most of the following features like rolling beads, double walls, reinforcing and supporting beads for end walls (thermally insulated barrels, B65D 81/3802)]

Definition statement

This subclass/group covers:

Illustrative example of subject matter classified in this group:

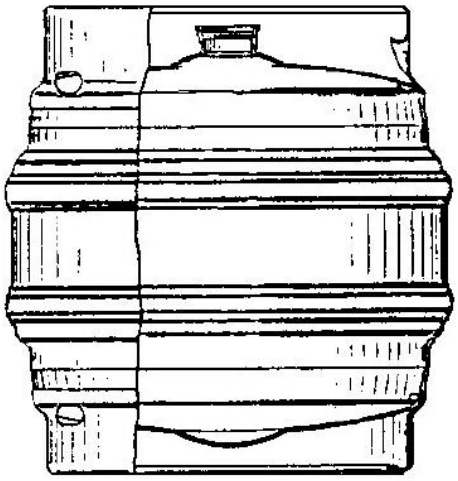

References relevant to classification in this group

This subclass/group does not cover:

Milk churns	A61J 9/00
Filling or emptying apertures only	B65D 7/40

Informative references

Attention is drawn to the following places, which may be of interest for search:

Cans, casks, barrels, or drums characterised by location or arrangement of filling or discharge apertures	B65D 1/20
Arrangements of filling or discharging apertures	B65D 11/08

B65D 7/065

[N: with partitions or compartments]

Definition statement

This subclass/group covers:

Illustrative example of subject matter classified in this group:

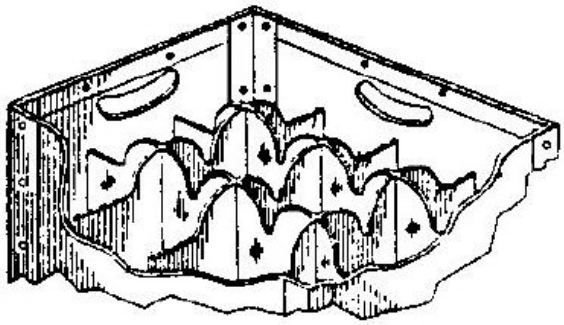

Informative references

Attention is drawn to the following places, which may be of interest for search:

Bottle crates not made in one piece	B65D 85/305

B65D 7/20

[N: IPC2] made of wire

Definition statement

This subclass/group covers:

Illustrative example of subject matter classified in this group:

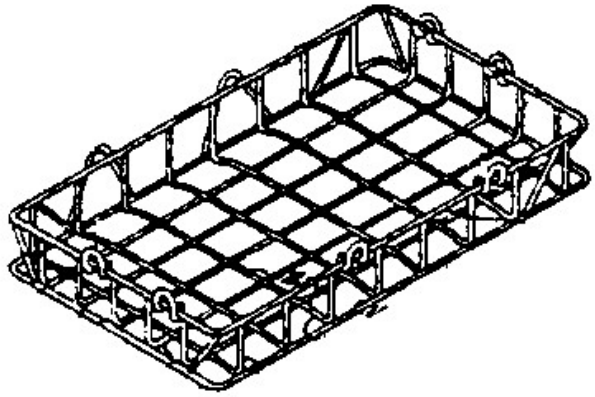

References relevant to classification in this group

This subclass/group does not cover:

Collapsible	B65D 7/24
Containers specially shaped, or provided with fittings or attachments, to facilitate nesting, stacking, or joining together	B65D 21/02

B65D 7/26

[N: IPC2] with all parts hinged together

Definition statement

This subclass/group covers:

Illustrative example of subject matter classified in this group:

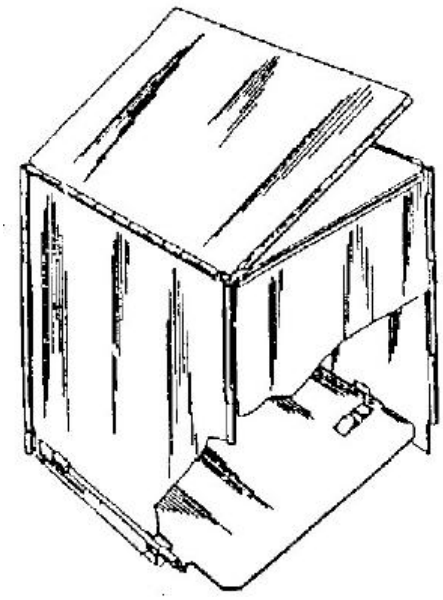

B65D 7/28

[N: IPC2] with some parts detachable and other parts hinged together

Definition statement

This subclass/group covers:

Illustrative example of subject matter classified in this group:

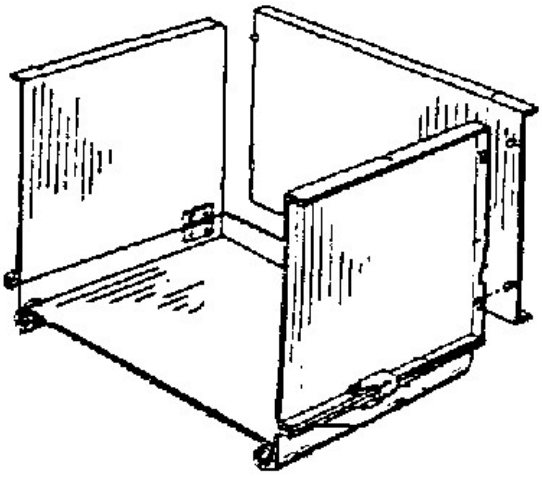

B65D 7/32

[N: IPC2] separate from container walls

Definition statement

This subclass/group covers:

Illustrative example of subject matter classified in this group:

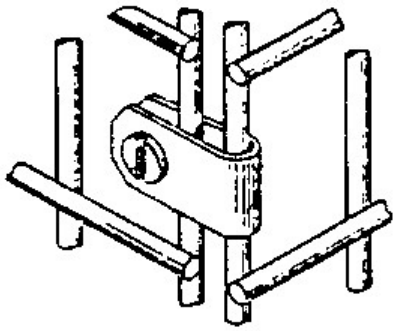

B65D 7/36

[N: IPC2] formed by rolling, or by rolling and pressing

Definition statement

This subclass/group covers:
Illustrative example of subject matter classified in this group:

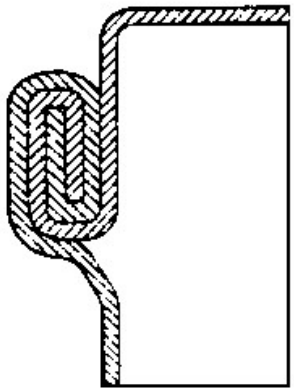

Informative references

Attention is drawn to the following places, which may be of interest for search:

Closures secured by folding or rolling and pressing	B65D 17/08
Container closures formed after filling by applying separate lids or covers, the cover being maintained on the container by mechanical means	B65D 77/2004

B65D 7/38

[N: IPC2] formed by soldering, welding, or otherwise uniting opposed surfaces

Definition statement

This subclass/group covers:

Illustrative example of subject matter classified in this group:

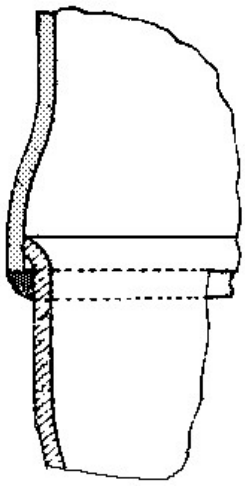

Informative references

Attention is drawn to the following places, which may be of interest for search:

Closures secured by soldering, welding, or otherwise uniting opposed surfaces	B65D 17/12

B65D 7/40

[N: IPC2] with walls formed with filling or emptying apertures

Definition statement

This subclass/group covers:

Illustrative example of subject matter classified in this group:

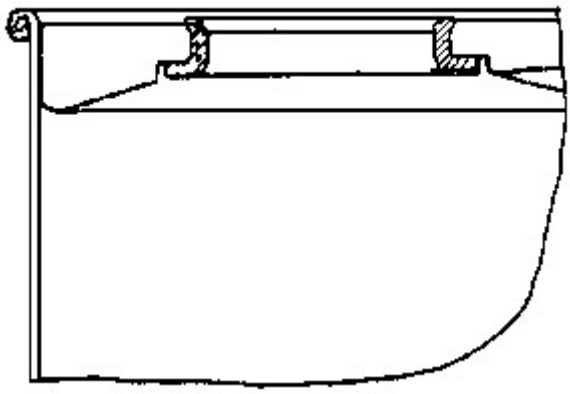

References relevant to classification in this group

This subclass/group does not cover:

For plastic barrels	B65D 1/20, B65D 11/08

Informative references

Attention is drawn to the following places, which may be of interest for search:

Casks, barrels, or drums in their entirety, e.g. beer barrels	B65D 7/045

B65D 7/46

[N: IPC2] Corrugations

Definition statement

This subclass/group covers:

Illustrative example of subject matter classified in this group:

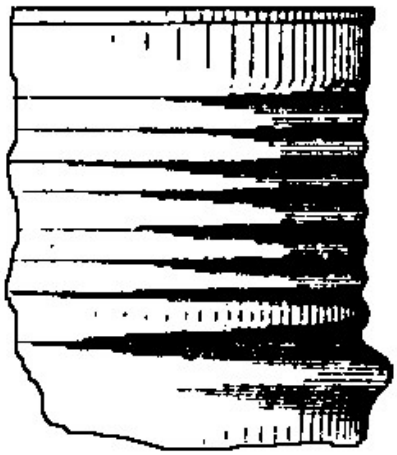

B65D 7/48

[N: IPC2] Local reinforcements, e.g. adjacent closures

Informative references

Attention is drawn to the following places, which may be of interest for search:

Lids secured to an intermediate ring or like annular member fixed to the container mouth	B65D 2543/00435

B65D 9/00

[N: IPC2] Containers having bodies formed by interconnecting or uniting two or more rigid, or substantially rigid, components made wholly or mainly of wood or substitutes therefor

B65D 9/04

[N: IPC2] made up of staves, e.g. barrels for liquids [N: (thermally insulated barrels, B65D 81/3802)]

Definition statement

This subclass/group covers:

Illustrative example of subject matter classified in this group:

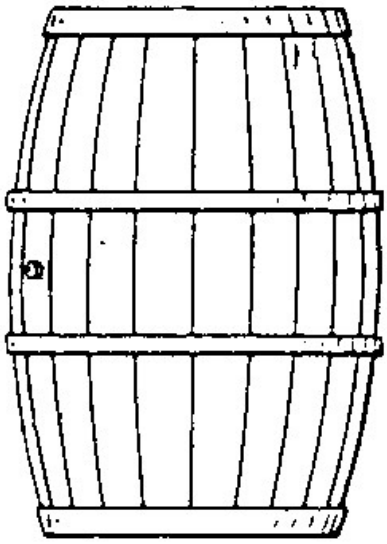

B65D 9/06

[N: IPC2] Boxes or crates of polygonal cross-section

References relevant to classification in this group

This subclass/group does not cover:

Bottle crates made in one piece	B65D 1/243
Baskets or like containers made in interwoven or intermeshing flexible wooden material or by attaching thin wooden strips to a supporting framework	B65D 9/10
Bottle crates not made in one piece	B65D 85/305

B65D 9/10

[N: IPC2] Baskets or like containers made in interwoven or intermeshing flexible wooden material or by attaching thin wooden strips to a supporting framework

Definition statement

This subclass/group covers:

Illustrative example of subject matter classified in this group:

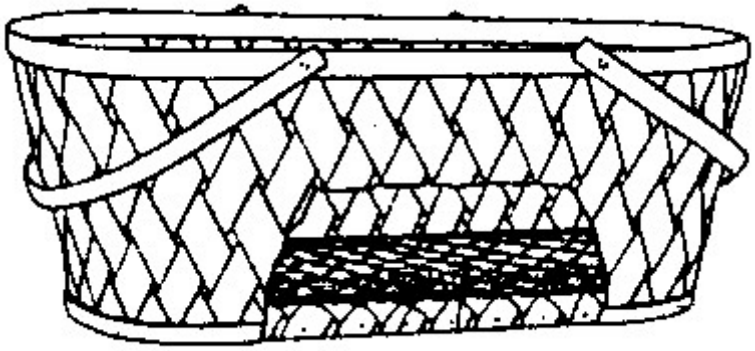

B65D 9/14

[N: IPC2] with all parts hinged together

Definition statement

This subclass/group covers:
Illustrative example of subject matter classified in this group:

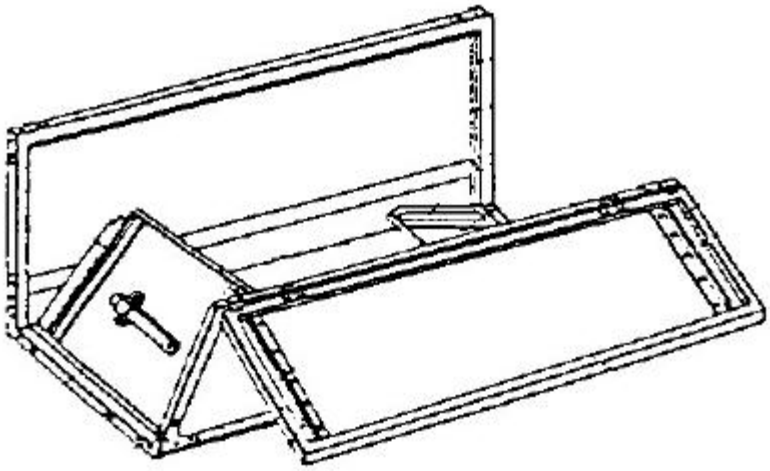

B65D 9/16

[N: IPC2] wire-bound boxes

Definition statement

This subclass/group covers:
Illustrative example of subject matter classified in this group:

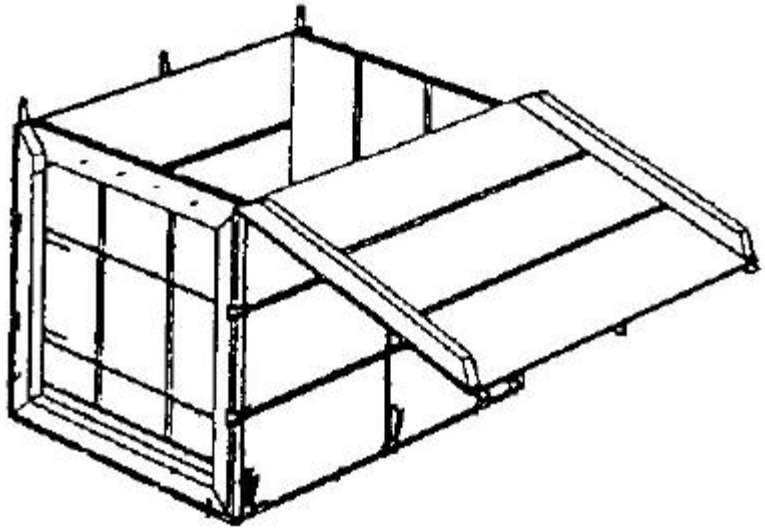

B65D 9/18

[IPC2] with some parts detachable and other parts hinged together

Definition statement

This subclass/group covers:

Illustrative example of subject matter classified in this group:

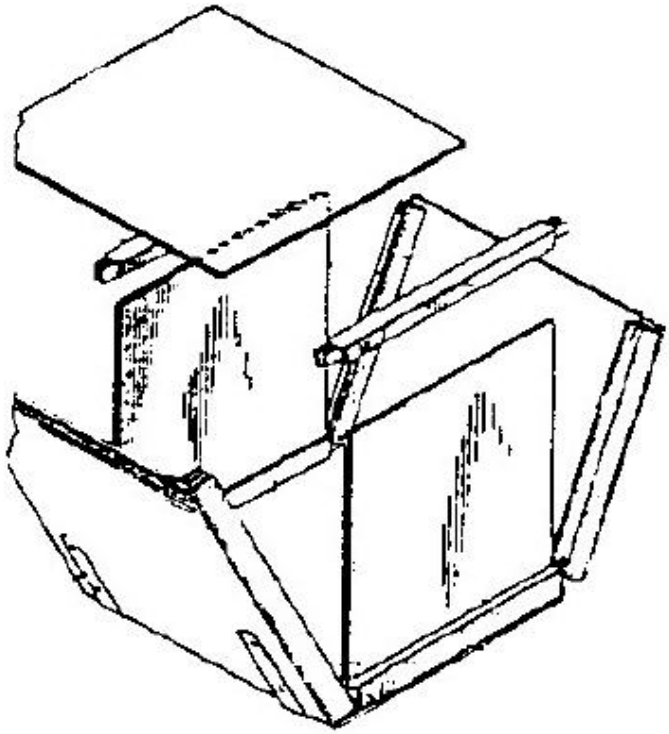

B65D 9/20

[IPC2] wire-bound boxes

Definition statement

This subclass/group covers:
Illustrative example of subject matter classified in this group:

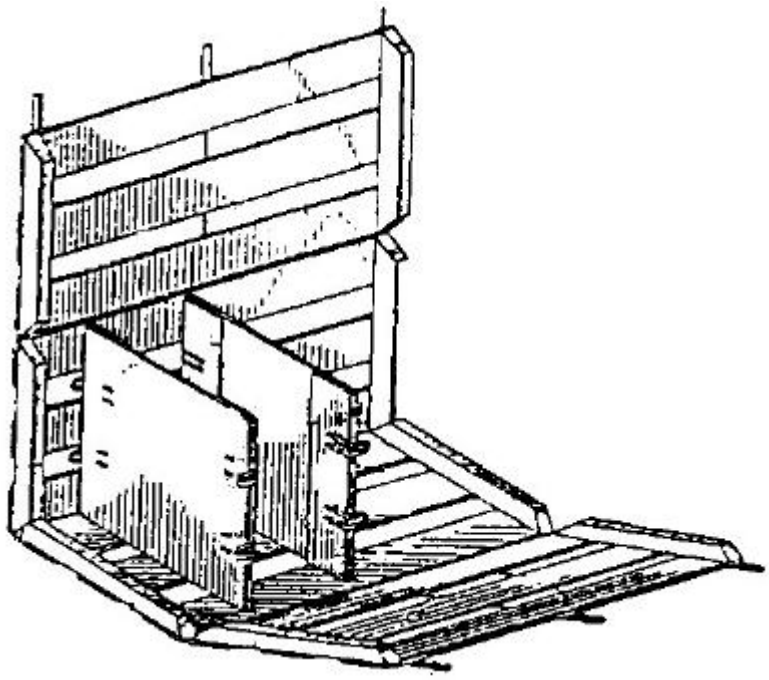

B65D 9/24

[N: IPC2] separate from container walls

Definition statement

This subclass/group covers:
Illustrative example of subject matter classified in this group:

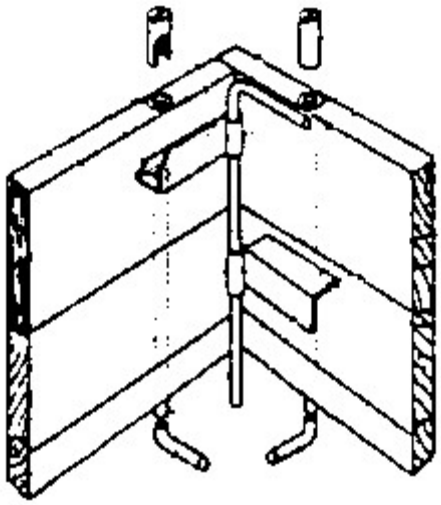

B65D 9/28

[N: IPC2] with bottoms movable under influence of contents

References relevant to classification in this group

This subclass/group does not cover:

Containers or packages provided with a piston or with a movable bottom or partition having approximately the same section as the container, moved by a spring-like mechanism	B65D 83/0038
Containers or packages provided with a piston or with a movable bottom or partition having approximately the same section as the container, the piston or movable bottom being pulled upwards to dispense the contents	B65D 83/005

Informative references

Attention is drawn to the following places, which may be of interest for search:

Containers of variable capacity	B65D 21/08

B65D 9/30

[N: IPC2] Applications of laminates as wall material, e.g. plywood

Definition statement

This subclass/group covers:
Illustrative example of subject matter classified in this group:

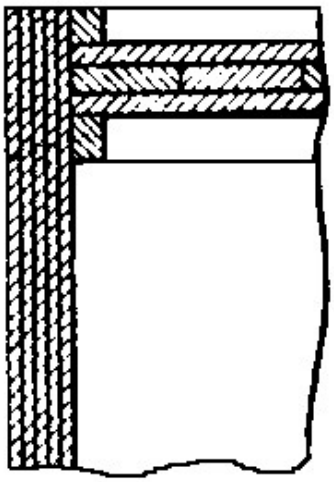

B65D 9/34

[N: IPC2] Joints; Local reinforcements

Definition statement

This subclass/group covers:
Illustrative example of subject matter classified in this group:

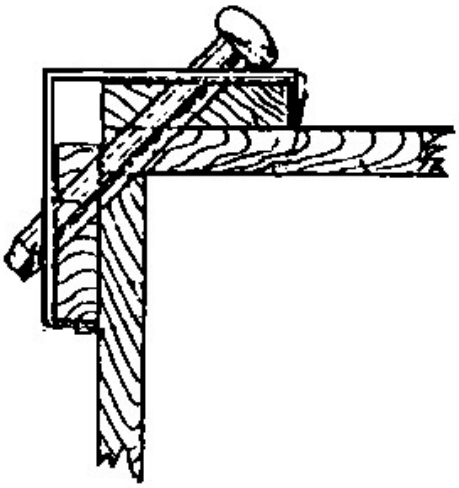

B65D 9/38

[N: IPC2] Metal bands or strips

Definition statement

This subclass/group covers:
Illustrative example of subject matter classified in this group:

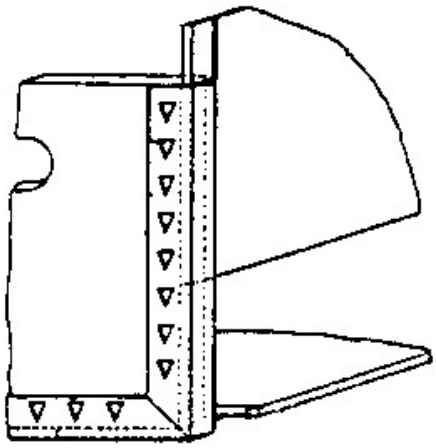

B65D 11/04

[N: IPC2] Bottles or similar containers with necks or like restricted apertures designed for pouring contents [N: (thermally insulated B65D 81/3837)]

Definition statement

This subclass/group covers:
Illustrative example of subject matter classified in this group:

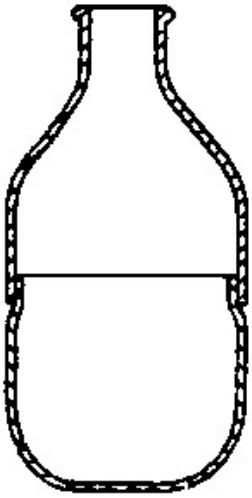

B65D 11/06

[N: IPC2] Drums or barrels [N: (thermally insulated B65D 81/3802)]

Definition statement

This subclass/group covers:
Illustrative example of subject matter classified in this group:

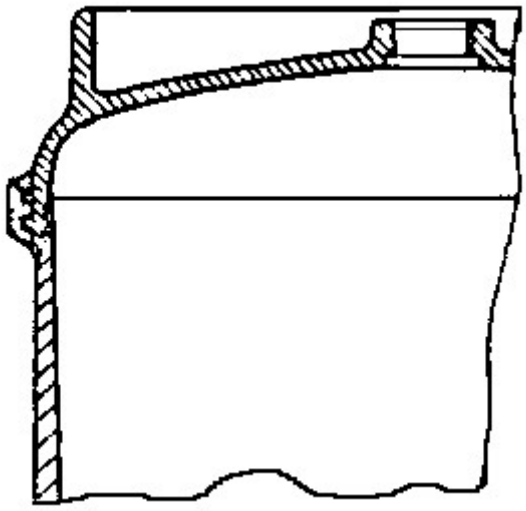

B65D 11/08

[N: IPC2] Arrangements of filling or discharging apertures

Definition statement

This subclass/group covers:
Illustrative example of subject matter classified in this group:

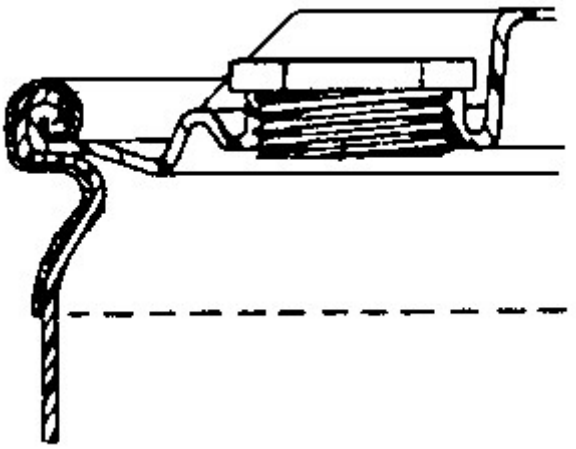

References relevant to classification in this group

This subclass/group does not cover:

For one piece plastic drums	B65D 1/20
For metal drums	B65D 7/40

B65D 11/10

[N: IPC2] of polygonal cross-section [N: and all parts being permanently connected to each other (B65D 11/18 takes precedence)]

References relevant to classification in this group

This subclass/group does not cover:

Bottle crates	B65D 1/243, B65D 85/305
Collapsible	B65D 11/18

B65D 11/105

[N: the container being formed by two mating U-shaped halves connected to each other after a rotation of 90 degrees]

Definition statement

This subclass/group covers:

Illustrative example of subject matter classified in this group:

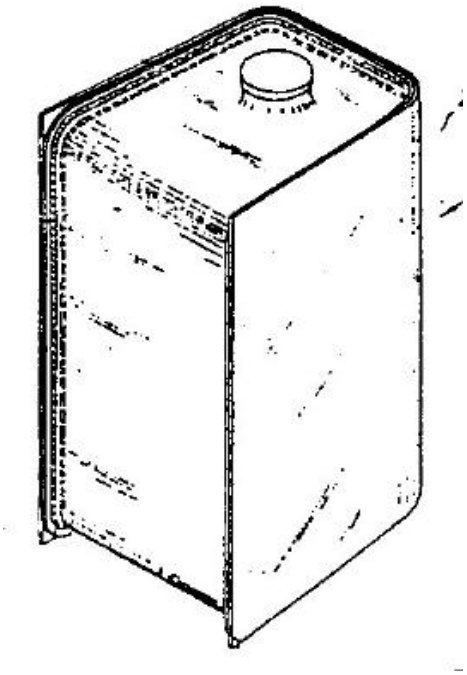

Informative references

Attention is drawn to the following places, which may be of interest for search:

The container being formed by two mating halves the two mating halves being U-shaped and connected to each other after a rotation of 90 degrees	B65D 11/1886

B65D 11/12

[N: IPC2] of drawer-and-shell type

References relevant to classification in this group

This subclass/group does not cover:

Made of paper	B65D 5/38

B65D 11/14

[N: IPC2] of skeleton or apertured construction, e.g. baskets or carriers made up of interconnected spaced bands, rods, or strips

Definition statement

This subclass/group covers:

Illustrative example of subject matter classified in this group:

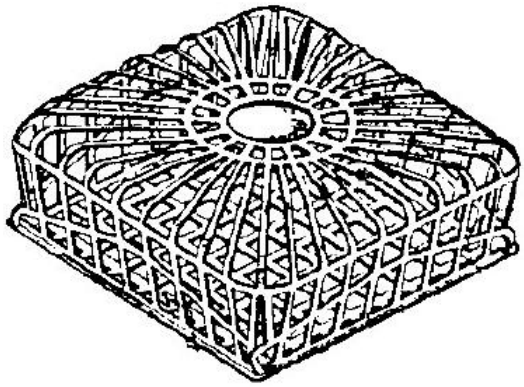

Informative references

Attention is drawn to the following places, which may be of interest for search:

Baskets or like containers of skeleton or apertured construction	B65D 1/38
Net-like containers made of plastics material	B65D 29/04

B65D 11/16

[N: IPC2] with double walls

Definition statement

This subclass/group covers:

Illustrative example of subject matter classified in this group:

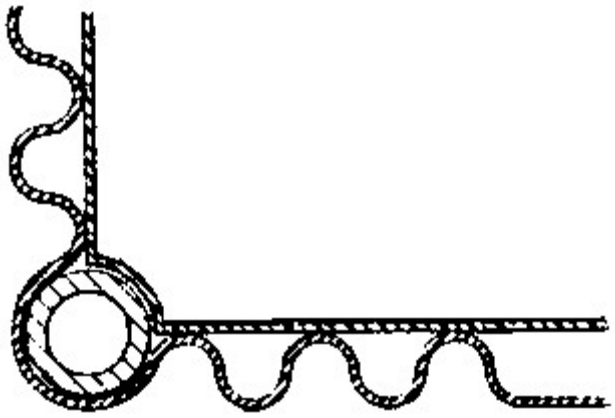

B65D 11/18

[N: IPC2] collapsible, i.e. with walls hinged together or detachably connected

References relevant to classification in this group

This subclass/group does not cover:

Made of one piece	B65D 1/225

B65D 11/1806

[N: comprising two side walls hinged to a base panel and two other side walls being extensions hinged to said side walls]

Definition statement

This subclass/group covers:

Illustrative example of subject matter classified in this group:

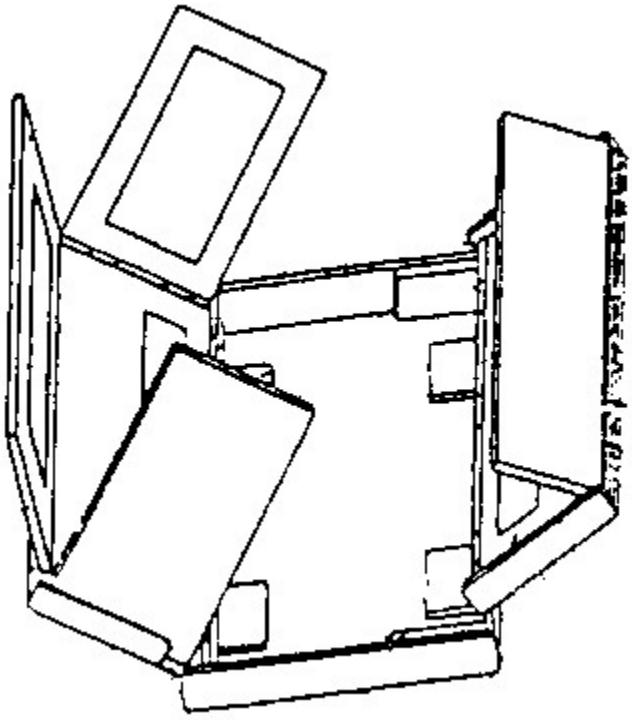

References relevant to classification in this group

This subclass/group does not cover:

Made of one piece	B65D 1/225

B65D 11/1813

[N: and one or more side walls being foldable along a median line]

References relevant to classification in this group

This subclass/group does not cover:

Made of one piece	B65D 1/225

B65D 11/182

[N: comprising two side walls hinged along the sides of a base panel and to an upper frame and two other side walls being hinged only to the upper frame]

References relevant to classification in this group

This subclass/group does not cover:

Made of one piece	B65D 1/225

B65D 11/1826

[N: and one or more side walls being foldable along a median line]

Definition statement

This subclass/group covers:

Illustrative example of subject matter classified in this group:

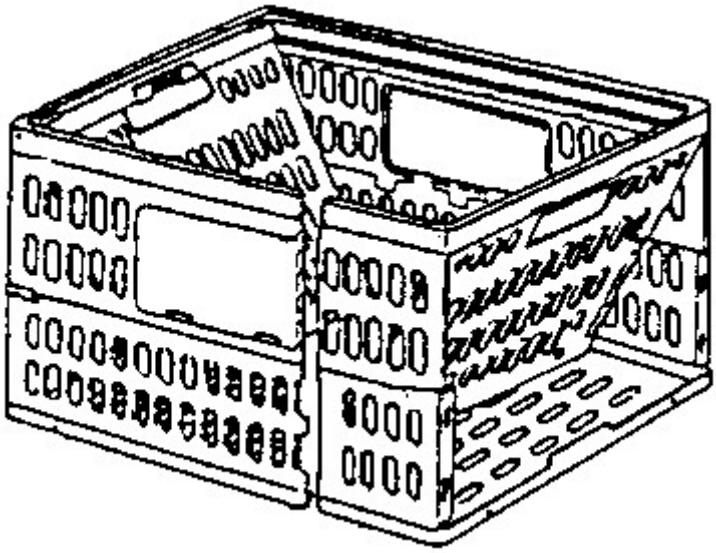

References relevant to classification in this group

This subclass/group does not cover:

Made of one piece	B65D 1/225

B65D 11/1833

[N: whereby all side walls are hingedly connected to the base panel (B65D 11/186 takes precedence)]

Definition statement

This subclass/group covers:

Illustrative example of subject matter classified in this group:

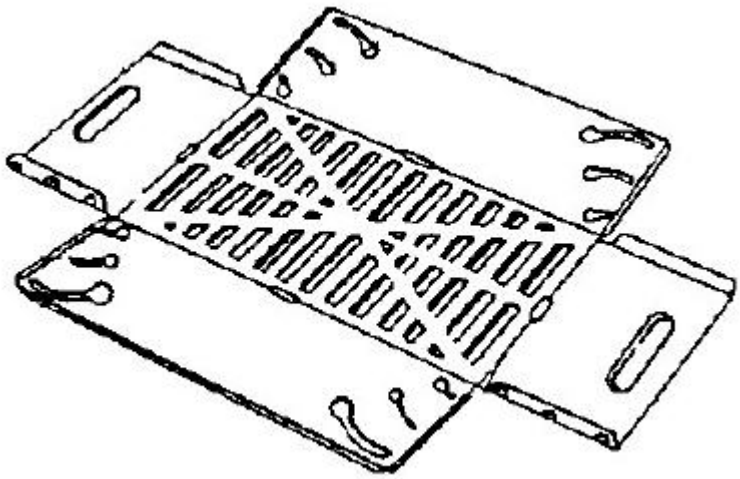

References relevant to classification in this group

This subclass/group does not cover:

Made of one piece	B65D 1/225
Whereby all side walls are hingedly connected to the base panel and to each other to allow automatic collapsing and reerecting, e.g. by means of folds provided in the side walls and or in the base panel	B65D 11/186

B65D 11/184

[N: and one or more side walls being foldable along a median line]

References relevant to classification in this group

This subclass/group does not cover:

Made of one piece	B65D 1/225

B65D 11/1846

[N: whereby all side walls are hingedly connected to each other (B65D 11/186 takes precedence)]

Definition statement

This subclass/group covers:

Illustrative example of subject matter classified in this group:

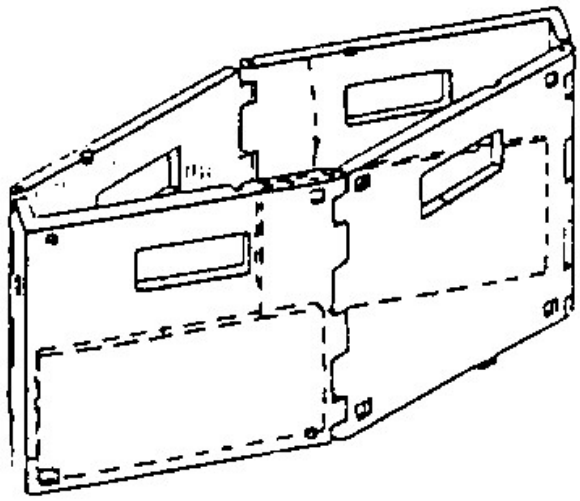

References relevant to classification in this group

This subclass/group does not cover:

Made of one piece	B65D 1/225
Whereby all side walls are hingedly connected to the base panel and to each other to allow automatic collapsing and reerecting, e.g. by means of folds provided in the side walls and or in the base panel	B65D 11/186

B65D 11/1853

[N: and one or more side walls being foldable along a median line]

References relevant to classification in this group

This subclass/group does not cover:

Made of one piece	B65D 1/225

B65D 11/186

[N: whereby all side walls are hingedly connected to the base panel and to each other to allow automatic collapsing and reerecting, e.g. by means of folds provided in the side walls and or in the base panel]

Definition statement

This subclass/group covers:

Illustrative example of subject matter classified in this group:

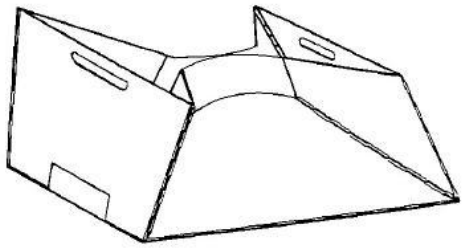

References relevant to classification in this group

This subclass/group does not cover:

Made of one piece	B65D 1/225

B65D 11/1866

[N: with detachable components (B65D 11/1893 takes precedence)]

References relevant to classification in this group

This subclass/group does not cover:

Collapsible, with semidetachable components	B65D 11/1893

B65D 11/1873

[N: all walls are detached from each other to collapse the container]

Definition statement

This subclass/group covers:

Illustrative example of subject matter classified in this group:

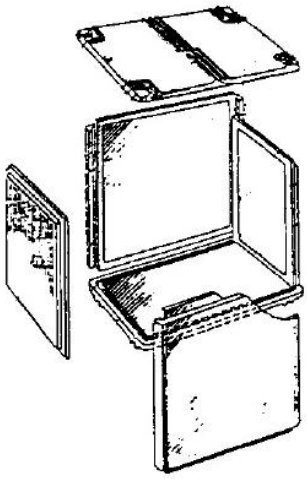

References relevant to classification in this group

This subclass/group does not cover:

Modular elements for containers of variable capacity	B65D 21/083

B65D 11/188

[N: the container being formed by two mating halves]

Definition statement

This subclass/group covers:

Illustrative example of subject matter classified in this group:

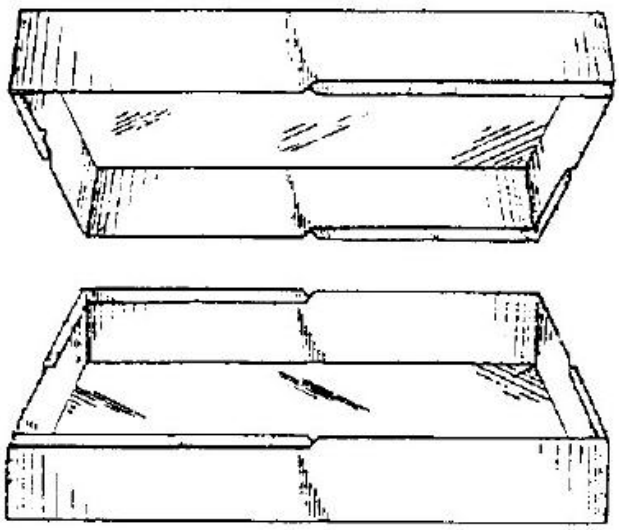

References relevant to classification in this group

This subclass/group does not cover:

Permanently connected	B65D 11/10

Informative references

Attention is drawn to the following places, which may be of interest for search:

Nestable or stackable container parts forming a receptacle when one part is inverted upon the other	B65D 21/0234

B65D 11/1886

[N: the two mating halves being U-shaped and connected to each other after a rotation of 90 degrees]

Definition statement

This subclass/group covers:

Illustrative example of subject matter classified in this group:

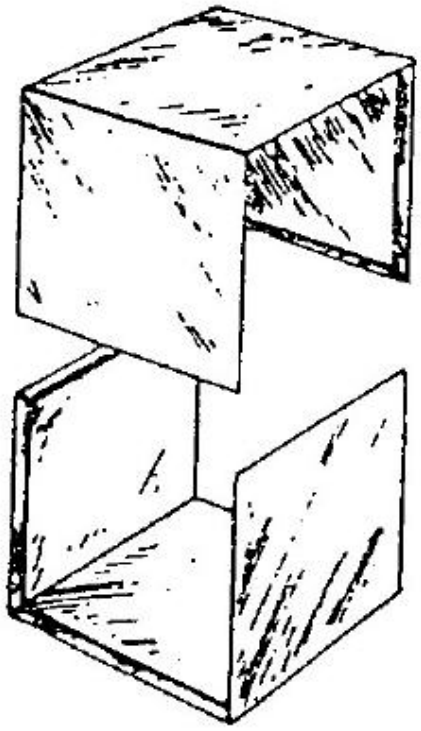

Informative references

Attention is drawn to the following places, which may be of interest for search:

The container being formed by two mating U-shaped halves connected to each other after a rotation of 90 degrees	B65D 11/105

B65D 11/1893

[N: with semidetachable components, i.e. with some side walls hinged to each other or to a base panel and the other side walls being detachable to allow collapsing of the container]

Definition statement

This subclass/group covers:

Illustrative example of subject matter classified in this group:

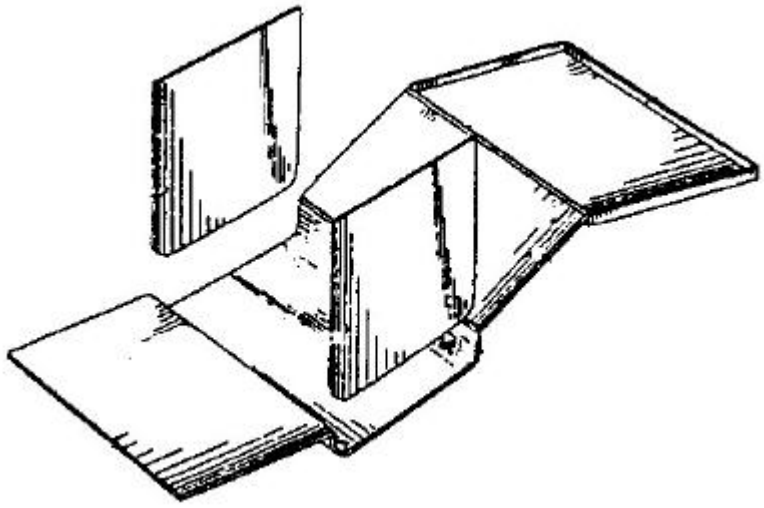

B65D 11/24

[N: IPC2] Corrugations

Definition statement

This subclass/group covers:

Illustrative example of subject matter classified in this group:

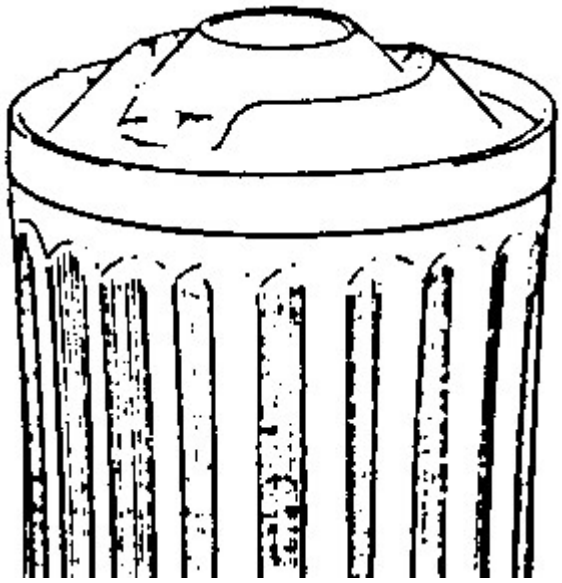

B65D 11/26

[N: IPC2] Local reinforcements, e.g. adjacent to closures

Definition statement

This subclass/group covers:
Illustrative example of subject matter classified in this group:



B65D 11/28

[N: IPC2] Metal reinforcements, e.g. metal frames

Definition statement

This subclass/group covers:
Illustrative example of subject matter classified in this group:

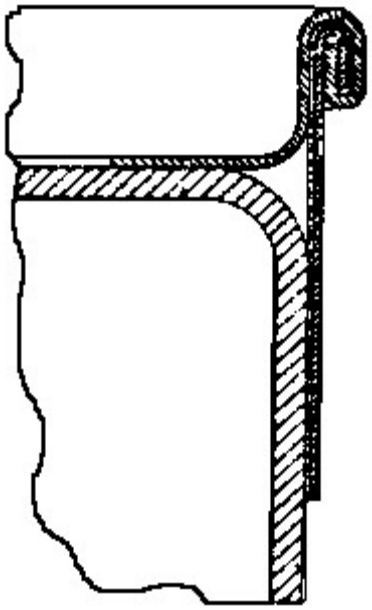

B65D 13/00

Containers having bodies formed by interconnecting two or more rigid, or substantially rigid, components made wholly or mainly of the same material, other than metal, plastics, wood, or substitutes therefor (pallets B65D 19/00)

B65D 13/02

of glass, pottery, or other ceramic material

Definition statement

This subclass/group covers:
Illustrative example of subject matter classified in this group:

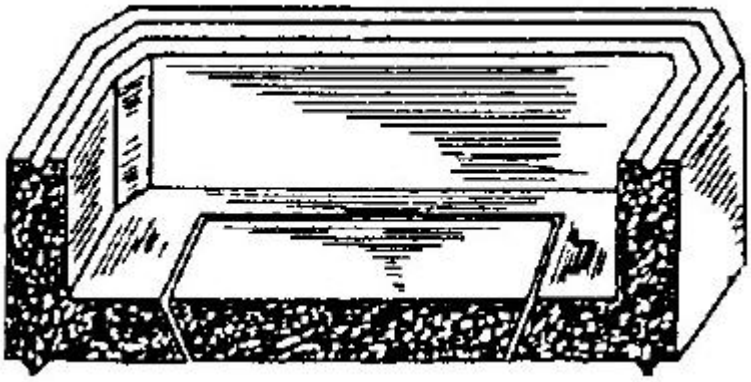

B65D 15/00

[N: IPC2] Containers having bodies formed by interconnecting or uniting two or more rigid, or substantially rigid, sections made of different materials (specially constructed to be opened by cutting, piercing, or tearing, of wall portions B65D 17/00; pallets B65D 19/00)

B65D 15/04

[N: IPC2] with curved, or partially curved, walls made by winding or bending paper

References relevant to classification in this group

This subclass/group does not cover:

Made wholly of paper	B65D 3/00

B65D 15/06

[N: IPC2] with end walls made of metal

Definition statement

This subclass/group covers:

Illustrative example of subject matter classified in this group:

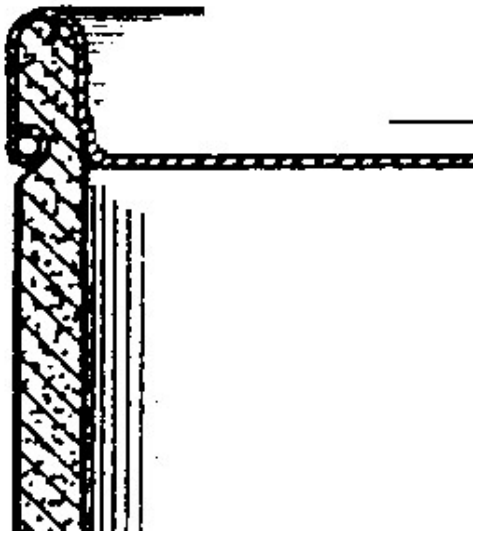

B65D 15/08

[N: IPC2] with end walls made of plastics material

Definition statement

This subclass/group covers:
Illustrative example of subject matter classified in this group:

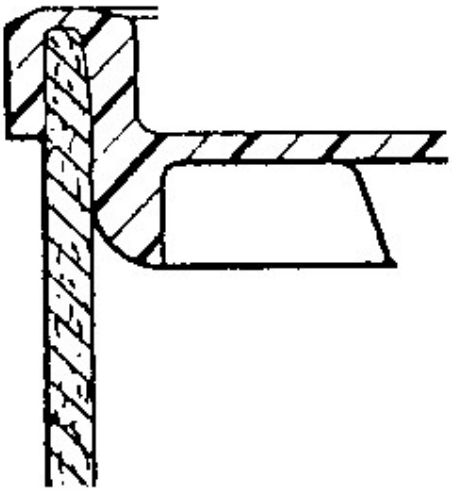

B65D 15/12

[N: IPC2] with end walls made of paper

Definition statement

This subclass/group covers:
Illustrative example of subject matter classified in this group:

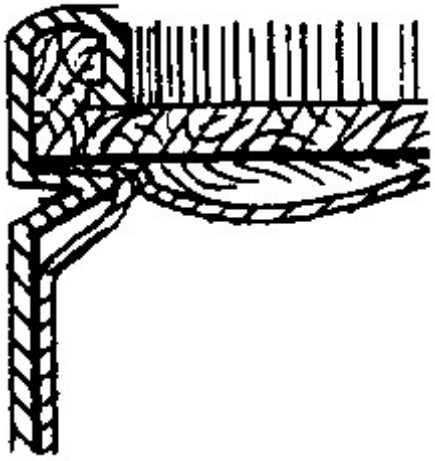

B65D 15/14

[N: IPC2] with end walls made of plastics material

Definition statement

This subclass/group covers:
Illustrative example of subject matter classified in this group:

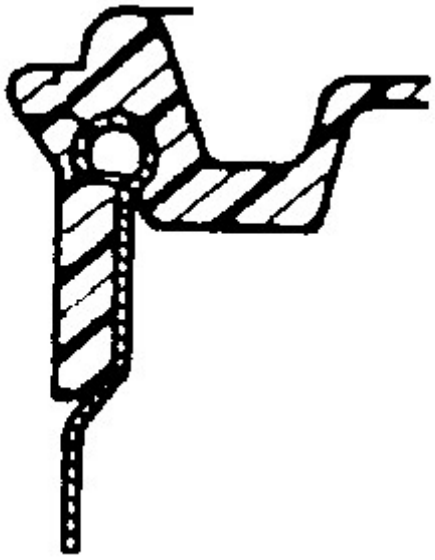

B65D 15/18

[N: IPC2] with end walls made of metal

Definition statement

This subclass/group covers:

Illustrative example of subject matter classified in this group:

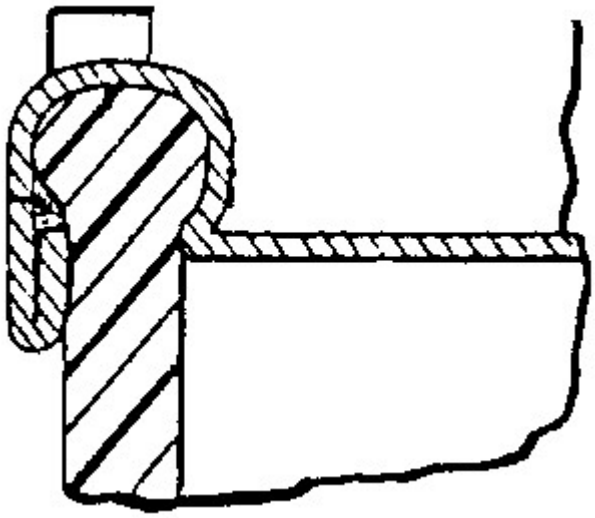

B65D 15/20

[N: IPC2] with end walls made of paper

Definition statement

This subclass/group covers:
Illustrative example of subject matter classified in this group:

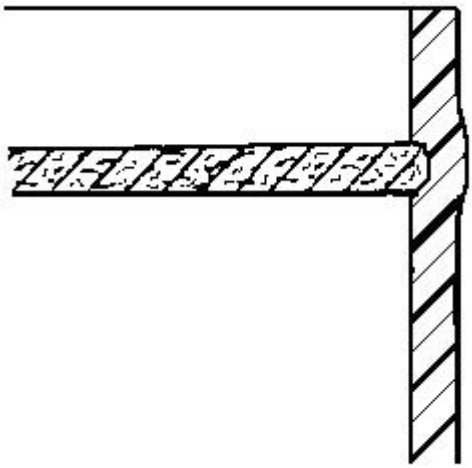

B65D 15/22

[N: IPC2] of polygonal cross-section

Definition statement

This subclass/group covers:
Illustrative example of subject matter classified in this group:

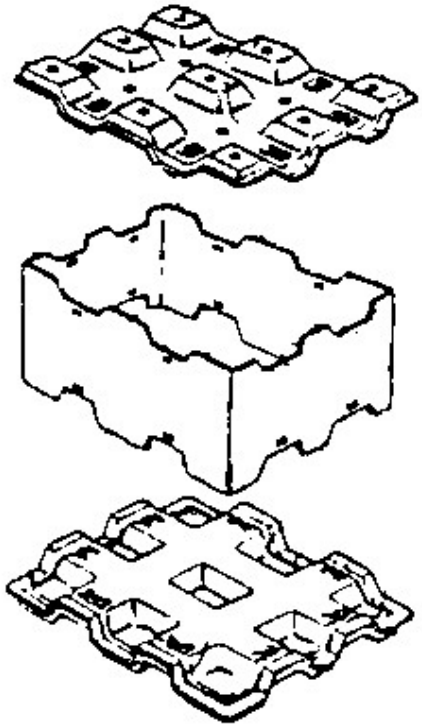

B65D 17/00

Containers specially constructed to be opened by cutting or piercing, or by tearing of frangible member or portion (opening devices for containers made by winding, bending, or folding paper B65D 3/00, B65D 5/00; frangible inner closure members associated with caps, lids, or covers B65D 51/20; opening devices added or incorporated during filling or closing of containers B65D 77/30; separate devices for opening closed containers B67B 7/00)

Informative references

Attention is drawn to the following places, which may be of interest for search:

Opening arrangements or devices for containers made by winding, bending or folding paper	B65D 3/00, B65D 5/00
Opening devices added or incorporated during filling or closing of containers	B65D 77/30
Separate devices for opening closed	B67B 7/00

containers	

B65D 17/06

[N: IPC2] Integral, or permanently secured, end or side closures

References relevant to classification in this group

This subclass/group does not cover:

Integral frangible closures	B65D 1/0238

B65D 17/08

[N: IPC2] Closures secured by folding or rolling and pressing

References relevant to classification in this group

This subclass/group does not cover:

Reusable closures	B65D 43/0233, B65D 43/0285

Informative references

Attention is drawn to the following places, which may be of interest for search:

With permanent connections between walls, formed by rolling, or by rolling and pressing	B65D 7/36
By applying separate lids or covers the cover being maintained on the container by mechanical means	B65D 77/2004

B65D 17/10

[N: IPC2] with interposed packing rings

References relevant to classification in this group

This subclass/group does not cover:

Reusable closures	B65D 43/0233, B65D 43/0285

B65D 17/12

[N: IPC2] Closures secured by soldering, welding, or otherwise uniting opposed surfaces

Informative references

Attention is drawn to the following places, which may be of interest for search:

Formed by soldering, welding, or otherwise uniting opposed surfaces	B65D 7/38

B65D 17/16

[N: IPC2] Opening arrangements or devices incorporated in or attached to, containers [N: (B65D 17/50 takes precedence)]

Definition statement

This subclass/group covers:

Illustrative example of subject matter classified in this group:

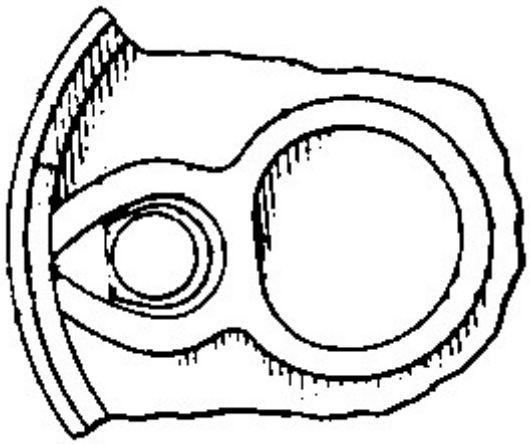

References relevant to classification in this group

This subclass/group does not cover:

With tearing tabs	B65D 17/163, B65D 17/165

Non-integral frangible members applied to, or inserted in, a preformed opening	B65D 17/50
Devices for releasing contents from the container (demoulding)	B65D 25/38

Special rules of classification within this group

The use of available Indexing Codes is mandatory.

B65D 17/161

[N: for tearing along a line or from a point of weakness provided in an end wall]

Definition statement

This subclass/group covers:

Illustrative example of subject matter classified in this group:

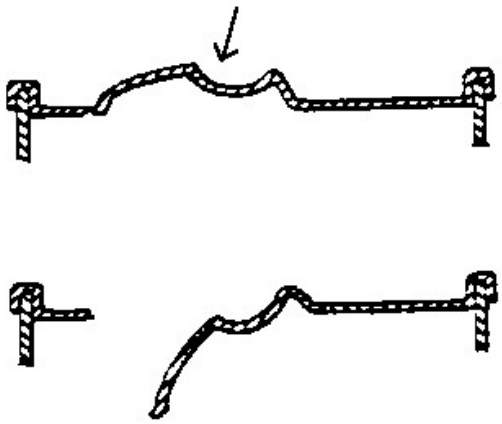

Informative references

Attention is drawn to the following places, which may be of interest for search:

Having frangible closures	B65D 47/10
Whereby venting occurs by manual actuation of the closure or other element by rupturing a portion of the closure	B65D 51/1677

Special rules of classification within this group

The use of available Indexing Codes is mandatory.

B65D 17/163

[N: for opening completely by means of a tearing tab]

Definition statement

This subclass/group covers:
Illustrative example of subject matter classified in this group:

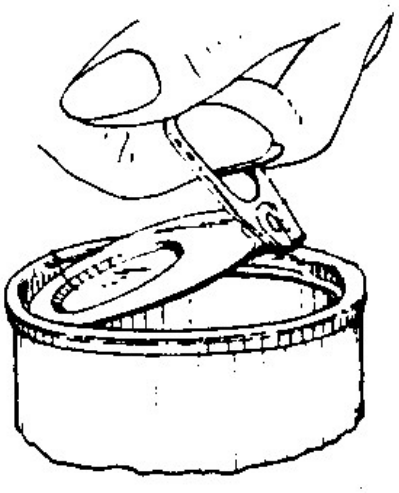

Informative references

Attention is drawn to the following places, which may be of interest for search:

Having frangible closures, membranes with a tearing element	B65D 47/103

Special rules of classification within this group

The use of available Indexing Codes is mandatory.

B65D 17/165

[N: for opening partially by means of a tearing tab]

Definition statement

This subclass/group covers:

Illustrative example of subject matter classified in this group:

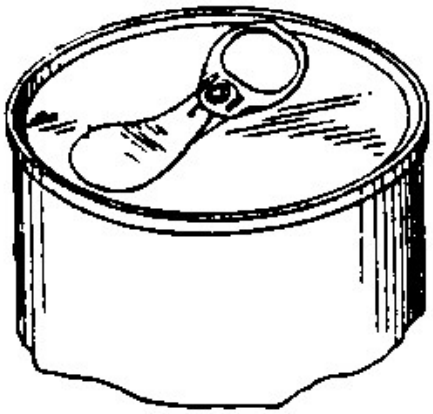

References relevant to classification in this group

This subclass/group does not cover:

With attached reclosing or resealing means	B65D 17/166

Informative references

Attention is drawn to the following places, which may be of interest for search:

Having frangible closures, membranes with a tearing element	B65D 47/103

Special rules of classification within this group

The use of available Indexing Codes is mandatory.

B65D 17/166

[N: and provided with attached means for reclosing or resealing]

Special rules of classification within this group

The use of available Indexing Codes is mandatory.

B65D 17/168

[N: for tearing along a line or from a point of weakness provided in the side wall (B65D 17/20 takes precedence)]

Definition statement

This subclass/group covers:

Illustrative example of subject matter classified in this group:

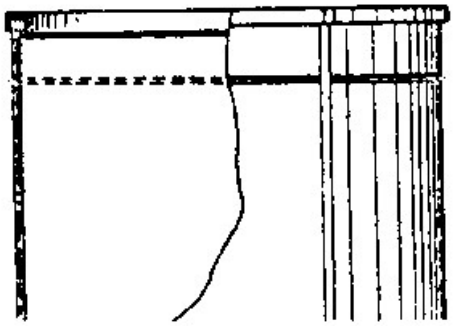

References relevant to classification in this group

This subclass/group does not cover:

For bottles	B65D 1/0223
Tearing-strips or -wires	B65D 17/20

B65D 17/18

[N: IPC2] Attached can-cutting devices

Definition statement

This subclass/group covers:

Illustrative example of subject matter classified in this group:

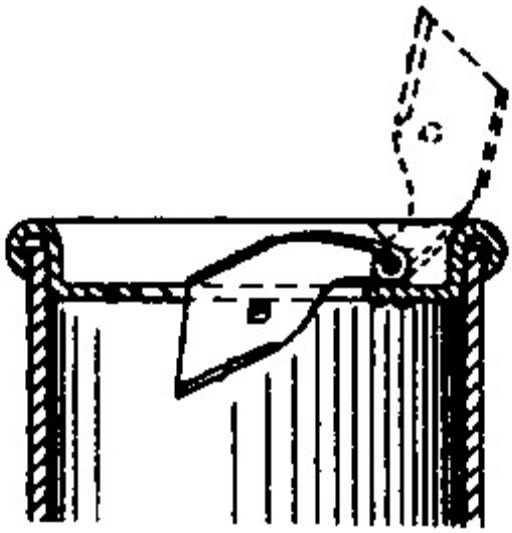

B65D 17/20

[N: IPC2] Tearing-strips or -wires

Definition statement

This subclass/group covers:
Illustrative example of subject matter classified in this group:

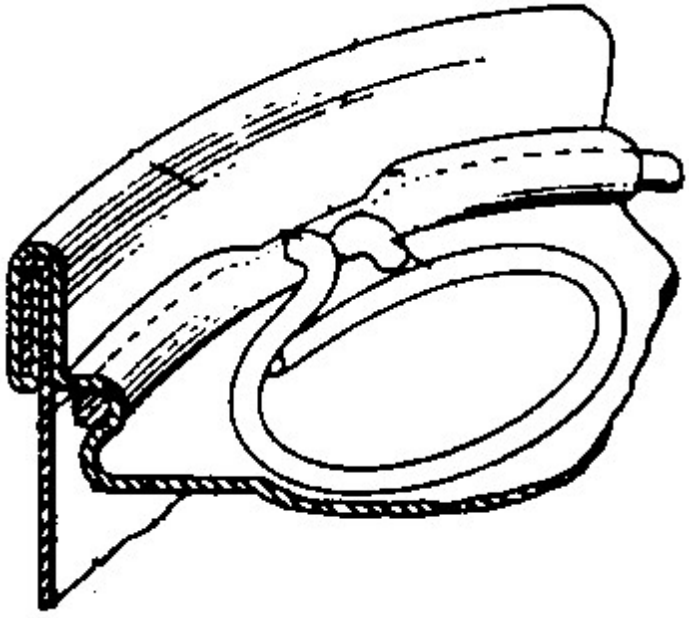

B65D 17/22

[N: IPC2] with tongues or tags for engagement by slotted keys

Definition statement

This subclass/group covers:
Illustrative example of subject matter classified in this group:

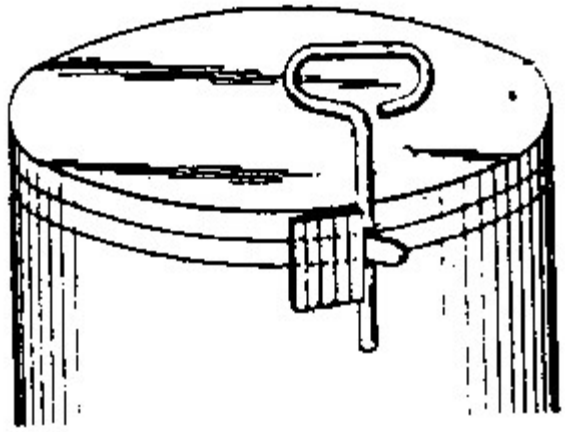

B65D 17/24

[N: IPC2] Lines of weakness

Definition statement

This subclass/group covers:
Illustrative example of subject matter classified in this group:



B65D 17/26

[N: IPC2] Attachments of slotted keys to preserving cans or tins

Definition statement

This subclass/group covers:
Illustrative example of subject matter classified in this group:

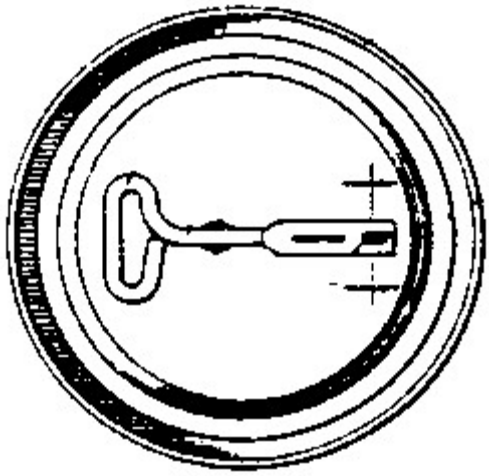

B65D 17/50

Non-integral frangible members applied to, or inserted in, a preformed opening, e.g. tearable strips, plastic plugs

Informative references

Attention is drawn to the following places, which may be of interest for search:

Separate tearable flexible elements covering a discharge opening of a container	B65D 5/708
Separate closure devices for reclosing opened cans or tins, e.g. beer cans	B65D 51/007
Preformed openings provided in a wall portion and covered by a separate removable flexible element	B65D 75/5894

Special rules of classification within this group

The use of available Indexing Codes is mandatory.

B65D 17/501

[N: Flexible tape or foil-like material]

Informative references

Attention is drawn to the following places, which may be of interest for search:

Flexible adhesive strips adapted to seal filling or discharging apertures	B65D 53/08

Special rules of classification within this group

The use of available Indexing Codes is mandatory.

B65D 17/502

[N: applied to the external part of the container wall only (B65D 17/505 takes precedence)]

Definition statement

This subclass/group covers:

Illustrative example of subject matter classified in this group:

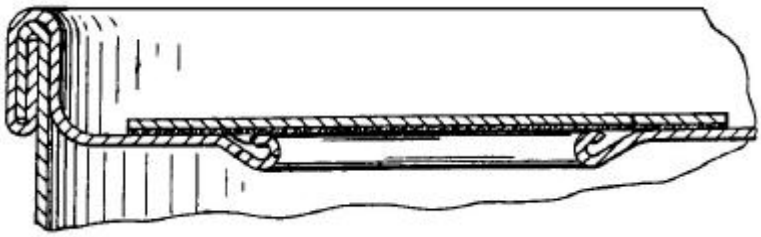

References relevant to classification in this group

This subclass/group does not cover:

Flexible tape or foil-like material applied to the external and internal part of the container wall	B65D 17/505

Informative references

Attention is drawn to the following places, which may be of interest for search:

Flexible adhesive strips adapted to seal filling or discharging apertures	B65D 53/08

Special rules of classification within this group

The use of available Indexing Codes is mandatory.

B65D 17/503

[N: applied to the internal part of the container wall only (B65D 17/505 takes precedence)]

Definition statement

This subclass/group covers:

Illustrative example of subject matter classified in this group:

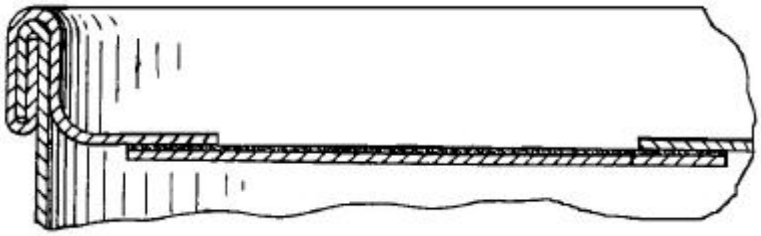

References relevant to classification in this group

This subclass/group does not cover:

Flexible tape or foil-like material applied to the external and internal part of the container wall	B65D 17/505

Informative references

Attention is drawn to the following places, which may be of interest for search:

Flexible adhesive strips adapted to seal filling or discharging apertures	B65D 53/08

Special rules of classification within this group

The use of available Indexing Codes is mandatory.

B65D 17/505

[N: applied to the external and internal part of the container wall]

Definition statement

This subclass/group covers:
Illustrative example of subject matter classified in this group:

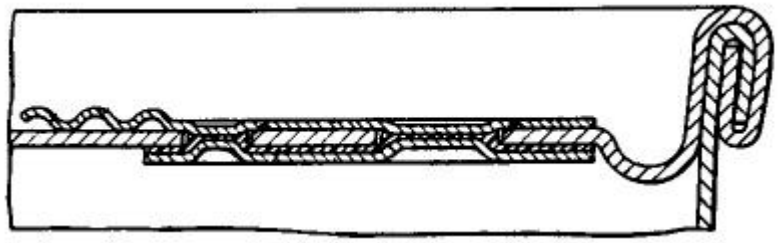

Informative references

Attention is drawn to the following places, which may be of interest for search:

Flexible adhesive strips adapted to seal filling or discharging apertures	B65D 53/08

Special rules of classification within this group

The use of available Indexing Codes is mandatory.

B65D 17/506

[N: Rigid or semi-rigid members, e.g. plugs]

Definition statement

This subclass/group covers:
Illustrative example of subject matter classified in this group:

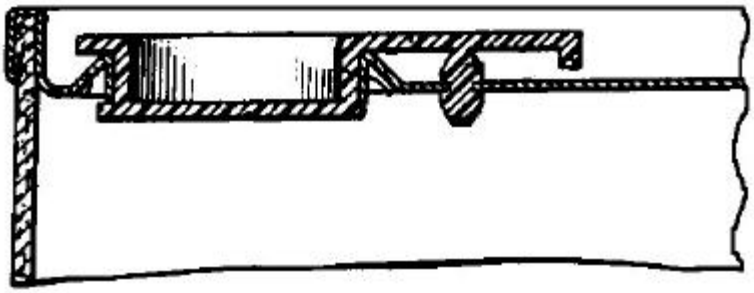

References relevant to classification in this group

This subclass/group does not cover:

Separate closure devices for reclosing opening cans, tins, e.g. beer cans	B65D 51/007

Special rules of classification within this group

The use of available Indexing Codes is mandatory.

B65D 17/507

[N: moulded in situ, e.g. during production of container]

Definition statement

This subclass/group covers:
Illustrative example of subject matter classified in this group:

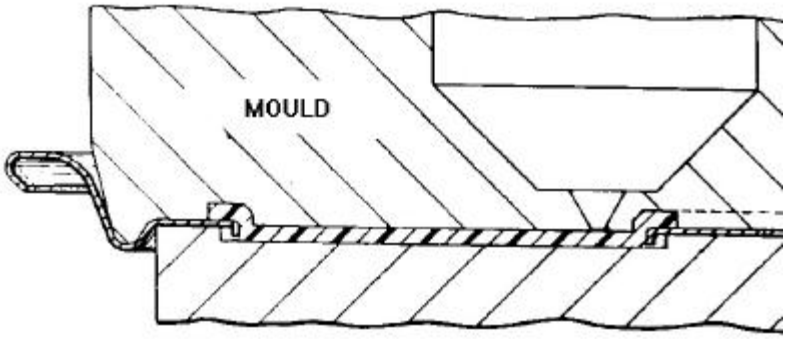

References relevant to classification in this group

This subclass/group does not cover:

Moulding in or through a hole of the article	B29C 45/14344

Special rules of classification within this group

The use of available Indexing Codes is mandatory.

B65D 17/508

[N: and combined with a rigid or semi-rigid, e.g. metallic sheet and a moulded plastic body]

Definition statement

This subclass/group covers:

Illustrative example of subject matter classified in this group:

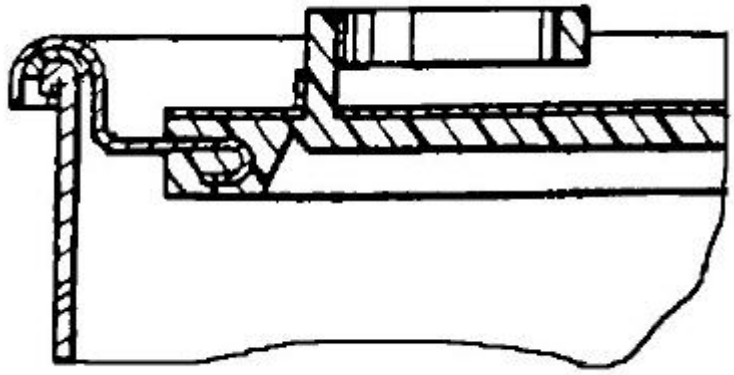

Special rules of classification within this group

The use of available Indexing Codes is mandatory.

B65D 19/00

Pallets or like platforms, with or without side walls, for supporting loads to be lifted or lowered (in devices for lifting or lowering bulky or heavy goods for loading or unloading purposes B66F 9/12)

References relevant to classification in this group

This subclass/group does not cover:

Slip sheets	B65D 19/36
Spillage retaining means	B65D 81/26, B65D 90/24
Trays for tools or instruments for workshops	B25H 3/06
Devices for adapting aircraft pallets to the shape of the aircraft	B64D 9/00
Transport frames for fragile sheets	B65G 49/061

Special rules of classification within this group

The use of available Indexing Codes is mandatory.

B65D 19/0002

[N: Platforms, i.e. load supporting devices without provision for handling by a forklift]

References relevant to classification in this group

This subclass/group does not cover:

For large platforms	B65D 88/129

Informative references

Attention is drawn to the following places, which may be of interest for search:

Rigid pallets without side walls	**B65D19/22**

Special rules of classification within this group

The use of available Indexing Codes is mandatory.

B65D 19/00A2

[N: with feet (B65D 19/0004 takes precedence)]

References relevant to classification in this group

This subclass/group does not cover:

Rigid pallets without side walls	B65D 19/0004

B65D 19/0004

[N: Rigid pallets without side walls]

Informative references

Attention is drawn to the following places, which may be of interest for search:

Rigid pallets without side walls	**B65D19/22**

Special rules of classification within this group

The use of available Indexing Codes is mandatory.

B65D 19/02

Rigid pallets with side walls, e.g. box pallets

Special rules of classification within this group

The use of available Indexing Codes is mandatory.

B65D 19/04

with bodies moulded or otherwise fabricated in one piece

Definition statement

This subclass/group covers:
Illustrative example of subject matter classified in this group:

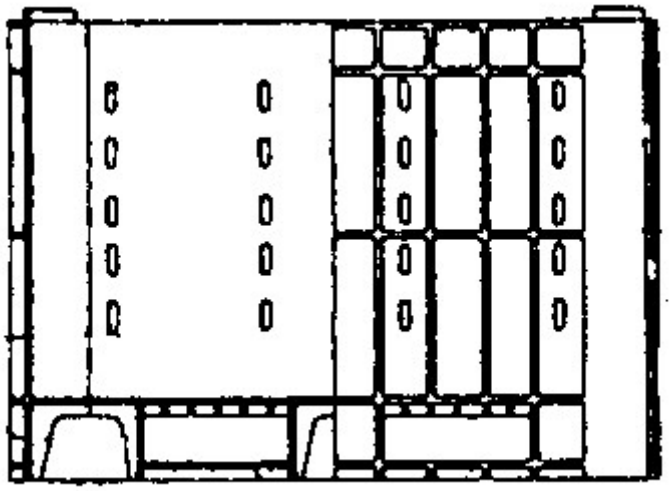

Informative references

Attention is drawn to the following places, which may be of interest for search:

For pallets made of plastic	**L29C555/00**

Special rules of classification within this group

The use of available Indexing Codes is mandatory.

B65D 19/06

with bodies formed by uniting or interconnecting two or more components

Informative references

Attention is drawn to the following places, which may be of interest for search:

For pallets made of plastic	**L29C555/00**

Special rules of classification within this group

The use of available Indexing Codes is mandatory.

B65D 19/08

made wholly or mainly of metal

Definition statement

This subclass/group covers:
Illustrative example of subject matter classified in this group:

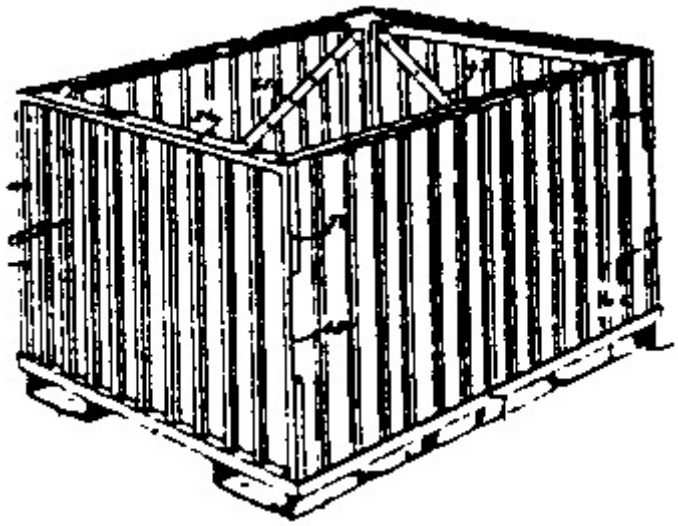

Special rules of classification within this group

The use of available Indexing Codes is mandatory.

B65D 19/10

of skeleton construction, e.g. made of wire

Definition statement

This subclass/group covers:
Illustrative example of subject matter classified in this group:

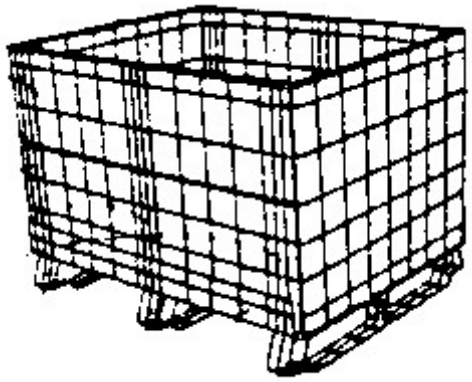

Special rules of classification within this group

The use of available Indexing Codes is mandatory.

B65D 19/12

Collapsible pallets

Definition statement

This subclass/group covers:
Illustrative example of subject matter classified in this group:

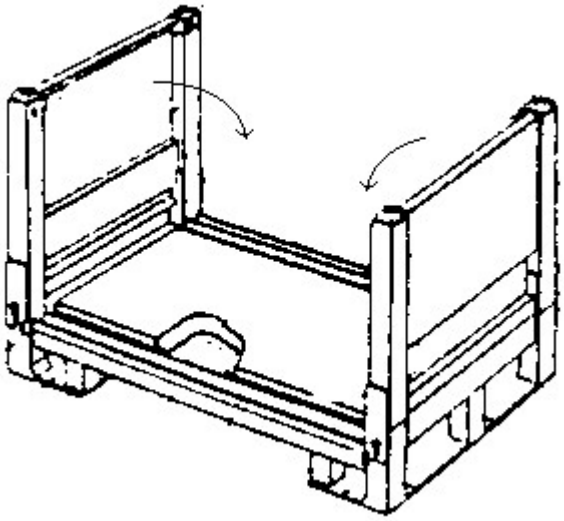

References relevant to classification in this group

This subclass/group does not cover:

Frames, corner posts or pallet converters	B65D 19/385
Large containers	B65D 88/52

Informative references

Attention is drawn to the following places, which may be of interest for search:

Collapsible with all parts hinged together	B65D 7/26

Special rules of classification within this group

The use of available Indexing Codes is mandatory.

B65D 19/14

made wholly or mainly of wood

Definition statement

This subclass/group covers:

Illustrative example of subject matter classified in this group:

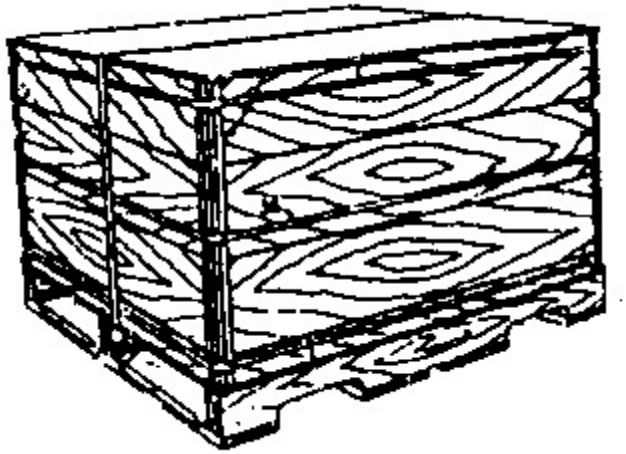

Special rules of classification within this group

The use of available Indexing Codes is mandatory.

B65D 19/16

Collapsible pallets

Definition statement

This subclass/group covers:
Illustrative example of subject matter classified in this group:

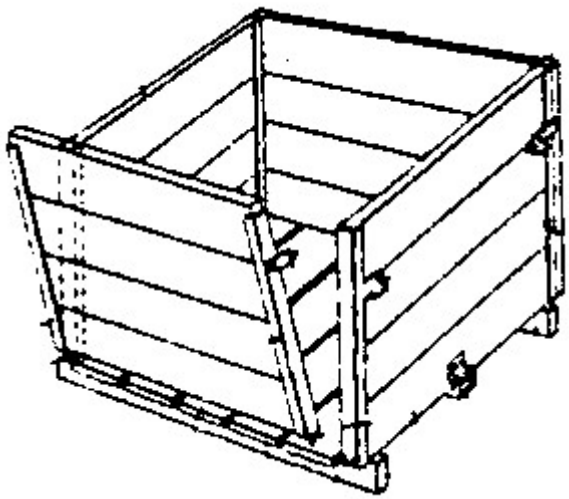

Informative references

Attention is drawn to the following places, which may be of interest for search:

Collapsible with all parts hinged	B65D 9/14

together	

Special rules of classification within this group

The use of available Indexing Codes is mandatory.

B65D 19/18

made wholly or mainly of plastics material

Definition statement

This subclass/group covers:
Illustrative example of subject matter classified in this group:

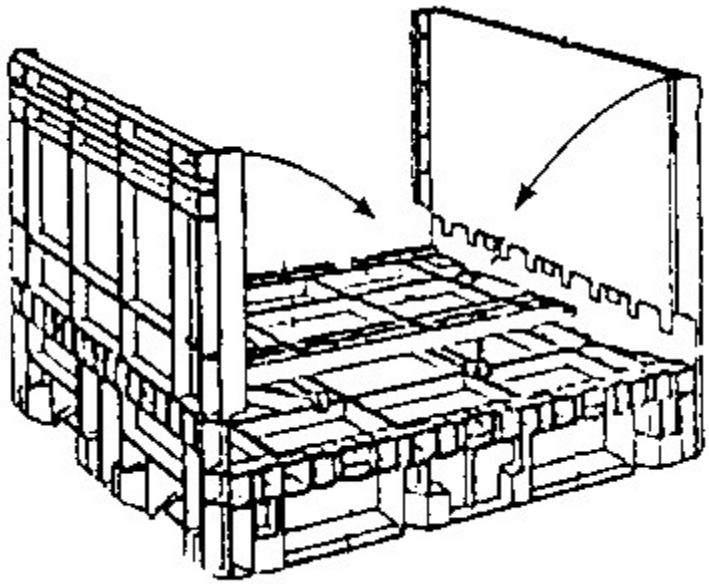

Informative references

Attention is drawn to the following places, which may be of interest for search:

For pallets made of plastic	**L29C555/00**

B65D 19/20

made wholly or mainly of paper

Definition statement

This subclass/group covers:
Illustrative example of subject matter classified in this group:

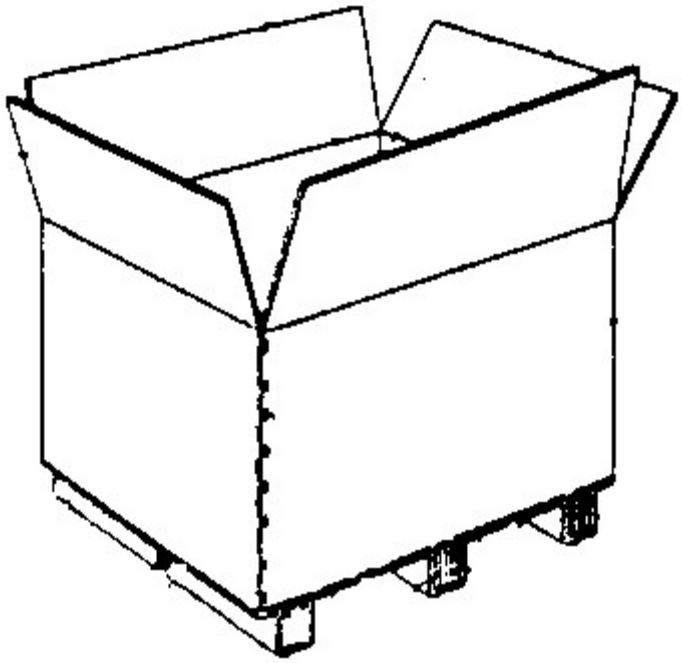

Special rules of classification within this group

The use of available Indexing Codes is mandatory.

B65D 19/22

Rigid pallets without side walls

References relevant to classification in this group

This subclass/group does not cover:

Slip sheets	B65D 19/36

Special rules of classification within this group

To be deleted; replaced by B65D 19/0002, and B65D 19/0004 & sub-groups

- do not use for classification

B65D 19/24

with bodies moulded or otherwise fabricated in one piece

Definition statement

This subclass/group covers:
Illustrative example of subject matter classified in this group:

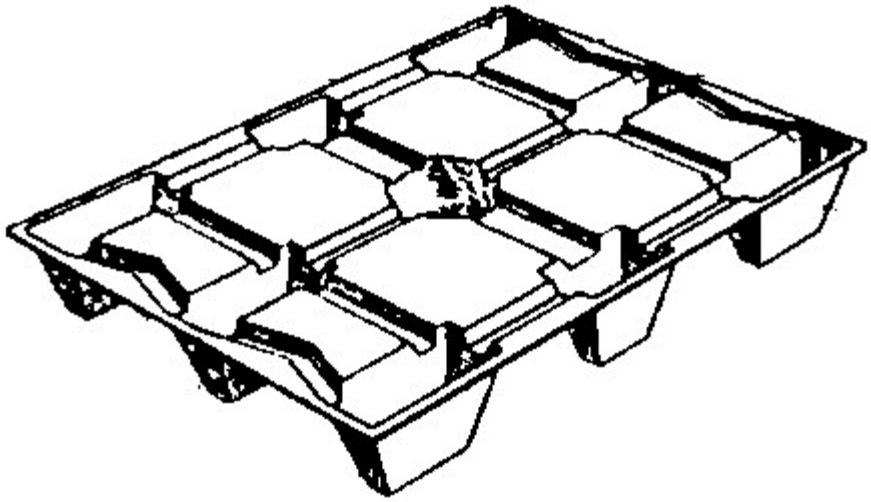

Special rules of classification within this group

To be deleted; replaced by B65D 19/0002, and B65D 19/0004 & sub-groups

- do not use for classification

B65D 19/26

with bodies formed by uniting or interconnecting two or more components

Special rules of classification within this group

To be deleted; replaced by B65D 19/0002, and B65D 19/0004 & sub-groups

- do not use for classification

B65D 19/28

made wholly or mainly of metal

Definition statement

This subclass/group covers:
Illustrative example of subject matter classified in this group:

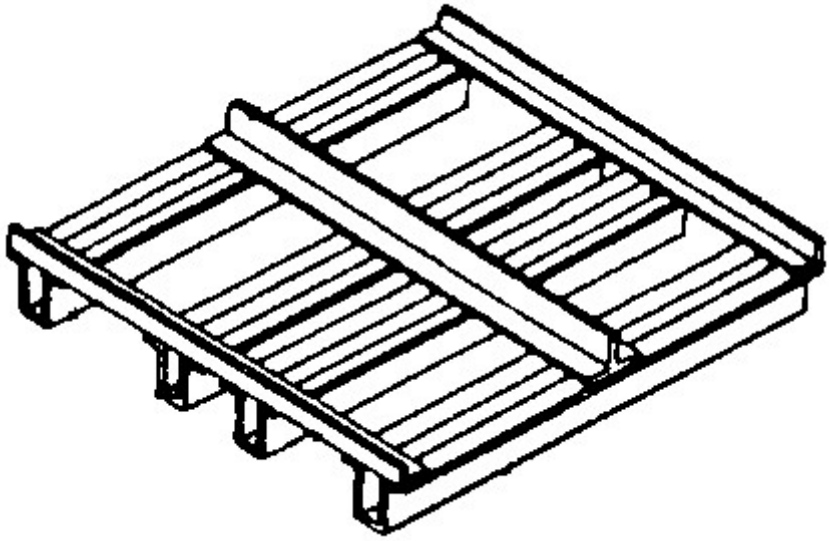

Special rules of classification within this group

To be deleted; replaced by B65D 19/0002, and B65D 19/0004 & sub-groups

- do not use for classification

B65D 19/30

of skeleton construction, e.g. made of wire

Definition statement

This subclass/group covers:
Illustrative example of subject matter classified in this group:

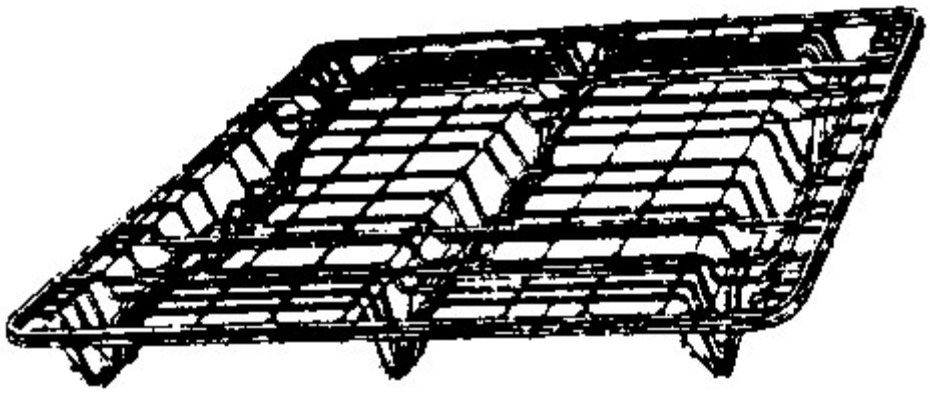

Special rules of classification within this group

To be deleted; replaced by B65D 19/0002, and B65D 19/0004 & sub-groups

- do not use for classification

B65D 19/31

made wholly or mainly of wood

Definition statement

This subclass/group covers:
Illustrative example of subject matter classified in this group:

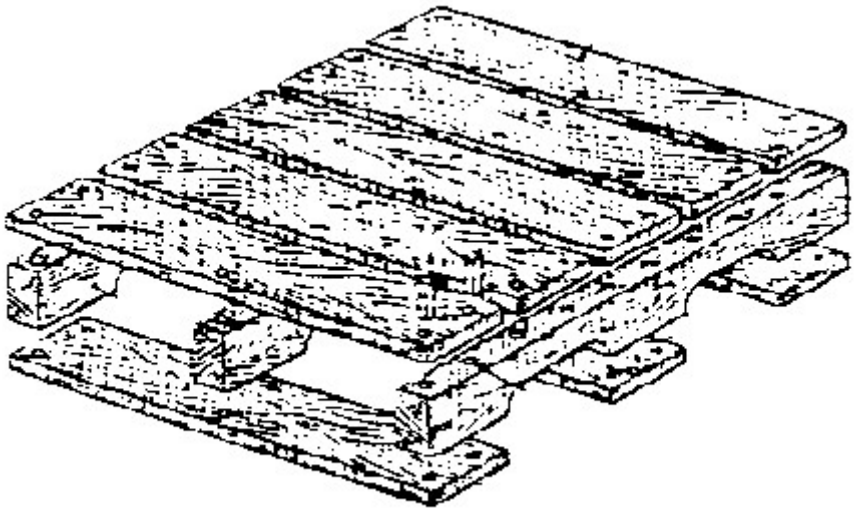

Special rules of classification within this group

To be deleted; replaced by B65D 19/0002, and B65D 19/0004 & sub-groups

- do not use for classification

B65D 19/34

made wholly or mainly of paper

Definition statement

This subclass/group covers:
Illustrative example of subject matter classified in this group:

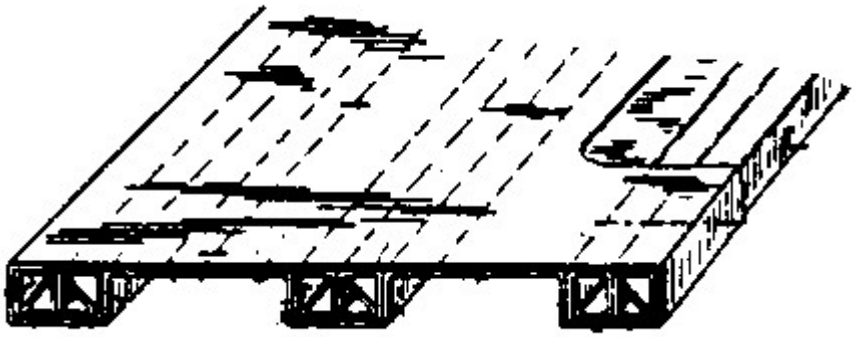

References relevant to classification in this group

This subclass/group does not cover:

Made of one blank	**B65D19/24**

Special rules of classification within this group

To be deleted; replaced by B65D 19/0002, and B65D 19/0004 & sub-groups

- do not use for classification

B65D 19/36

Pallets comprising a flexible load carrier extending between guide elements, e.g. guide tubes

Definition statement

This subclass/group covers:

Illustrative example of subject matter classified in this group:

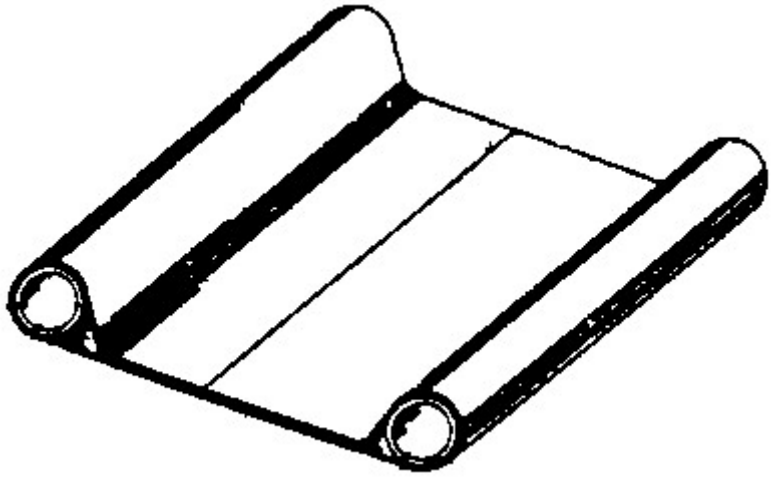

Special rules of classification within this group

The use of available Indexing Codes is mandatory.

B65D 19/38

Details or accessories

References relevant to classification in this group

This subclass/group does not cover:

Anti-slip or anti-skid elements	B65D 19/44

Informative references

Attention is drawn to the following places, which may be of interest for search:

Anti-slip or anti-skid coatings or other elements	B65D 33/005

Special rules of classification within this group

The use of available Indexing Codes is mandatory.

B65D 19/385

[N: Frames, corner posts or pallet converters, e.g. for facilitating stacking of charged pallets]

Definition statement

This subclass/group covers:

Illustrative example of subject matter classified in this group:

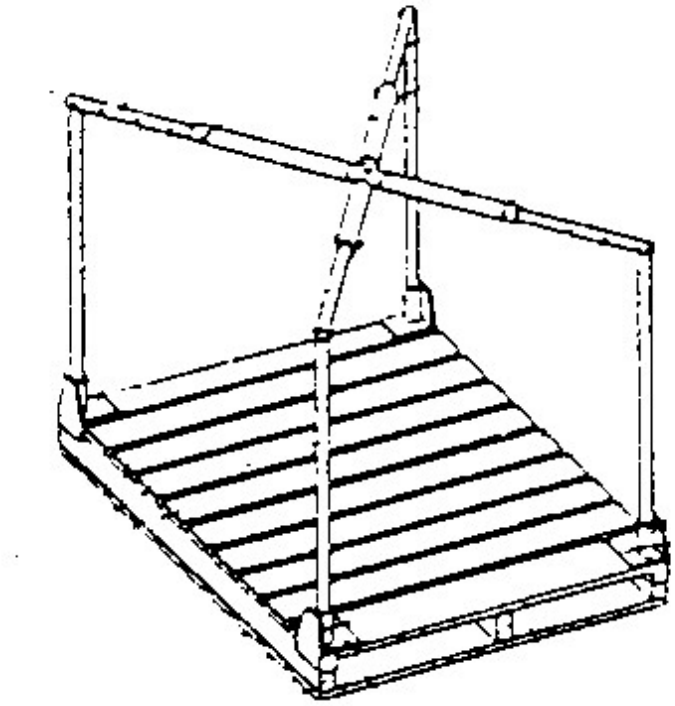

References relevant to classification in this group

This subclass/group does not cover:

Stabilising columns for palletisable loads	**L65D71/00P8B**

Informative references

Attention is drawn to the following places, which may be of interest for search:

Rigid pallets with side walls and with bodies formed by uniting or interconnecting two or more components	B65D 19/06
Rigid pallets with side walls and with bodies formed by uniting or interconnecting two or more components, made wholly or mainly of metal	B65D 19/08
Rigid pallets with side walls, with bodies formed by uniting or interconnecting two or more components, of skeleton construction, made wholly or mainly of metal	B65D 19/10

Rigid, collapsible pallets with side walls and with bodies formed by uniting or interconnecting two or more components, made wholly or mainly of metal	B65D 19/12
Elements or devices for locating articles on platforms	B65D 19/44
Containers with stacking feet or corner elements	B65D 21/0215

B65D 19/40

Elements for spacing platforms from supporting surface

Definition statement

This subclass/group covers:

Illustrative example of subject matter classified in this group:

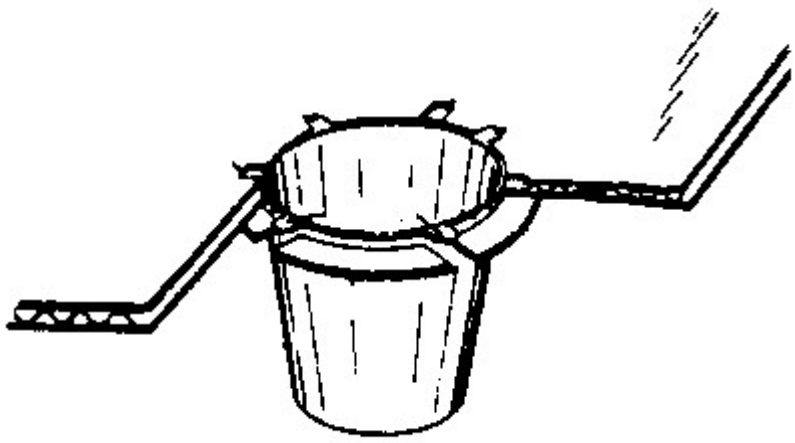

References relevant to classification in this group

This subclass/group does not cover:

Isolated supports for palletisable loads (isolated feet)	B65D 71/0088
Isolated supports for palletisable loads (isolated skids)	B65D 71/0092

Informative references

Attention is drawn to the following places, which may be of interest for search:

External fittings for spacing bases of containers from supporting surfaces	B65D 25/24
Load supporting elements (Not used)	B65D 2571/0008
Palletisable loads, local maintaining elements, stabilising and reinforcing columns	B65D 2571/00074

Special rules of classification within this group

The use of available Indexing Codes is mandatory.

B65D 19/42

Arrangements or applications of rollers or wheels

Definition statement

This subclass/group covers:

Illustrative example of subject matter classified in this group:

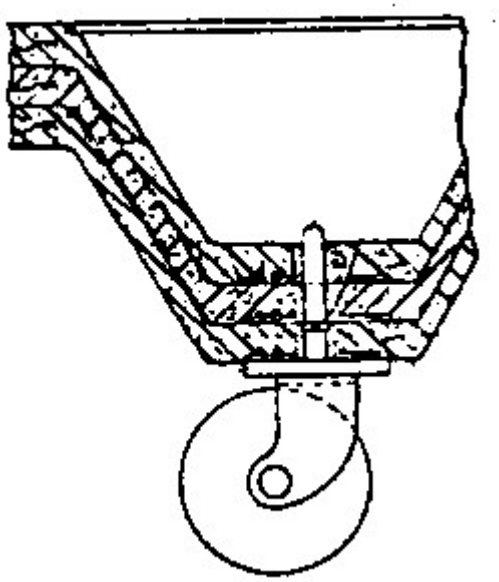

Informative references

Attention is drawn to the following places, which may be of interest for search:

Hand carts having more than one axis carrying transport wheels, characterised by a rectangular shape, involving side walls or racks	B62B 3/002

Special rules of classification within this group

The use of available Indexing Codes is mandatory.

B65D 19/44

Elements or devices for locating articles on platforms

Definition statement

This subclass/group covers:

Illustrative example of subject matter classified in this group:

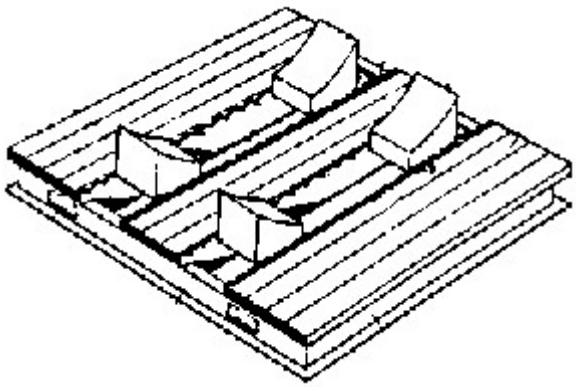

References relevant to classification in this group

This subclass/group does not cover:

Anti-slip or anti-skid elements	B65D 19/38
Anti-slip or anti-skid bags	B65D 33/005

Special rules of classification within this group

The use of available Indexing Codes is mandatory.

B65D 21/00

Nestable, stackable, or joinable containers; Containers of variable capacity (large containers B65D 88/00; [N: containers for display purposes A47B 87/0276])

Informative references

Attention is drawn to the following places, which may be of interest for search:

Multi-unit containers or multi-compartmented containers	B65D 88/1643

B65D 21/02

Containers specially shaped, or provided with fittings or attachments, to facilitate nesting, stacking, or joining together [N: (stackable containers of polygonal cross-section formed by folding or erecting blanks made of paper B65D 5/001)]

References relevant to classification in this group

This subclass/group does not cover:

Drinking vessels or saucers used for table service of stackable type	A47G 19/23

B65D 21/0201

[N: stackable or joined together side-by-side]

Relationship between large subject matter areas

Containers, also provided with means of different kind for stacking them one upon the other, are also classified in other B65D 21/02 groups.

Informative references

Attention is drawn to the following places, which may be of interest for search:

Articles joined together for convenience of storage or transport without the use of packaging elements	B65D 69/00
Cylindrical or polygonal containers	B65D 81/3283

Modular elements with complementary shapes, interengageable parts or the like	B65D 81/361

B65D 21/0202

[N: and loosely interengaged by integral complementary shapes]

Definition statement

This subclass/group covers:

Illustrative example of subject matter classified in this group:

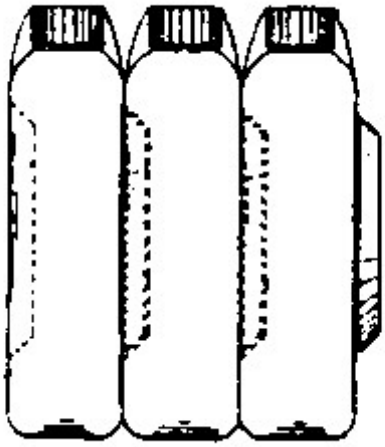

B65D 21/0204

[N: and joined together by interconnecting formations forming part of the container, e.g. dove-tail, snap connections, hook elements]

Definition statement

This subclass/group covers:

Illustrative example of subject matter classified in this group:

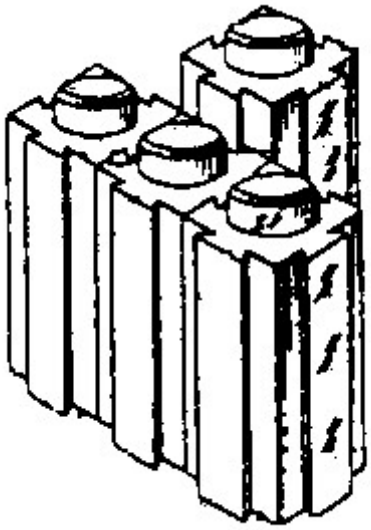

B65D 21/0205

[N: joined together by bonding, adhesive or the like (B65D 21/0208 takes precedence)]

Definition statement

This subclass/group covers:

Illustrative example of subject matter classified in this group:

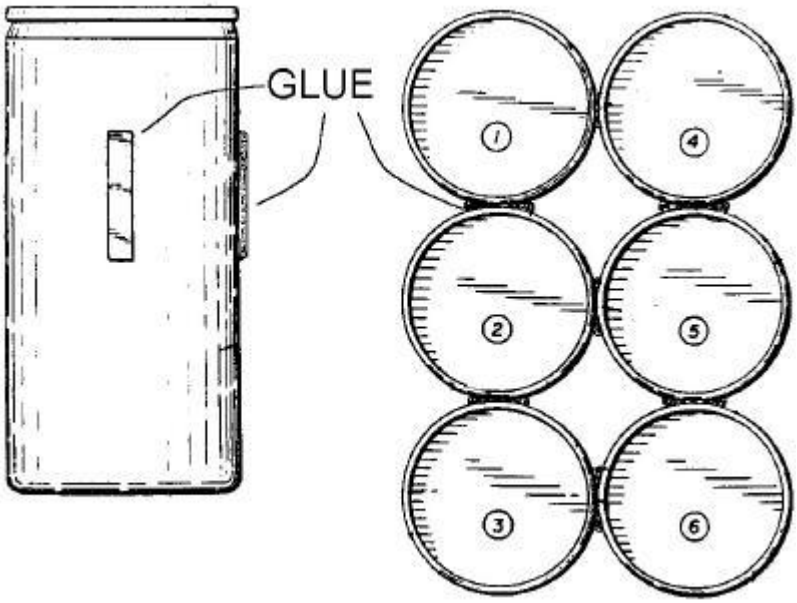

References relevant to classification in this group

This subclass/group does not cover:

Separate rigid or semi-rigid trays or cups joined together by bonding, adhesive, hook and loop-type fastener or the like	B65D 21/0208

B65D 21/0206

[N: Separate rigid or semi-rigid trays or cups joined together, e.g. separate trays connected by single foil closure or crimped together (plurality of trays formed in one piece B65D 1/30)]

Definition statement

This subclass/group covers:

Illustrative example of subject matter classified in this group:

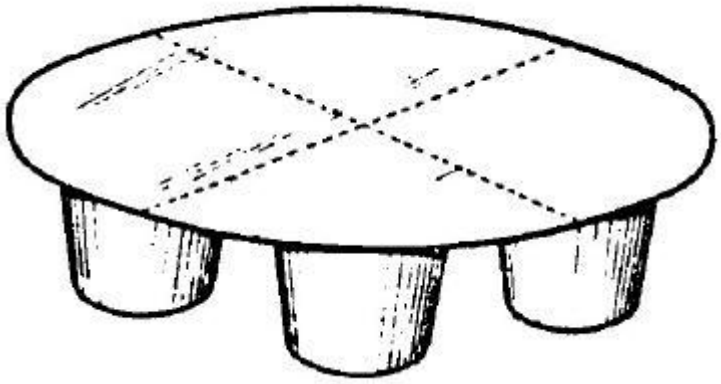

B65D 21/0208

[N: by bonding, adhesive, hook and loop-type fastener or the like]

Definition statement

This subclass/group covers:

Illustrative example of subject matter classified in this group:

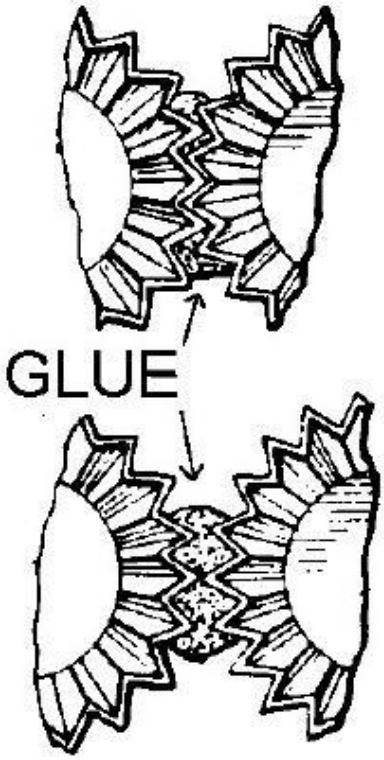

B65D 21/0209

[N: stackable or joined together one-upon-the-other in the upright or upside-down position (B65D 21/0234, B65D 21/0235 take precedence)]

References relevant to classification in this group

This subclass/group does not cover:

Stackable post trays (in and out trays)	B42F 7/12
Nestable or stackable container parts forming a receptacle when one part is inverted upon the other	B65D 21/0234
Containers stackable in a staggered configuration	B65D 21/0235

B65D 21/0211

[N: Wire-mesh containers]

Definition statement

This subclass/group covers:
Illustrative example of subject matter classified in this group:

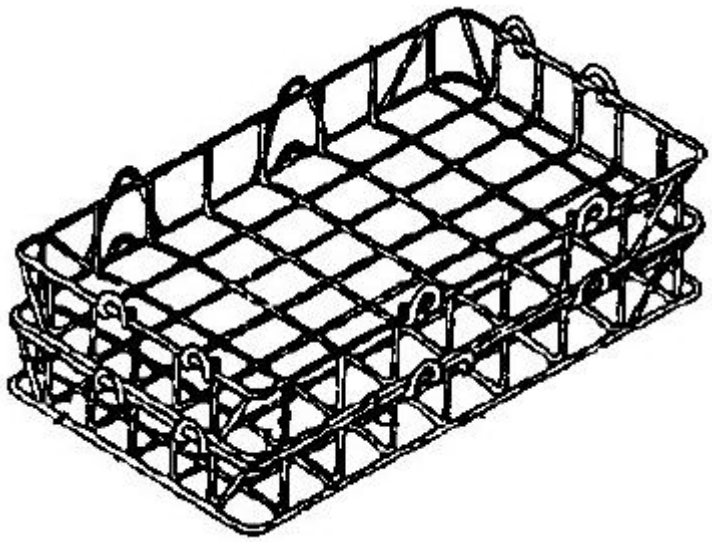

B65D 21/0212

[N: Containers presenting local stacking elements protruding from the upper or lower edge of a side wall, e.g. handles, lugs, ribs, grooves (B65D 21/0211, B65D 21/0215, B65D 21/023 take precedence)]

Definition statement

This subclass/group covers:
Illustrative example of subject matter classified in this group:

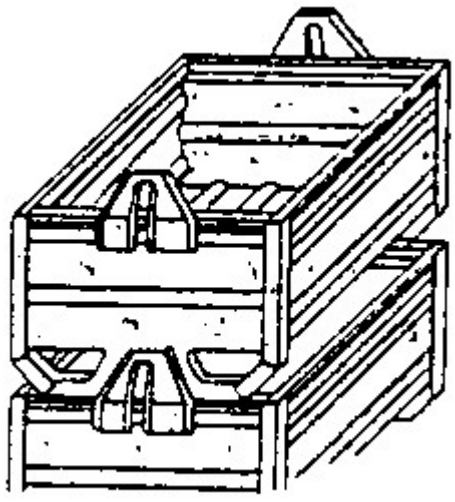

References relevant to classification in this group

This subclass/group does not cover:

Wire-mesh containers	B65D 21/0211
Containers with stacking feet or corner elements	B65D 21/0215
Closed containers provided with local cooperating elements in the top and bottom surfaces	B65D 21/023
Stackable trays with means for draining away liquids escaping from, or exuded by, the contents	B65D 81/26

B65D 21/0213

[N: Containers presenting a continuous stacking profile along the upper or lower edge of at least two opposite side walls]

Definition statement

This subclass/group covers:

Illustrative example of subject matter classified in this group:

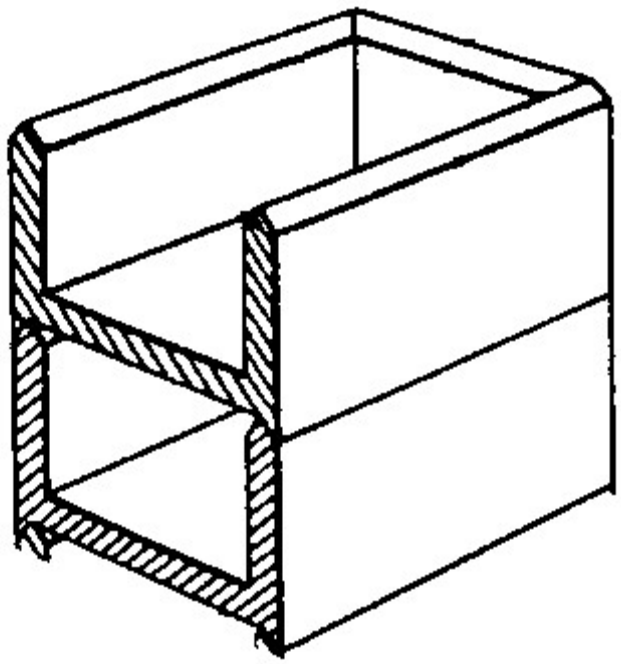

References relevant to classification in this group

This subclass/group does not cover:

Stackable trays with means for draining away liquids escaping from, or exuded by, the contents	B65D 81/26

B65D 21/0215

[N: Containers with stacking feet or corner elements (B65D 21/0211, B65D 21/023 take precedence)]

Definition statement

This subclass/group covers:

Illustrative example of subject matter classified in this group:

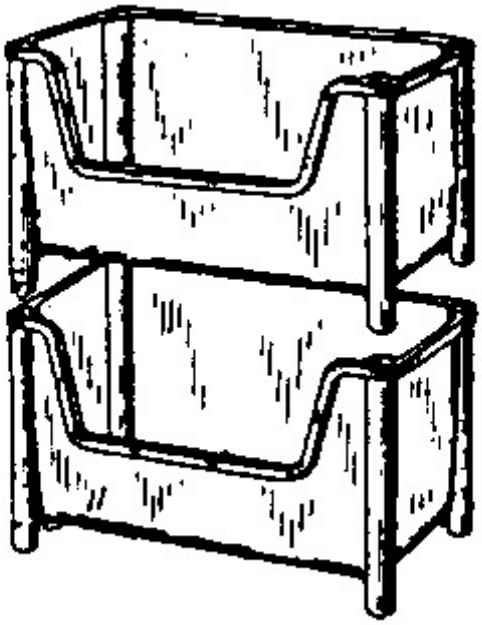

References relevant to classification in this group

This subclass/group does not cover:

Wire-mesh containers	B65D 21/0211
Closed containers provided with local cooperating elements in the top and bottom surfaces	B65D 21/023
Stackable containers provided with	B65D 81/26

means for draining away liquids escaping from, or exuded by, the contents	

Informative references

Attention is drawn to the following places, which may be of interest for search:

Details of accessories	B65D 19/385

B65D 21/0216

[N: Containers with stacking ribs in the side walls]

Definition statement

This subclass/group covers:

Illustrative example of subject matter classified in this group:

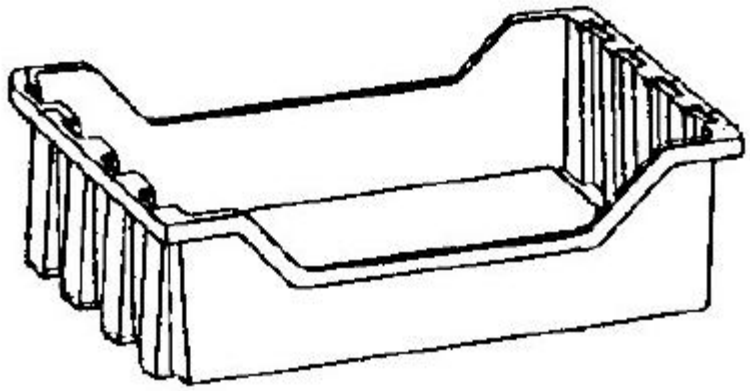

B65D 21/0217

[N: Containers with a closure presenting stacking elements (B65D 21/064 takes precedence)]

References relevant to classification in this group

This subclass/group does not cover:

Movable parts adapted to be placed in alternative positions for nesting the containers when empty and for stacking them when full, the movable parts being an attached or integral	B65D 21/064

cover made of one or two pieces	

B65D 21/0219

[N: the closure presenting projecting peripheral elements receiving or surrounding the bottom or peripheral elements projecting from the bottom of a superimposed container (B65D 21/0222 and B65D 21/0223 take precedence)]

Definition statement

This subclass/group covers:

Illustrative example of subject matter classified in this group:

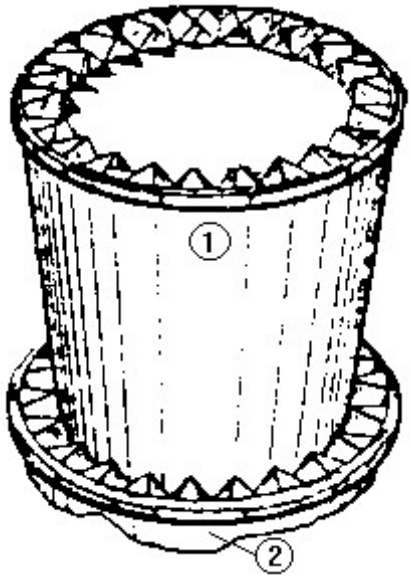

References relevant to classification in this group

This subclass/group does not cover:

Containers with a closure presenting stacking elements the closure and the bottom presenting co-operating peripheral ribs and grooves	B65D 21/0222
Containers with a closure presenting stacking elements the closure and the bottom presenting local co-operating elements	B65D 21/0223

B65D 21/022

[N: the bottom presenting projecting peripheral elements receiving or surrounding the closure or peripheral elements projecting therefrom (B65D 21/0222 and B65D 21/0223 take precedence)]

Definition statement

This subclass/group covers:

Illustrative example of subject matter classified in this group:

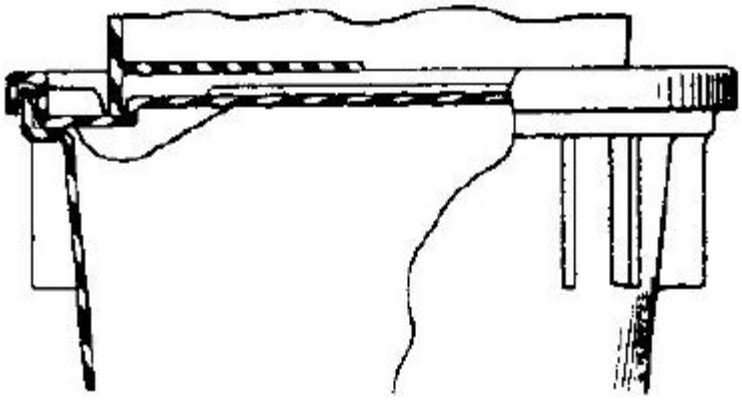

References relevant to classification in this group

This subclass/group does not cover:

Containers with a closure presenting stacking elements the closure and the bottom presenting co-operating peripheral ribs and grooves	B65D 21/0222
Containers with a closure presenting stacking elements the closure and the bottom presenting local co-operating elements	B65D 21/0223

B65D 21/0222

[N: the closure and the bottom presenting co-operating peripheral ribs and grooves]

Definition statement

This subclass/group covers:

Illustrative example of subject matter classified in this group:

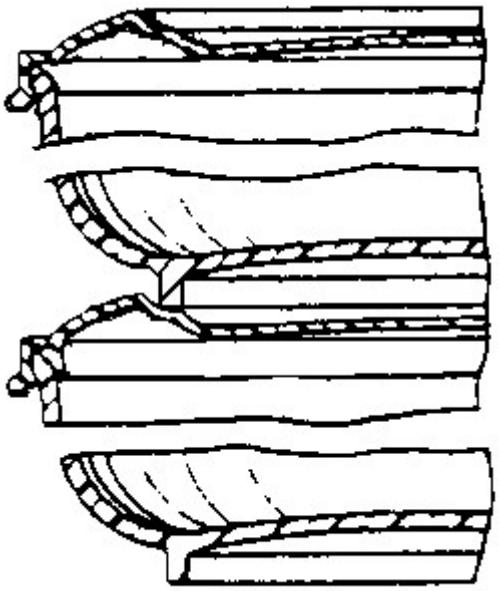

B65D 21/0223

[N: the closure and the bottom presenting local co-operating elements, e.g. projections and recesses (B65D 21/0222 takes precedence)]

Definition statement

This subclass/group covers:

Illustrative example of subject matter classified in this group:

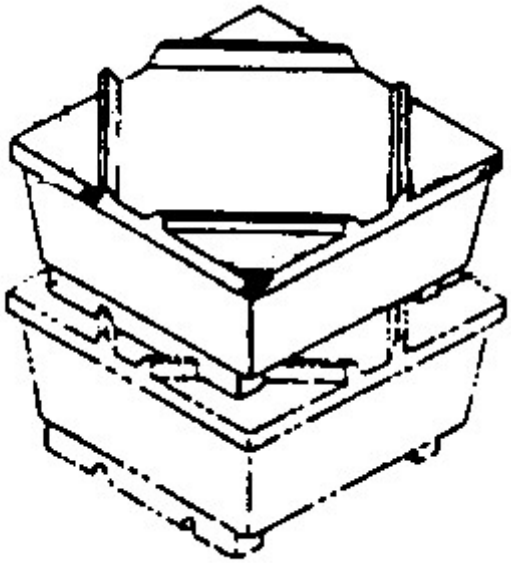

References relevant to classification in this group

This subclass/group does not cover:

Containers with a closure presenting stacking elements the closure and the bottom presenting co-operating peripheral ribs and grooves	B65D 21/0222

B65D 21/0224

[N: Auxiliary removable stacking elements other than covers]

Definition statement

This subclass/group covers:

Illustrative example of subject matter classified in this group:

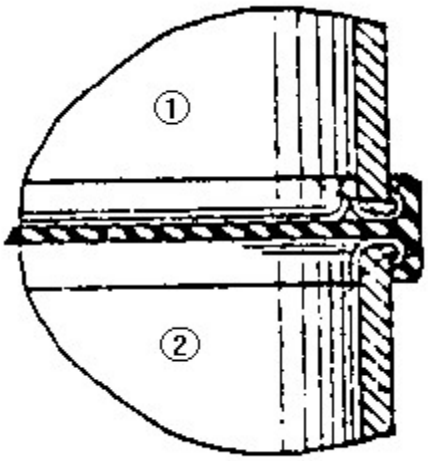

References relevant to classification in this group

This subclass/group does not cover:

Auxiliary removable stacking elements in combination with the possibility for stacking containers side-by-side are also classified in	B65D 21/0201

Informative references

Attention is drawn to the following places, which may be of interest for search:

Internal frames or supports for flexible articles	B65D 57/00
A plurality of articles held together only partially by packaging elements formed otherwise than by folding a blank, coaxial connections.	B65D 71/502
Separate rigid or semi-rigid containers joined to each other at their external surfaces	B65D 81/3205

B65D 21/0226

[N: Containers with movable parts adapted to be placed in alternative positions for stacking the containers at different levels, i.e. without nesting of the containers (with means for nesting B65D 21/06)]

Definition statement

This subclass/group covers:

Illustrative examples of subject matter classified in this group:

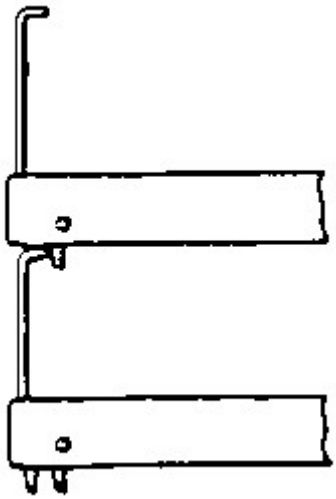

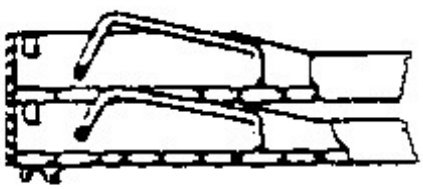

Informative references

Attention is drawn to the following places, which may be of interest for search:

Movable parts adapted to be placed in alternative positions for nesting the containers when empty and for stacking them when full, the movable parts being attached or integral and displaceable into a position overlying the top of the container	B65D 21/062

B65D 21/0227

[N: Containers joined together by bonding, adhesive or the like]

Definition statement

This subclass/group covers:

Illustrative example of subject matter classified in this group:

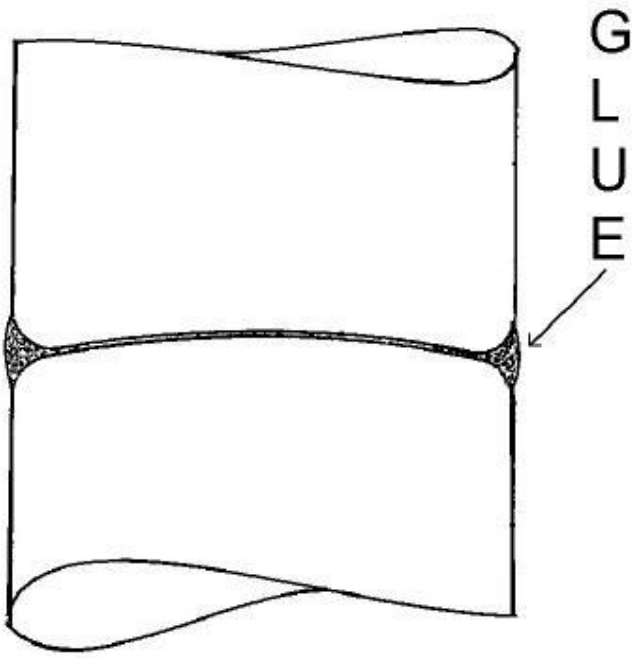

B65D 21/0228

[N: Containers joined together by screw-, bayonet-, snap-fit or

the like, (B65D 21/0211, B65D 21/0231 take precedence)]

Definition statement

This subclass/group covers:

Illustrative example of subject matter classified in this group:

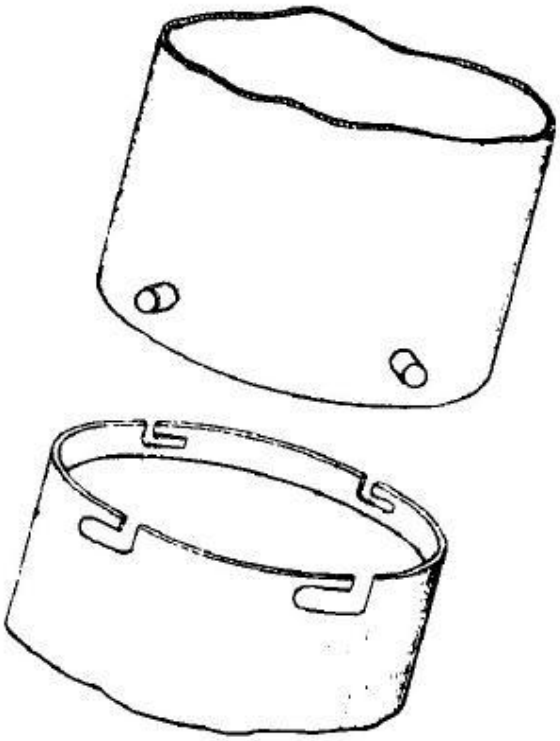

References relevant to classification in this group

This subclass/group does not cover:

Wire-mesh containers	B65D 21/0211
Bottles, canisters or jars whereby the neck or handle project into a cooperating cavity in the bottom	B65D 21/0231

B65D 21/023

[N: Closed containers provided with local cooperating elements in the top and bottom surfaces, e.g. projection and recess (B65D 21/0223 takes precedence)]

Definition statement

This subclass/group covers:

Illustrative example of subject matter classified in this group:

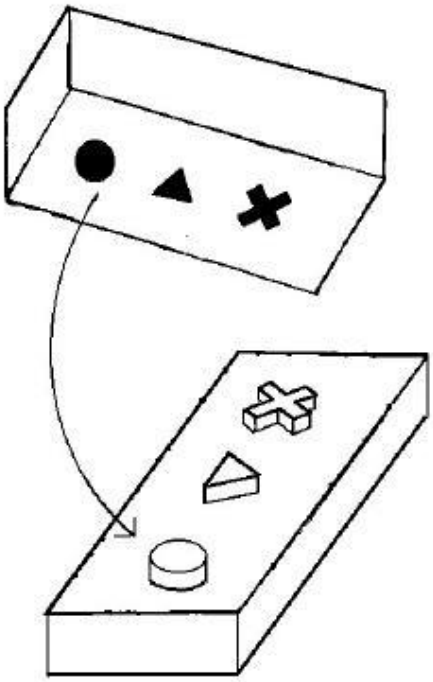

References relevant to classification in this group

This subclass/group does not cover:

Containers with a closure presenting stacking elements, the closure and the bottom presenting local co-operating elements	B65D 21/0223

B65D 21/0231

[N: Bottles, canisters or jars whereby the neck or handle project into a cooperating cavity in the bottom (B65D 81/361 takes precedence)]

Definition statement

This subclass/group covers:

Illustrative example of subject matter classified in this group:

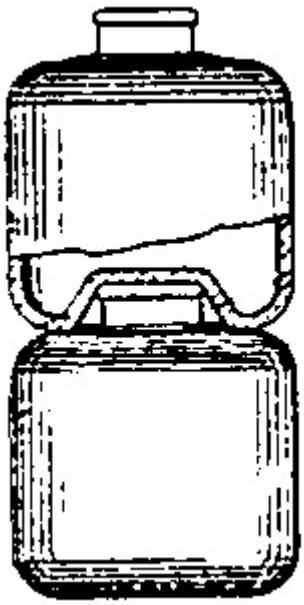

References relevant to classification in this group

This subclass/group does not cover:

Modular elements with complementary shapes, interengageable parts or the like	B65D 81/361

B65D 21/0233

[N: Nestable containers]

Definition statement

This subclass/group covers:

Illustrative example of subject matter classified in this group:

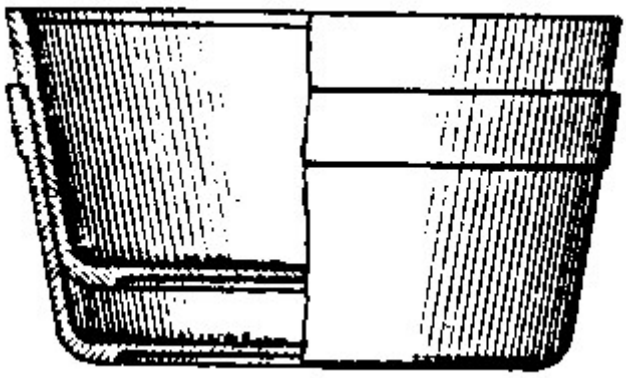

References relevant to classification in this group

This subclass/group does not cover:

Nestable cups made of one piece	B65D 1/265
Nested by turning over every other container	B65D 21/0234

B65D 21/0234

[N: Nestable or stackable container parts forming a receptacle when one part is inverted upon the other]

Definition statement

This subclass/group covers:

Illustrative example of subject matter classified in this group:

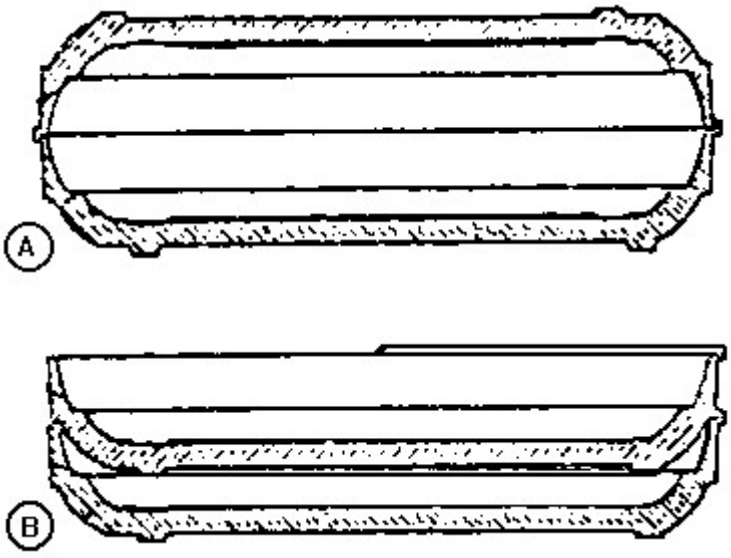

B65D 21/0235

[N: Containers stackable in a staggered configuration]

Definition statement

This subclass/group covers:

Illustrative example of subject matter classified in this group:

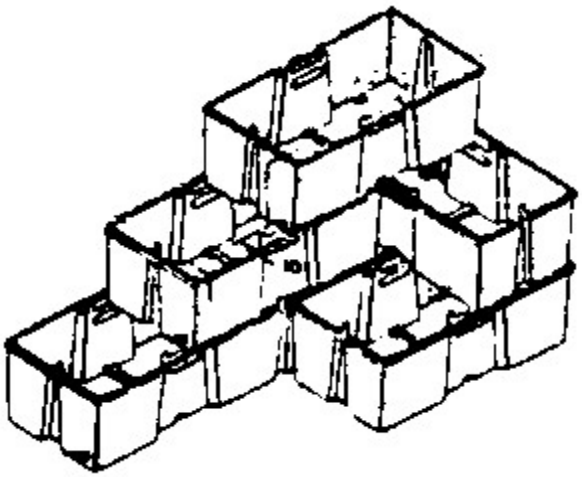

Informative references

Attention is drawn to the following places, which may be of interest for search:

Identical stackable containers specially adapted for nesting after rotation around a vertical axis about 90	B65D 21/046

B65D 21/0237

[N: Rigid or semi-rigid containers provided with a recess on their external surface for accommodating a smaller container]

Definition statement

This subclass/group covers:

Illustrative example of subject matter classified in this group:

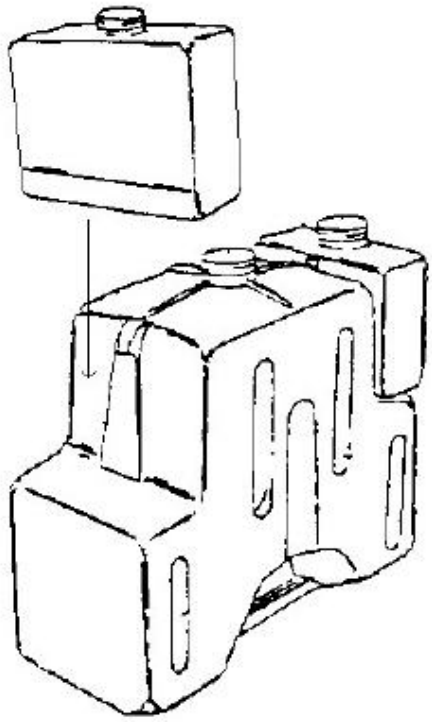

Informative references

Attention is drawn to the following places, which may be of interest for search:

Means for the attachment of tags	B65D 23/14

B65D 21/0238

[N: Rigid or semi-rigid containers provided with a recess in order to be seated on the neck or similar protrusion of a larger container]

Definition statement

This subclass/group covers:

Illustrative example of subject matter classified in this group:

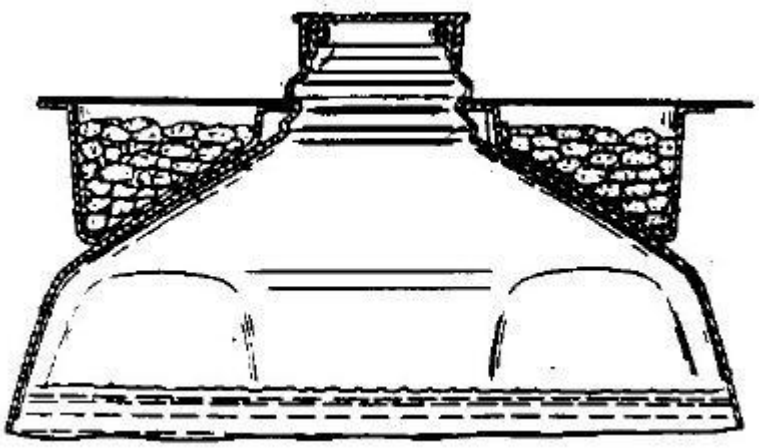

Informative references

Attention is drawn to the following places, which may be of interest for search:

Means for the attachment of tags	B65D 23/14

B65D 21/04

Open-ended containers shaped to be nested when empty and to be superposed when full

References relevant to classification in this group

This subclass/group does not cover:

Nested by turning over every other container	B65D 21/0234

B65D 21/041

[N: Identical multi-level containers, i.e. having at least three levels]

Definition statement

This subclass/group covers:

Illustrative example of subject matter classified in this group:

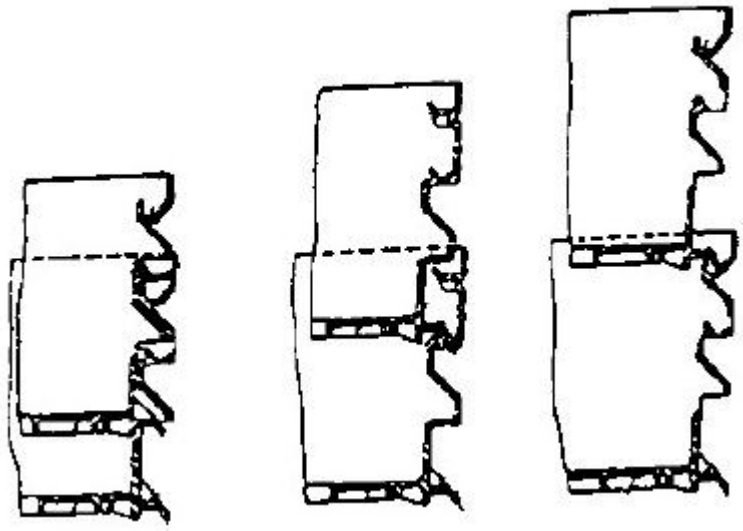

References relevant to classification in this group

This subclass/group does not cover:

If all the levels are obtained by the same movable parts	B65D 21/062

B65D 21/043

[N: Identical stackable containers specially adapted for nesting after rotation around a vertical axis (B65D 21/041 takes precedence)]

References relevant to classification in this group

This subclass/group does not cover:

Identical multi-level containers	B65D 21/041

B65D 21/045

[N: about 180° only]

Definition statement

This subclass/group covers:

Illustrative example of subject matter classified in this group:

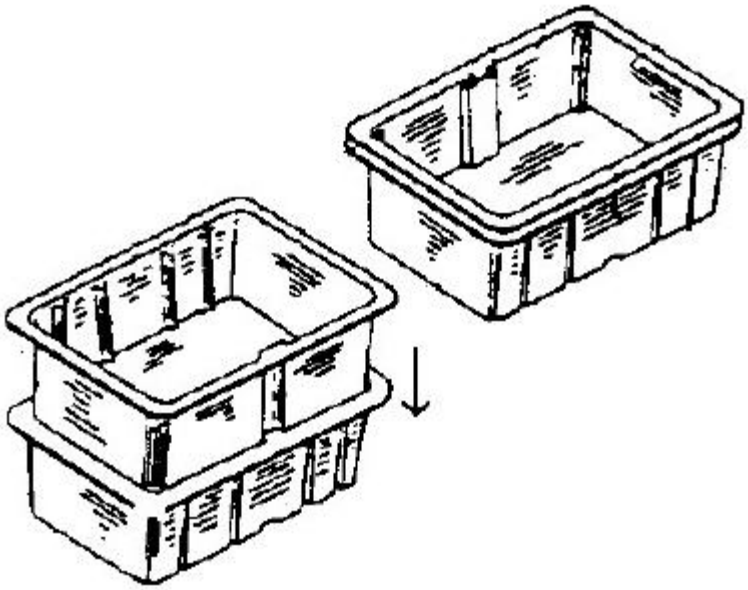

B65D 21/046

[N: about 90° (staggered configuration B65D 21/0235)]

Definition statement

This subclass/group covers:
Illustrative example of subject matter classified in this group:

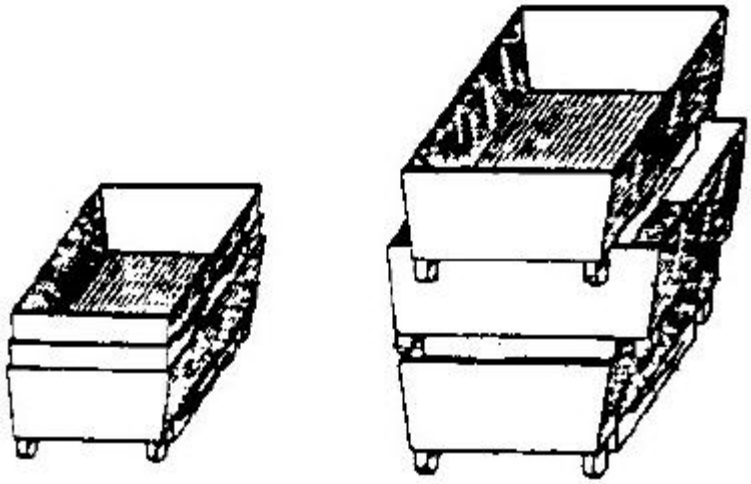

Informative references

Attention is drawn to the following places, which may be of interest for search:

Containers stackable in a staggered configuration	B65D 21/0235

B65D 21/048

[N: Identical stackable containers specially adapted for retaining the same orientation when nested, e.g. the upper container being fixed or slightly rotatable during the nesting operation (B65D 21/041 takes precedence)]

Definition statement

This subclass/group covers:

Illustrative example of subject matter classified in this group:

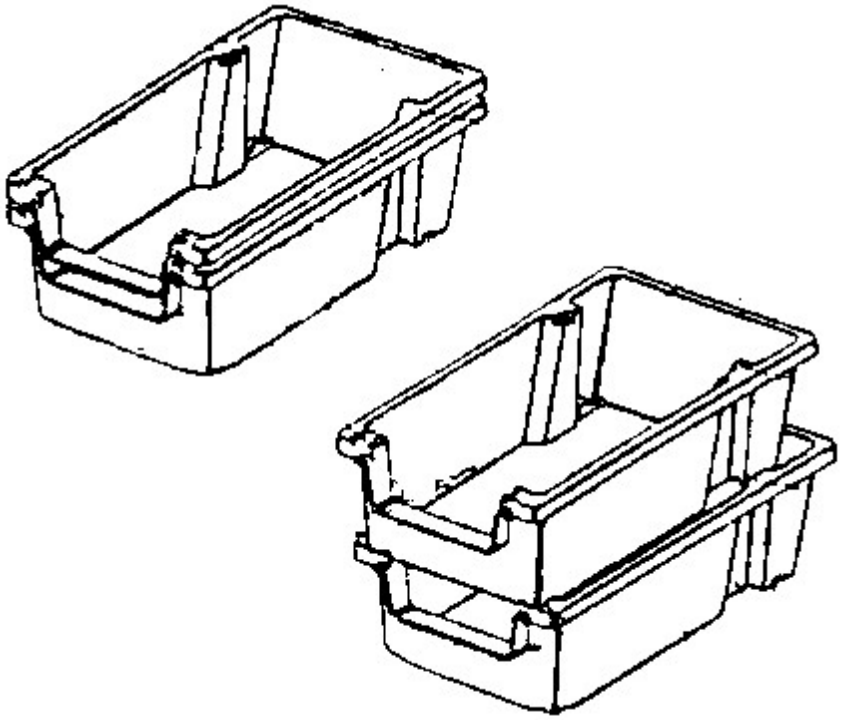

References relevant to classification in this group

This subclass/group does not cover:

Identical multi-level containers	B65D 21/041

B65D 21/062

[N: the movable parts being attached or integral and displaceable into a position overlying the top of the container,

e.g. bails, corner plates (covers B65D 21/064)]

Definition statement

This subclass/group covers:
Illustrative example of subject matter classified in this group:

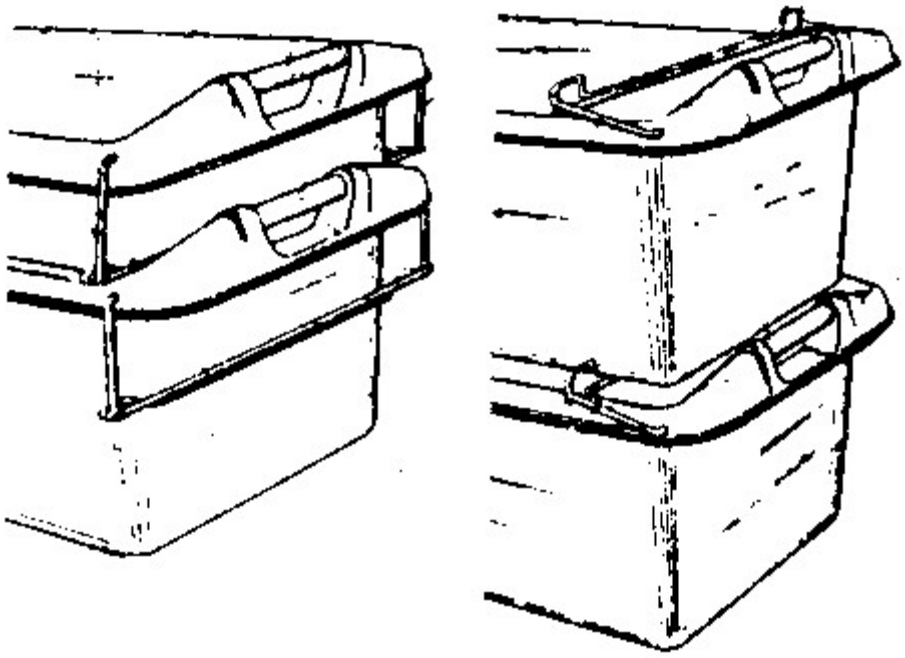

Informative references

Attention is drawn to the following places, which may be of interest for search:

Containers with movable parts adapted to be placed in alternative positions for stacking the containers at different levels (containers not nesting)	B65D 21/0226

B65D 21/064

[N: the movable parts being an attached or integral cover made of one or two pieces]

Definition statement

This subclass/group covers:
Illustrative example of subject matter classified in this group:

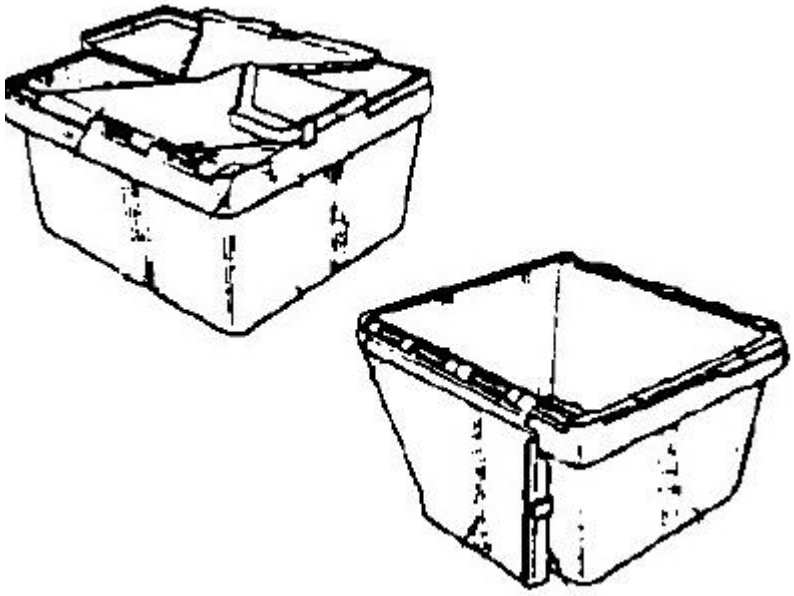

B65D 21/066

[N: the movable parts being supports or feet, e.g. retractable feet, pivotable supports]

Definition statement

This subclass/group covers:
Illustrative example of subject matter classified in this group:

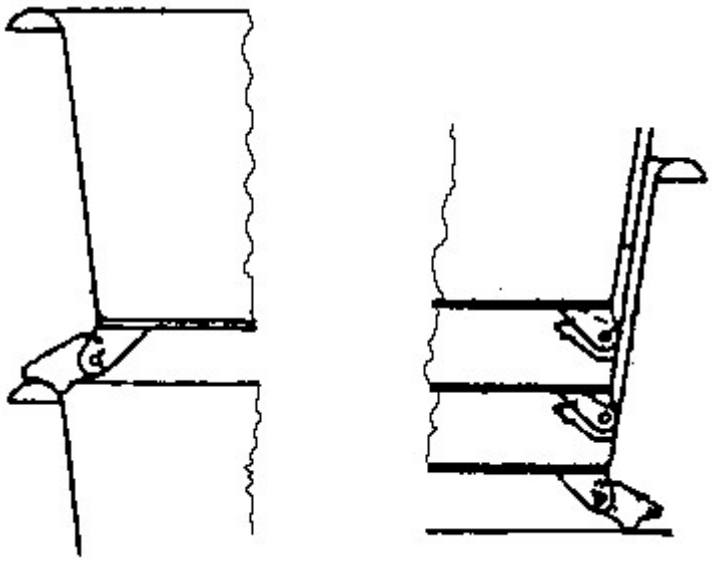

B65D 21/068

[N: the movable parts consisting of walls or parts thereof, i.e.

deformable containers]

Definition statement

This subclass/group covers:

Illustrative example of subject matter classified in this group:

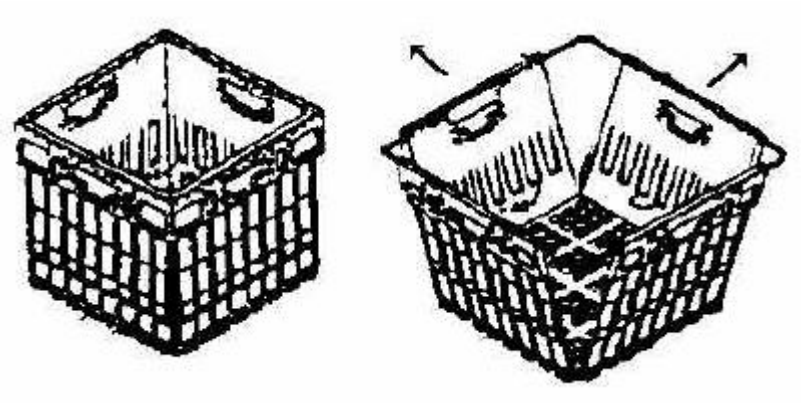

B65D 21/08

Containers of variable capacity (containers of polygonal cross-section adapted to be of variable capacity formed by folding or erecting blanks made of paper [N: B65D 5/0005])

References relevant to classification in this group

This subclass/group does not cover:

Foldable bottles	B65D 1/0292
Bottles made of several parts with variable capacity	B65D 11/04
Containers with breakable or removable sections to adapt to the remaining contents	B65D 83/0005

Informative references

Attention is drawn to the following places, which may be of interest for search:

Containers adapted to be temporarily deformed by external pressure to expel contents	B65D 1/32
Containers having bodies formed by interconnecting or uniting two or more	B65D 9/28

rigid, or substantially rigid, components made wholly or mainly of wood or substitutes therefor, with double end walls and bottoms movable under influence of contents	

B65D 21/083

[N: by means of additional elements, e.g. modular]

Definition statement

This subclass/group covers:

Illustrative example of subject matter classified in this group:

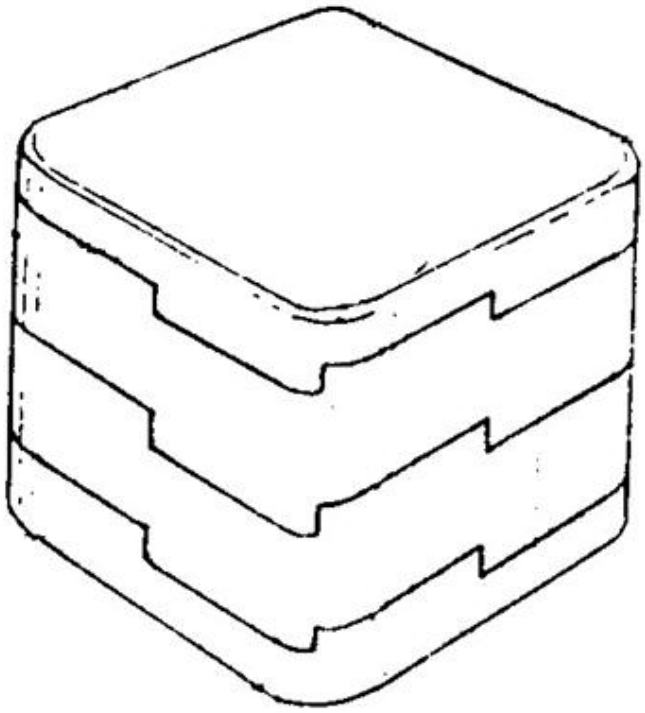

Informative references

Attention is drawn to the following places, which may be of interest for search:

Collapsible containers, with detachable components where all walls are detached from each other to collapse the container	B65D 11/1873

B65D 21/086

[N: Collapsible or telescopic containers (B65D 1/0292 and B65D 21/068 take precedence)]

Definition statement

This subclass/group covers:

Illustrative example of subject matter classified in this group:

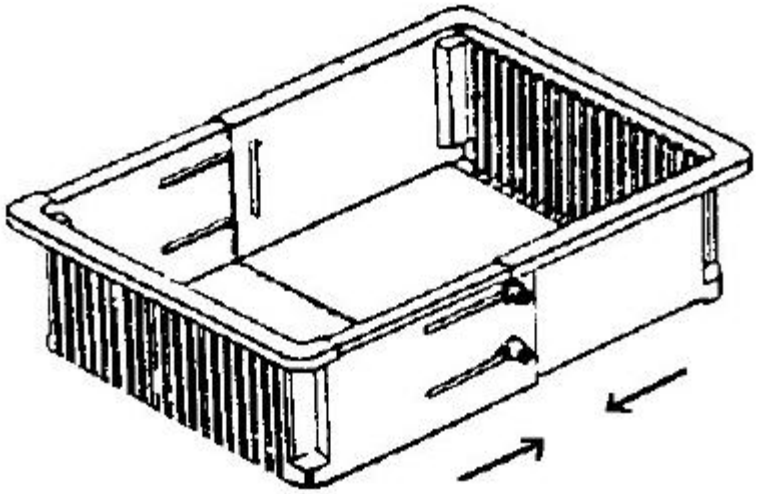

References relevant to classification in this group

This subclass/group does not cover:

Foldable bottles	B65D 1/0292
Nestable, stackable, or joinable containers with movable parts where the movable parts consist of walls or parts thereof	B65D 21/068

B65D 23/00

Details of bottles or jars not otherwise provided for (closure-securing elements B65D 45/00)

References relevant to classification in this group

This subclass/group does not cover:

Bottles for medical use	A61J 1/00

Nets for bottles	B65D 29/04
Coaxial connectors, e.g. for transferring the contents from one bottle to another,	B65D 71/502
Protecting rings see also	B65D 85/307
Containers made of glass see also	C03C

B65D 23/001

[N: Supporting means fixed to the container]

Definition statement

This subclass/group covers:
Illustrative example of subject matter classified in this group:

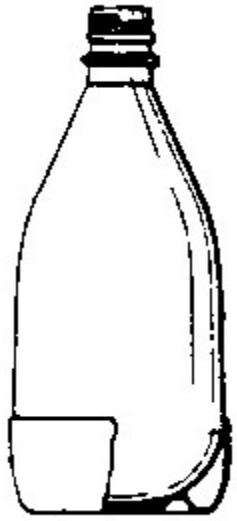

B65D 23/003

[N: Suspension means]

Definition statement

This subclass/group covers:
Illustrative example of subject matter classified in this group:



References relevant to classification in this group

This subclass/group does not cover:

Suspending devices connected to the closure	B65D 51/242

Informative references

Attention is drawn to the following places, which may be of interest for search:

Holders or handles for hanging up infusion containers	A61M 5/1417

B65D 23/005

[N: in the form of a label hanger]

Definition statement

This subclass/group covers:

Illustrative example of subject matter classified in this group:

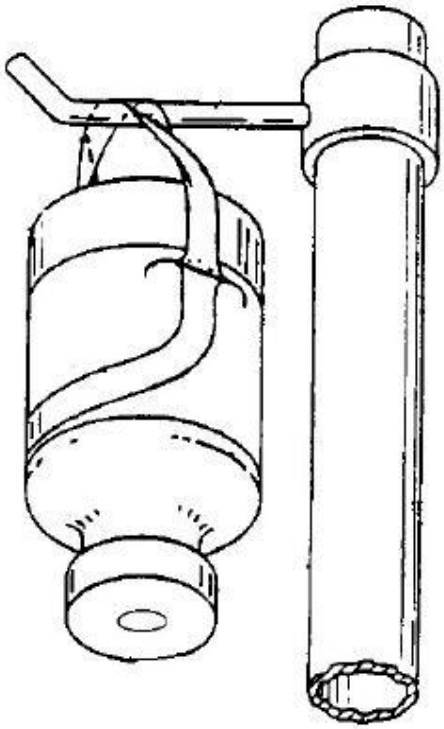

B65D 23/006

[N: Means for indicating refilling of the container]

Definition statement

This subclass/group covers:
Illustrative example of subject matter classified in this group:

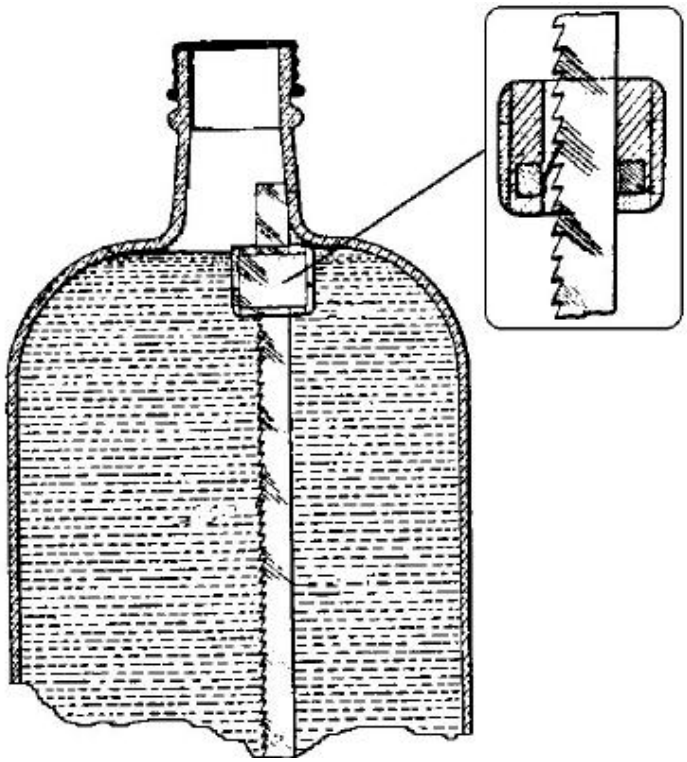

B65D 23/008

[N: by means of a label, e.g. tearable, light sensitive]

Definition statement

This subclass/group covers:
Illustrative example of subject matter classified in this group:



B65D 23/02

Linings or internal coatings

Definition statement

This subclass/group covers:
Illustrative example of subject matter classified in this group:

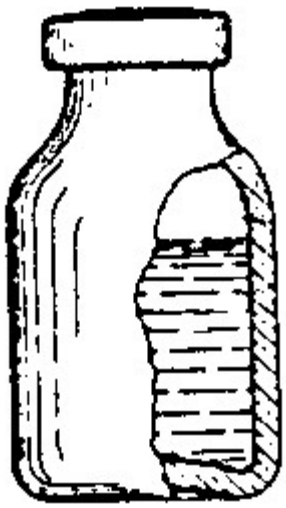

Informative references

Attention is drawn to the following places, which may be of interest for search:

Bottles or similar containers with necks or like restricted apertures, designed for pouring contents, characterised by material and multilayered	B65D 1/0215
Linings or internal coatings	B65D 25/14

B65D 23/04

Means for mixing or for promoting flow of contents (hydro-dynamic means for influencing the flow of liquids F15D)

Definition statement

This subclass/group covers:

Illustrative example of subject matter classified in this group:

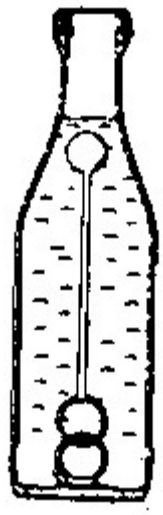

References relevant to classification in this group

This subclass/group does not cover:

Stirring devices	B01F 13/00

Informative references

Attention is drawn to the following places, which may be of interest for search:

Attention is drawn tot he following places, which may be of interest for search:

Hydrodynamic means for influencing the flow of liquids	F15D 1/00

B65D 23/06

Integral drip catchers or drip-preventing means

Definition statement

This subclass/group covers:

Illustrative example of subject matter classified in this group:

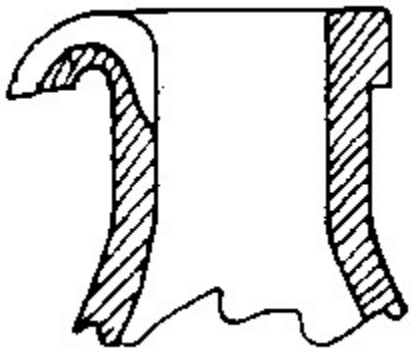

Informative references

Attention is drawn to the following places, which may be of interest for search:

Closures with filling and discharging, or with discharging, devices with drip catchers or drip-preventing means	B65D 47/40

B65D 23/065

[N: Loose or loosely-attached drip catchers or drip preventing means]

Definition statement

This subclass/group covers:

Illustrative example of subject matter classified in this group:

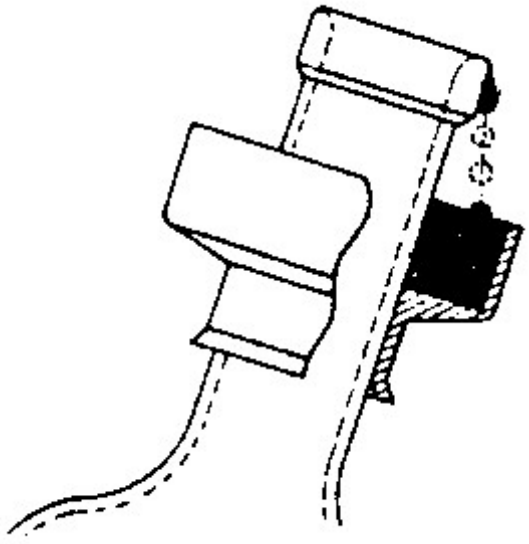

Informative references

Attention is drawn to the following places, which may be of interest for search:

Closures with filling and discharging, or with discharging, devices with drip catchers or drip-preventing means	B65D 47/40

B65D 23/08

Coverings or external coatings (wrappers B65D 65/00)

References relevant to classification in this group

This subclass/group does not cover:

Protecting nets	B65D 29/04
Wrappers with shock-absorbing properties	B65D 81/03

Informative references

Attention is drawn to the following places, which may be of interest for search:

Wrappers	B65D 65/00

B65D 23/0807

[N: Coatings]

Definition statement

This subclass/group covers:
Illustrative example of subject matter classified in this group:

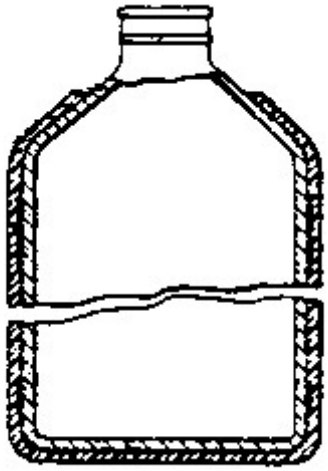

B65D 23/0821

[N: consisting mainly of polymeric materials (B65D 23/0828 takes precedence)]

References relevant to classification in this group

This subclass/group does not cover:

Coatings consisting mainly of paints or lacquers	B65D 23/0828

B65D 23/085

[N: and glued or otherwise sealed to the bottle (B65D 23/0857, B65D 23/0864, B65D 23/0871 take precedence)]

Definition statement

This subclass/group covers:
Illustrative example of subject matter classified in this group:

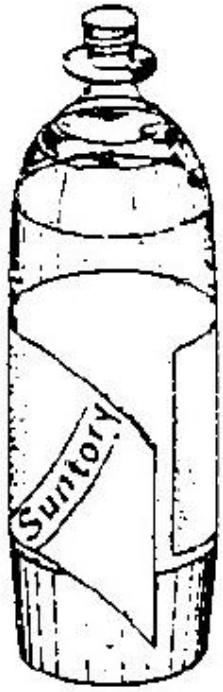

References relevant to classification in this group

This subclass/group does not cover:

Sheets or tubes applied around the bottle and locked to the bottle by mechanical means	B65D 23/0857
Sheets or tubes applied around the bottle, applied in mould	B65D 23/0864
Sheets or tubes applied around the bottle, stretched over the bottle	B65D 23/0871

B65D 23/0857

[N: and locked to the bottle by mechanical means, e.g. tabs snapping into recesses of the bottle (B65D 23/0871, B65D 23/0878 take precedence)]

Definition statement

This subclass/group covers:

Illustrative example of subject matter classified in this group:

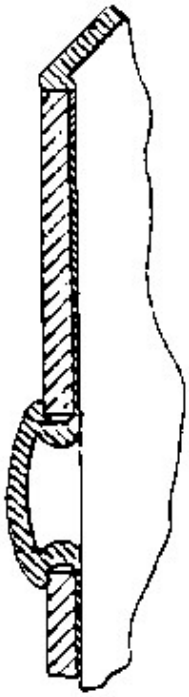

References relevant to classification in this group

This subclass/group does not cover:

Sheets or tubes applied around the bottle, stretched over the bottle	B65D 23/0871
Sheets or tubes applied around the bottle, shrunk on the bottle	B65D 23/0878

B65D 23/0864

[N: Applied in mould]

Definition statement

This subclass/group covers:

Illustrative example of subject matter classified in this group:

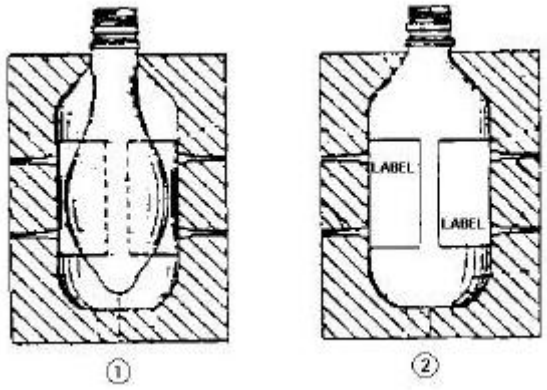

References relevant to classification in this group

This subclass/group does not cover:

Methods or machines for in-mould labelling	B29C 49/2408

B65D 23/0871

[N: Stretched over the bottle (B65D 23/0892 takes precedence)]

References relevant to classification in this group

This subclass/group does not cover:

Net-like covers	B65D 23/0892
For other containers	B65D 25/36
Stretched films as packages	B65D 75/006
Labels to be fastened or secured by the material of the label itself, e.g. by thermo-adhesion	G09F 3/04

B65D 23/0878

[N: Shrunk on the bottle]

Definition statement

This subclass/group covers:

Illustrative example of subject matter classified in this group:

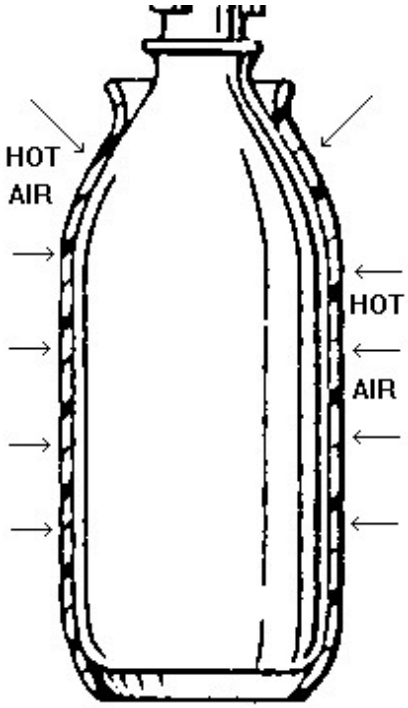

References relevant to classification in this group

This subclass/group does not cover:

For other containers	B65D 25/36
Shrunk films as packages	B65D 75/002
Labels to be fastened or secured by the material of the label itself, e.g. by thermo-adhesion	G09F 3/04

B65D 23/0885

[N: Rigid shells for receiving the bottle or part of it (B65D 23/0842, B65D 81/3876, B65D 85/302 take precedence)]

Definition statement

This subclass/group covers:

Illustrative example of subject matter classified in this group:

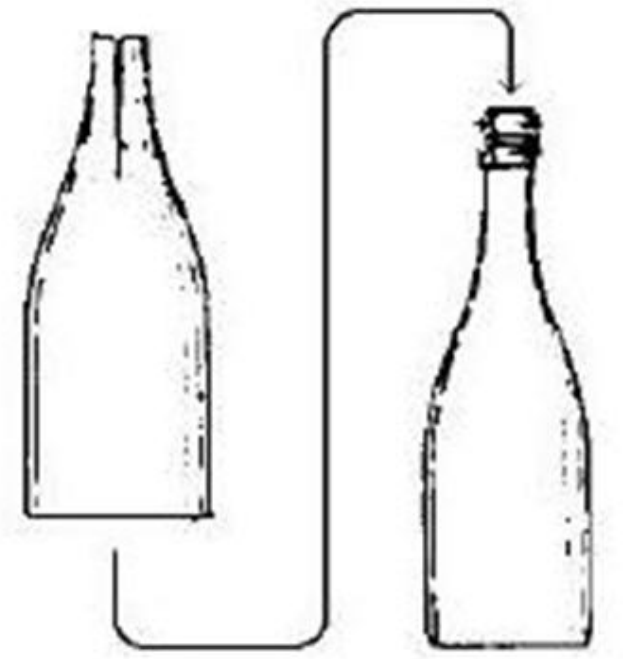

References relevant to classification in this group

This subclass/group does not cover:

Sleeves	B65D 23/0842
Not specially adapted for bottles	B65D 77/04
Insulating sleeves or jackets for cans, bottles, barrels, etc.	B65D 81/3876
For carboys	B65D 85/302

B65D 23/0892

[N: Net-like covers]

Definition statement

This subclass/group covers:

Illustrative example of subject matter classified in this group:



B65D 23/10

Handles

Definition statement

This subclass/group covers:
Illustrative example of subject matter classified in this group:



References relevant to classification in this group

This subclass/group does not cover:

Suspension means	B65D 23/003

B65D 23/102

[N: Gripping means formed in the walls, e.g. roughening, cavities, projections]

Definition statement

This subclass/group covers:

Illustrative example of subject matter classified in this group:



References relevant to classification in this group

This subclass/group does not cover:

For feeding bottles	A61J 9/00
Roughening in a plastic box	B65D 1/40

B65D 23/104

[N: Handles formed separately]

References relevant to classification in this group

This subclass/group does not cover:

Holders for feeding-bottles	A61J 9/06

Informative references

Attention is drawn to the following places, which may be of interest for search:

Handles for carrying purposes	A45F 5/10

B65D 23/106

[N: the gripping region of the handle extending between the neck and the base of the bottle or jar and being located in a radial plane comprising the axis of the bottle or jar]

Definition statement

This subclass/group covers:

Illustrative example of subject matter classified in this group:

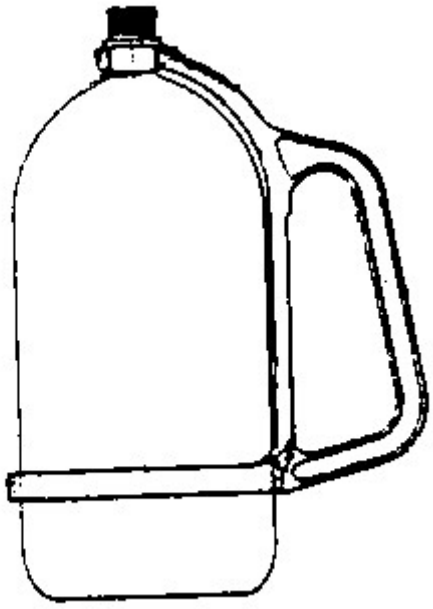

Informative references

Attention is drawn to the following places, which may be of interest for search:

Glass or bottle holders for decanters	A47G 23/0241

B65D 23/108

[N: Bail handles, i.e. pivoted handles of generally semi-circular or loop shape]

Definition statement

This subclass/group covers:

Illustrative example of subject matter classified in this group:

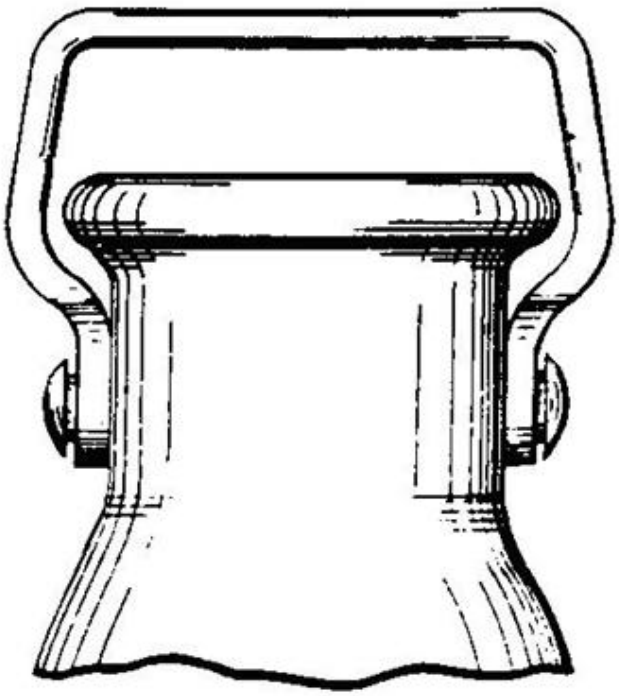

Informative references

Attention is drawn to the following places, which may be of interest for search:

Hand holes, bail handles	B65D 25/32

B65D 23/14

of tags, [N: labels, cards, coupons, decorations or the like (B65D 23/008 takes precedence)]

Definition statement

This subclass/group covers:

Illustrative example of subject matter classified in this group:

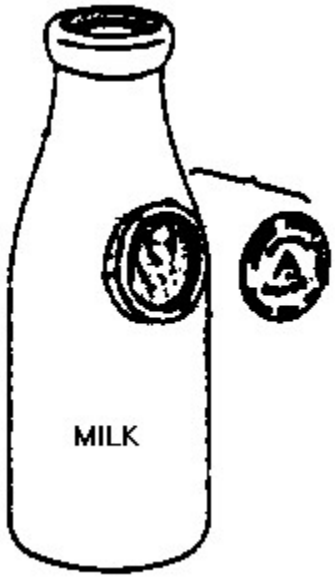

References relevant to classification in this group

This subclass/group does not cover:

Means for indicating refilling of the container by means of a label	B65D 23/008

Informative references

Attention is drawn to the following places, which may be of interest for search:

Information or decoration elements	B65D 5/4212
Means for the attachment of labels, cards, coupons or the like	B65D 25/205
Information or decoration elements	B65D 33/004
Cards, coupons, or other inserts or accessories,the inserts or accessories being located within a	B65D 75/545

pouch or envelope attached to the exterior of the packages	
Labels	B65D 2203/02
Labels for bottles, flasks	G09F 2003/0273

B65D 23/16

of thermometers (feeding bottles with thermometers A61J 9/02)

Definition statement

This subclass/group covers:

Illustrative example of subject matter classified in this group:

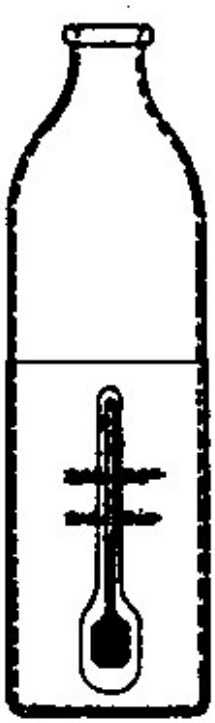

References relevant to classification in this group

This subclass/group does not cover:

Examples of places where the subject matter of this group is covered when specially adapted, used for a particular purpose, or incorporated in a larger system:

Feeding bottles with thermometers	A61J 9/02

B65D 25/00

Details of other kinds or types of rigid or semi-rigid containers

Informative references

Attention is drawn to the following places, which may be of interest for search:

For pallets	B65D 19/38
Of large containers	B65D 90/00

B65D 25/005

[N: Side walls formed with an aperture or a movable portion arranged to allow removal or insertion of contents (B65D 5/16, B65D 7/40 take precedence)]

Definition statement

This subclass/group covers:

Illustrative example of subject matter classified in this group:

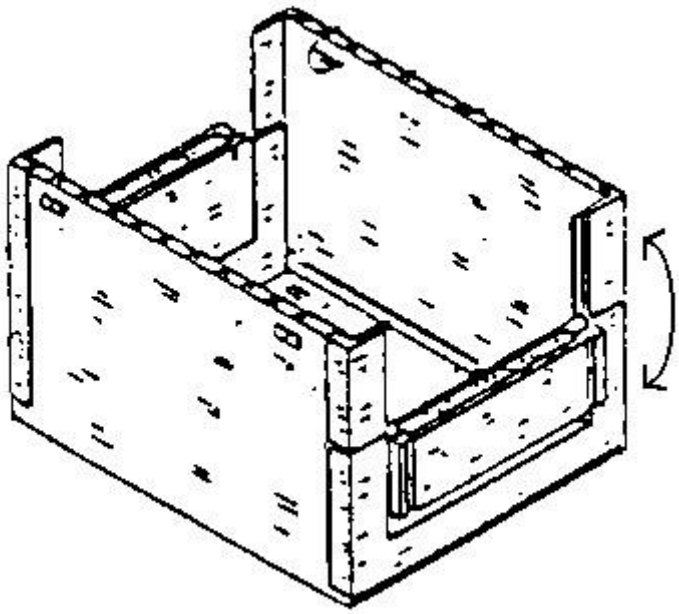

References relevant to classification in this group

This subclass/group does not cover:

Tubular body being formed with an aperture or removable portion arranged to allow removal or insertion of contents through one or more sides	B65D 5/16
Walls formed with filling or emptying apertures	B65D 7/40

Informative references

Attention is drawn to the following places, which may be of interest for search:

Inspection openings or windows	B65D 25/54

B65D 25/02

Internal fittings (of containers made by folding or erecting blanks made of paper B65D 5/44)

References relevant to classification in this group

This subclass/group does not cover:

Of containers made by folding or erecting blanks made of paper	B65D 5/42
Means for effervescing the contents upon opening the container, e.g. bubbles in beer	**B65D79/00C**
Floating covers	B65D 81/245, B65D 83/0005, B65D 25/06

B65D 25/04

Partitions

Definition statement

This subclass/group covers:

Illustrative example of subject matter classified in this group:

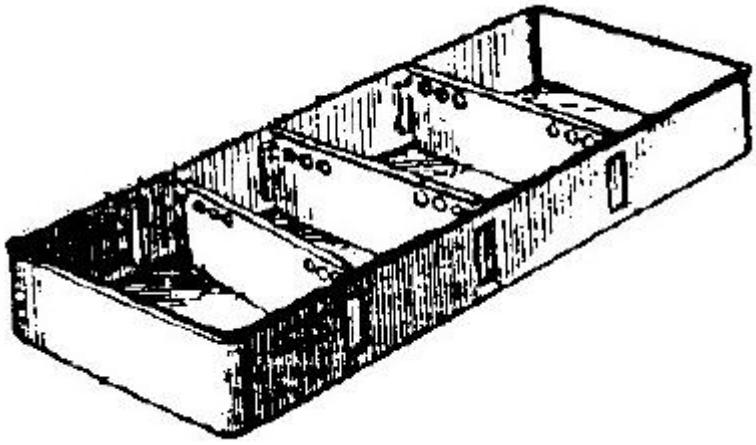

References relevant to classification in this group

This subclass/group does not cover:

Boxes or like containers with moulded compartments or partitions	B65D 1/24
Made of carton	B65D 5/48
Bottle-crates	B65D 85/305

Informative references

Attention is drawn to the following places, which may be of interest for search:

Refuse receptacles being divided in compartments by partitions	B65F 1/004

B65D 25/06

adapted to be fitted in two or more alternative positions

Definition statement

This subclass/group covers:

Illustrative example of subject matter classified in this group:

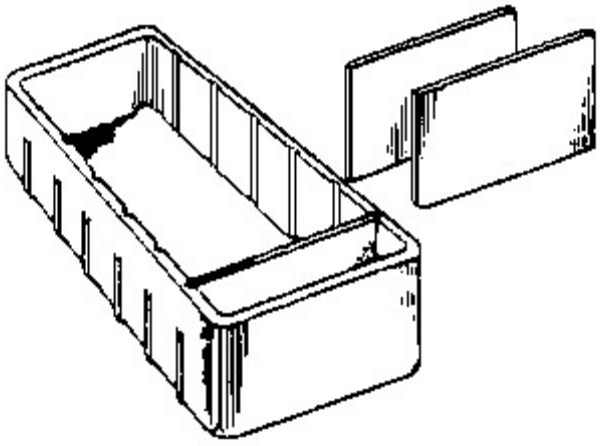

References relevant to classification in this group

This subclass/group does not cover:

Floating covers	B65D 81/245, B65D 83/0005, B65D 25/02

Informative references

Attention is drawn to the following places, which may be of interest for search:

Refuse receptacles being divided in compartments by movable partitions	B65F 1/0046

B65D 25/08

with provisions for removing or destroying, e.g. to facilitate mixing of contents

References relevant to classification in this group

This subclass/group does not cover:

Separate rigid or semi-rigid containers joined to each other or disposed within the other	B65D 81/3205, B65D 81/3216

Informative references

Attention is drawn to the following places, which may be of interest for search:

The closure presenting means for placing the additional articles or materials in contact with the main contents by acting on a part of the closure without removing the closure	B65D 51/2807

B65D 25/082

[N: the partition being in the form of a plug or the like which is removed by increasing or decreasing the pressure within the container (B65D 81/3211 takes precedence)]

Definition statement

This subclass/group covers:

Illustrative example of subject matter classified in this group:

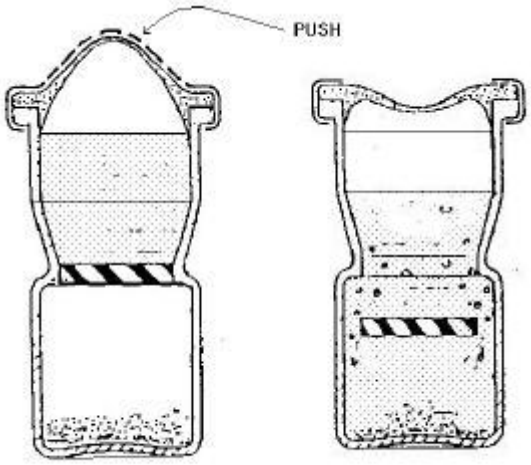

References relevant to classification in this group

This subclass/group does not cover:

Separate rigid or semi-rigid containers joined to each other at their external surfaces coaxially and provided with means facilitating admixture	B65D 81/3211

Informative references

Attention is drawn to the following places, which may be of interest for search:

Containers specially adapted for medical or pharmaceutical purposes	A61J

B65D 25/085

[N: the partition being in the form of a plug or the like which is dislodged by means of a plunger rod or the like pushing the plug down (B65D 81/3211 takes precedence)]

Definition statement

This subclass/group covers:

Illustrative example of subject matter classified in this group:

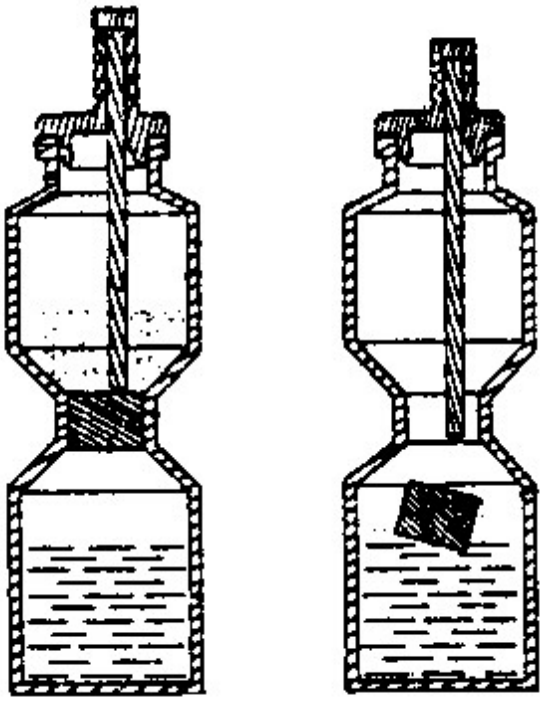

References relevant to classification in this group

This subclass/group does not cover:

Separate rigid or semi-rigid containers joined to each other at their external surfaces coaxially and provided with means facilitating admixture	B65D 81/3211

B65D 25/087

[N: the partition being in the form of a plug or the like which can be raised off its seat by means of a pull cord or the like, e.g. the plug being connected to the cap (B65D 81/3211 takes precedence)]

Definition statement

This subclass/group covers:

Illustrative example of subject matter classified in this group:

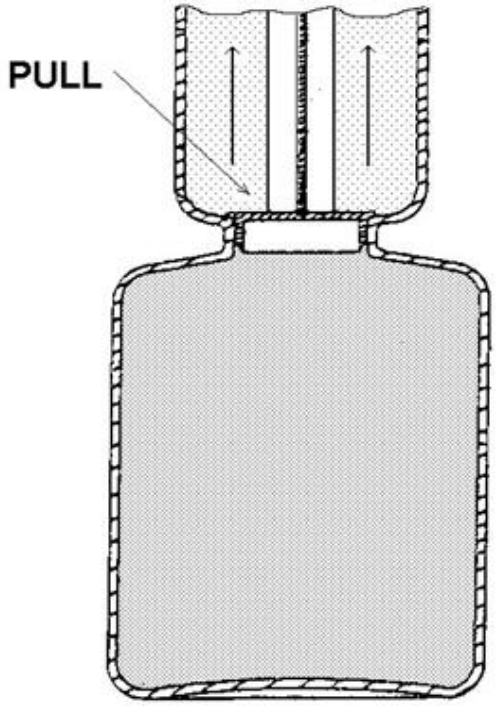

References relevant to classification in this group

This subclass/group does not cover:

Separate rigid or semi-rigid containers joined to each other at their external surfaces coaxially and provided with means facilitating admixture	B65D 81/3211

B65D 25/10

Devices to locate articles in containers [N: (for protecting

articles from mechanical damage B65D 81/02)]

References relevant to classification in this group

This subclass/group does not cover:

Needles	A41H 19/00
Pencils	A45C 11/34
Drills	B25H 3/003
Tools	B25H 3/02
Glass sheets	B65D 85/48
Bulky articles	B65D 85/64
Machines, engines, vehicles	B65D 85/68
Record carriers	G11B 33/04
Printed circuit boards	H05K 13/0069

Informative references

Attention is drawn to the following places, which may be of interest for search:

Elements formed separately from the container body	B65D 5/5028
Elements or devices for locating or protecting articles	B65D 77/26
Maintaining contents at spaced relation from package walls, or from other contents using blocks of shock-absorbing material of a shape specially adapted to accommodate contents	B65D 81/133

B65D 25/101

[N: Springs, elastic lips, or other resilient elements to locate

the articles by pressure (B65D 25/102, B65D 25/103 take precedence)]

Definition statement

This subclass/group covers:

Illustrative example of subject matter classified in this group:

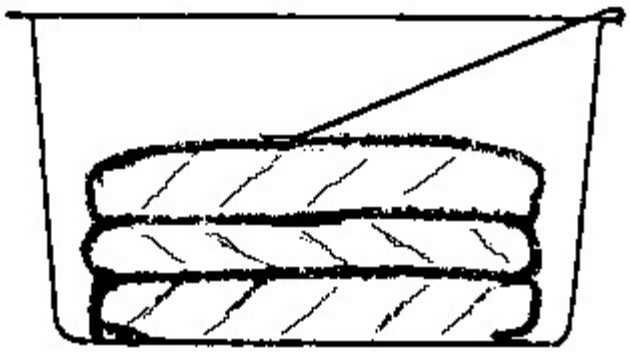

References relevant to classification in this group

This subclass/group does not cover:

Straps, bands, strings or other elongate elements	B65D 25/102
V-shaped elements	B65D 25/103

B65D 25/102

[N: Straps, bands, strings or other elongate elements]

Definition statement

This subclass/group covers:

Illustrative example of subject matter classified in this group:

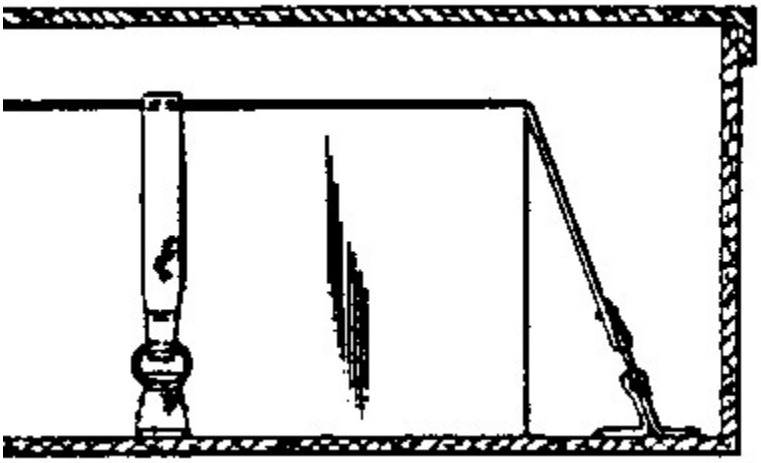

B65D 25/103

[N: V-shaped elements, e.g. racks, protuberances projecting from a supporting surface, supporting the articles locally at its sides (B65D 25/107 takes precedence)]

Definition statement

This subclass/group covers:

Illustrative example of subject matter classified in this group:

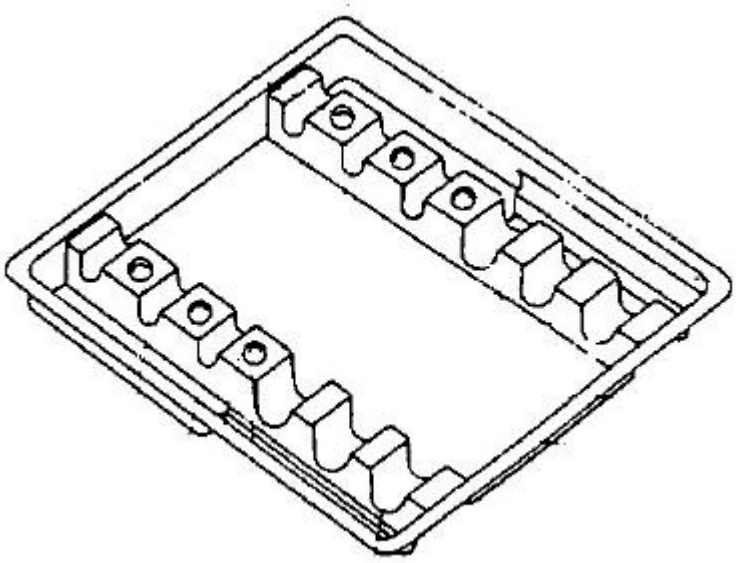

References relevant to classification in this group

This subclass/group does not cover:

Grooves, ribs, or the like, situated on	B65D 25/107

opposed walls and between which the articles are located	

Informative references

Attention is drawn to the following places, which may be of interest for search:

Maintaining contents at spaced relation from package walls, or from other contents using blocks of shock-absorbing material of a shape specially adapted to accommodate contents	B65D 81/133

B65D 25/105

[N: and retaining it by snap-action, e.g. clips]

Definition statement

This subclass/group covers:

Illustrative example of subject matter classified in this group:

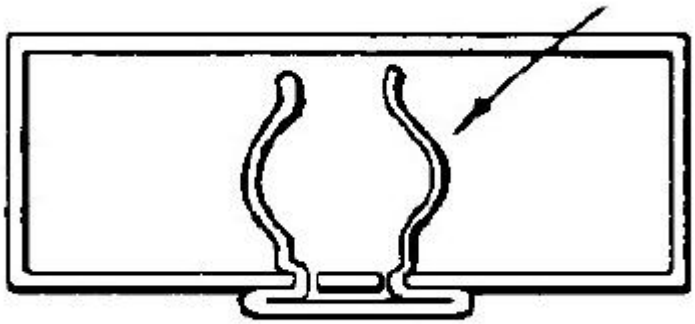

References relevant to classification in this group

This subclass/group does not cover:

Releasable fastenings clips	F16B 2/20

B65D 25/106

[N: Elements projecting into a recess or through a hole in the

articles]

Definition statement

This subclass/group covers:
Illustrative example of subject matter classified in this group:

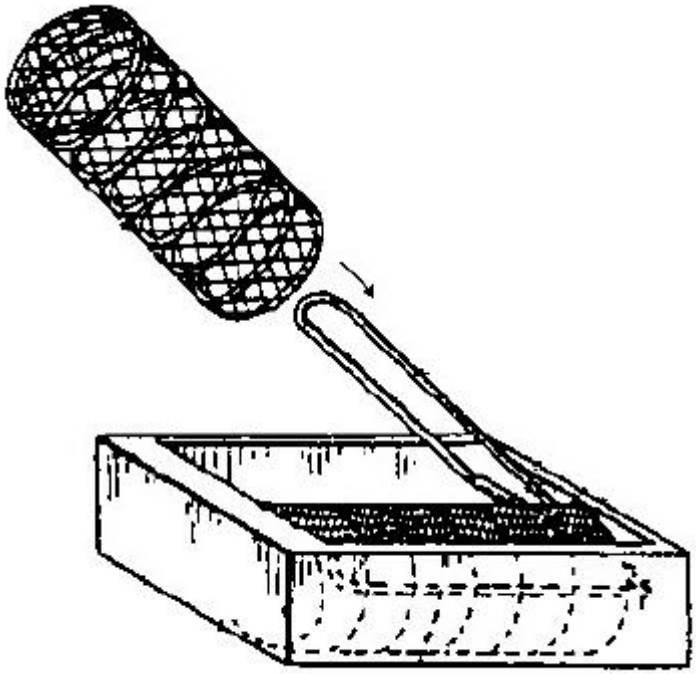

B65D 25/107

[N: Grooves, ribs, or the like, situated on opposed walls and between which the articles are located]

Definition statement

This subclass/group covers:
Illustrative example of subject matter classified in this group:

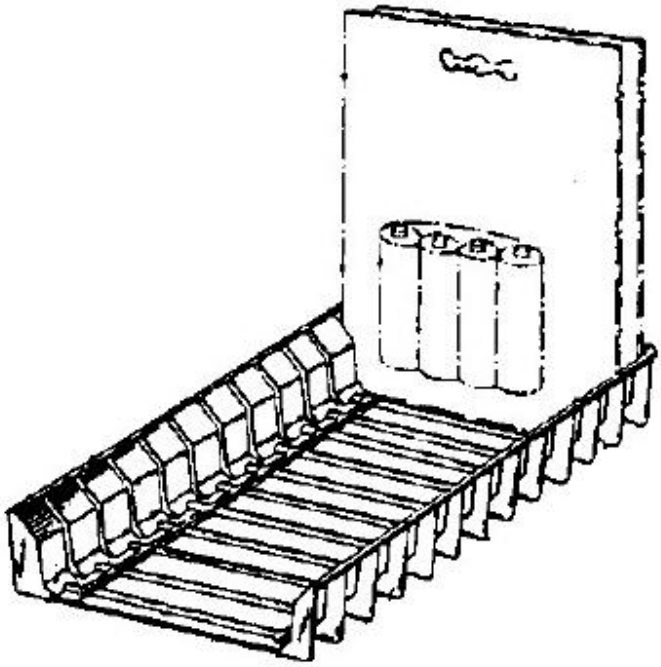

Informative references

Attention is drawn to the following places, which may be of interest for search:

Maintaining contents at spaced relation from package walls, or from other contents using blocks of shock-absorbing material of a shape specially adapted to accommodate contents	B65D 81/133

B65D 25/108

[N: Devices, e.g. plates, presenting apertures through which the articles project]

Definition statement

This subclass/group covers:

Illustrative example of subject matter classified in this group:

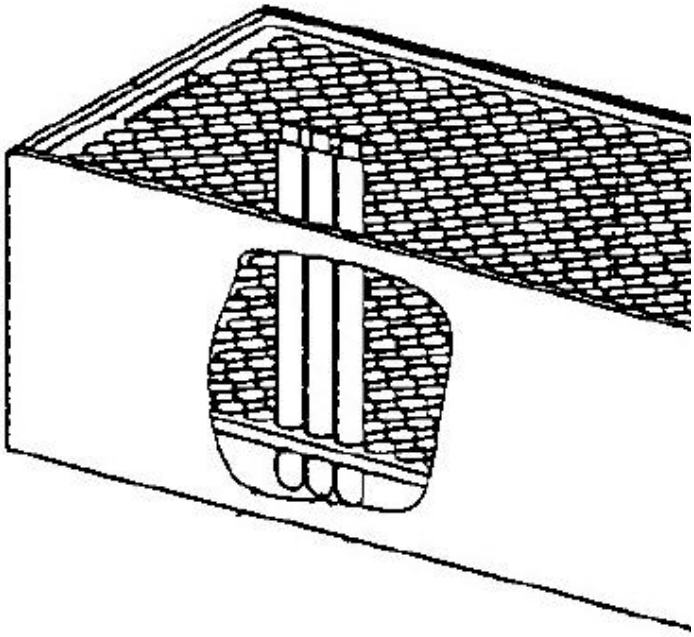

Informative references

Attention is drawn to the following places, which may be of interest for search:

Tray-like elements formed by folding a blank and presenting openings or recesses	B65D 5/5038

B65D 25/14

Linings or internal coatings (of containers made by folding or erecting blanks made of paper B65D 5/56; [N: linings for domestic water storage heaters F24H 1/183])

Definition statement

This subclass/group covers:

Illustrative example of subject matter classified in this group:

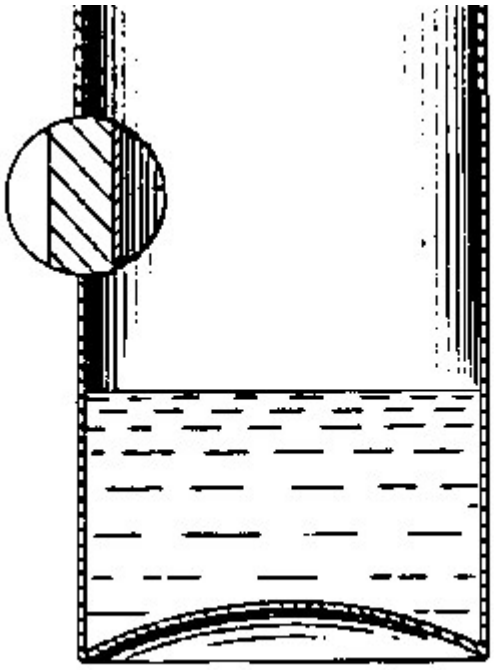

B65D 25/16

Loose, or loosely-attached, linings

Definition statement

This subclass/group covers:
Illustrative example of subject matter classified in this group:

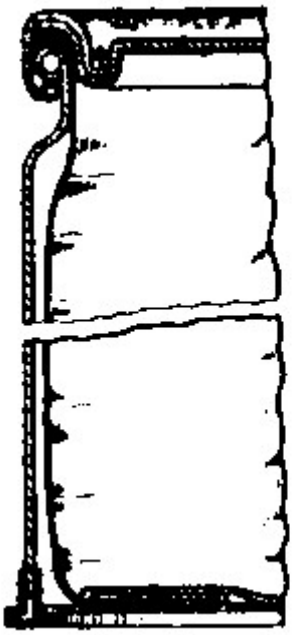

References relevant to classification in this group

This subclass/group does not cover:

Sack holders, i.e. stands or frames with means for supporting sacks in the open condition to facilitate filling with articles or materials	B65B 67/12

Special rules of classification within this group

The use of available Indexing Codes is mandatory.

B65D 25/18

spaced appreciably from container wall

Definition statement

This subclass/group covers:

Illustrative example of subject matter classified in this group:

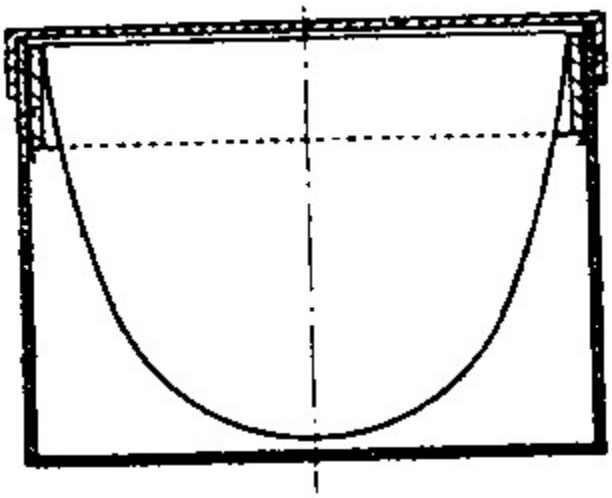

B65D 25/205

[N: Means for the attachment of labels, cards, coupons or the like; (Cards or coupons for the other types of rigid or semi-rigid containers B65D 25/36 takes precedence)]

Definition statement

This subclass/group covers:

Illustrative example of subject matter classified in this group:

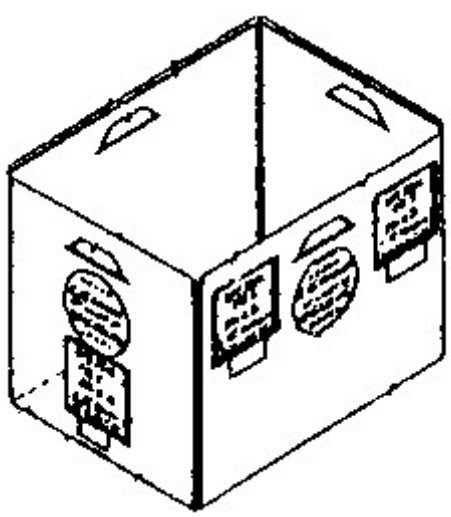

References relevant to classification in this group

This subclass/group does not cover:

Labels or the like for bottles	B65D 23/14
Coverings or extra coatings formed by applying sheet material	B65D 25/36
Lids with labels	B65D 51/245
Shipping mailers	B65D 75/545

Informative references

Attention is drawn to the following places, which may be of interest for search:

Information on decoration elements, e.g. content indicators, or for mailing	B65D 5/4212
Information on decoration elements, e.g. level indicators, detachable pads or coupons	B65D 33/004
The inserts or accessories being located within a pouch or envelope attached to the exterior of the packages, e.g. shipping mailers	B65D 75/545

Special rules of classification within this group

The use of available Indexing Codes is mandatory.

B65D 25/22

for facilitating lifting or suspending of containers

Definition statement

This subclass/group covers:
Illustrative example of subject matter classified in this group:

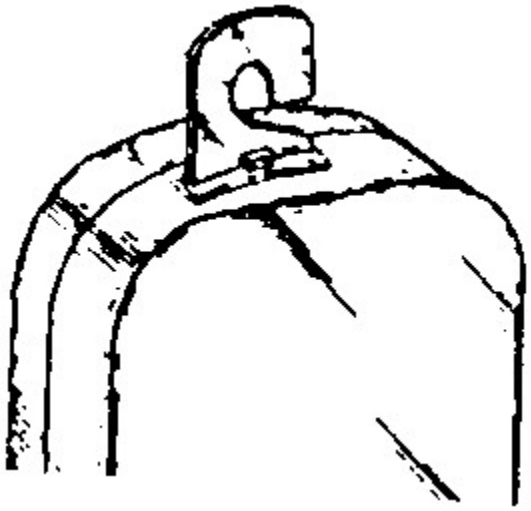

References relevant to classification in this group

This subclass/group does not cover:

Closures provided with means for facilitating lifting or suspending of the container	B65D 51/242
Devices for transporting bundles from above, e.g. by cranes	**L65D71/00P10**
Pen-like pill containers with pocket-clip	**L65D83/04S1**

Informative references

Attention is drawn to the following places, which may be of interest for search:

Means facilitating suspending, lifting,	B65D 5/4208

handling, or the like of containers	
Handles or other suspension means	B65D 75/56

Special rules of classification within this group

The use of available Indexing Codes is mandatory.

B65D 25/24

for spacing bases of containers from supporting surfaces, e.g. legs (for pallets B65D 19/40)

Definition statement

This subclass/group covers:

Illustrative example of subject matter classified in this group:

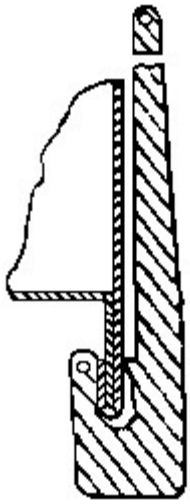

References relevant to classification in this group

This subclass/group does not cover:

Isolated supports for palletisable loads (isolated feet)	B65D 71/0088
Isolated supports for palletisable loads (isolated skids)	B65D 71/0092
For large containers	B65D 90/12

B65D 25/28

Handles (of containers made by folding or erecting blanks made of paper B65D 5/46; of bottles or jars B65D 23/10; [N: holders for glasses, bottles, cartons, plastic bags, cans A47G 23/02])

References relevant to classification in this group

This subclass/group does not cover:

Handles for carrying holders, or carriers for hand articles	A45F 5/10

Special rules of classification within this group

The use of available Indexing Codes is mandatory.

B65D 25/2802

[N: fixed, i.e. non-swingable, handles (B65D 25/2867, B65D 25/2882 take precedence)]

References relevant to classification in this group

This subclass/group does not cover:

With respective ends fixed to local areas of two opposite sides or wall-part	B65D 25/2867
Integral handles	B65D 25/2882

Special rules of classification within this group

The use of available Indexing Codes is mandatory.

B65D 25/2805

[N: provided on a local area of the side walls]

Special rules of classification within this group

The use of available Indexing Codes is mandatory.

B65D 25/2808

[N: Horizontal, e.g. U-shaped]

Definition statement

This subclass/group covers:
Illustrative example of subject matter classified in this group:

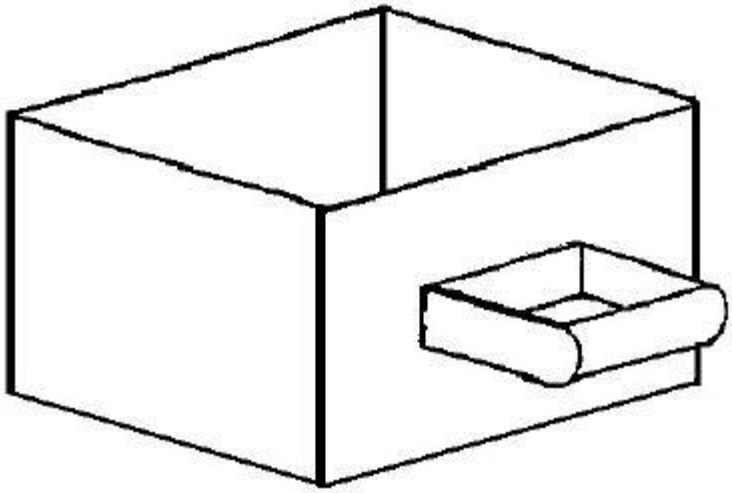

Special rules of classification within this group

The use of available Indexing Codes is mandatory.

B65D 25/2811

[N: Vertical, e.g. U-shaped]

Definition statement

This subclass/group covers:
Illustrative example of subject matter classified in this group:

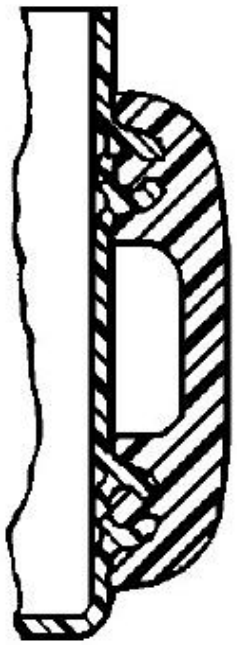

Special rules of classification within this group

The use of available Indexing Codes is mandatory.

B65D 25/2814

[N: as a part or combined with a label or wrapping sheet or tube]

Definition statement

This subclass/group covers:

Illustrative example of subject matter classified in this group:

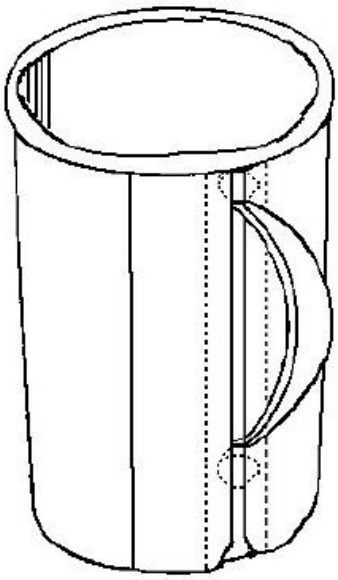

Special rules of classification within this group

The use of available Indexing Codes is mandatory.

B65D 25/2817

[N: fixed by means of one or more collars]

Definition statement

This subclass/group covers:
Illustrative example of subject matter classified in this group:

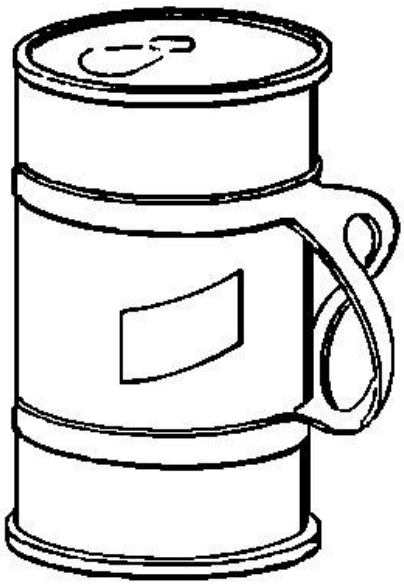

Special rules of classification within this group

The use of available Indexing Codes is mandatory.

B65D 25/282

[N: provided on a local area near to or at the upper edge or rim]

Definition statement

This subclass/group covers:

Illustrative example of subject matter classified in this group:

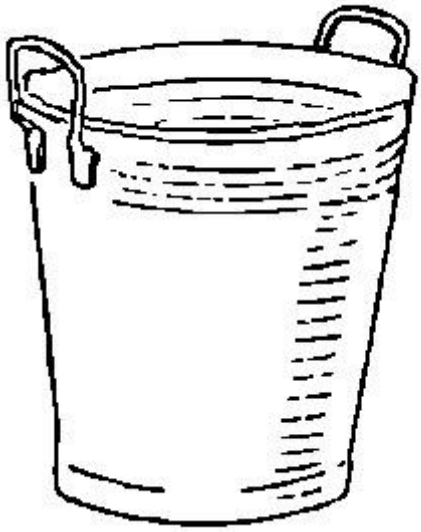

Special rules of classification within this group

The use of available Indexing Codes is mandatory.

B65D 25/2823

[N: centrally located in open container]

Definition statement

This subclass/group covers:

Illustrative example of subject matter classified in this group:

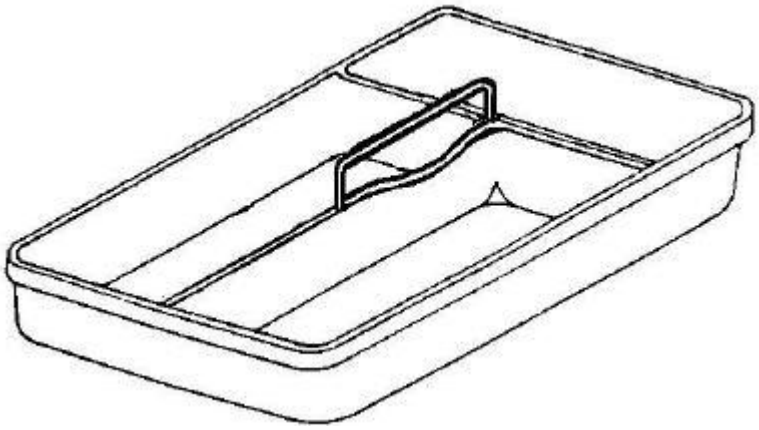

Special rules of classification within this group

The use of available Indexing Codes is mandatory.

B65D 25/2826

[N: provided on a local area of the upper (top) wall, e.g. U-shaped]

Definition statement

This subclass/group covers:
Illustrative example of subject matter classified in this group:

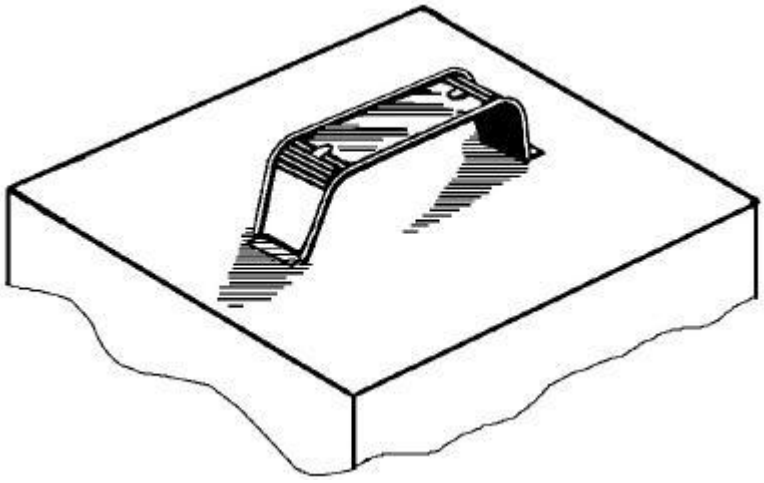

Special rules of classification within this group

The use of available Indexing Codes is mandatory.

B65D 25/2829

[N: provided vertically and fixed to the upper and the lower rims or edges]

Definition statement

This subclass/group covers:
Illustrative example of subject matter classified in this group:

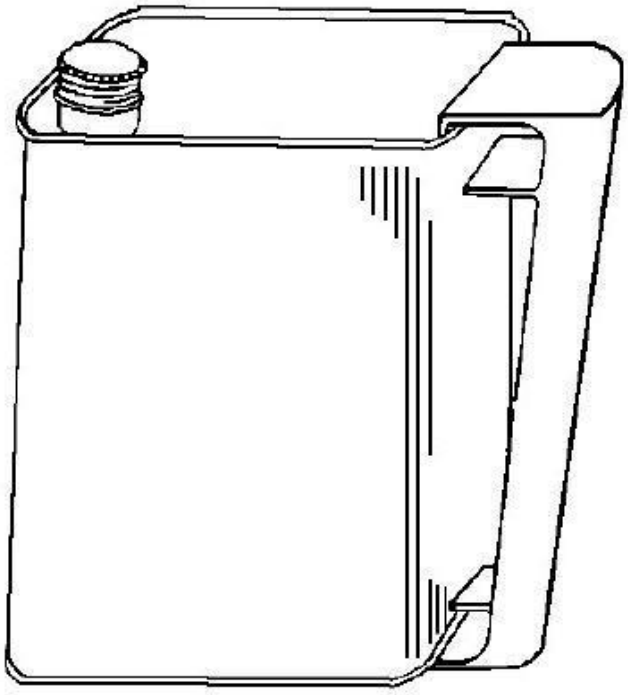

Special rules of classification within this group

The use of available Indexing Codes is mandatory.

B65D 25/2832

[N: provided vertically and fixed to the upper or lower rim and to the side wall]

Definition statement

This subclass/group covers:
Illustrative example of subject matter classified in this group:

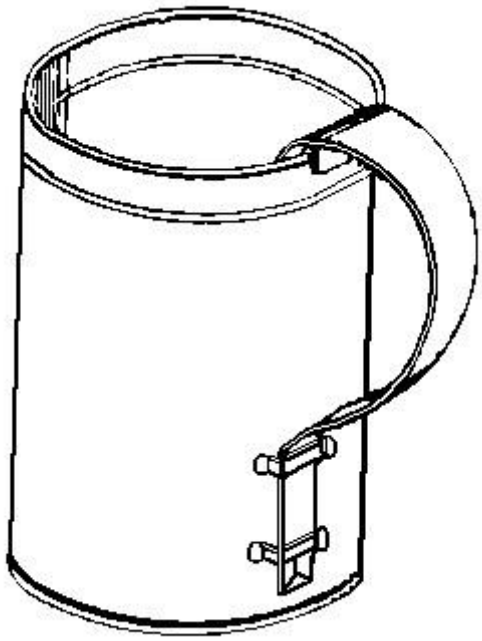

Special rules of classification within this group

The use of available Indexing Codes is mandatory.

B65D 25/2835

[N: Swingable handles (B65D 25/2867 and B65D 25/2882 take precedence; bails B65D 25/32)]

References relevant to classification in this group

This subclass/group does not cover:

With respective ends fixed to local areas of two opposite sides or wall-part	B65D 25/2867
Integral handles	B65D 25/2882

Special rules of classification within this group

The use of available Indexing Codes is mandatory.

B65D 25/2838

[N: provided on a local area of the side wall(s)]

Special rules of classification within this group

The use of available Indexing Codes is mandatory.

B65D 25/2841

[N: Horizontal, e.g. U-shaped]

Definition statement

This subclass/group covers:
Illustrative example of subject matter classified in this group:

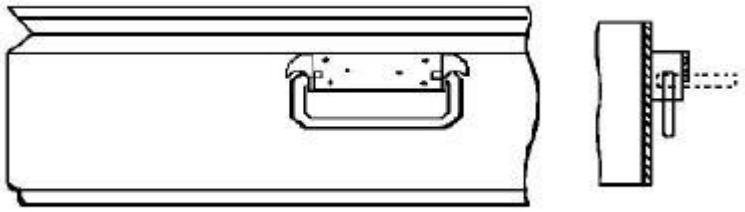

Special rules of classification within this group

The use of available Indexing Codes is mandatory.

B65D 25/2844

[N: Vertical, e.g. U-shaped]

Definition statement

This subclass/group covers:
Illustrative example of subject matter classified in this group:

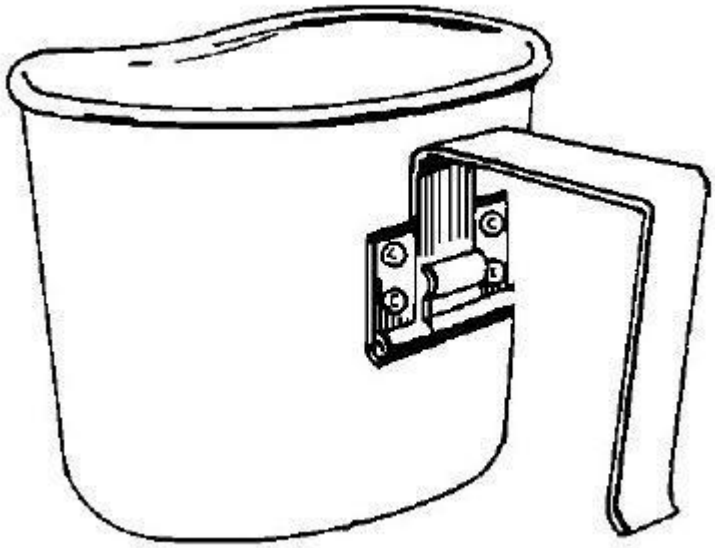

Special rules of classification within this group

The use of available Indexing Codes is mandatory.

B65D 25/2847

[N: as a part or combined with a label or wrapping sheet or tube]

Definition statement

This subclass/group covers:

Illustrative example of subject matter classified in this group:

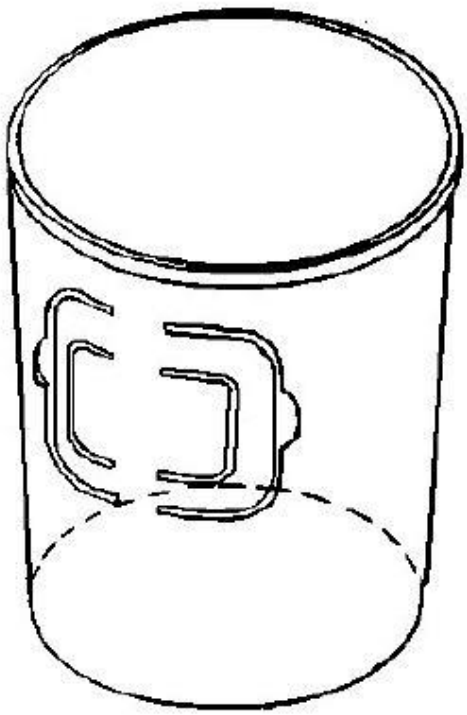

Special rules of classification within this group

The use of available Indexing Codes is mandatory.

B65D 25/285

[N: fixed by means of one or more collars]

Definition statement

This subclass/group covers:
Illustrative example of subject matter classified in this group:

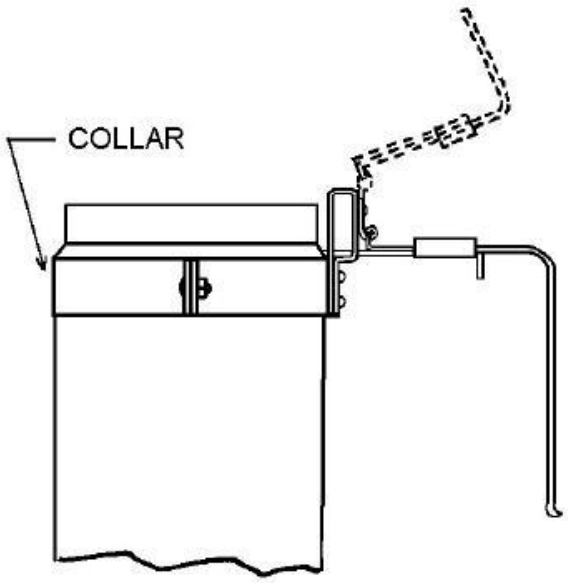

Special rules of classification within this group

The use of available Indexing Codes is mandatory.

B65D 25/2852

[N: provided on a local area near to or at the upper edge or rim]

Definition statement

This subclass/group covers:

Illustrative example of subject matter classified in this group:

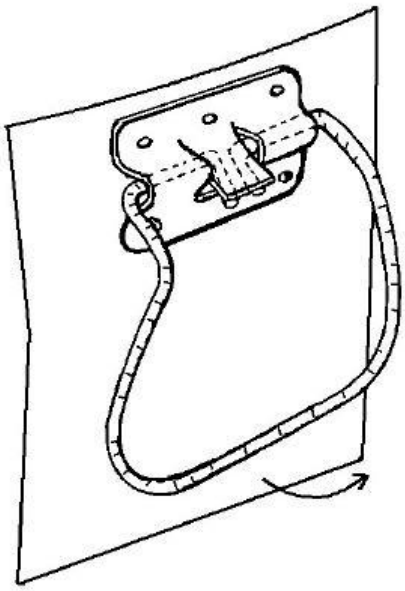

Special rules of classification within this group

The use of available Indexing Codes is mandatory.

B65D 25/2855

[N: centrally located in open container]

Definition statement

This subclass/group covers:
Illustrative example of subject matter classified in this group:

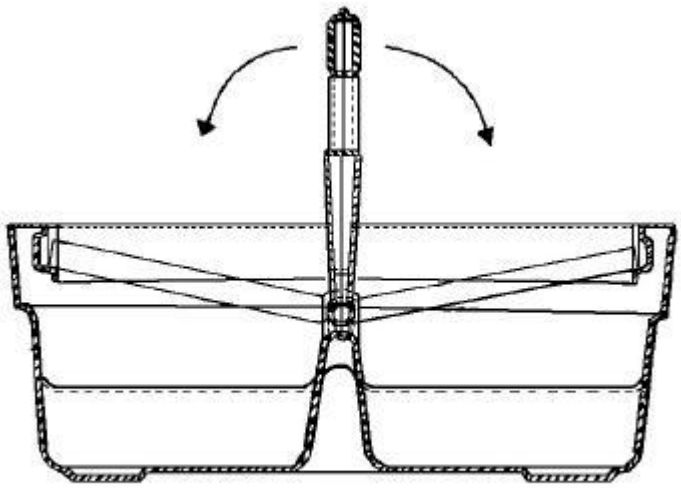

Special rules of classification within this group

The use of available Indexing Codes is mandatory.

B65D 25/2858

[N: provided on a local area of the upper (top) wall, e.g. U-shaped]

Definition statement

This subclass/group covers:

Illustrative example of subject matter classified in this group:

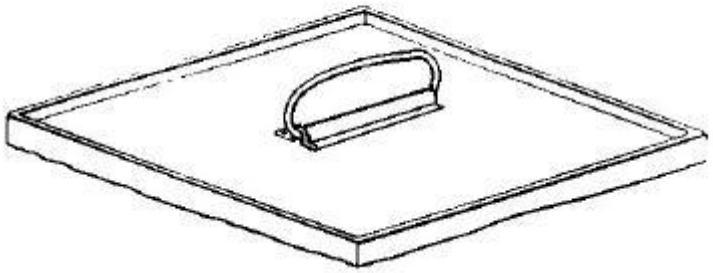

Special rules of classification within this group

The use of available Indexing Codes is mandatory.

B65D 25/2861

[N: provided vertically and fixed to the upper and the lower rims or edges]

Definition statement

This subclass/group covers:

Illustrative example of subject matter classified in this group:

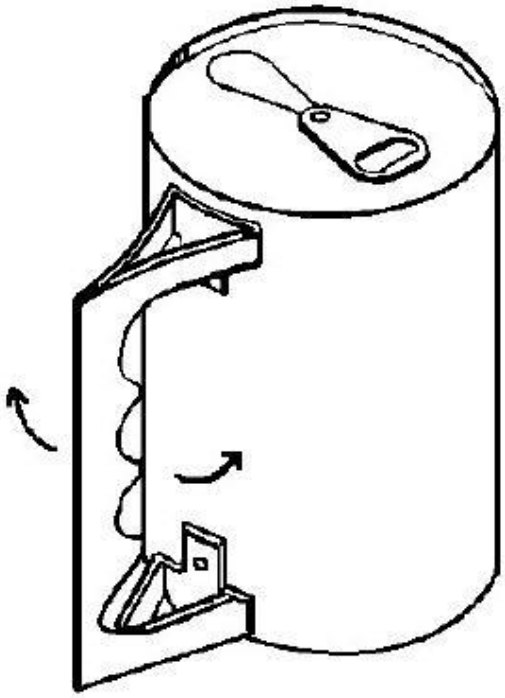

Special rules of classification within this group

The use of available Indexing Codes is mandatory.

B65D 25/2864

[N: provided vertically and fixed to the upper or lower rim and to the side wall]

Special rules of classification within this group

The use of available Indexing Codes is mandatory.

B65D 25/2867

[N: with respective ends fixed to local areas of two opposite sides or wall-part (bails B65D 25/32)]

Special rules of classification within this group

The use of available Indexing Codes is mandatory.

B65D 25/287

[N: Rope or string]

Definition statement

This subclass/group covers:
Illustrative example of subject matter classified in this group:

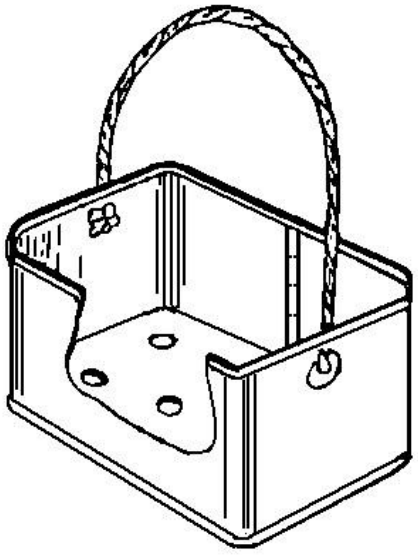

Special rules of classification within this group

The use of available Indexing Codes is mandatory.

B65D 25/2873

[N: Straps or slings]

Definition statement

This subclass/group covers:
Illustrative example of subject matter classified in this group:

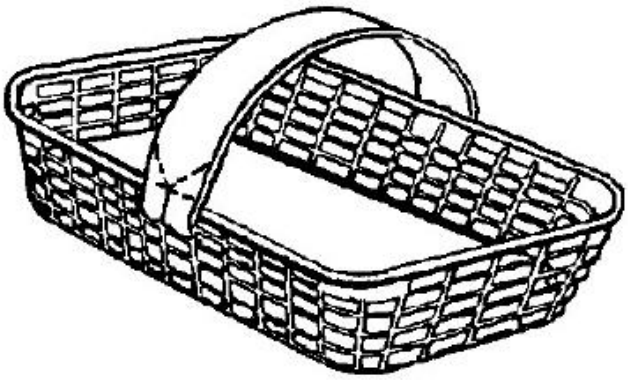

B65D 25/2876

[N: fixed by means of a collar]

Definition statement

This subclass/group covers:
Illustrative example of subject matter classified in this group:

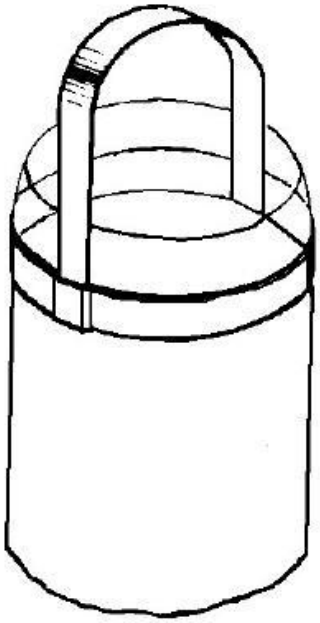

Special rules of classification within this group

The use of available Indexing Codes is mandatory.

B65D 25/2879

[N: wire-like]

Definition statement

This subclass/group covers:
Illustrative example of subject matter classified in this group:

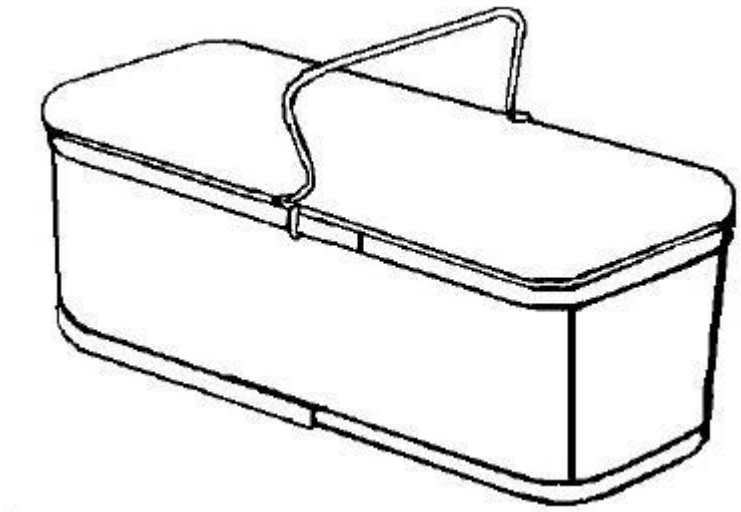

Special rules of classification within this group

The use of available Indexing Codes is mandatory.

B65D 25/2882

[N: Integral handles (B65D 25/2867 takes precedence)]

References relevant to classification in this group

This subclass/group does not cover:

With respective ends fixed to local areas of two opposite sides or wall-part	B65D 25/2867

Special rules of classification within this group

The use of available Indexing Codes is mandatory.

B65D 25/2885

[N: provided on the side wall]

Definition statement

This subclass/group covers:
Illustrative example of subject matter classified in this group:

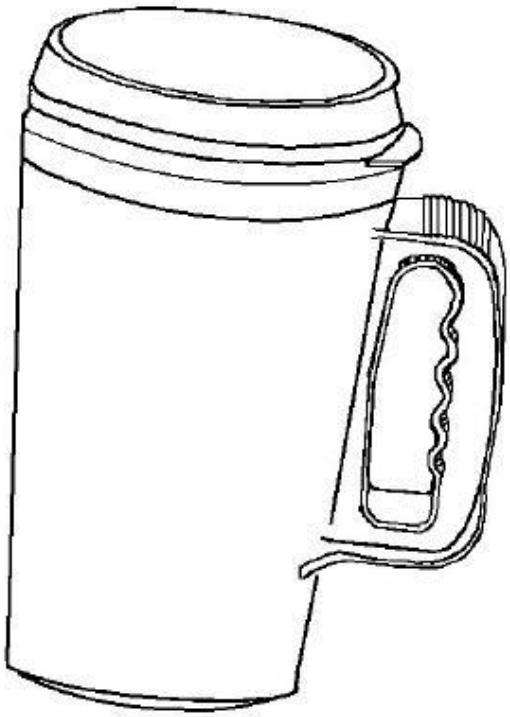

Special rules of classification within this group

The use of available Indexing Codes is mandatory.

B65D 25/2888

[N: provided near to or at the upper edge or rim]

Definition statement

This subclass/group covers:
Illustrative example of subject matter classified in this group:

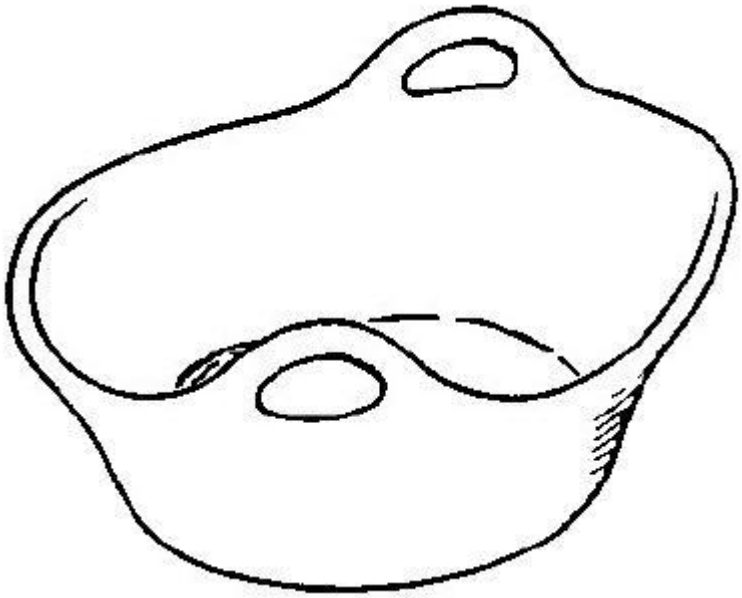

Special rules of classification within this group

The use of available Indexing Codes is mandatory.

B65D 25/2891

[N: centrally located in open container]

Definition statement

This subclass/group covers:
Illustrative example of subject matter classified in this group:

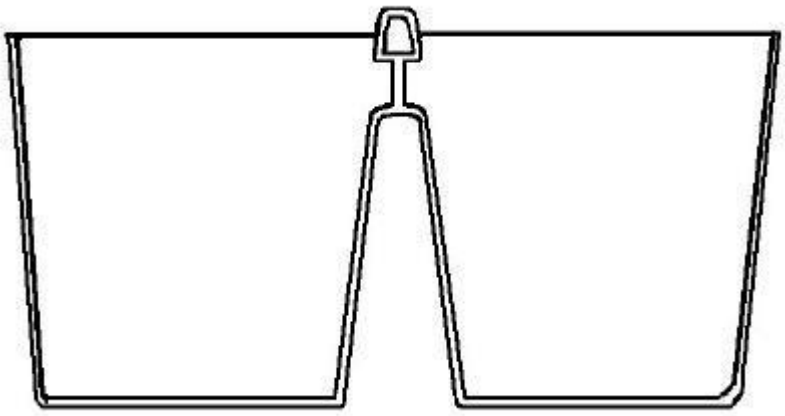

Special rules of classification within this group

The use of available Indexing Codes is mandatory.

B65D 25/2894

[N: provided on the top or upper wall]

Definition statement

This subclass/group covers:
Illustrative example of subject matter classified in this group:

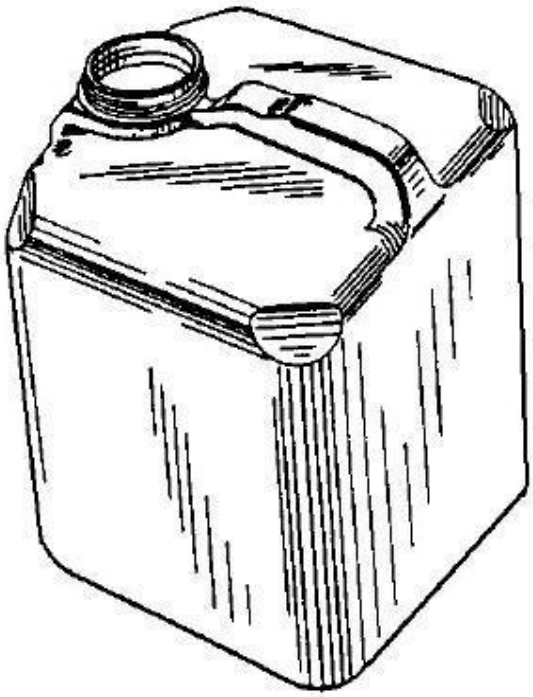

Special rules of classification within this group

The use of available Indexing Codes is mandatory.

B65D 25/2897

[N: formed in the wall(s), e.g. roughenings, cavities or projections]

Definition statement

This subclass/group covers:
Illustrative example of subject matter classified in this group:

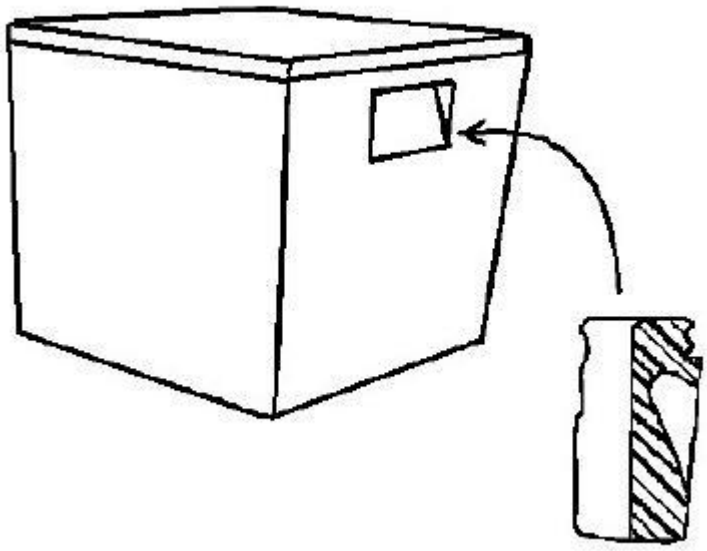

Special rules of classification within this group

The use of available Indexing Codes is mandatory.

B65D 25/30

Hand holes

Definition statement

This subclass/group covers:
Illustrative example of subject matter classified in this group:

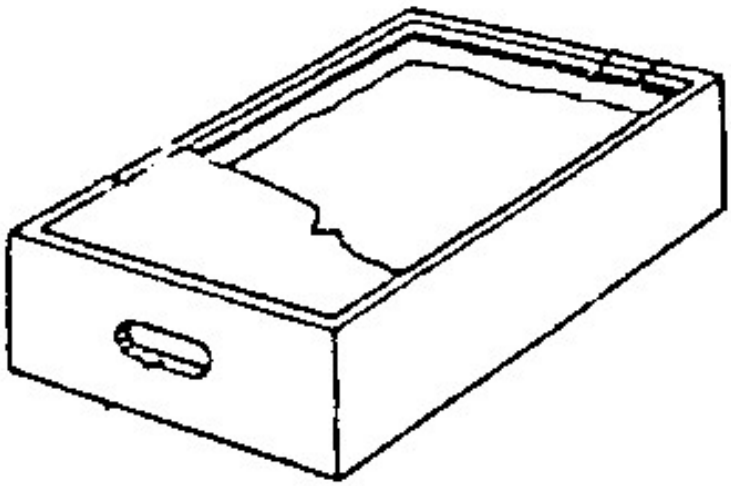

B65D 25/32

Bail handles, i.e. pivoted [N: rigid] handles of generally semi-circular shape [N: with pivot points on two opposed sides or wall parts of the container]

Definition statement

This subclass/group covers:

Illustrative example of subject matter classified in this group:

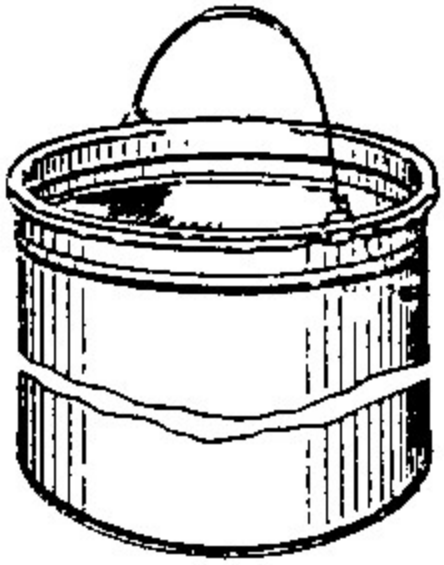

Informative references

Attention is drawn to the following places, which may be of interest for search:

Bails, e.g. for pails, for kettles	A47J 45/065
Pails for kitchen use	A47J 47/18
Bail handles, i.e. pivoted handles of generally semi-circular or loop shape	B65D 23/108

B65D 25/325

[N: integrally formed with the container]

Definition statement

This subclass/group covers:

Illustrative example of subject matter classified in this group:

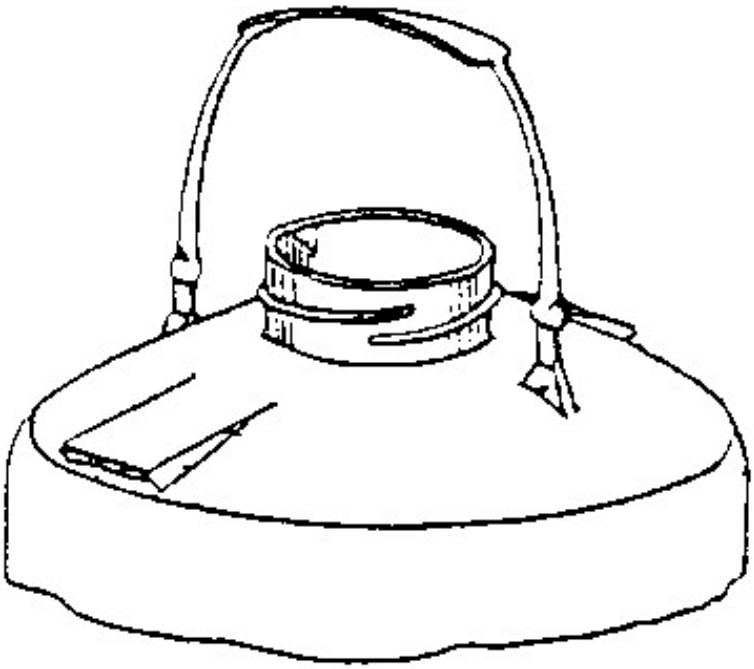

B65D 25/34

Coverings or external coatings (of containers made by folding or erecting blanks made of paper B65D 5/62; for bottles or jars B65D 23/08; wrappers B65D 65/00)

Definition statement

This subclass/group covers:

Illustrative example of subject matter classified in this group:

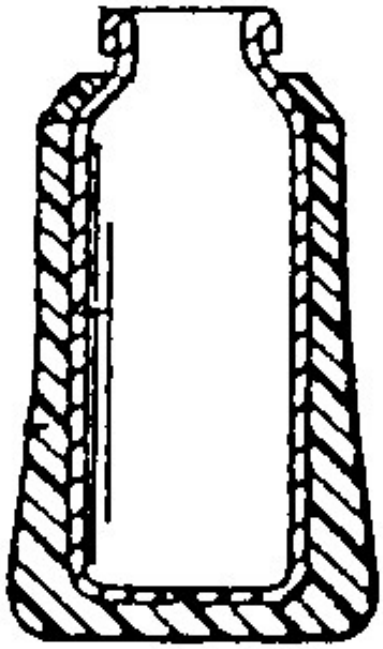

Informative references

Attention is drawn to the following places, which may be of interest for search:

External coverings or coatings	B65D 5/62

B65D 25/36

formed by applying sheet material

Definition statement

This subclass/group covers:
Illustrative example of subject matter classified in this group:

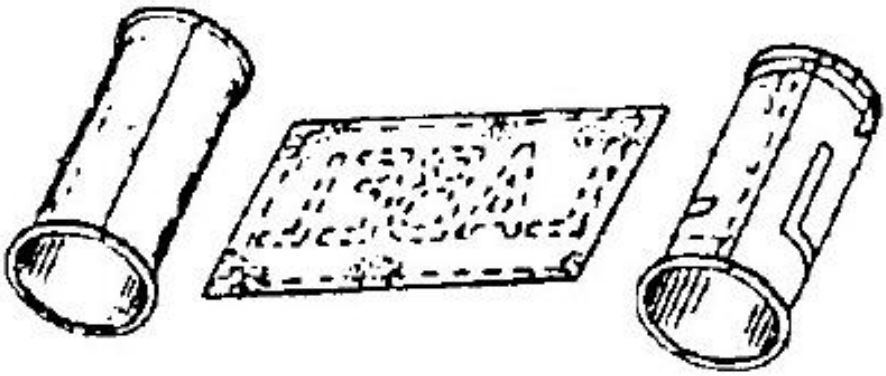

Informative references

Attention is drawn to the following places, which may be of interest for search:

External coverings or coatings	B65D 5/62
Articles enclosed in rigid or semi-rigid containers, the whole being wrapped	B65D 77/003

B65D 25/38

Devices for discharging contents ([N: containers formed by folding or erecting paper blanks B65D 5/72]; incorporated in removable or non-permanently secured closure members B65D 47/00; for discharging thin flat articles B65D 83/08)

References relevant to classification in this group

This subclass/group does not cover:

Devices for releasing contents from the container, e.g. demoulding	B65D 85/72

Informative references

Attention is drawn to the following places, which may be of interest for search:

Precut holes per weakened zones	B65D 2231/02

B65D 25/385

[N: with means for preventing inflammation or explosion during discharging of inflammable or explosive substances from containers, e.g. from petroleum cans]

Definition statement

This subclass/group covers:

Illustrative example of subject matter classified in this group:

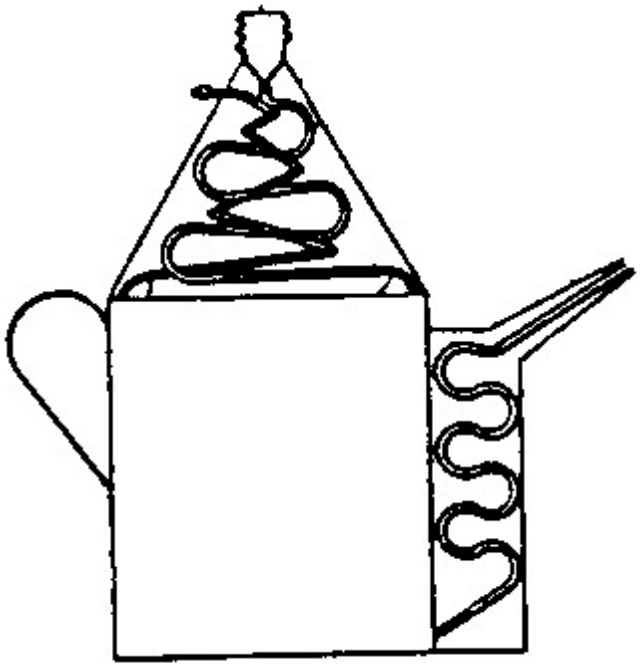

B65D 25/40

Nozzles or spouts (in general B05B)

References relevant to classification in this group

This subclass/group does not cover:

Caulking nozzles	B05C 17/00503

Informative references

Attention is drawn to the following places, which may be of interest for search:

Closures, with discharging devices other than pumps, with pouring spouts or tubes with discharge nozzles or passages	B65D 47/06

B65D 25/42

Integral or attached nozzles or spouts

Definition statement

This subclass/group covers:
Illustrative example of subject matter classified in this group:

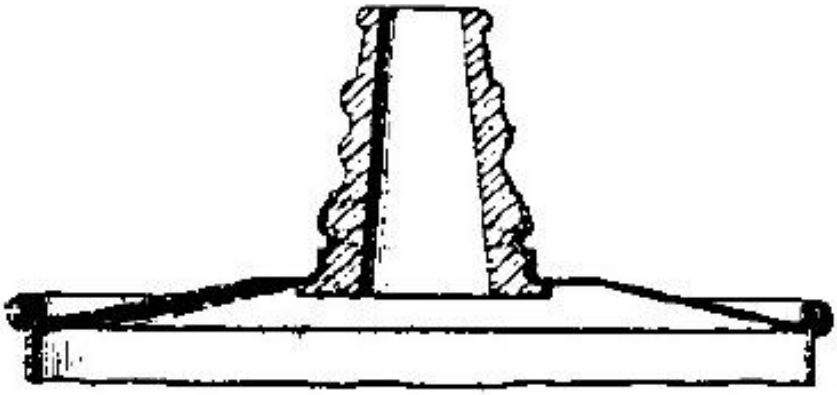

References relevant to classification in this group

This subclass/group does not cover:

Caulking nozzles	B05C 17/005

Informative references

Attention is drawn to the following places, which may be of interest for search:

Closures, with discharging devices other than pumps, with pouring spouts or tubes with discharge nozzles or passages	B65D 47/06

B65D 25/44

Telescopic or retractable nozzles or spouts

Definition statement

This subclass/group covers:
Illustrative example of subject matter classified in this group:

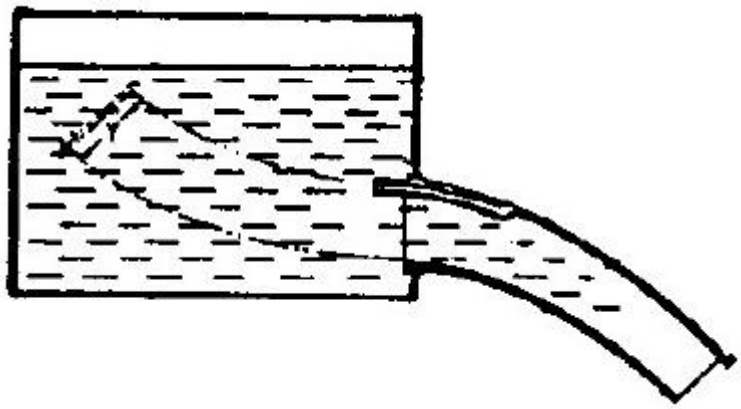

References relevant to classification in this group

This subclass/group does not cover:

Caulking nozzles	B05C 17/00503

Informative references

Attention is drawn to the following places, which may be of interest for search:

Closures, with discharging devices other than pumps, with flexible parts	B65D 47/061

B65D 25/46

Hinged, [N: foldable] or pivoted nozzles or spouts

References relevant to classification in this group

This subclass/group does not cover:

Caulking nozzles	B05C 17/00503

Informative references

Attention is drawn to the following places, which may be of interest for search:

Closures, with discharging devices other than pumps, with pouring spouts or tubes with discharge nozzles or passages	B65D 47/065

B65D 25/465

[N: the spout being either flexible or having a flexible wall portion, whereby the spout is foldable between a dispensing and a non-dispensing position]

Definition statement

This subclass/group covers:

Illustrative example of subject matter classified in this group:

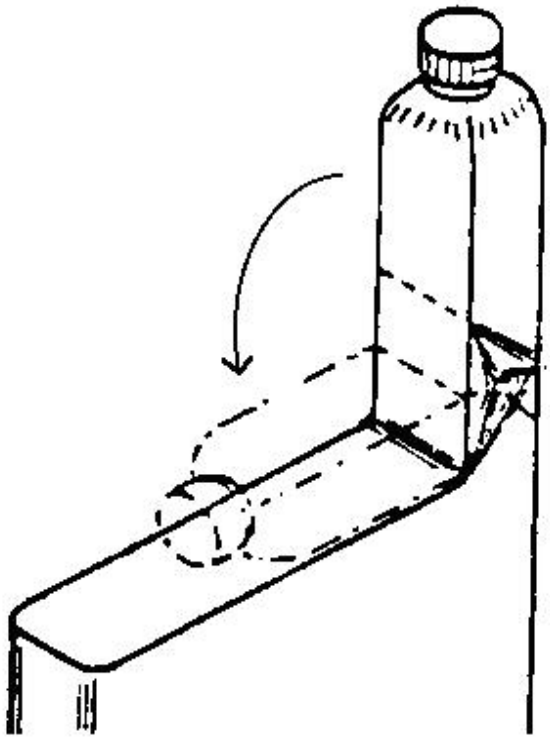

References relevant to classification in this group

This subclass/group does not cover:

Caulking nozzles	B05C 17/00503
Bellows-like spouts	B65D 25/44

Informative references

Attention is drawn to the following places, which may be of interest for search:

The spout being either flexible or	B65D 47/066

having a flexible wall portion, whereby the spout is foldable between a dispensing and a non-dispensing position	

B65D 25/48

Separable nozzles or spouts

Definition statement

This subclass/group covers:

Illustrative example of subject matter classified in this group:

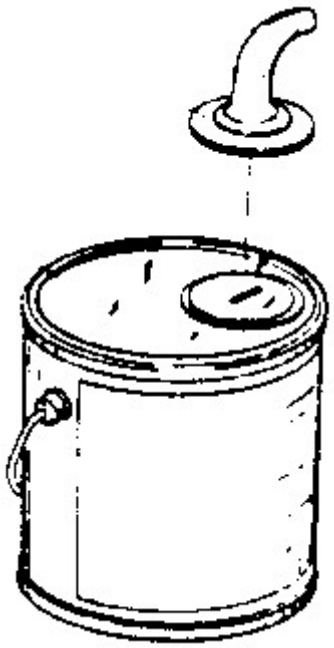

References relevant to classification in this group

This subclass/group does not cover:

Caulking nozzles	B05C 17/00503

Special rules of classification within this group

The use of available Indexing Codes is mandatory.

B65D 25/50

arranged to be plugged in two alternate positions

Definition statement

This subclass/group covers:
Illustrative example of subject matter classified in this group:

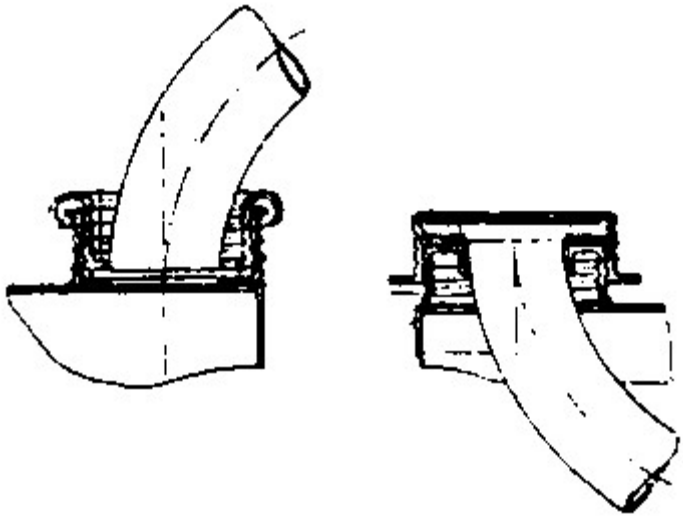

Informative references

Attention is drawn to the following places, which may be of interest for search:

With removable spouts which can be plugged in a discharging and in a position	B65D 47/068

B65D 25/52

Devices for discharging successive articles or portions of contents

Informative references

Attention is drawn to the following places, which may be of interest for search:

Contents-dispensing means for discharging metered quantities	B65D 5/76

B65D 25/525

[N: Swivelling devices, comprising a bottom wall and two side walls]

Definition statement

This subclass/group covers:

Illustrative example of subject matter classified in this group:

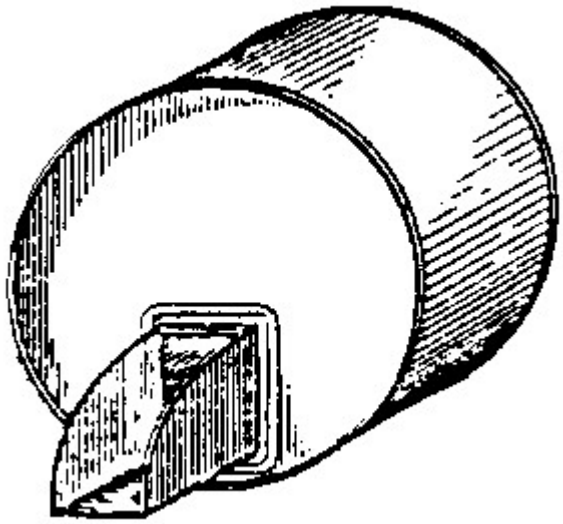

Informative references

Attention is drawn to the following places, which may be of interest for search:

Closures with swivelling dispensing devices(containers with swivelling devices comprising a bottom wall and two side walls	B65D 47/046

B65D 25/54

Inspection openings or windows

Definition statement

This subclass/group covers:

Illustrative example of subject matter classified in this group:

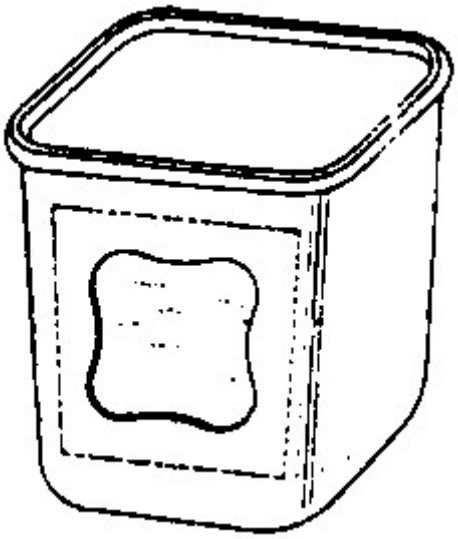

References relevant to classification in this group

This subclass/group does not cover:

Side walls formed with an aperture or a movable portion arranged to allow removal or insertion of contents	B65D 25/005

B65D 25/56

with means for indicating level of contents

Definition statement

This subclass/group covers:

Illustrative example of subject matter classified in this group:

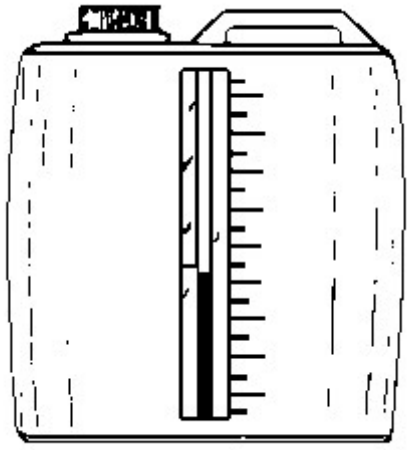

References relevant to classification in this group

This subclass/group does not cover:

Measuring cups	G01F 19/00

B65D 27/00

Envelopes or like essentially-rectangular containers for postal or other purposes having no structural provision for thickness of contents (with shock-absorbing properties B65D 81/03; letter-cards B42D 15/00)

References relevant to classification in this group

This subclass/group does not cover:

Making mailing envelopes	**B31B23/00K**
Carbon paper transfer	B41L 11/00
Envelopes having string handles or a string hook	B65D 33/12
For records	B65D 85/544

Special rules of classification within this group

The use of available Indexing Codes is mandatory.

B65D 27/005

[N: Linings]

Definition statement

This subclass/group covers:

Illustrative example of subject matter classified in this group:

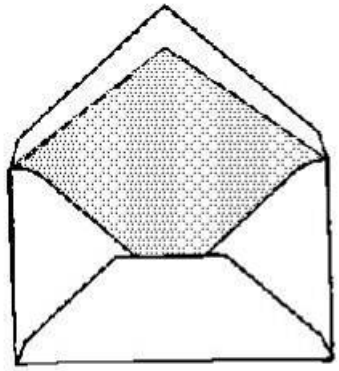

B65D 27/02

with stiffening inserts

Definition statement

This subclass/group covers:
Illustrative example of subject matter classified in this group:

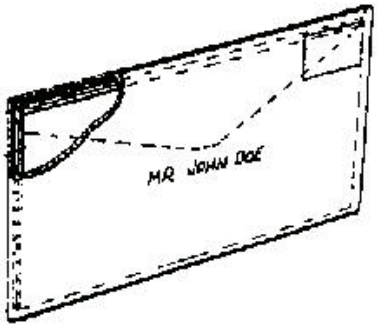

B65D 27/04

with apertures or windows for viewing contents

Definition statement

This subclass/group covers:
Illustrative example of subject matter classified in this group:

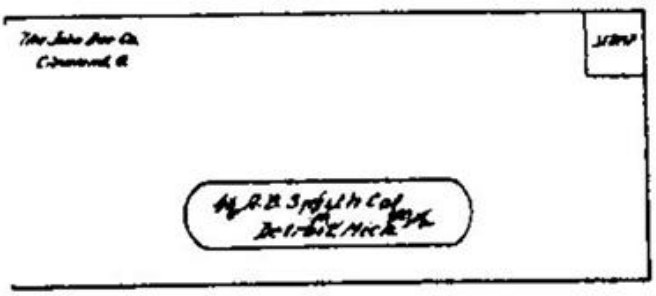

B65D 27/06

with provisions for repeated re-use

Definition statement

This subclass/group covers:
Illustrative example of subject matter classified in this group:

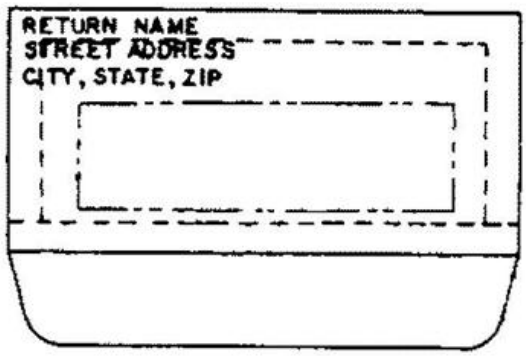

B65D 27/08

with two or more compartments

Definition statement

This subclass/group covers:
Illustrative example of subject matter classified in this group:

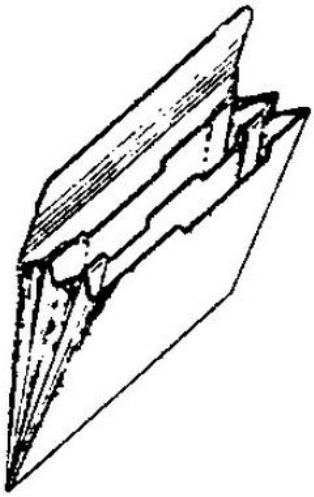

B65D 27/10

Chains of interconnected envelopes

Definition statement

This subclass/group covers:
Illustrative example of subject matter classified in this group:

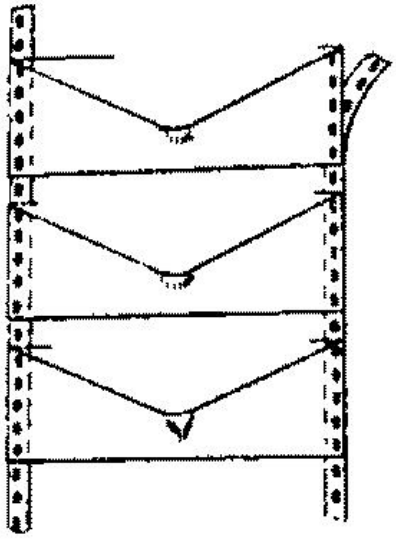

References relevant to classification in this group

This subclass/group does not cover:

Mailers and other chain forms	B42D

B65D 27/14

using adhesive applied to integral parts, e.g. flaps

Definition statement

This subclass/group covers:
Illustrative example of subject matter classified in this group:

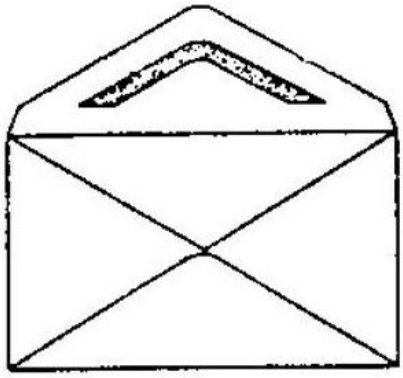

B65D 27/16

using pressure-sensitive adhesive

Definition statement

This subclass/group covers:
Illustrative example of subject matter classified in this group:

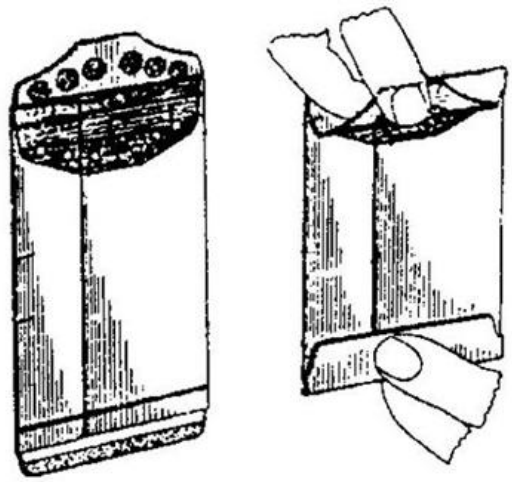

B65D 27/22

Tongue-and-slot or like closures; Tuck-in flaps

Definition statement

This subclass/group covers:
Illustrative example of subject matter classified in this group:

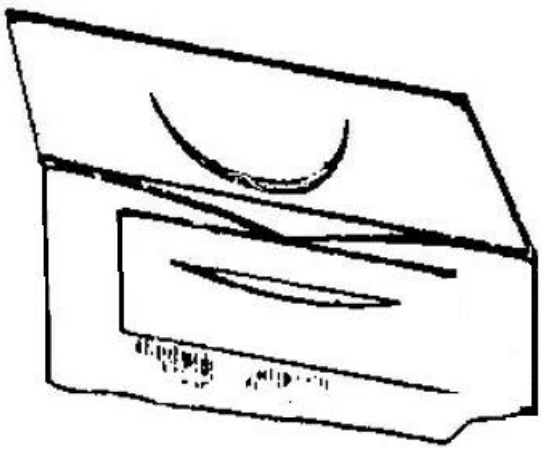

B65D 27/24

String closures

Definition statement

This subclass/group covers:
Illustrative example of subject matter classified in this group:

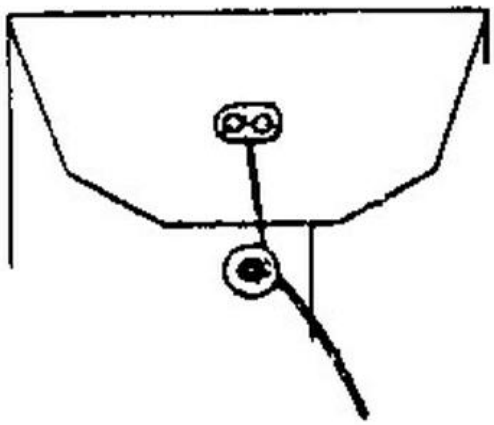

B65D 27/26

Deformable metallic elements

Definition statement

This subclass/group covers:
Illustrative example of subject matter classified in this group.

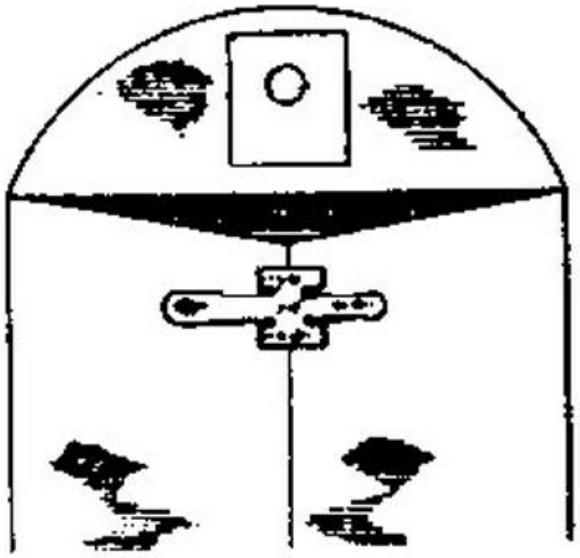

B65D 27/28

Applications of separate closing elements

Definition statement

This subclass/group covers:
Illustrative example of subject matter classified in this group:

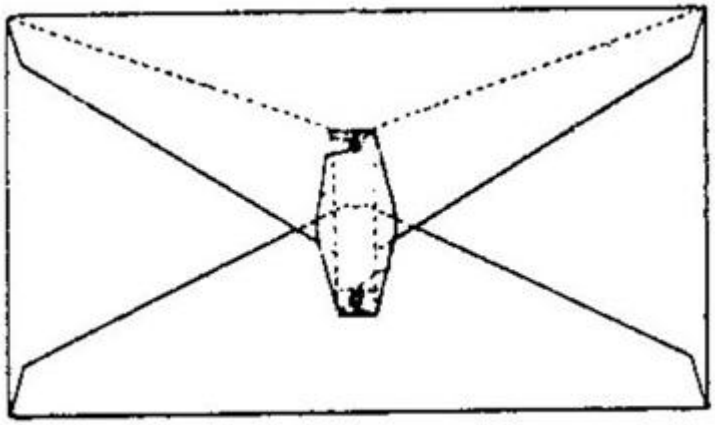

B65D 27/30

with special means for indicating unauthorised opening

Definition statement

This subclass/group covers:

Illustrative example of subject matter classified in this group:

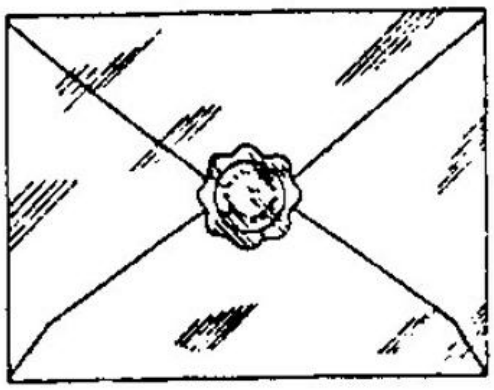

Informative references

Attention is drawn to the following places, which may be of interest for search:

Details of, or accessories for, sacks or bags with special means for indicating unauthorised opening	B65D 33/34

B65D 27/34

Lines of weakness

Definition statement

This subclass/group covers:
Illustrative example of subject matter classified in this group:

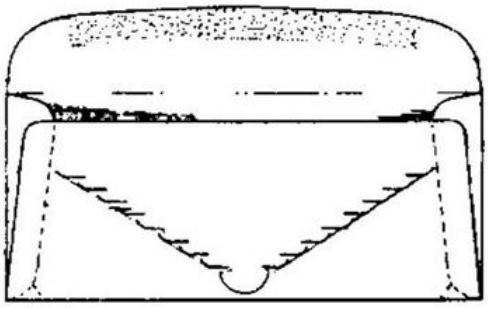

B65D 27/36

Finger openings, slots, or gripping tabs

Definition statement

This subclass/group covers:
Illustrative example of subject matter classified in this group:

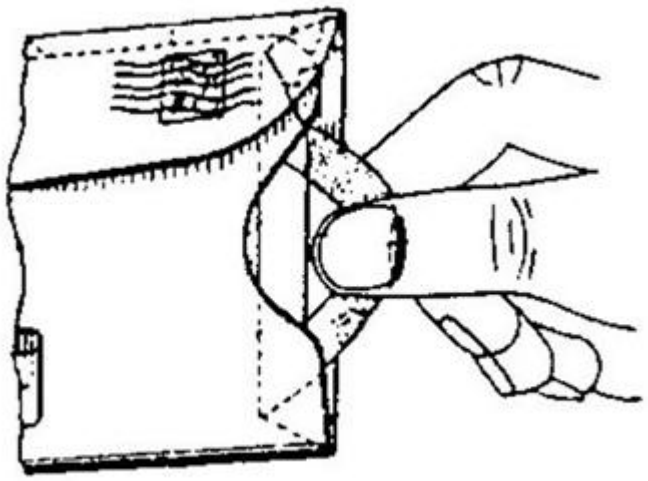

B65D 27/38

Tearing-strings or -strips

Definition statement

This subclass/group covers:
Illustrative example of subject matter classified in this group:

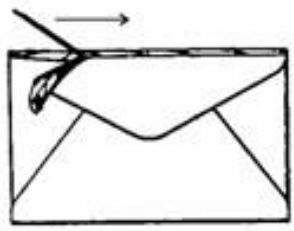

Informative references

Attention is drawn to the following places, which may be of interest for search:

Inserted or applied tearing-strings or like flexible elements	B65D 75/66
Tearing-strings or like flexible elements	B65D 77/32

B65D 29/00

Sacks or like containers made of fabrics; Flexible containers of open-work, e.g. net-like construction

Definition statement

This subclass/group covers:

Illustrative example of subject matter classified in this group:



References relevant to classification in this group

This subclass/group does not cover:

Postal bags with safety closure	B65D 77/185
Shopping nets	A45C 3/04

B65D 29/02

Sacks with laminated or multiple walls

Definition statement

This subclass/group covers:

Illustrative example of subject matter classified in this group:



B65D 29/04

Net-like containers made of plastics material

Definition statement

This subclass/group covers:
Illustrative example of subject matter classified in this group:

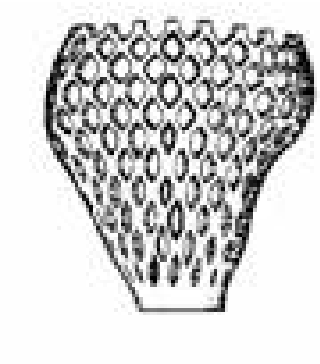

References relevant to classification in this group

This subclass/group does not cover:
Net-like covers for bottles B65D 23/0892

Informative references

Attention is drawn to the following places, which may be of interest for search:

Baskets or like containers of skeleton or apertured construction	B65D 1/38
Containers of skeleton or apertured construction, e.g. baskets or carriers made up of interconnected spaced bands, rods, or strings	B65D 11/14

B65D 31/00

Bags or like containers made of paper and having structural provision for thickness of contents [N: (with shock-absorbing properties B65D 81/03)]

References relevant to classification in this group

This subclass/group does not cover:

Tobacco pouches	A24F 23/02

Travelling bags	A45C
Manufacture of bags	B31B
Standing pouches	B65D 75/008
Flexible large bags	B65D 88/16
Laundry bags	D06F 95/002
Bags for picking up excrement from public places	E01H 1/1206

B65D 31/005

[N: by folding a single blank to U-shape to form the base of the bag and opposite sides of the body-portion, the remaining sides being formed by extensions of one or more of these opposite sides (cartons B65D 5/18)]

Definition statement

This subclass/group covers:

Illustrative example of subject matter classified in this group:

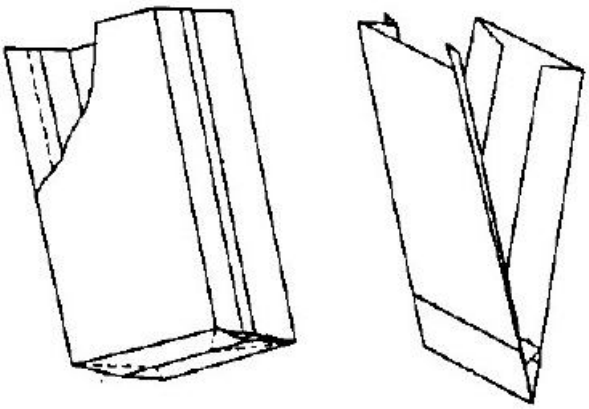

B65D 31/02

with laminated walls

Definition statement

This subclass/group covers:

Illustrative example of subject matter classified in this group:

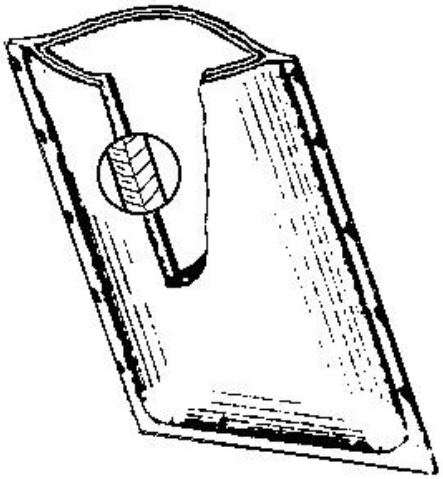

B65D 31/04

with multiple walls [N: (B65D 81/3881 takes precedence; for shock absorbing purposes B65D 81/03)]

Definition statement

This subclass/group covers:

Illustrative example of subject matter classified in this group:

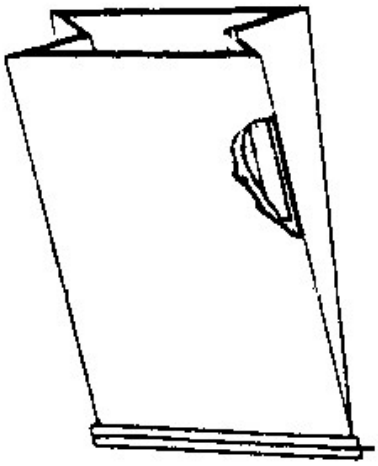

References relevant to classification in this group

This subclass/group does not cover:

Containers, packaging elements, or packages with thermal insulation formed with double walls	B65D 81/3881

Informative references

Attention is drawn to the following places, which may be of interest for search:

Bags or like containers made of paper with laminated walls	B65D 31/02

B65D 31/06

with rigid end walls

Definition statement

This subclass/group covers:

Illustrative example of subject matter classified in this group:

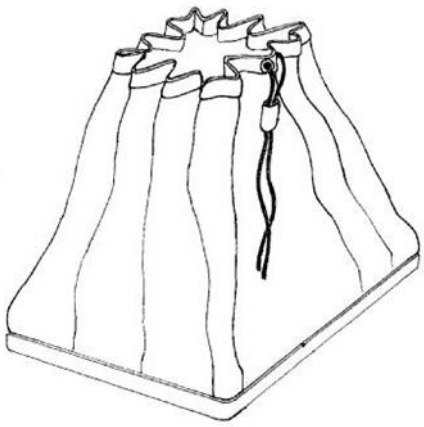

References relevant to classification in this group

This subclass/group does not cover:

Rigid end bases for standing pouches	B65D 75/008

Informative references

Attention is drawn to the following places, which may be of interest for search:

Local reinforcements or stiffening inserts, e.g. wires, strings, strips, frames	B65D 33/02

B65D 31/08

with block bottoms

Definition statement

This subclass/group covers:
Illustrative example of subject matter classified in this group:

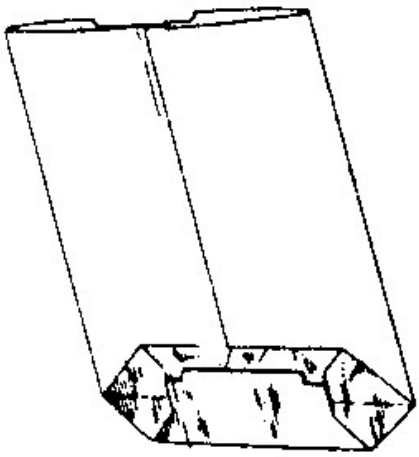

B65D 31/10

with gusseted sides

Definition statement

This subclass/group covers:
Illustrative example of subject matter classified in this group:

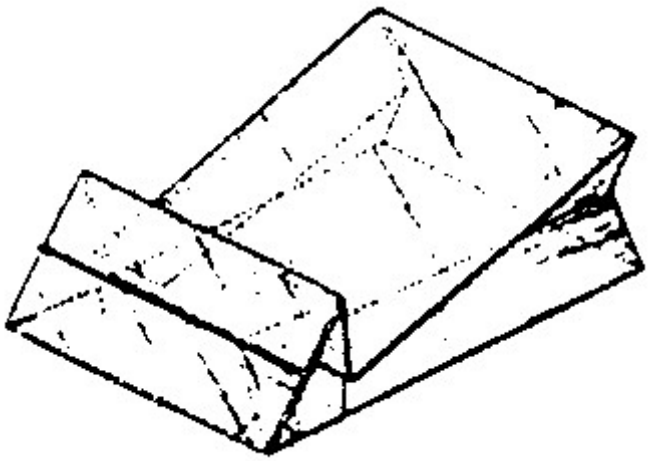

B65D 31/12

with two or more compartments

Definition statement

This subclass/group covers:
Illustrative example of subject matter classified in this group:

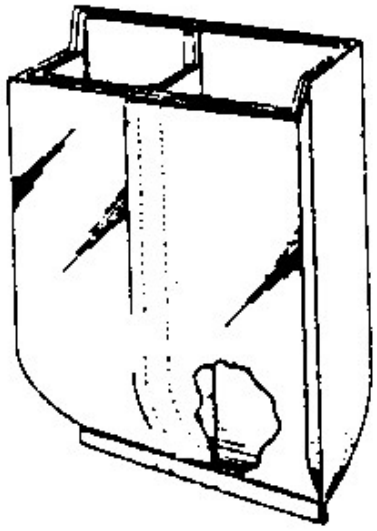

Informative references

Attention is drawn to the following places, which may be of interest for search:

Materials, e.g. different materials, enclosed in separate compartments formed during filling of a single container	B65D 77/08

B65D 31/14

[N: IPC2] Valve bags, [N: i.e. with valves for filling]

References relevant to classification in this group

This subclass/group does not cover:

Flexible pressure relief valves	B65D 77/225
Venting means	B65D 2205/00

B65D 31/142

[N: the filling port being formed by folding a flap connected to a side, e.g. block bottoms]

Definition statement

This subclass/group covers:
Illustrative example of subject matter classified in this group:

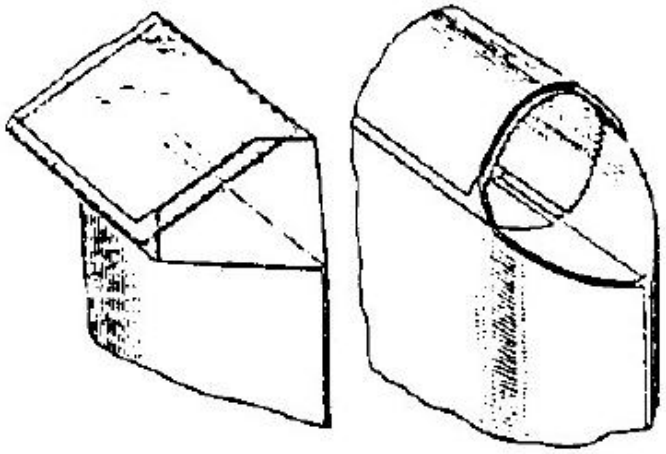

References relevant to classification in this group

This subclass/group does not cover:

Flexible pressure relief valves	B65D 77/225
Venting means	B65D 2205/00

B65D 31/145

[N: the filling port being provided in a flat upper sealing-edge]

Definition statement

This subclass/group covers:
Illustrative example of subject matter classified in this group:

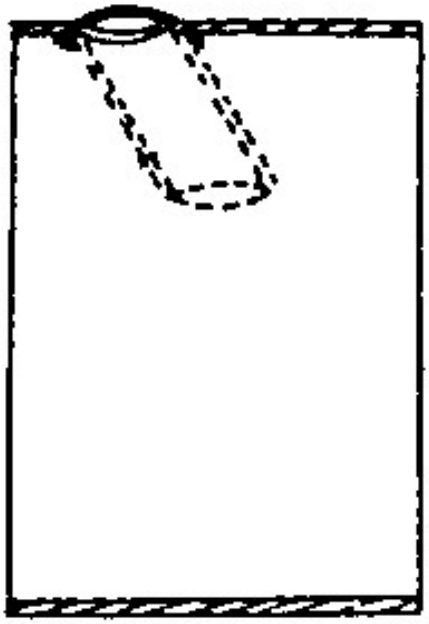

References relevant to classification in this group

This subclass/group does not cover:

Flexible pressure relief valves	B65D 77/225
Venting means	B65D 2205/00

B65D 31/147

[N: the filling port being provided in a side wall]

Definition statement

This subclass/group covers:
Illustrative example of subject matter classified in this group:

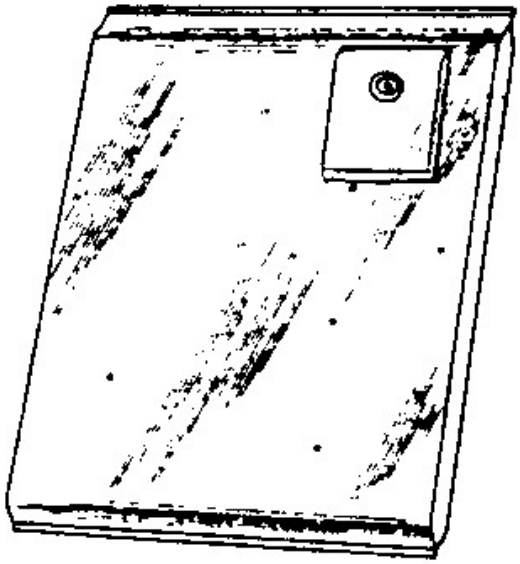

References relevant to classification in this group

This subclass/group does not cover:

Flexible pressure relief valves	B65D 77/225
Venting means	B65D 2205/00

B65D 31/16

[N: IPC2] of special shape

Definition statement

This subclass/group covers:
Illustrative example of subject matter classified in this group:

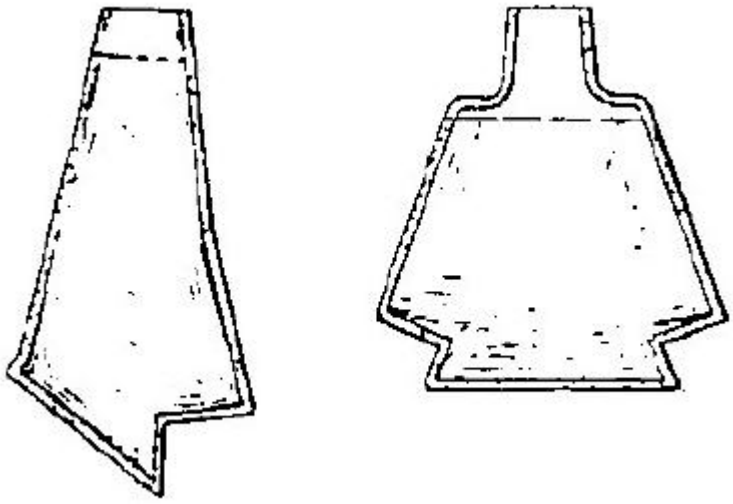

B65D 31/18

Triangular or conical bags

Definition statement

This subclass/group covers:
Illustrative example of subject matter classified in this group:

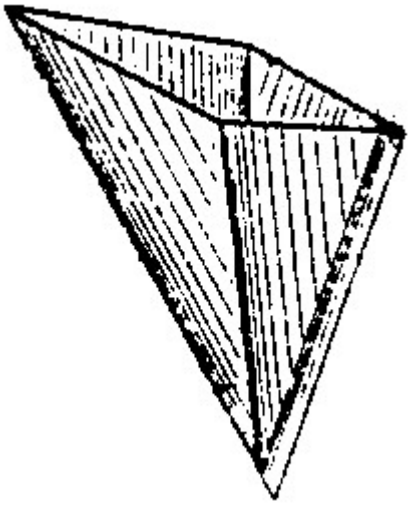

B65D 33/00

Details of, or accessories for, sacks or bags

References relevant to classification in this group

This subclass/group does not cover:

Bags for the cultivation of mushrooms	A01G 1/046

Bags specially for adapted for shopping trolleys	**B62B3/18B**
Pressure relief valves	B65D 77/225, B65D 81/2038
Bags for microbiological cultures	C12M 1/16

Informative references

Attention is drawn to the following places, which may be of interest for search:

Containers, packaging elements, or packages adapted to be used for non-packaging purposes after removal of contents	B65D 81/36

B65D 33/001

[N: Blocks, stacks or like assemblies of bags]

Definition statement

This subclass/group covers:

Illustrative example of subject matter classified in this group:

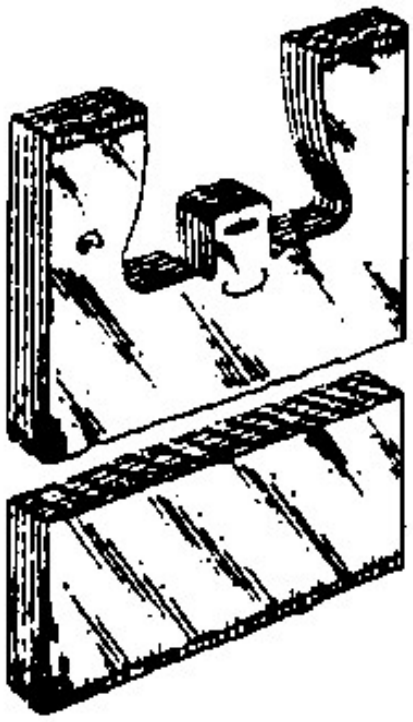

References relevant to classification in this group

This subclass/group does not cover:

Shopping bags or carton-dispensing systems	A47F 9/042
Shopping bag holders	A47F 13/085
Feeding individual bags from piles or magazines	B65B 43/14

Informative references

Attention is drawn to the following places, which may be of interest for search:

Containers or packages with special means for dispensing thin flat articles in succession	B65D 83/08

B65D 33/002

[N: Rolls, strips or like assemblies of bags]

Definition statement

This subclass/group covers:

Illustrative example of subject matter classified in this group:

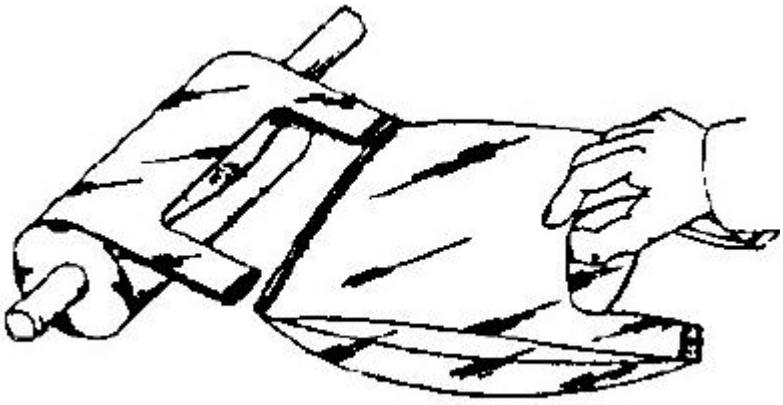

Informative references

Attention is drawn to the following places, which may be of interest for search:

Containers or packages with special means for dispensing thin flat articles in succession	B65D 83/08

B65D 33/004

[N: Information or decoration elements, e.g. level indicators, detachable tabs or coupons]

Definition statement

This subclass/group covers:

Illustrative example of subject matter classified in this group:

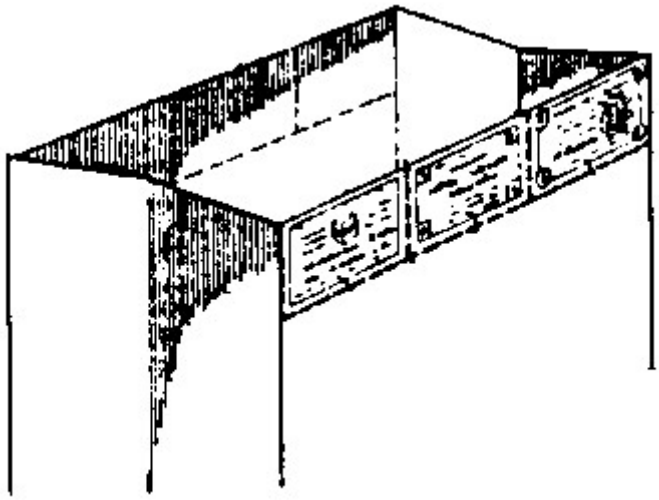

References relevant to classification in this group

This subclass/group does not cover:

Decorative ribbons or rosettes	B65D 67/00

Informative references

Attention is drawn to the following places, which may be of interest for search:

Information or decoration elements, e.g. content indicators, or for mailing	B65D 5/4212
Means for the attachments of tags	B65D 23/14
Means for the attachment of labels, cards, coupons or the like	B65D 25/205
The inserts being located with a pouch or envelope attached to the exterior of the packages	B65D 75/545

B65D 33/005

[N: Anti-slip or anti-skid bags, e.g. bags provided with anti-slip coating, ribs, strips]

Definition statement

This subclass/group covers:

Illustrative example of subject matter classified in this group:

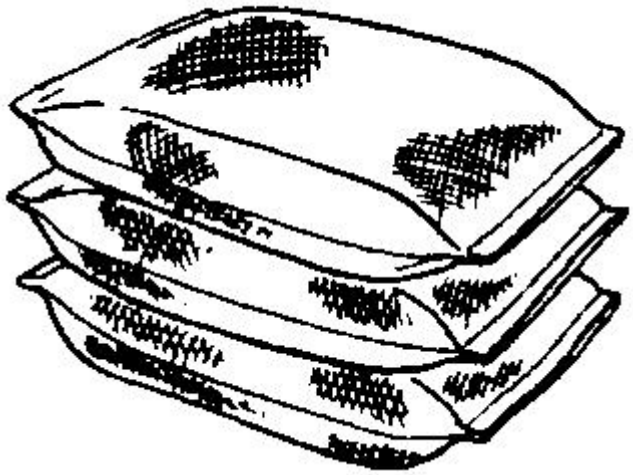

References relevant to classification in this group

This subclass/group does not cover:

Anti-slip separators for articles packaged in stacks or groups	B65D 57/00

B65D 33/007

[N: for facilitating the separation of the two walls, e.g. walls of inequal height, tabs; for maintaining the mouth of the sack or bag open]

Definition statement

This subclass/group covers:

Illustrative example of subject matter classified in this group:

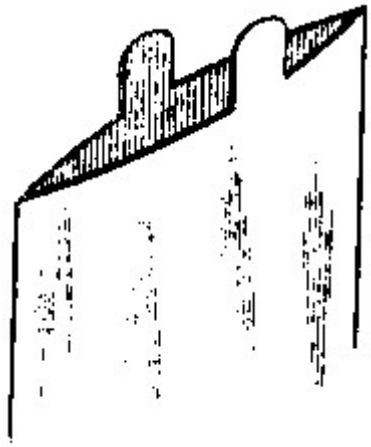

References relevant to classification in this group

This subclass/group does not cover:

Two resilient self-closing bands	B65D 33/30

B65D 33/008

[N: Individual filled bags or pouches connected together (B65D 33/001, B65D 33/002 take precedence)]

Definition statement

This subclass/group covers:

Illustrative example of subject matter classified in this group:

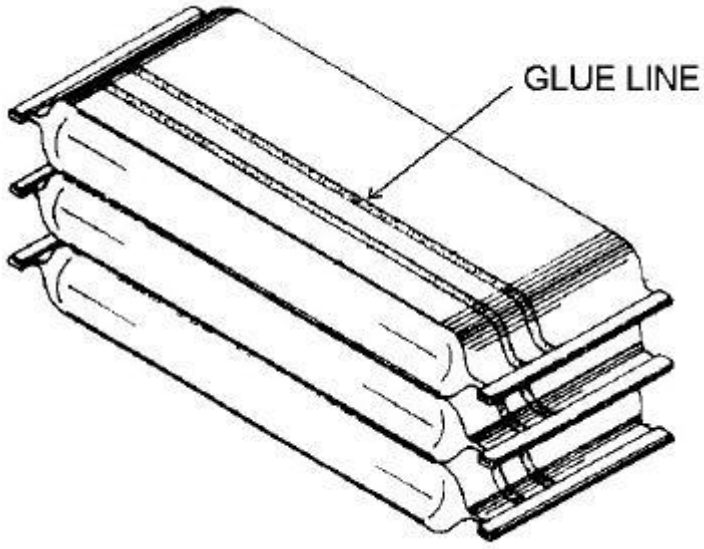

References relevant to classification in this group

This subclass/group does not cover:

Blocks, stacks or like assemblies of bags	B65D 33/001
Rolls, strips or like assemblies of bags	B65D 33/002

Informative references

Attention is drawn to the following places, which may be of interest for search:

Flexible containers having several compartments	B65D 81/3261

B65D 33/01

Ventilation or drainage of bags, [N: e.g. disaligned apertures, labyrinth welds (pressure-relief valves comprising at least one elastic element B65D 77/225; connection of valves to inflatable elastic bodies B60C 29/00)]

Definition statement

This subclass/group covers:

Illustrative example of subject matter classified in this group:

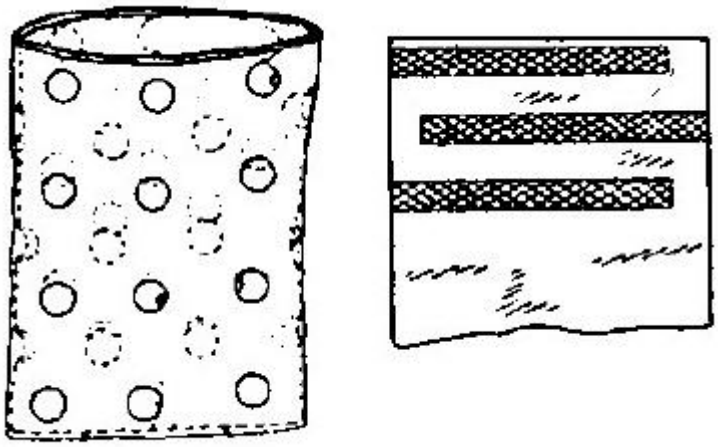

Informative references

Attention is drawn to the following places, which may be of interest for search:

Venting means	B65D 2205/00

B65D 33/02

Local reinforcements or stiffening inserts, e.g. wires, strings, strips, frames [N: (B65D 33/007 takes precedence)]

Definition statement

This subclass/group covers:

Illustrative example of subject matter classified in this group:

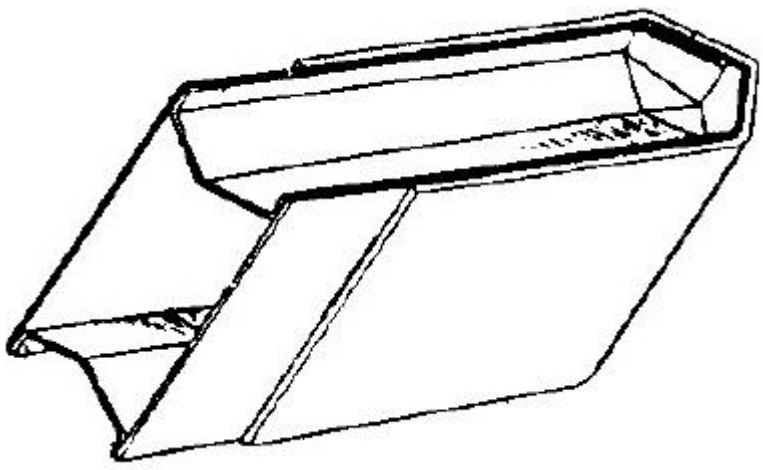

References relevant to classification in this group

This subclass/group does not cover:

For maintaining the mouth of the bag open	B65D 33/007
Around a hand hole	B65D 33/08
Internal frames	B65D 57/00
External frames	B65D 61/00

B65D 33/04

Windows or other apertures, e.g. for viewing contents [N: (ventilation apertures B65D 33/01; windows for level indication B65D 33/004)]

Definition statement

This subclass/group covers:

Illustrative example of subject matter classified in this group:

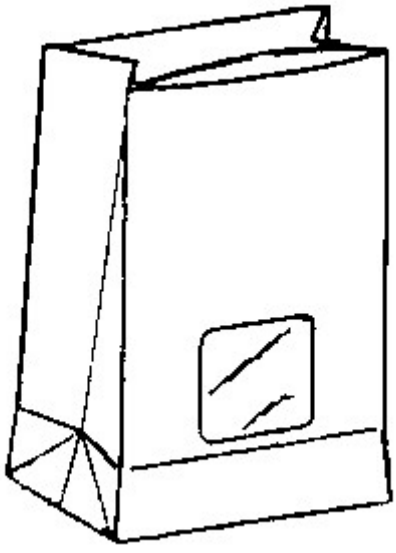

Informative references

Attention is drawn to the following places, which may be of interest for search:

Wrappers or flexible covers with	B65D 65/18

some areas transparent and others opaque	
Inspection openings or windows	B65D 75/522
Means or constructions for testing or controlling the contents	B65D 2201/00

B65D 33/06

Handles [N: (forming part of the closing arrangement B65D 33/16)]

Definition statement

This subclass/group covers:

Illustrative example of subject matter classified in this group:

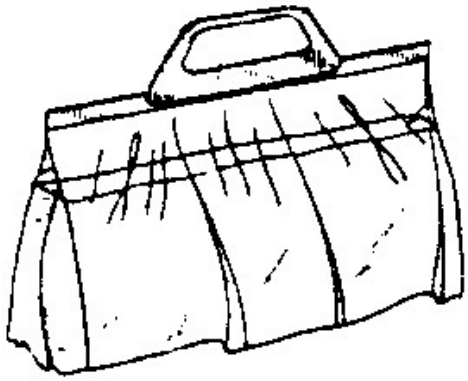

References relevant to classification in this group

This subclass/group does not cover:

Loose handles for carrying purposes	A45F 5/10

B65D 33/065

[N: Integral handles (B65D 33/08 takes precedence)]

Definition statement

This subclass/group covers:

Illustrative example of subject matter classified in this group:

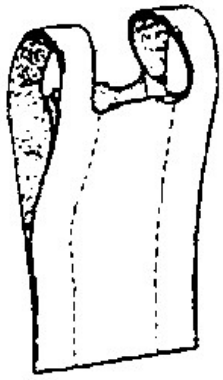

References relevant to classification in this group

This subclass/group does not cover:

Hand holes	B65D 33/08

B65D 33/08

Hand holes

Definition statement

This subclass/group covers:
Illustrative example of subject matter classified in this group:

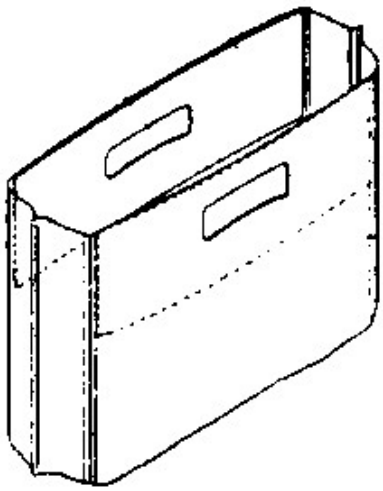

B65D 33/10

formed of similar material to that used for the bag

Definition statement

This subclass/group covers:
Illustrative example of subject matter classified in this group:

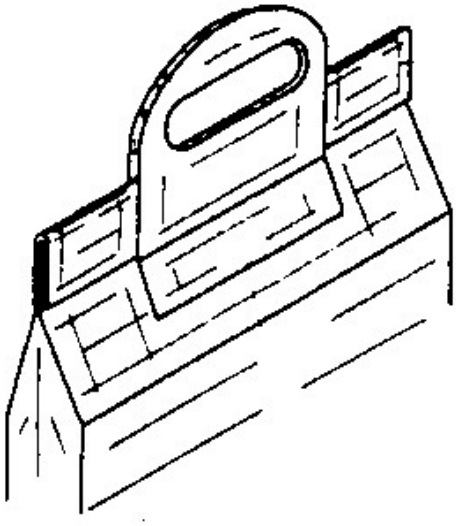

References relevant to classification in this group

This subclass/group does not cover:

For packages in wrappers	B65D 75/56

B65D 33/105

[N: U-shaped]

Definition statement

This subclass/group covers:
Illustrative example of subject matter classified in this group:

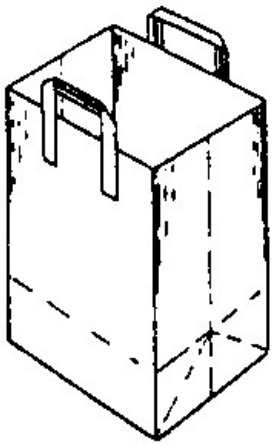

B65D 33/12

String handles

Definition statement

This subclass/group covers:
Illustrative example of subject matter classified in this group:

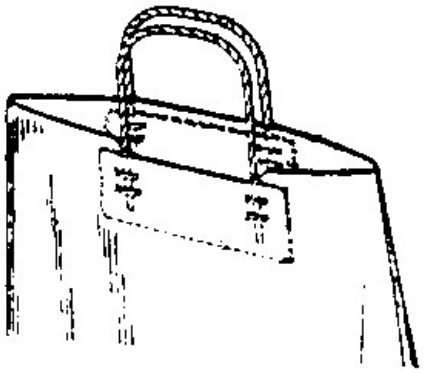

B65D 33/14

Suspension means (handles B65D 33/06)

Definition statement

This subclass/group covers:
Illustrative example of subject matter classified in this group:

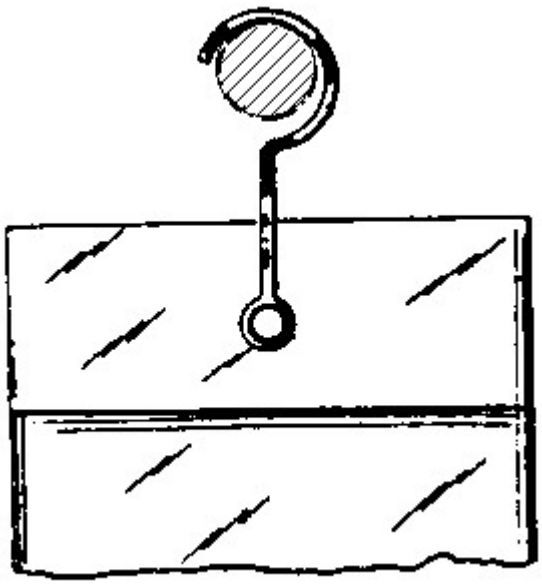

References relevant to classification in this group

This subclass/group does not cover:

Devices for suspending handbags from tables, chairs or the like	A47G 29/083
Sack holders, i.e. stands or frames with means for supporting sacks in the open position to facilitate filling with articles or materials	B65B 67/12
Large flexible containers with lifting loops or similar	B65D 88/16

Informative references

Attention is drawn to the following places, which may be of interest for search:

A pair of interconnecting rigid strips made of plastic material	B65D 33/1683
Turn-over flaps co-operating with a separate handle or suspension	B65D 33/246

B65D 33/1608

[N: Integral flaps for tying above the bag]

Definition statement

This subclass/group covers:
Illustrative example of subject matter classified in this group:

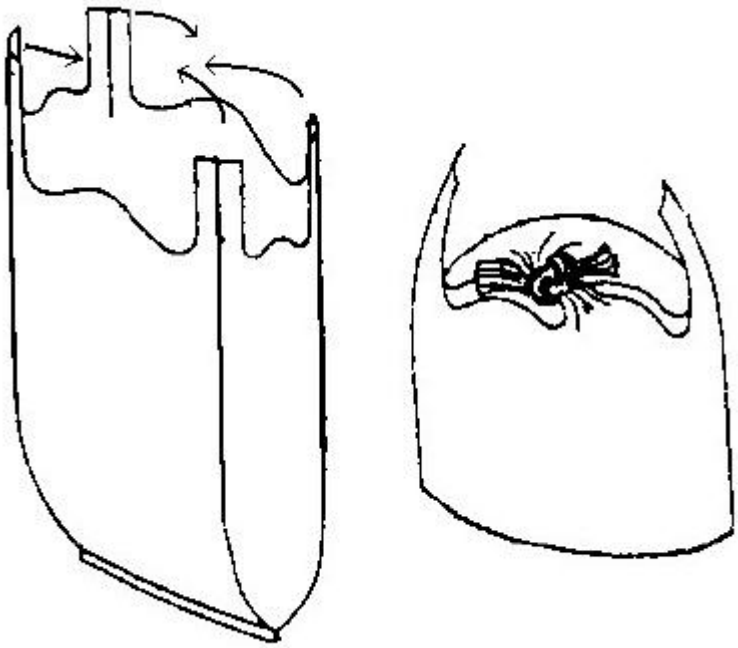

B65D 33/1616

[N: Elements constricting the neck of the bag (hinged clips B65D 33/1675)]

References relevant to classification in this group

This subclass/group does not cover:

Applying separate sealing or securing members, e.g. clips, to bags	B65B 51/04
Releasable fastenings clips	F16B 2/20
Tag tickets, or similar identification or indication means to be fastened or secured by the material of the label itself	G09F 3/04

B65D 33/1625

[N: Small plates or the like made of one piece and presenting slits or a central aperture to jam the neck of the bag]

Definition statement

This subclass/group covers:

Illustrative example of subject matter classified in this group:

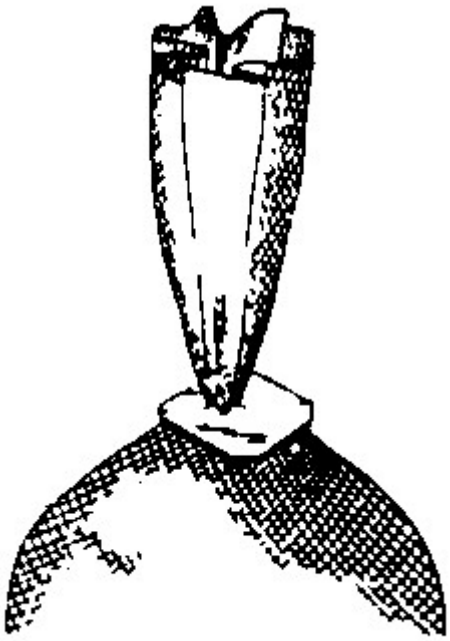

References relevant to classification in this group

This subclass/group does not cover:

Devices for applying separate sealing or securing members, e.g. clips, to bags	B65B 51/04
Tag tickets, or similar identification or indication means to be fastened or secured by the material of the label itself	G09F 3/04

B65D 33/1633

[N: Closed rings maintaining the constricted neck around an element, e.g. used as a handle or suspension means, with the

element integral or non-integral with the ring]

Definition statement

This subclass/group covers:
Illustrative example of subject matter classified in this group:

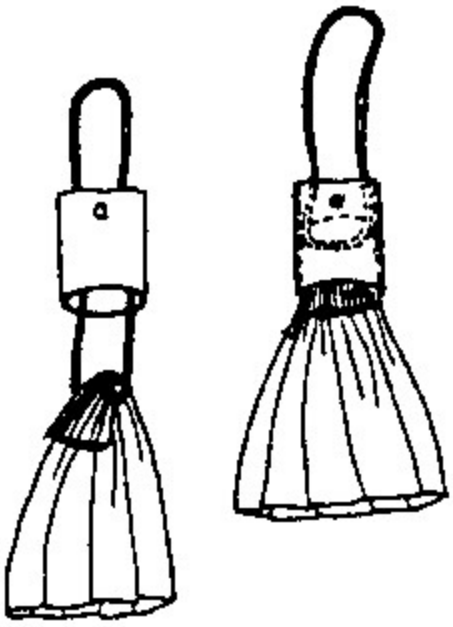

References relevant to classification in this group

This subclass/group does not cover:

Devices for applying separate sealing or securing members, e.g. clips, to bags	B65B 51/04

B65D 33/1641

[N: Staples, clips or clamps made of metal]

Definition statement

This subclass/group covers:
Illustrative example of subject matter classified in this group:

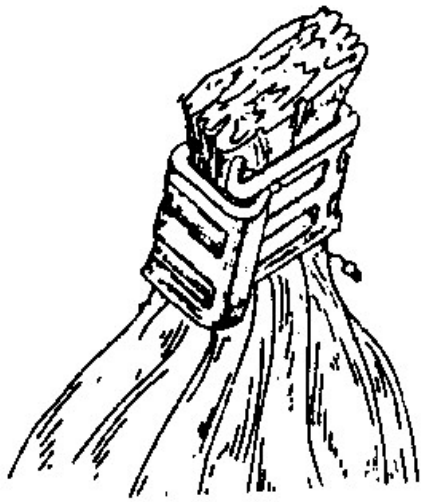

References relevant to classification in this group

This subclass/group does not cover:

Devices for applying separate sealing or securing members, e.g. clips, to bags	B65B 51/04
For clamps made of metal	B65D 63/06, B65D 63/14
Releasable fastenings clips	F16B 2/20

B65D 33/165

[N: Flexible elongated elements integral with or attached to bags or sacks (draw closures B65D 33/28); Fastening thereof to the bag before closing]

Definition statement

This subclass/group covers:

Illustrative example of subject matter classified in this group:

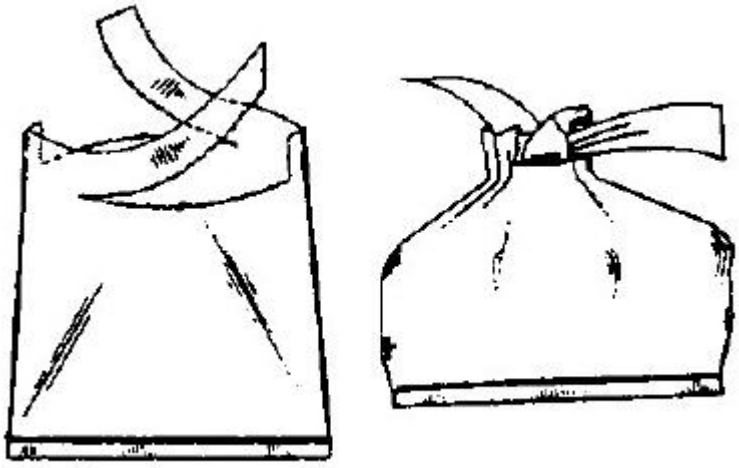

References relevant to classification in this group

This subclass/group does not cover:

Devices for applying separate sealing or securing members, e.g. clips, to bags	B65B 51/04
Deformable or resilient metal or like strips or bands	B65D 33/30
Flexible elements per se	B65D 63/00

B65D 33/1658

[N: Elements for flattening or folding the mouth portion (B65D 33/30 takes precedence)]

References relevant to classification in this group

This subclass/group does not cover:

Deformable or resilient metal or like strips or bands	B65D 33/30

Informative references

Attention is drawn to the following places, which may be of interest for search:

Flexible containers having several compartments separated by a	B65D 81/3266

common rupturable seal	

B65D 33/1666

[N: Slitted tubes with or without a core; U-shaped clips made of one piece]

Definition statement

This subclass/group covers:
Illustrative example of subject matter classified in this group:

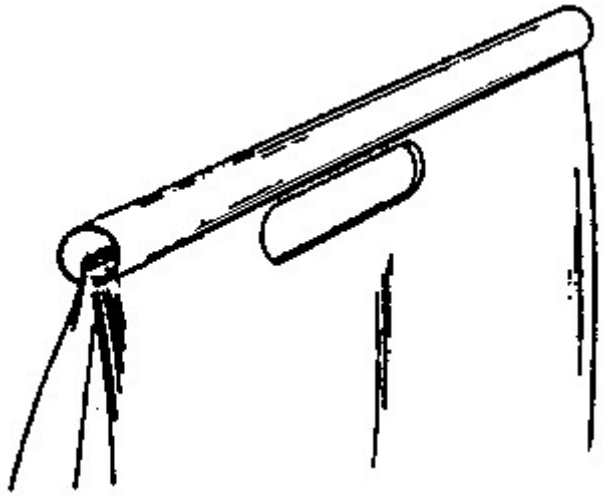

B65D 33/1675

[N: Hinged clips]

Definition statement

This subclass/group covers:
Illustrative example of subject matter classified in this group:

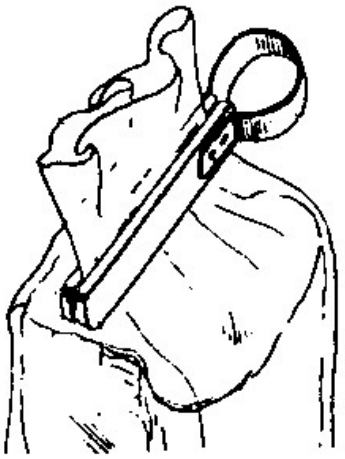

References relevant to classification in this group

This subclass/group does not cover:

Clothes pegs	D06F 55/00
Releasable fastenings clips	F16B 2/20

B65D 33/1683

[N: A pair of interconnecting rigid strips made of plastic material, e.g. one or both being provided with a handle or suspension means]

Definition statement

This subclass/group covers:

Illustrative example of subject matter classified in this group:

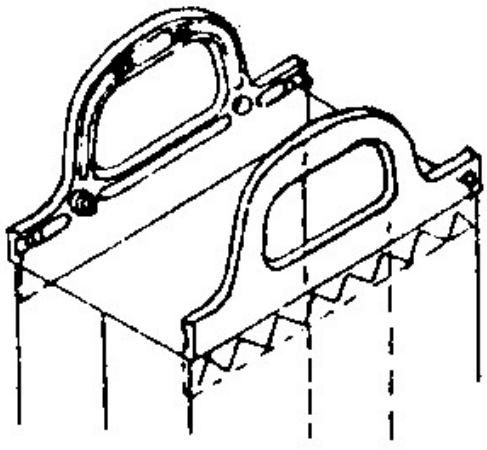

Informative references

Attention is drawn to the following places, which may be of interest for search:

Riveting; Dovetailing; Screwing; using press buttons or slide fasteners	B65D 33/25

B65D 33/1691

[N: using adhesive applied to attached closure elements]

Definition statement

This subclass/group covers:

Illustrative example of subject matter classified in this group:

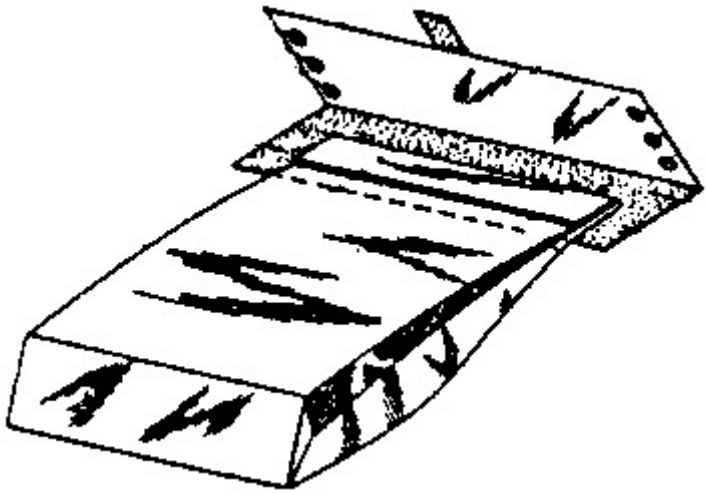

Informative references

Attention is drawn to the following places, which may be of interest for search:

Using adhesive applied to integral parts, e.g. to flaps	B65D 33/18

B65D 33/18

using adhesive applied to integral parts, e.g. to flaps (of envelopes B65D 27/14)

Definition statement

This subclass/group covers:
Illustrative example of subject matter classified in this group:

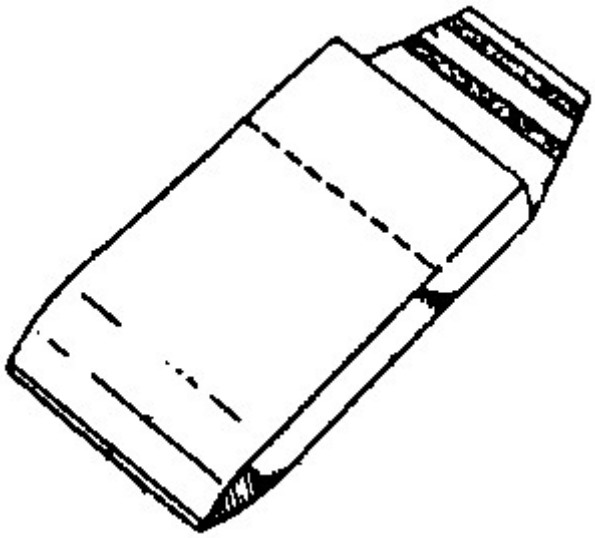

B65D 33/20

using pressure-sensitive adhesive

Definition statement

This subclass/group covers:
Illustrative example of subject matter classified in this group:

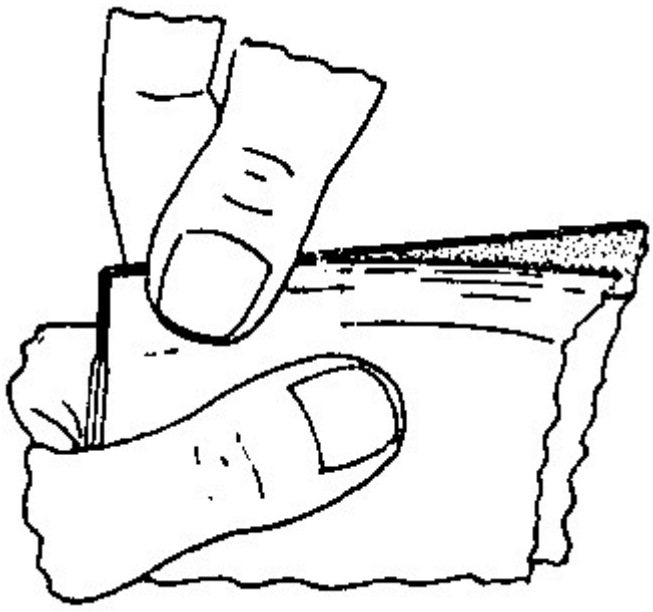

B65D 33/22

using heat-activatable adhesive

Definition statement

This subclass/group covers:

Illustrative example of subject matter classified in this group:

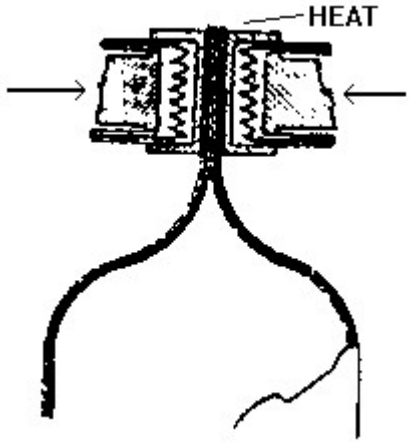

B65D 33/24

using self-locking integral or attached closure elements, e.g. flaps (B65D 33/25 takes precedence)

Definition statement

This subclass/group covers:

Illustrative example of subject matter classified in this group:

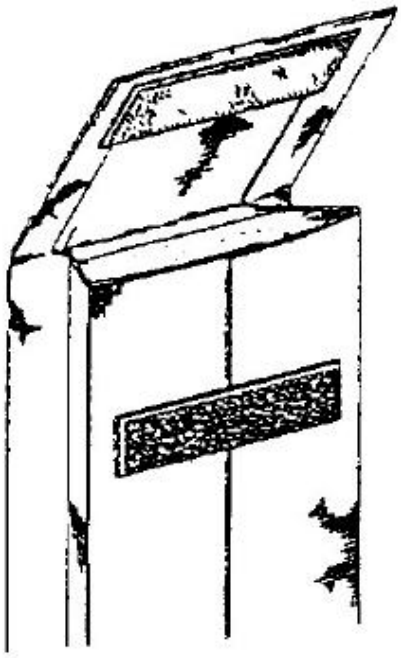

References relevant to classification in this group

This subclass/group does not cover:

Riveting; Dovetailing; Screwing; using press buttons or slide fasteners	B65D 33/25
Force of static electricity; two resilient self-closing bands	B65D 33/30
Velcro bands	B65D 2313/02
Magnetic	B65D 2313/04

Special rules of classification within this group

The use of available Indexing Codes is mandatory.

B65D 33/243

[N: Combination of flaps, slits, tongues or apertures, e.g. apertures serving as hand or finger holes]

Definition statement

This subclass/group covers:
Illustrative example of subject matter classified in this group:

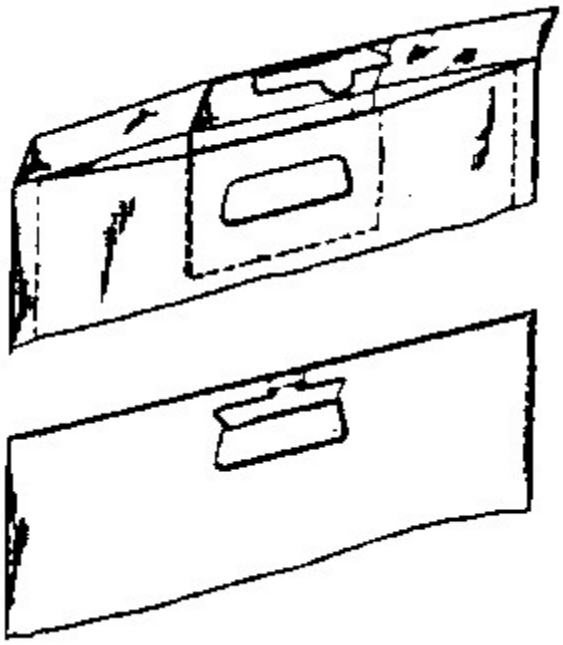

B65D 33/246

[N: Turn-over flaps co-operating with a separate handle or suspension means]

Definition statement

This subclass/group covers:
Illustrative example of subject matter classified in this group:

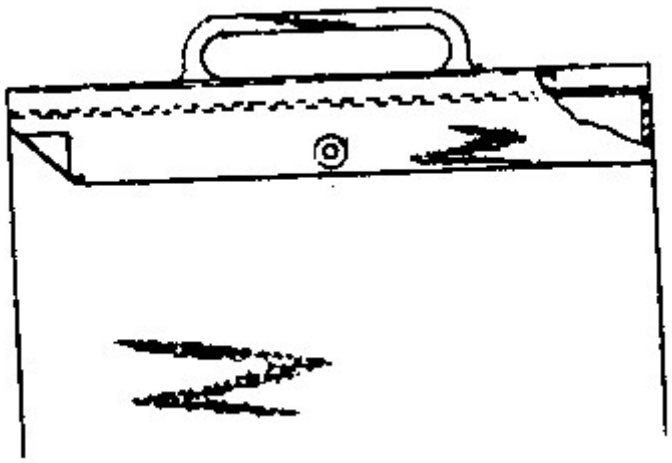

B65D 33/25

Riveting; Dovetailing; Screwing; using press buttons or slide fasteners [N: (slide fasteners per se A44B 19/00)]

Informative references

Attention is drawn to the following places, which may be of interest for search:

A pair of interconnecting rigid strips made of plastic material	B65D 33/1683
Body construction with linings or inserts for keeping body in rolled state after partial expulsion of contents	B65D 35/18
Body construction with the tubular container being provided on its internal surfaces with press buttons or the like for maintaining the container in compressed state	B65D 35/247

B65D 33/2508

[N: using slide fasteners with interlocking members having a substantially uniform section throughout the length of the fastener and operated without a slider]

Definition statement

This subclass/group covers:

Illustrative example of subject matter classified in this group:

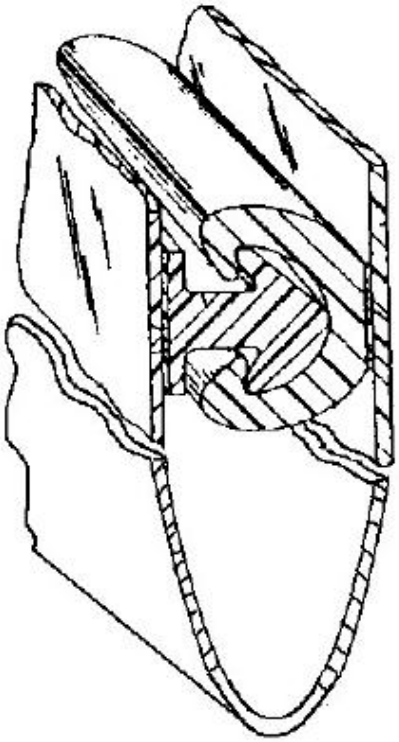

References relevant to classification in this group

This subclass/group does not cover:

Fasteners having a uniform section	A44B 19/16
Making of slide fasteners	B29D 5/10,**L29C587/00**
Making reclosable bags with interengaging elements	**B31B19/90C**
Applying profile strips to bags	B65B 61/188

B65D 33/2516

[N: comprising tamper-indicating means, e.g. located within the fastener]

Definition statement

This subclass/group covers:

Illustrative example of subject matter classified in this group:

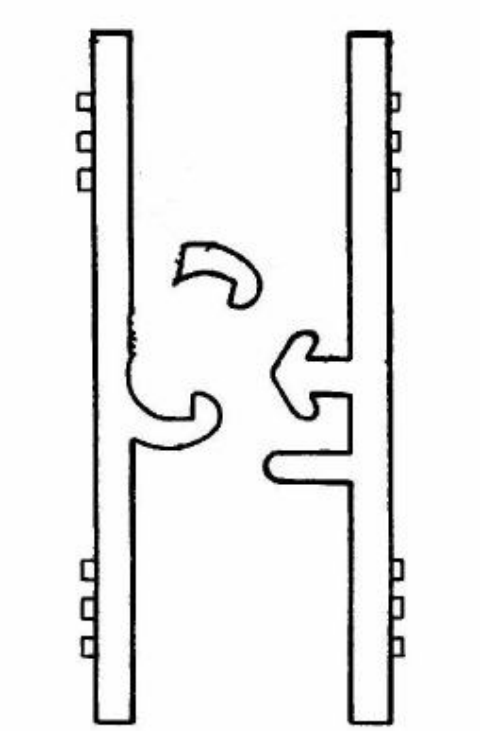

B65D 33/2525

[N: located between the fastener and the product compartment]

Definition statement

This subclass/group covers:

Illustrative example of subject matter classified in this group:

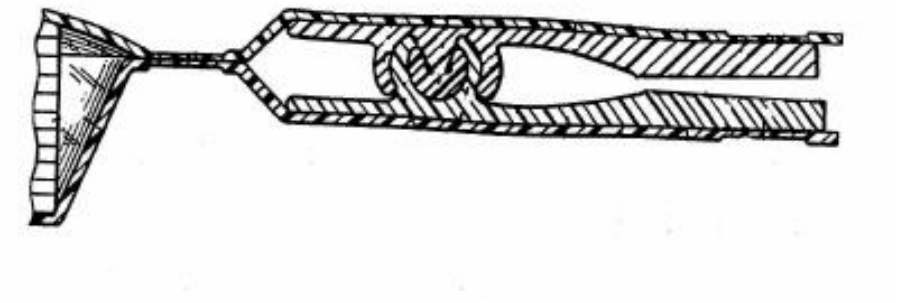

B65D 33/2533

[N: the slide fastener being located between the product compartment and the tamper indicating means]

Definition statement

This subclass/group covers:

Illustrative example of subject matter classified in this group:

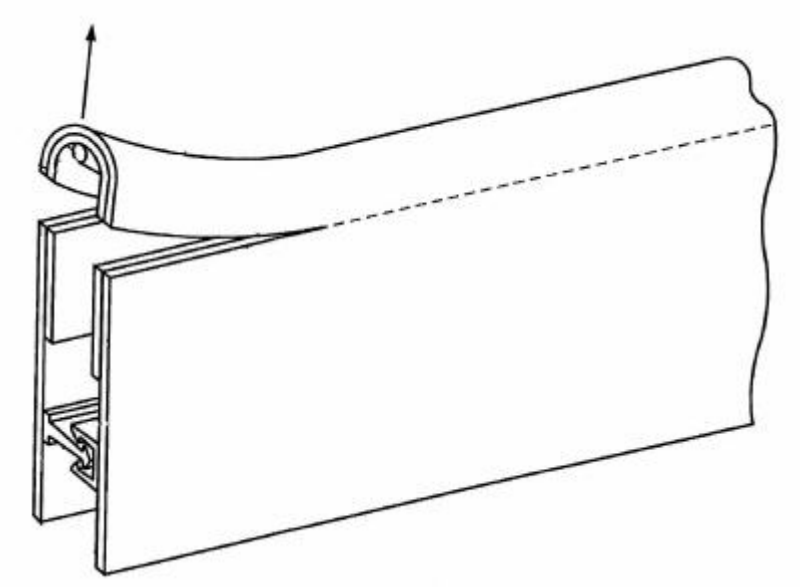

B65D 33/255

[N: being provided with special visual, audible or tactile indicating means, e.g. indicating proper engagement (B65D 33/2516 takes precedence)]

Definition statement

This subclass/group covers:

Illustrative example of subject matter classified in this group:

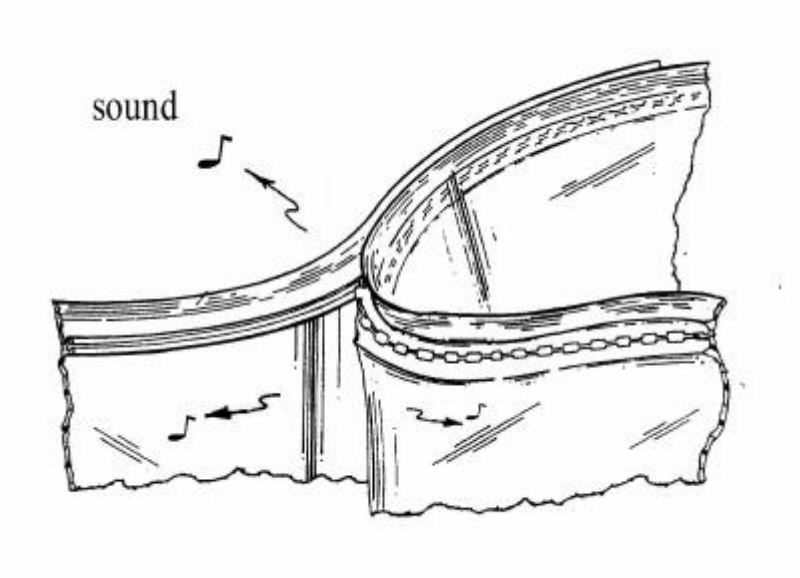

References relevant to classification in this group

This subclass/group does not cover:

Comprising tamper-indicating means	B65D 33/2516

Informative references

Attention is drawn to the following places, which may be of interest for search:

Audible olfactory or visual signalling means	B65D 2203/12

B65D 33/2558

[N: the slide fastener having a non-constant section throughout the length of the fastener, e.g. slightly undulated interlocking members or castellated stringers]

Definition statement

This subclass/group covers:

Illustrative example of subject matter classified in this group:

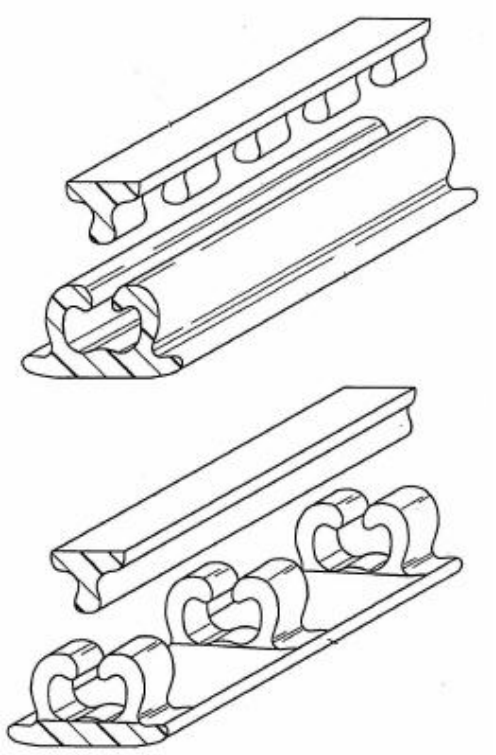

B65D 33/2566

[N: using two or more independently operable slide fasteners]

Definition statement

This subclass/group covers:

Illustrative example of subject matter classified in this group:

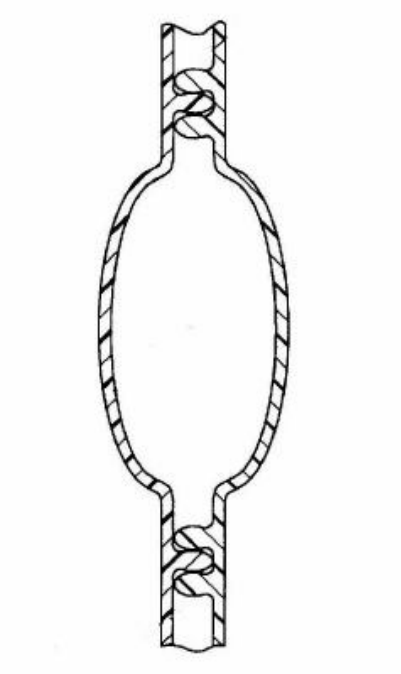

B65D 33/2575

[N: the slide fastener providing access to the bag through a bag wall, e.g. intended to be cut open by the consumer]

Definition statement

This subclass/group covers:

Illustrative example of subject matter classified in this group:

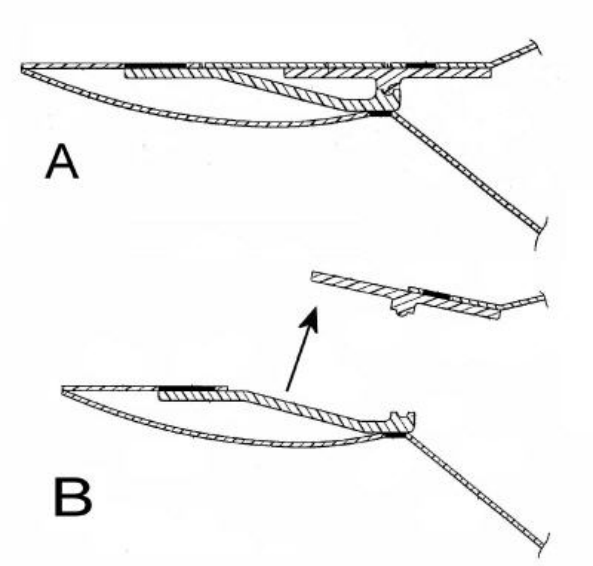

B65D 33/2583

[N: the slide fastener being attached to one wall only]

Definition statement

This subclass/group covers:
Illustrative example of subject matter classified in this group:

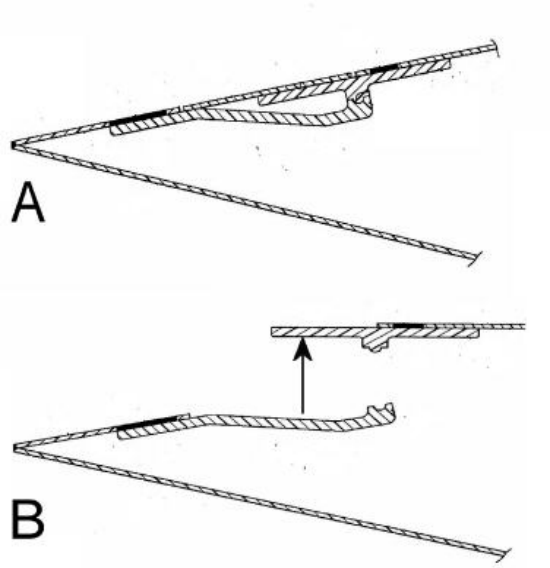

B65D 33/2591

[N: using slide fasteners with interlocking members having a substantially uniform section throughout the length of the fastener and operated with a slider]

Definition statement

This subclass/group covers:

Illustrative example of subject matter classified in this group:

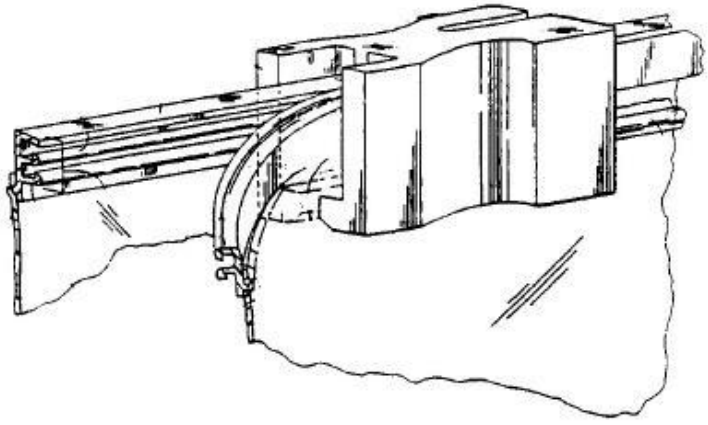

References relevant to classification in this group

This subclass/group does not cover:

Sliders per se	A44B 19/267

B65D 33/26

using staples or stitches [N: (B65D 33/1641 takes precedence)]

Definition statement

This subclass/group covers:

Illustrative example of subject matter classified in this group:

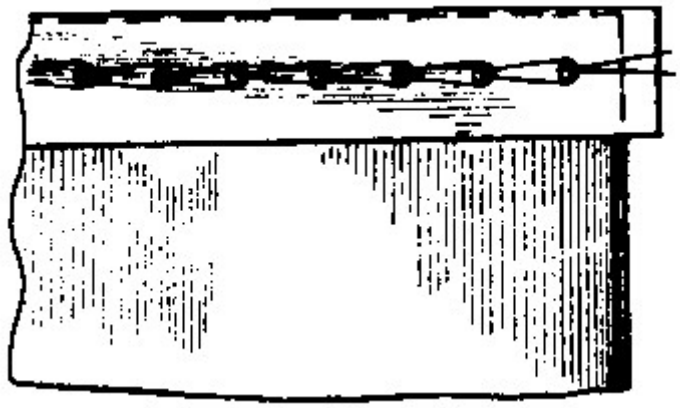

References relevant to classification in this group

This subclass/group does not cover:

Staples, clips or clamps made of metal	B65D 33/1641

B65D 33/28

Strings or strip-like closures, [N: i.e. draw closures]

Definition statement

This subclass/group covers:

Illustrative example of subject matter classified in this group:

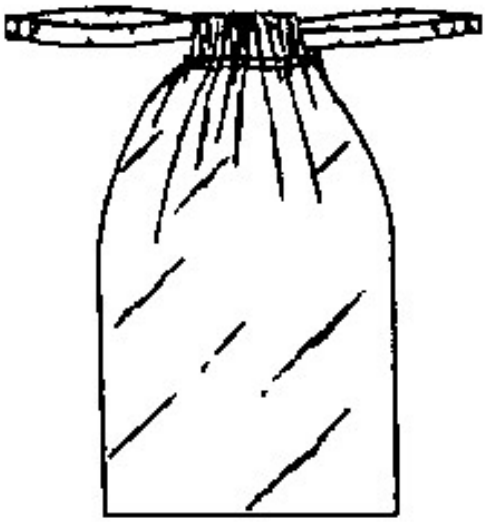

B65D 33/30

Deformable or resilient metal or like strips or bands [N: (B65D 33/1616 takes precedence)]

Definition statement

This subclass/group covers:

Illustrative example of subject matter classified in this group:

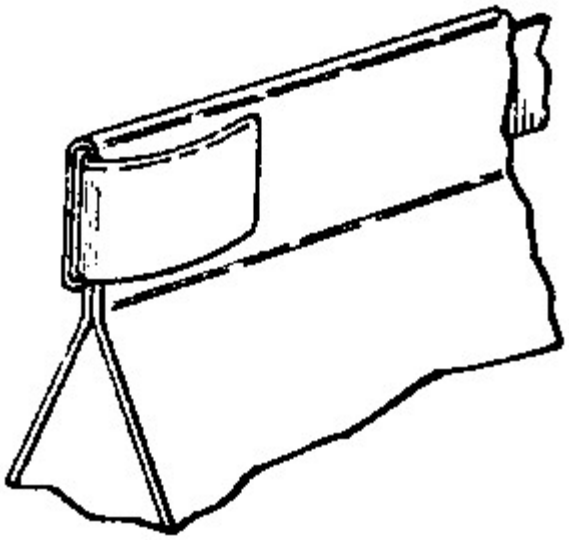

References relevant to classification in this group

This subclass/group does not cover:

Elements constricting the neck of the bag	B65D 33/1616

Informative references

Attention is drawn to the following places, which may be of interest for search:

Joints produced by deformation or tying of ends of elements	B65D 63/12

B65D 33/32

Metallic chain closures

Definition statement

This subclass/group covers:

Illustrative example of subject matter classified in this group:

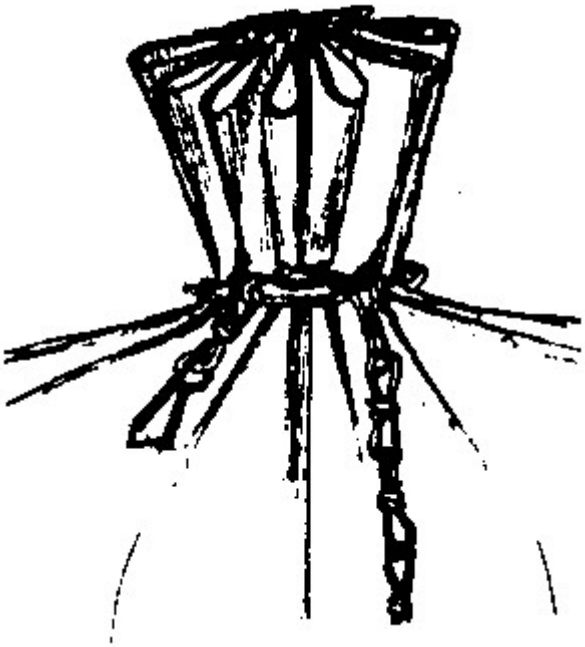

B65D 33/34

with special means for indicating unauthorised opening [N: (B65D 33/2516 takes precedence)]

Definition statement

This subclass/group covers:

Illustrative example of subject matter classified in this group:



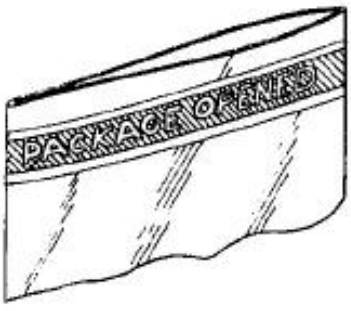

References relevant to classification in this group

This subclass/group does not cover:

Comprising tamper-indicating means	B65D 33/2516

Informative references

Attention is drawn to the following places, which may be of interest for search:

Closures with special means for indicating unauthorised opening	B65D 27/30
Container closures formed after filling with means for discouraging or for indicating unauthorised opening or removal	B65D 77/185

B65D 35/00

Pliable tubular containers adapted to be permanently [N: or temporarily] deformed to expel contents, e.g. collapsible tubes for toothpaste or other plastic or semi-liquid material; Holders therefor [N: (packages for tubes B65D 85/14)]

B65D 35/04

made in one piece

Definition statement

This subclass/group covers:

Illustrative example of subject matter classified in this group:

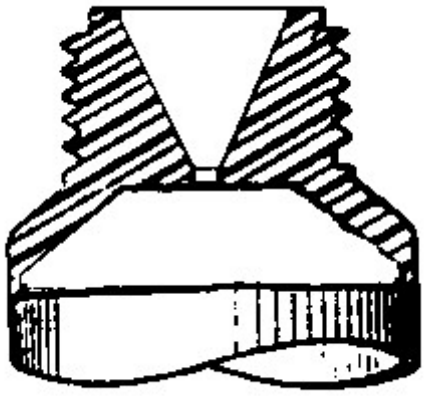

B65D 35/10

made by uniting or interconnecting two or more components

Definition statement

This subclass/group covers:
Illustrative example of subject matter classified in this group:

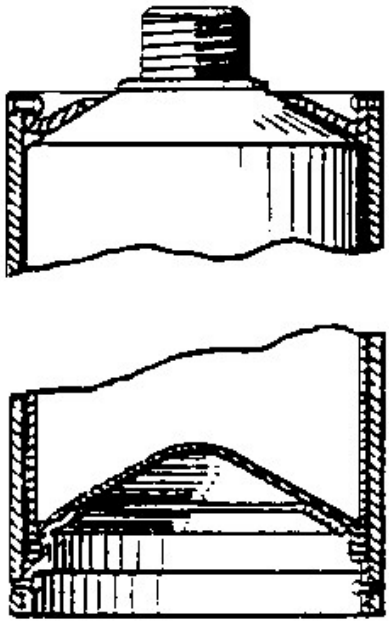

B65D 35/12

Connections between body and closure-receiving bush

Definition statement

This subclass/group covers:
Illustrative example of subject matter classified in this group:

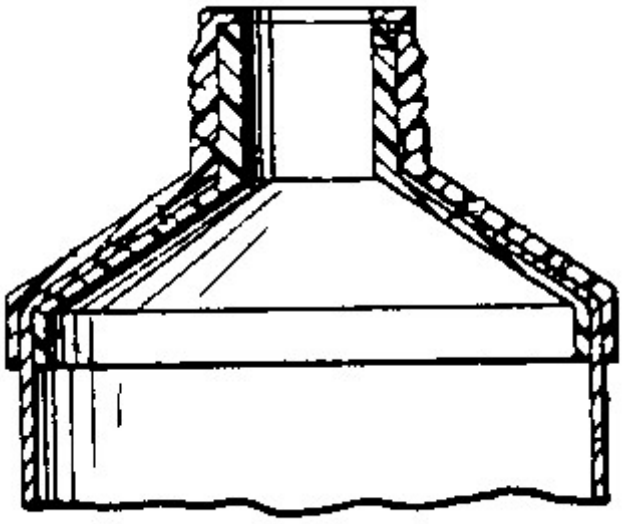

B65D 35/14

with linings or inserts

Definition statement

This subclass/group covers:
Illustrative example of subject matter classified in this group:

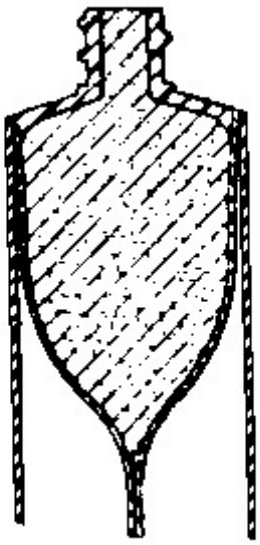

Informative references

Attention is drawn to the following places, which may be of interest for search:

Single-unit hand-held apparatus characterised by the container	B05B 11/048

B65D 35/18

for keeping body in rolled state after partial expulsion of contents

Definition statement

This subclass/group covers:

Illustrative example of subject matter classified in this group:

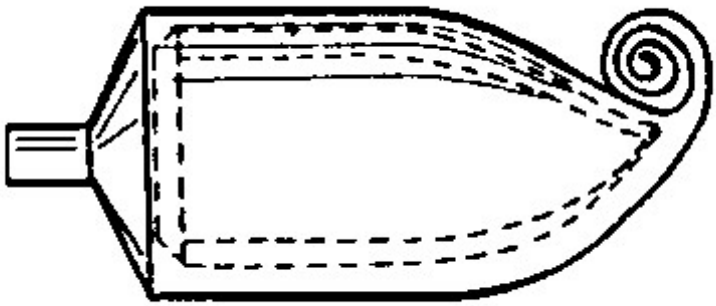

Informative references

Attention is drawn to the following places, which may be of interest for search:

Riveting; Dovetailing; Screwing; using press buttons or slide fasteners	B65D 33/25
The tubular container being provided on its internal surfaces with press buttons or the like for maintaining the container in a suppressed state	B65D 35/247

B65D 35/20

for retracting contents

Definition statement

This subclass/group covers:

Illustrative example of subject matter classified in this group:

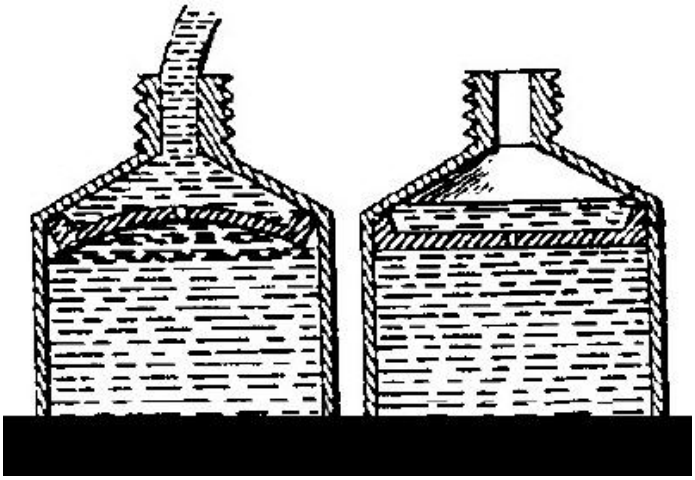

B65D 35/22

with two or more compartments

Definition statement

This subclass/group covers:
Illustrative example of subject matter classified in this group:

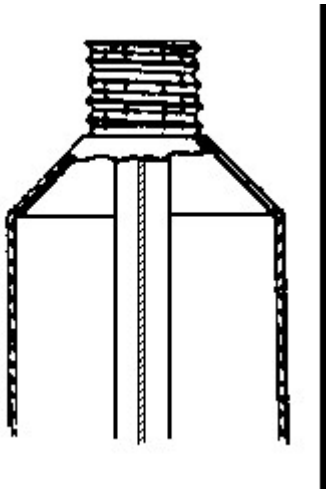

Informative references

Attention is drawn to the following places, which may be of interest for search:

Rigid containers disposed one within the other arranged parallel or concentrically and permitting simultaneous dispensing of the two materials without prior mixing	B65D 81/3227

Flexible containers disposed within rigid containers arranged parallel or concentrically and permitting simultaneous dispensing of the two materials without prior mixing	B65D 81/3244

B65D 35/24

with auxiliary devices (linings or inserts B65D 35/14)

References relevant to classification in this group

This subclass/group does not cover:

Spoon-shaped dispensing spouts for administering medicine	A61J 7/0015
Spoon-shaped dispensing spouts	B65D 51/246, B65D 77/245

B65D 35/242

[N: for mixing or discharging of two or more components]

Definition statement

This subclass/group covers:

Illustrative example of subject matter classified in this group:

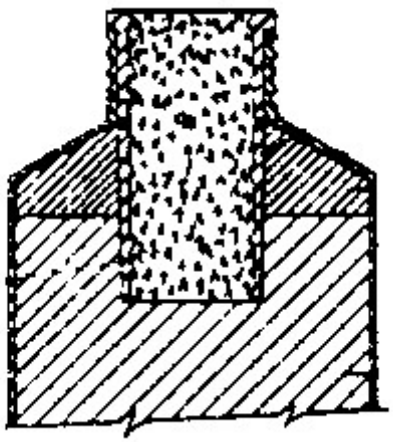

Informative references

Attention is drawn to the following places, which may be of interest for search:

Closures not otherwise provided for, with auxiliary containers for additional articles or materials	B65D 51/28

B65D 35/245

[N: Suspension means integral with, or attached to the container (B65D 51/242 takes precedence)]

Definition statement

This subclass/group covers:

Illustrative example of subject matter classified in this group:



Informative references

Attention is drawn to the following places, which may be of interest for search:

Suspension means	B65D 23/003
Holders for collapsible tubes	B65D 35/56

B65D 35/247

[N: the tubular container being provided on its internal surfaces with press buttons or the like for maintaining the container in compressed state]

Definition statement

This subclass/group covers:

Illustrative example of subject matter classified in this group:

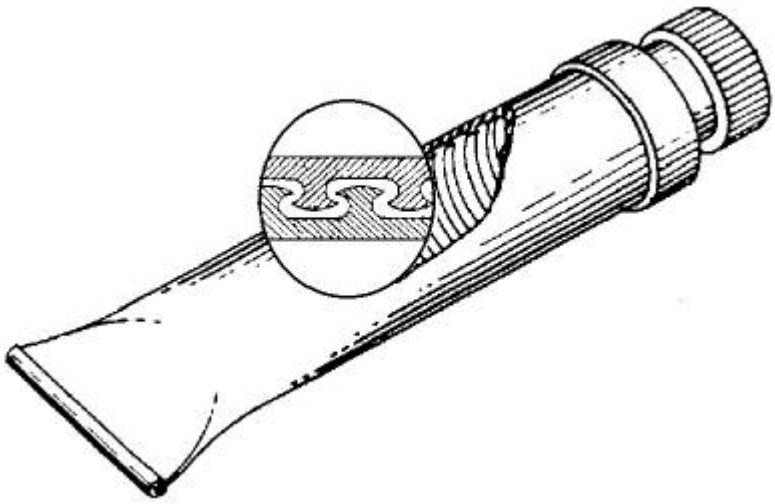

Informative references

Attention is drawn to the following places, which may be of interest for search:

Riveting; Dovetailing; Screwing; using press buttons or slide fasteners	B65D 33/25
Body construction for keeping body in rolled state after partial expulsion of contents	B65D 35/18

B65D 35/26

for filling

Definition statement

This subclass/group covers:

Illustrative example of subject matter classified in this group:

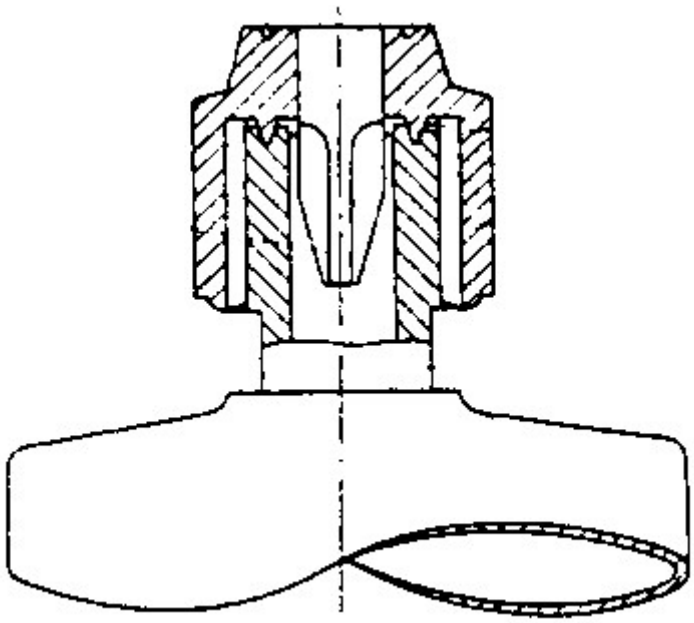

B65D 35/28

for expelling contents

References relevant to classification in this group

This subclass/group does not cover:

Brushes with reservoir or other means for applying substances, e.g. paints, pastes, water,	A46B 11/00
Metering discharge	B65D 35/40

B65D 35/285

[N: Co-operating squeezing supporting rollers]

Definition statement

This subclass/group covers:

Illustrative example of subject matter classified in this group:

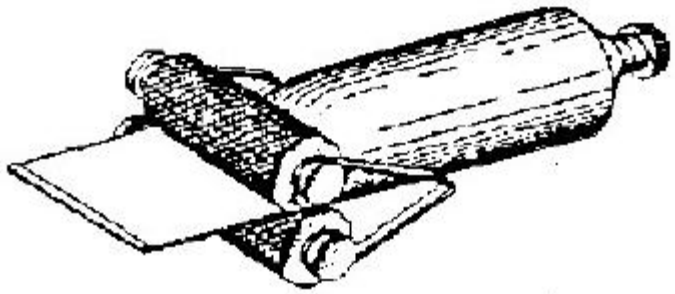

B65D 35/30

Pistons

Definition statement

This subclass/group covers:
Illustrative example of subject matter classified in this group:

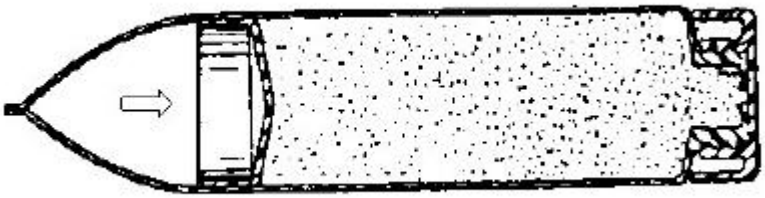

Informative references

Attention is drawn to the following places, which may be of interest for search:

Containers or packages provided with a piston or with a movable bottom or partition having approximately the same section as the container	B65D 83/0005

B65D 35/32

Winding keys

Definition statement

This subclass/group covers:

Illustrative example of subject matter classified in this group:

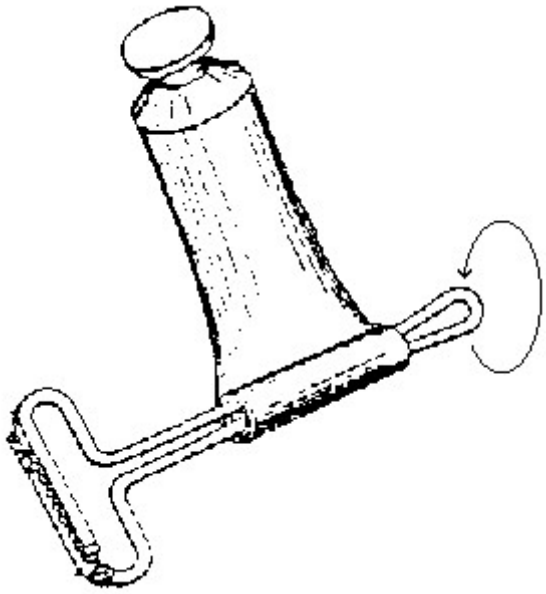

B65D 35/34

connected to, or associated with, tube holders

Definition statement

This subclass/group covers:
Illustrative example of subject matter classified in this group:

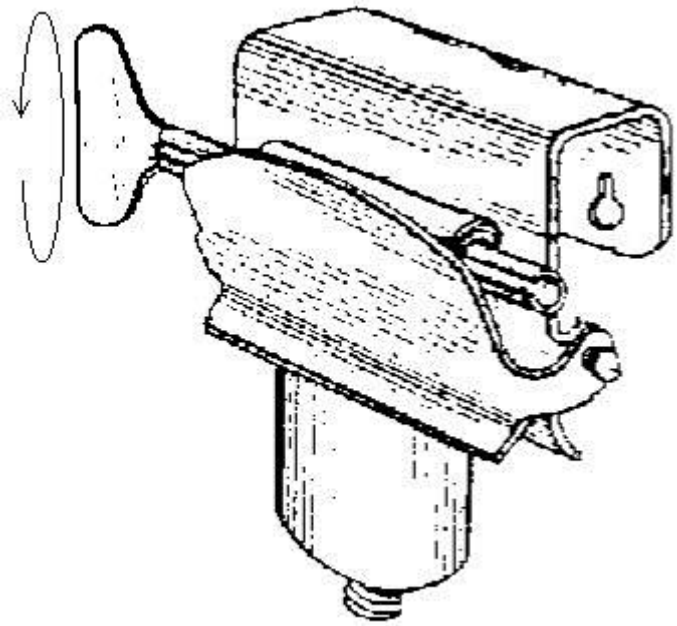

B65D 35/36

for applying contents to surfaces (brushes combined or associated with tubular containers A46B 11/00)

Definition statement

This subclass/group covers:

Illustrative example of subject matter classified in this group:

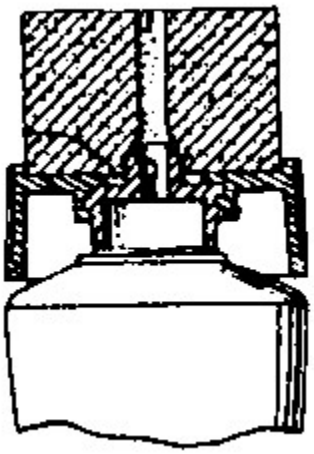

Informative references

Attention is drawn to the following places, which may be of interest for search:

Closures with filling and discharging, or with discharging, devices with pads or like contents-applying means	B65D 47/42

B65D 35/38

Nozzles

Definition statement

This subclass/group covers:

Illustrative example of subject matter classified in this group:

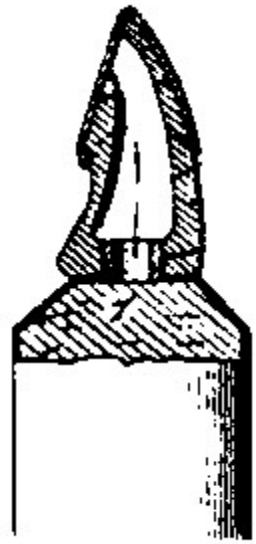

B65D 35/40

for metering discharge

Definition statement

This subclass/group covers:
Illustrative example of subject matter classified in this group:

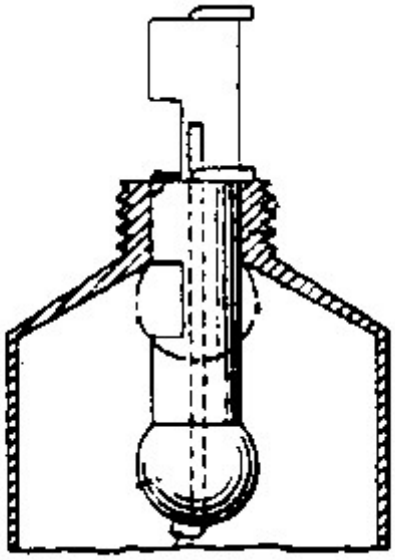

B65D 35/42

for preventing loss of removable closure members

Definition statement

This subclass/group covers:

Illustrative example of subject matter classified in this group:

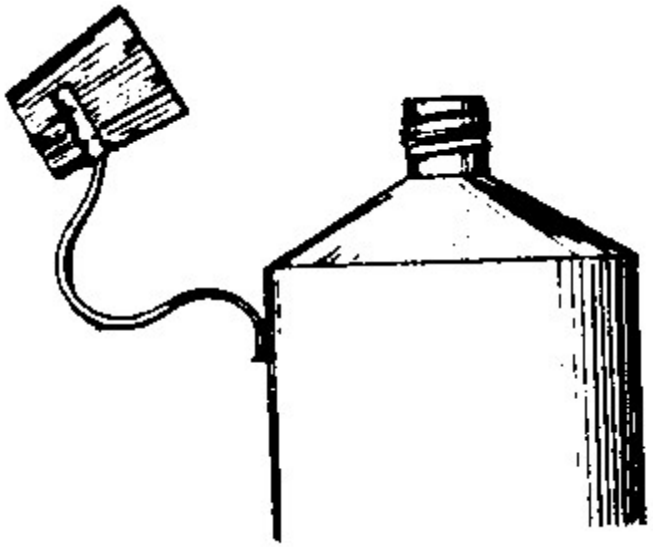

Informative references

Attention is drawn to the following places, which may be of interest for search:

Devices preventing loss of removable closure members	B65D 55/16

B65D 35/56

Holders for collapsible tubes [N: (B65D51/42L takes precedence)]

Definition statement

This subclass/group covers:

Illustrative example of subject matter classified in this group:

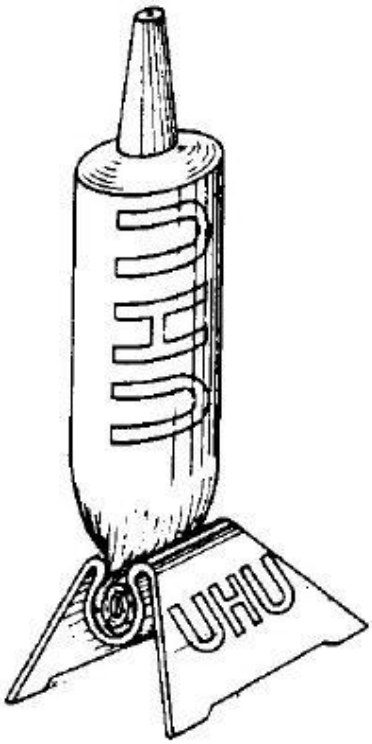

References relevant to classification in this group

This subclass/group does not cover:

Suspension means	B65D 35/245
Discharge	B65D 35/28, B65D 35/40
The closure being specifically formed for supporting the container	B65D 51/249

Informative references

Attention is drawn to the following places, which may be of interest for search:

The closure being specifically formed for supporting the container	B65D 51/249

B65D 35/565

[N: the holder being attached to a wall or suspended from a panel (B65D 35/285 takes precedence)]

Definition statement

This subclass/group covers:
Illustrative example of subject matter classified in this group:

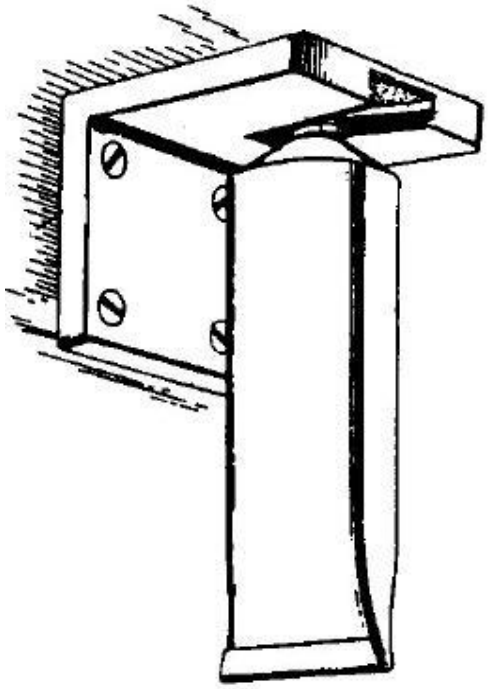

Informative references

Attention is drawn to the following places, which may be of interest for search:

Dispensers for soap applied by gravitational force	A47K 5/1214

B65D 37/00

Portable flexible containers not otherwise provided for

References relevant to classification in this group

This subclass/group does not cover:

Big flexible bags	B65D 88/16

B65D 39/00

Closures arranged within necks or pouring openings or in discharge apertures, e.g. stoppers (lids or covers B65D 43/00; with additional securing elements B65D 45/00)

References relevant to classification in this group

This subclass/group does not cover:

Separate closure devices for reclosing opened cans, tins, e.g. beer cans	B65D 51/007
Closure members for apertures in vehicle floors, e.g. plugs	B62D 25/24

Informative references

Attention is drawn to the following places, which may be of interest for search:

Closures to be pierced by an extracting-device for the contents and fixed on the container by separate retaining means	B65D 51/002

B65D 39/0005

[N: made in one piece (B65D 39/02, B65D 39/04, B65D 39/06, B65D 39/08 take precedence)]

References relevant to classification in this group

This subclass/group does not cover:

Disc closures	B65D 39/02
Cup-shaped plugs or like hollow flanged members	B65D 39/04
Balls	B65D 39/06
Threaded or like closure members secured by rotation; Bushes therefor	B65D 39/08

Special rules of classification within this group

The use of available Indexing Codes is mandatory.

B65D 39/0011

[N: from natural or synthetic cork, e.g. for wine bottles or the like]

Definition statement

This subclass/group covers:
Illustrative example of subject matter classified in this group:

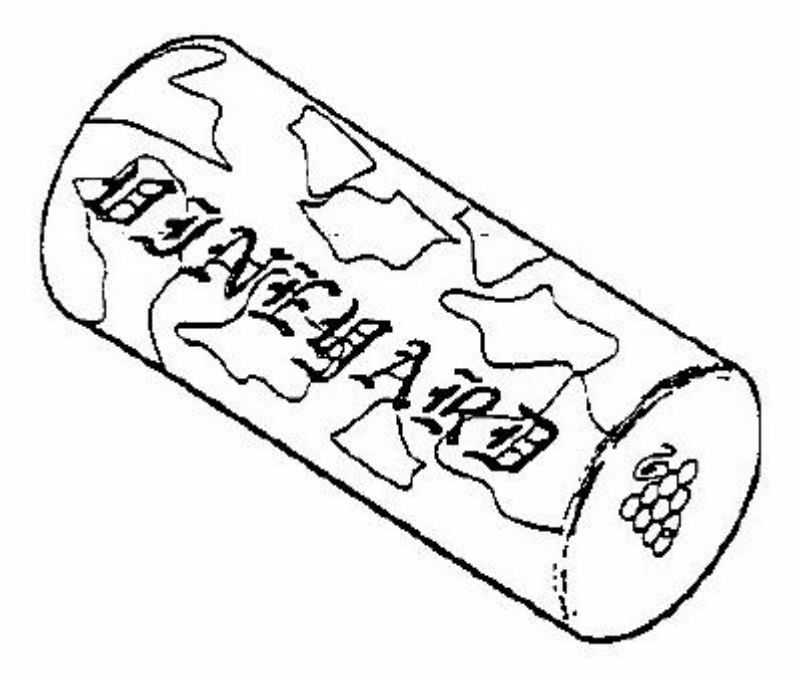

Special rules of classification within this group

The use of available Indexing Codes is mandatory.

B65D 39/0017

[N: Injection-molded plastic closures for "Champagne"- or "Sekt"-type bottles]

Definition statement

This subclass/group covers:
Illustrative example of subject matter classified in this group:

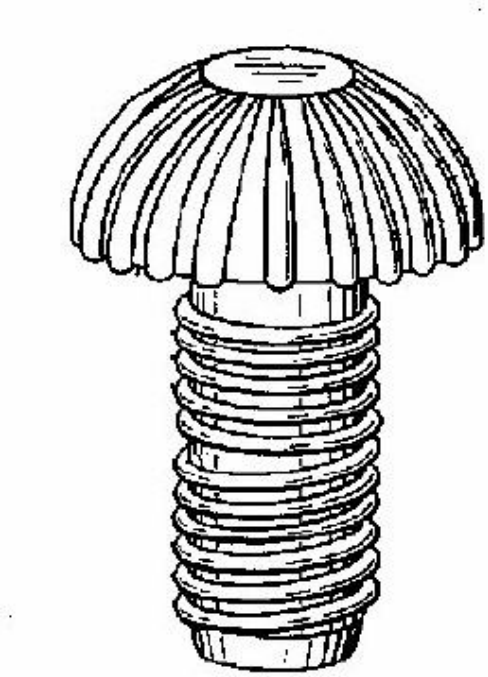

Special rules of classification within this group

The use of available Indexing Codes is mandatory.

B65D 39/0023

[N: Plastic cap-shaped hollow plugs]

Definition statement

This subclass/group covers:
Illustrative example of subject matter classified in this group:

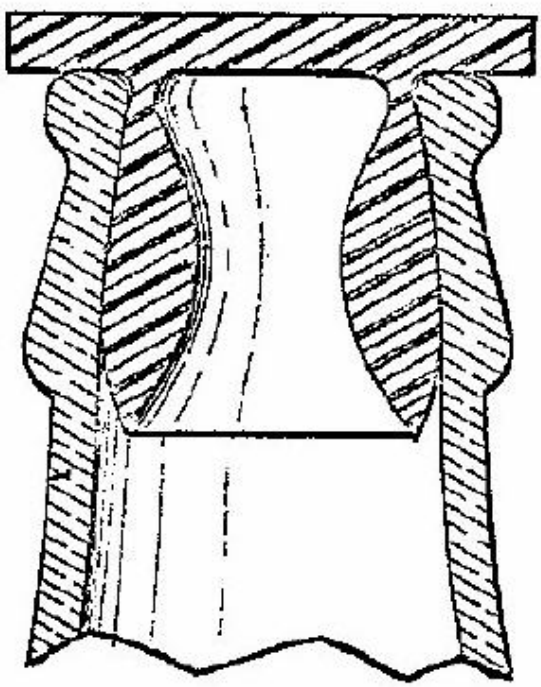

References relevant to classification in this group

This subclass/group does not cover:

Cup-shaped hollow plugs	B65D 39/04

Special rules of classification within this group

The use of available Indexing Codes is mandatory.

B65D 39/0029

[N: Plastic closures other than those covered by groups B65D 39/0011 to B65D 39/0023]

Definition statement

This subclass/group covers:

Illustrative example of subject matter classified in this group:

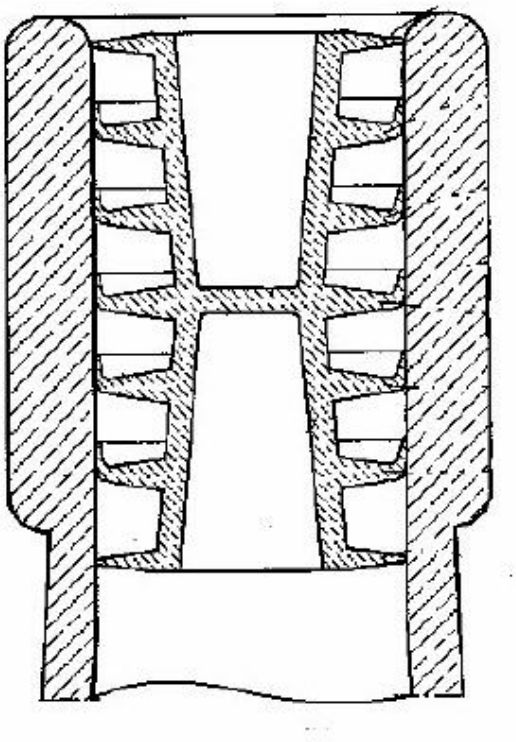

Special rules of classification within this group

The use of available Indexing Codes is mandatory.

B65D 39/0035

[N: Swing or hinged stoppers, e.g. for "Grolsch"-type bottles (toggle mechanisms B65D 45/06 or B65D 45/16)]

Definition statement

This subclass/group covers:

Illustrative example of subject matter classified in this group:

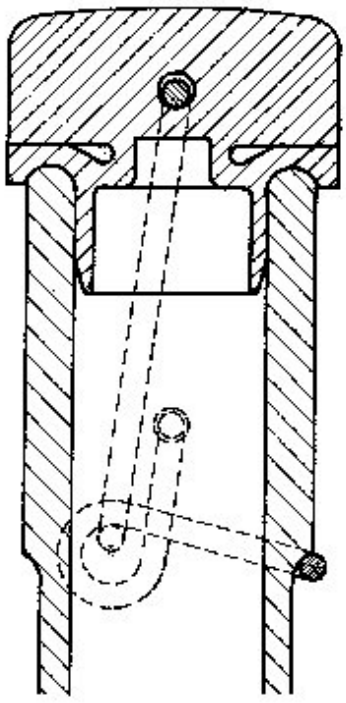

Special rules of classification within this group

The use of available Indexing Codes is mandatory.

B65D 39/0041

[N: Bungs, e.g. wooden or rubber, for barrels or the like (B65D 39/08 takes precedence)]

Definition statement

This subclass/group covers:

Illustrative example of subject matter classified in this group:

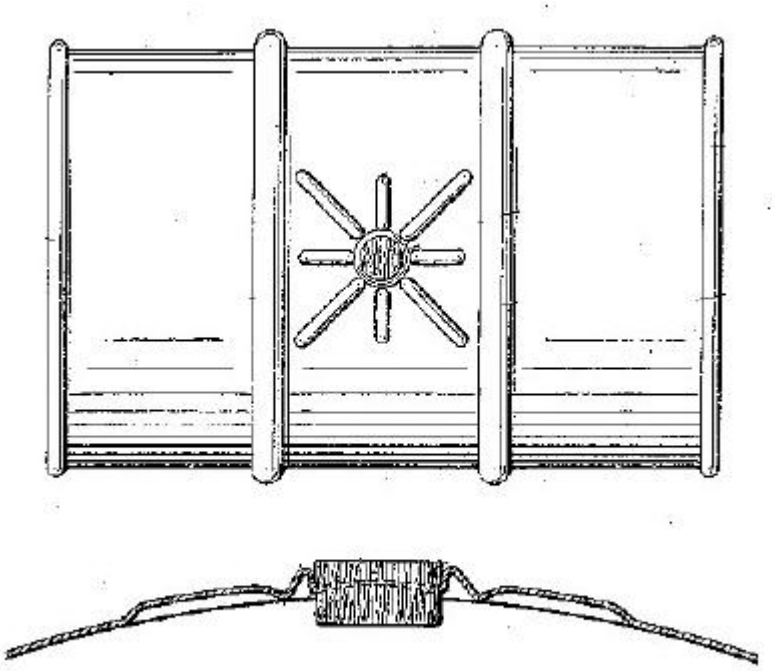

References relevant to classification in this group

This subclass/group does not cover:

Threaded or like closure members secured by rotation; Bushes therefor	B65D 39/08

Special rules of classification within this group

The use of available Indexing Codes is mandatory.

B65D 39/0047

[N: Glass, ceramic or metal stoppers for perfume bottles or the like (B65D 39/0035 takes precedence)]

Definition statement

This subclass/group covers:

Illustrative example of subject matter classified in this group:

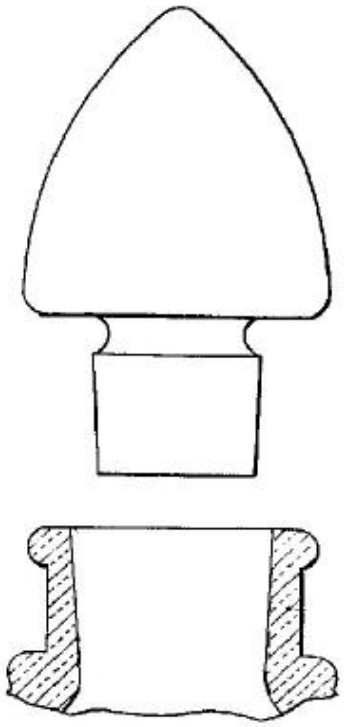

Special rules of classification within this group

The use of available Indexing Codes is mandatory.

B65D 39/0052

[N: made in more than one piece (B65D 39/02, B65D 39/04, B65D 39/06, B65D 39/08 take precedence)]

References relevant to classification in this group

This subclass/group does not cover:

Disc closures	B65D 39/02
Cup-shaped plugs or like hollow flanged members	B65D 39/04
Balls	B65D 39/06
Threaded or like closure members secured by rotation; Bushes therefor	B65D 39/08

Special rules of classification within this group

The use of available Indexing Codes is mandatory.

B65D 39/0058

[N: from natural or synthetic cork, e.g. for wine bottles or the like]

Definition statement

This subclass/group covers:
Illustrative example of subject matter classified in this group:

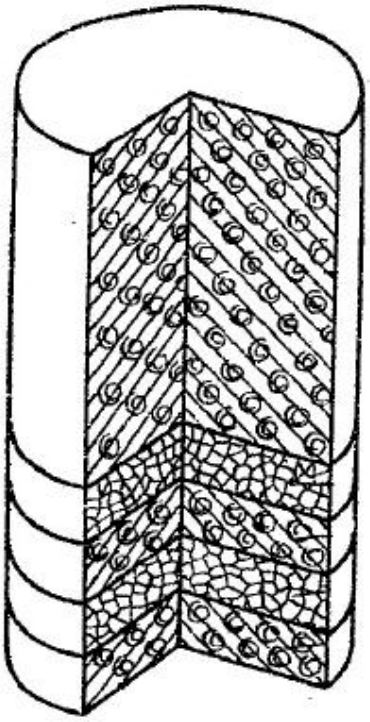

Special rules of classification within this group

The use of available Indexing Codes is mandatory.

B65D 39/0064

[N: Injection-molded plastic closures for "Champagne"-or "Sekt"-type bottles]

Definition statement

This subclass/group covers:
Illustrative example of subject matter classified in this group:

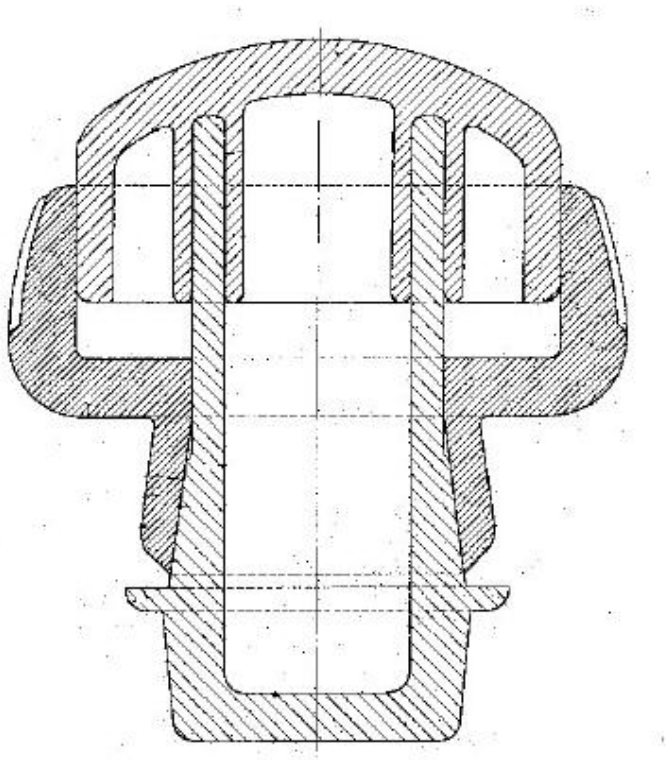

Special rules of classification within this group

The use of available Indexing Codes is mandatory.

B65D 39/007

[N: Plastic cap-shaped hollow plugs]

Definition statement

This subclass/group covers:
Illustrative example of subject matter classified in this group:

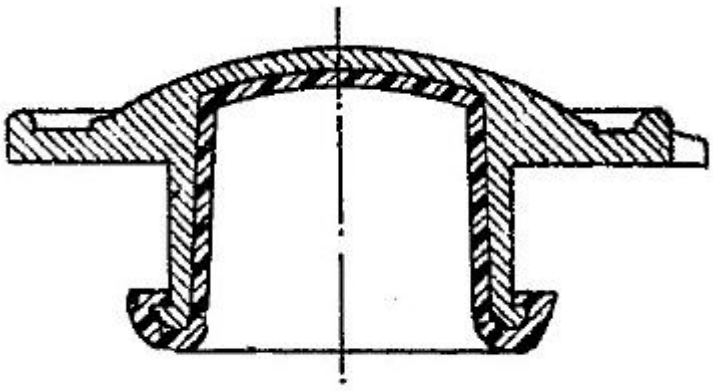

References relevant to classification in this group

This subclass/group does not cover:

Cup-shaped hollow plugs	B65D 39/04

Special rules of classification within this group

The use of available Indexing Codes is mandatory.

B65D 39/0076

[N: Plastic closures other than those covered by groups B65D 39/0058 to B65D 39/007]

Special rules of classification within this group

The use of available Indexing Codes is mandatory.

B65D 39/0082

[N: Swing or hinged stoppers, e.g. for "Grolsch"-type bottles (toggle mechanisms B65D 45/06 or B65D 45/16)]

Definition statement

This subclass/group covers:

Illustrative example of subject matter classified in this group:

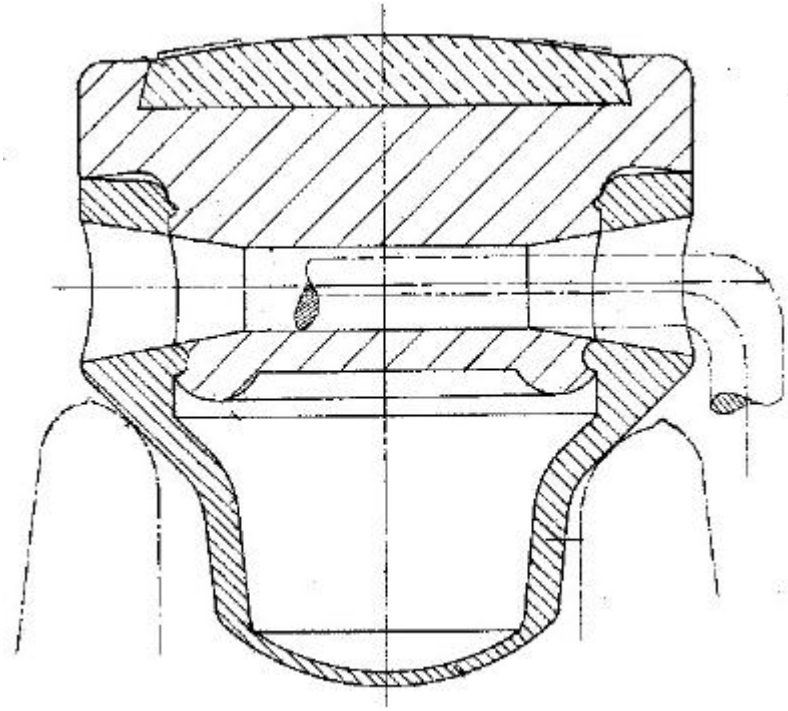

Special rules of classification within this group

The use of available Indexing Codes is mandatory.

B65D 39/0088

[N: Bungs, e.g. wooden or rubber, for barrels or the like (B65D 39/08 takes precedence)]

Definition statement

This subclass/group covers:

Illustrative example of subject matter classified in this group:

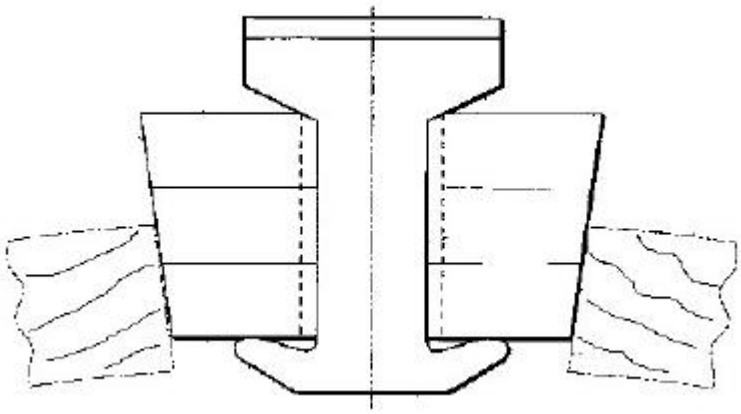

References relevant to classification in this group

This subclass/group does not cover:

Threaded or like closure members secured by rotation; Bushes therefor	B65D 39/08

Special rules of classification within this group

The use of available Indexing Codes is mandatory.

B65D 39/0094

[N: Glass, ceramic or metal stoppers for perfume bottles or the like (B65D 39/0082 takes precedence)]

Definition statement

This subclass/group covers:

Illustrative example of subject matter classified in this group:

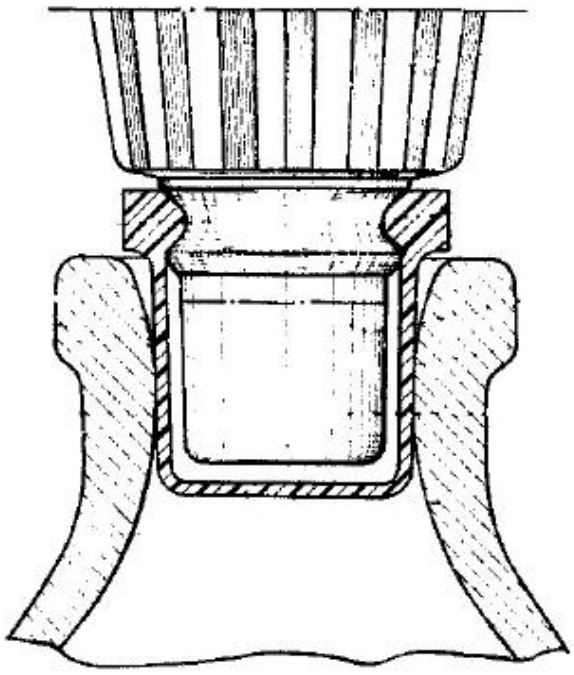

Special rules of classification within this group

The use of available Indexing Codes is mandatory.

B65D 39/02

Disc closures (discs with flanges B65D 39/04)

Definition statement

This subclass/group covers:
Illustrative example of subject matter classified in this group:

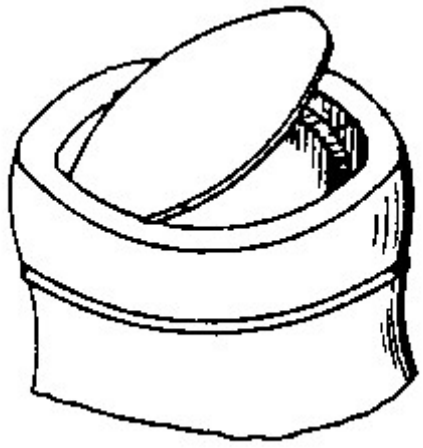

Informative references

Attention is drawn to the following places, which may be of interest for search:

Container closures formed after filling the cover being maintained by projections or recesses on the container	B65D 77/2016
Disc closures	B65D 2543/00037

Special rules of classification within this group

The use of available Indexing Codes is mandatory.

B65D 39/025

[N: the closure being maintained in place by an additional element]

Definition statement

This subclass/group covers:

Illustrative example of subject matter classified in this group:

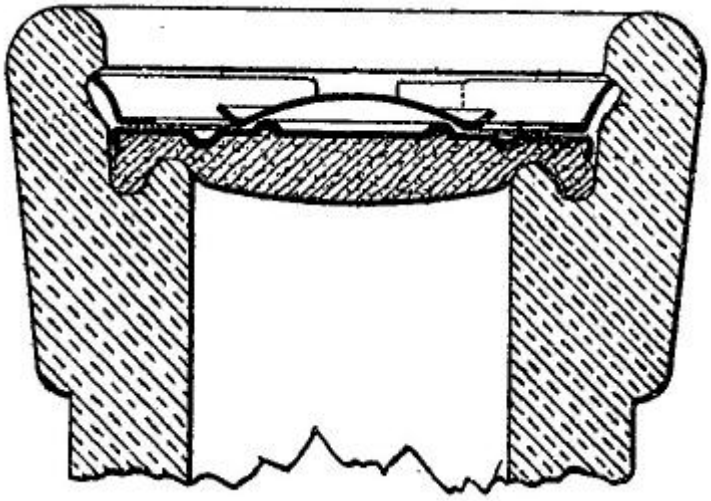

Special rules of classification within this group

The use of available Indexing Codes is mandatory.

B65D 39/04

Cup-shaped plugs or like hollow flanged members

Definition statement

This subclass/group covers:
Illustrative example of subject matter classified in this group:

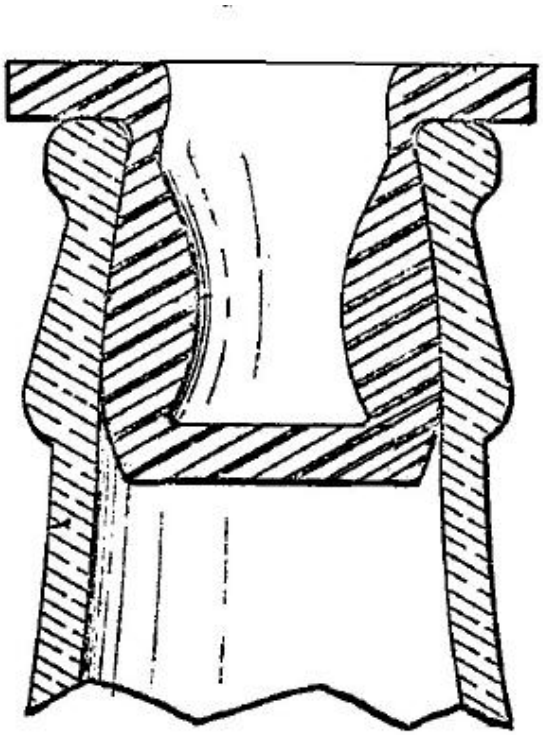

References relevant to classification in this group

This subclass/group does not cover:

Cap-shaped hollow plugs	B65D 39/0023, B65D 39/007

Special rules of classification within this group

The use of available Indexing Codes is mandatory.

B65D 39/06

Balls

Definition statement

This subclass/group covers:
Illustrative example of subject matter classified in this group:

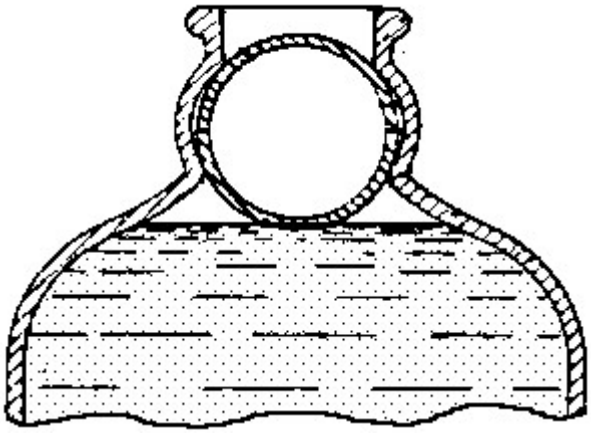

Informative references

Attention is drawn to the following places, which may be of interest for search:

Weighted valves	B65D 49/04

B65D 39/08

Threaded or like closure members secured by rotation; Bushes therefor

Definition statement

This subclass/group covers:

Illustrative example of subject matter classified in this group:

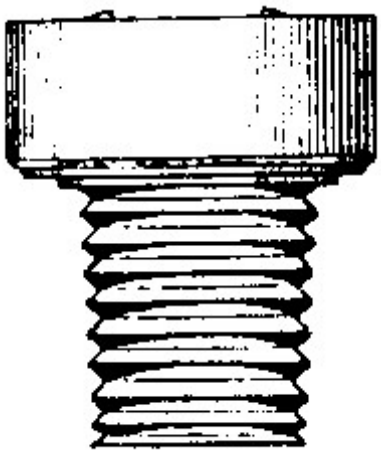

Informative references

Attention is drawn to the following places, which may be of interest for search:

Caps or cap-like covers without lines of weakness engaging a bung-ring clamped on the neck or in the wall	B65D 41/083

B65D 39/084

[N: Separated bung-rings made by one element]

Definition statement

This subclass/group covers:
Illustrative example of subject matter classified in this group:



B65D 39/086

[N: Separated bung-rings made by several elements]

Definition statement

This subclass/group covers:
Illustrative example of subject matter classified in this group (US1906205).

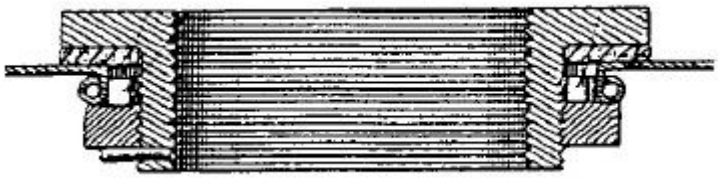

B65D 39/088

[N: Bungs with special means facilitating handling thereof]

Definition statement

This subclass/group covers:
Illustrative example of subject matter classified in this group:

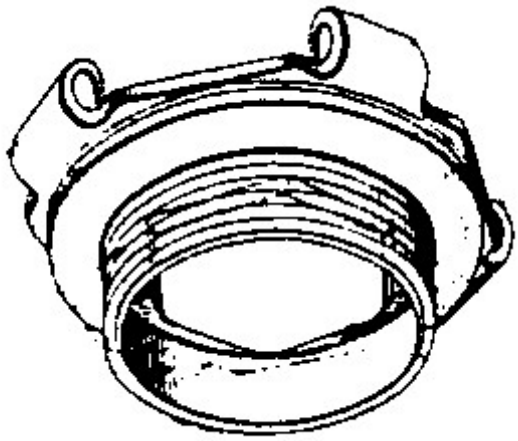

B65D 39/10

with bayonet cams

Definition statement

This subclass/group covers:
Illustrative example of subject matter classified in this group:

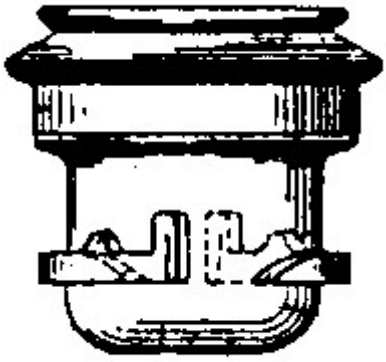

B65D 39/12

expansible, e.g. inflatable

Definition statement

This subclass/group covers:
Illustrative example of subject matter classified in this group:

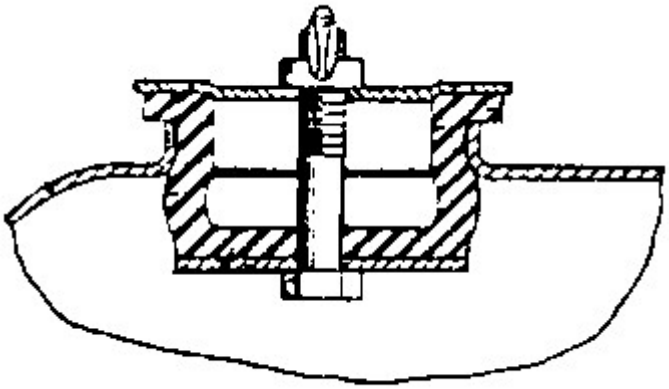

Informative references

Attention is drawn to the following places, which may be of interest for search:

Clamping or other pressure-applying devices being an annular member applying radial pressure against the inner surface of the container wall	B65D 45/327

B65D 39/14

extending through lateral openings in necks

Definition statement

This subclass/group covers:

Illustrative example of subject matter classified in this group:

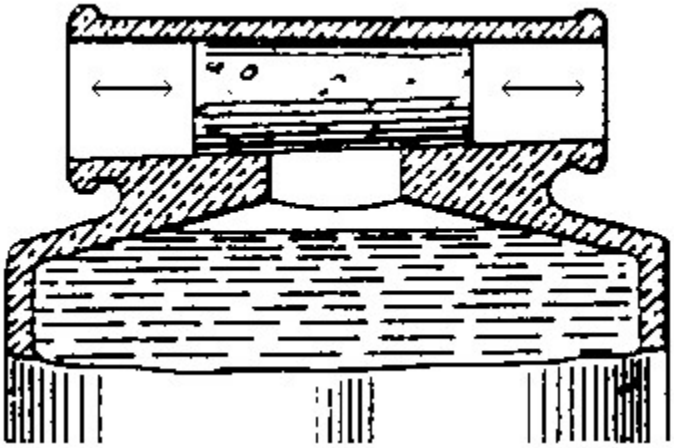

B65D 39/16

with handles or other special means facilitating manual actuation

Definition statement

This subclass/group covers:

Illustrative example of subject matter classified in this group (US2249022).

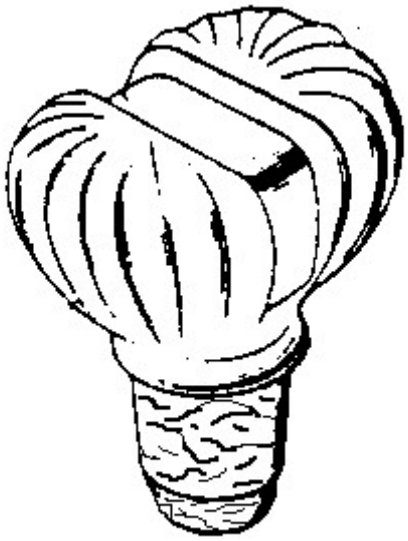

Informative references

Attention is drawn to the following places, which may be of interest for search:

Caps combined with stoppers	B65D 41/28
Caps or cap-like covers combined with stoppers	B65D 41/58

Special rules of classification within this group

The use of available Indexing Codes is mandatory.

B65D 41/00

Caps, e.g. crown caps, crown seals, i.e. members having parts arranged for engagement with the external periphery of a neck or wall defining a pouring opening or discharge aperture; Protective cap-like covers for closure members, e.g.

decorative covers of metal foil or paper (B65D 45/00 takes precedence; combinations of caps and protective cap-like covers B65D 51/18; making closures by working metal sheet B21D 51/44; affixing labels B65C 3/06)

References relevant to classification in this group

This subclass/group does not cover:

Clamping or other pressure-applying devices for securing or retaining closure members	B65D 45/00
Closing bottles or jars by applying closure members	B67B

B65D 41/026

[N: Caps or cap-like covers attached to the bottle neck by sliding them perpendicularly to the neck axis]

Definition statement

This subclass/group covers:

Illustrative example of subject matter classified in this group:

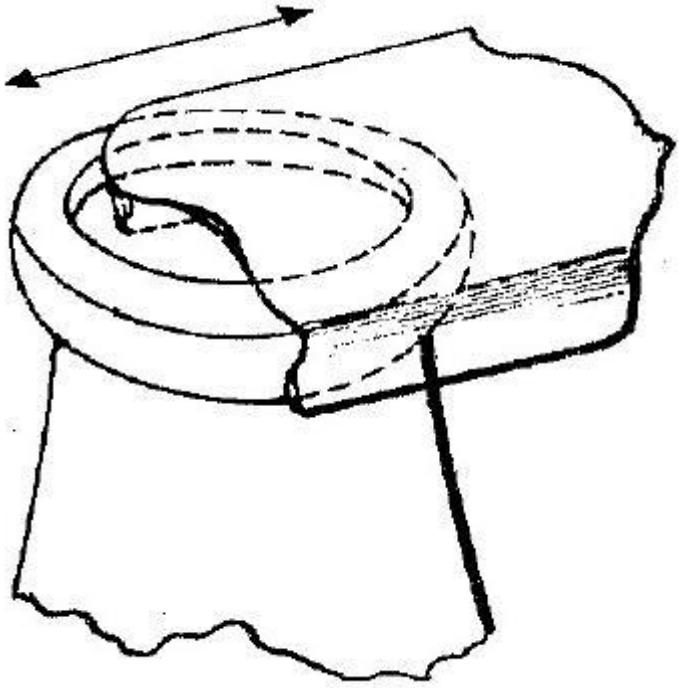

B65D 41/04

Threaded or like caps or cap-like covers secured by rotation

References relevant to classification in this group

This subclass/group does not cover:

Push-on and twist-off	B65D 41/17;
For venting means	B65D 51/1622, B65D 51/1661, B65D 51/1688
Materials in mouldable or extrudable form for sealing or packing joints or covers	C09K 3/10

B65D 41/0414

[N: formed by a plug, collar, flange, rib or the like contacting the internal surface of a container neck]

Definition statement

This subclass/group covers:

Illustrative example of subject matter classified in this group:

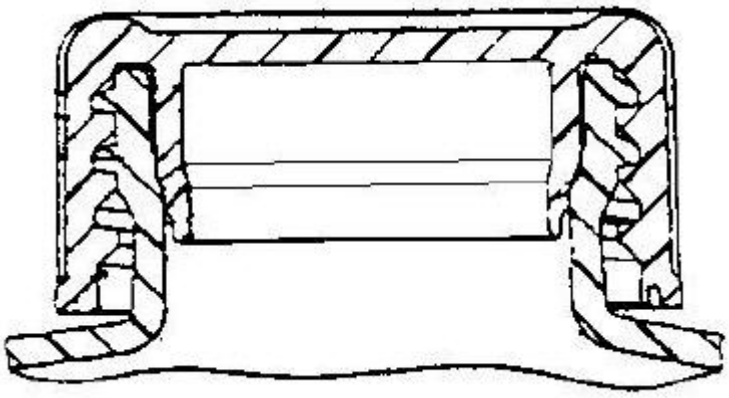

B65D 41/0421

[N: and combined with integral sealing means contacting other surfaces of a container neck]

Definition statement

This subclass/group covers:
Illustrative example of subject matter classified in this group:

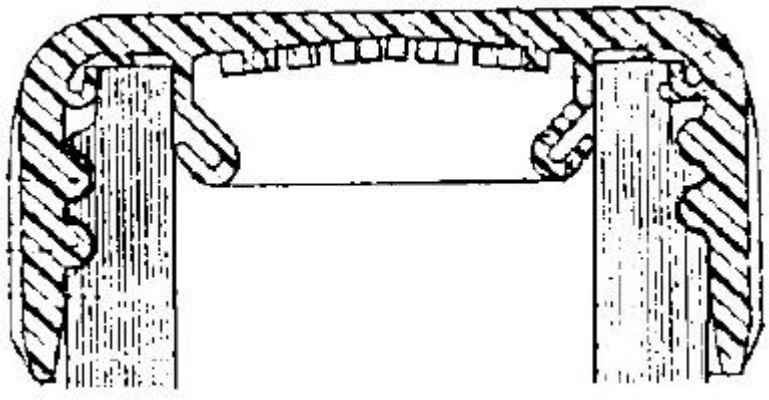

B65D 41/0428

[N: formed by a collar, flange, rib or the like contacting the top rim or the top edges or the external surface of a container neck (B65D 41/0421 takes precedence)]

Definition statement

This subclass/group covers:
Illustrative example of subject matter classified in this group:

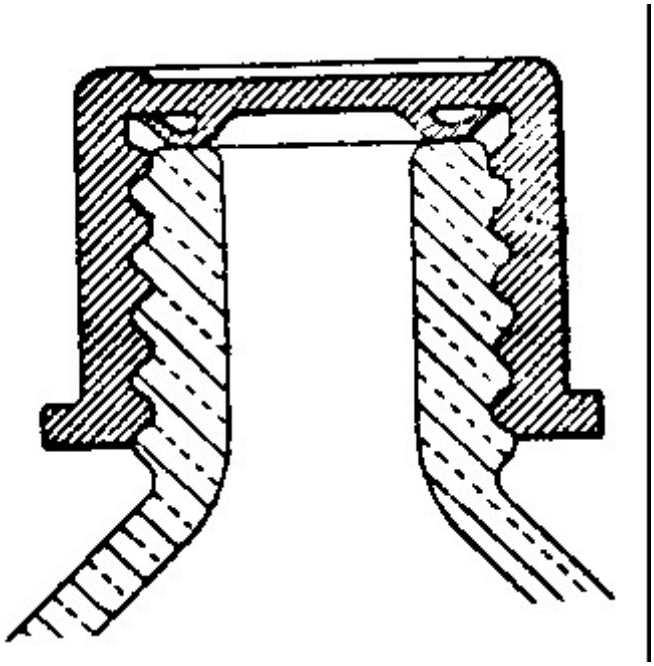

B65D 41/0435

[N: with separate sealing elements]

References relevant to classification in this group

This subclass/group does not cover:

If the threading is of importance, or integral and separate sealing element	B65D 41/04
Combination stopper and cap	B65D 41/28
Disc or annular member held in closed position by threads	B65D 45/30
Disc held in sealing engagement with container mouth	B65D 51/14

B65D 41/0442

[N: Collars or rings (B65D 41/0457 takes precedence)]

Definition statement

This subclass/group covers:

Illustrative example of subject matter classified in this group:

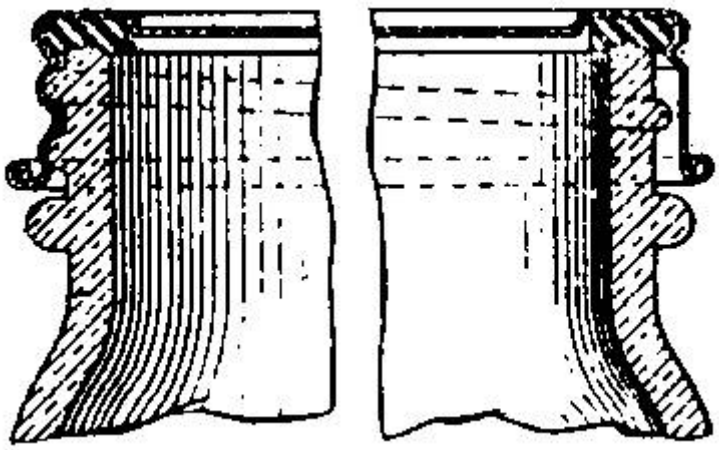

References relevant to classification in this group

This subclass/group does not cover:

The sealing element covering or co-operating with the screw-thread or the like of a container neck	B65D 41/0457

B65D 41/045

[N: Discs (B65D 41/0457 takes precedence)]

Definition statement

This subclass/group covers:
Illustrative example of subject matter classified in this group:

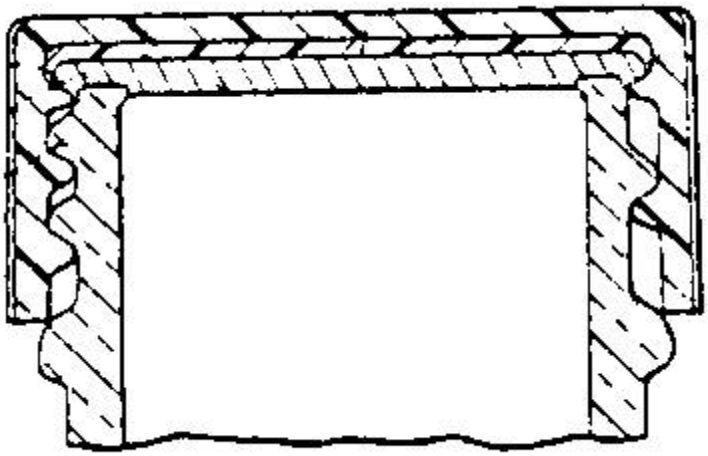

References relevant to classification in this group

This subclass/group does not cover:

The sealing element covering or co-operating with the screw-thread or the like of a container neck	B65D 41/0457

Informative references

Attention is drawn to the following places, which may be of interest for search:

Discs	B65D 53/04

B65D 41/0457

[N: the sealing element covering or co-operating with the screw-thread or the like of a container neck]

Definition statement

This subclass/group covers:

Illustrative example of subject matter classified in this group:

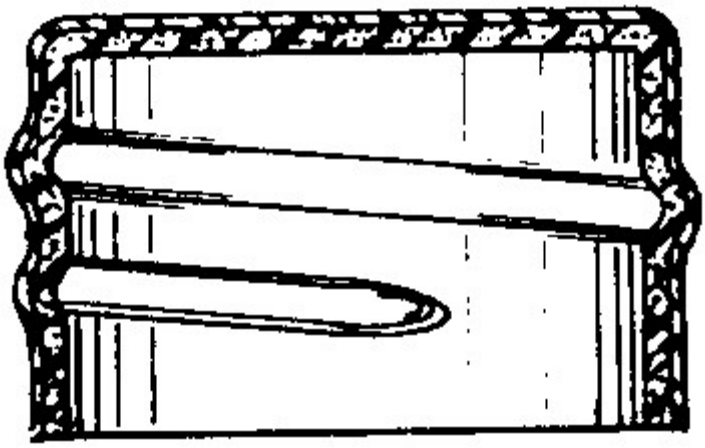

B65D 41/0464

[N: the screw-thread or the like being formed by conforming the cap-skirt to the thread or the like formation on a container neck]

Definition statement

This subclass/group covers:

Illustrative example of subject matter classified in this group:

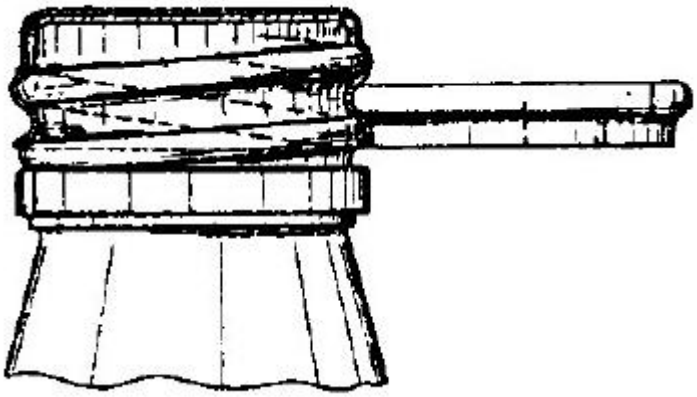

B65D 41/0471

[N: with means for positioning the cap on the container, or for limiting the movement of the cap, or for preventing accidental

loosening of the cap]

Definition statement

This subclass/group covers:
Illustrative example of subject matter classified in this group:

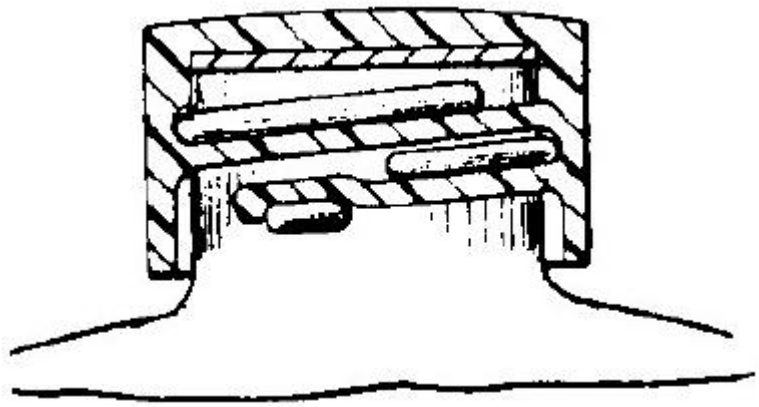

References relevant to classification in this group

This subclass/group does not cover:

Double wall caps	B65D 41/0492
Closures in general	B65D 2251/04

B65D 41/0485

[N: with means specially adapted for facilitating the operation of opening or closing]

Definition statement

This subclass/group covers:
Illustrative example of subject matter classified in this group:

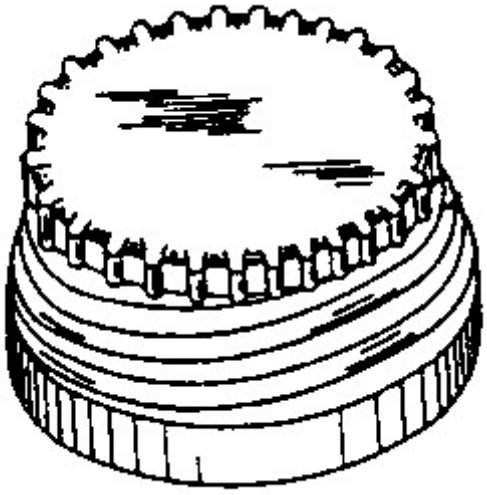

B65D 41/0492

[N: formed by several elements connected together (B65D 41/0478 takes precedence)]

Definition statement

This subclass/group covers:
Illustrative example of subject matter classified in this group:

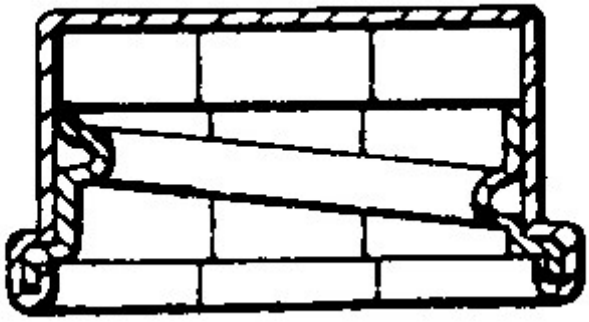

B65D 41/06

with bayonet cams, [N: i.e. removed by first pushing axially to disengage the cams and then rotating]

Definition statement

This subclass/group covers:
Illustrative example of subject matter classified in this group:

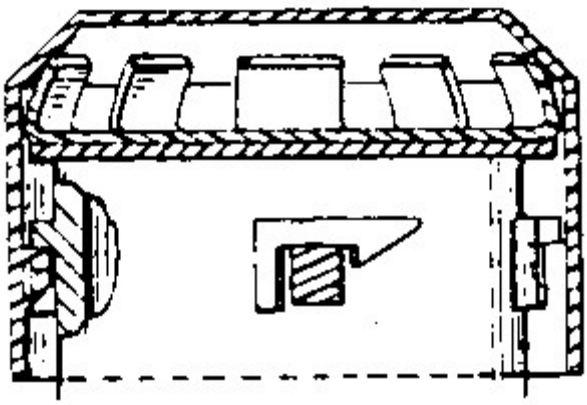

B65D 41/065

[N: with integral internal sealing means]

Definition statement

This subclass/group covers:
Illustrative example of subject matter classified in this group:





B65D 41/08

engaging a threaded ring clamped on the external periphery of the neck or wall

Definition statement

This subclass/group covers:
Illustrative example of subject matter classified in this group:

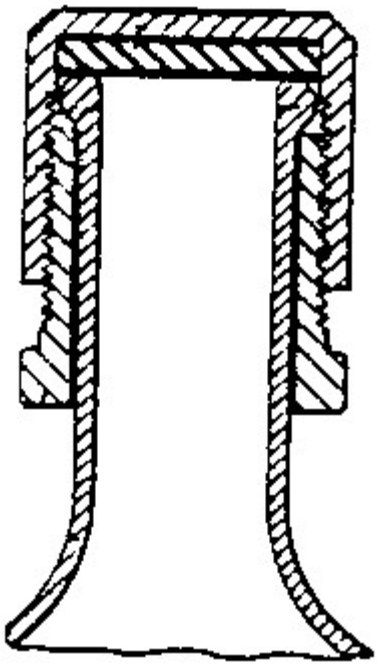

Informative references

Attention is drawn to the following places, which may be of interest for search:

Screw-threaded or bayonet-type annular members cooperating with an intermediate ring	B65D 45/305

B65D 41/083

[N: engaging a bung-ring clamped on the neck or in the wall]

Definition statement

This subclass/group covers:

Illustrative example of subject matter classified in this group:

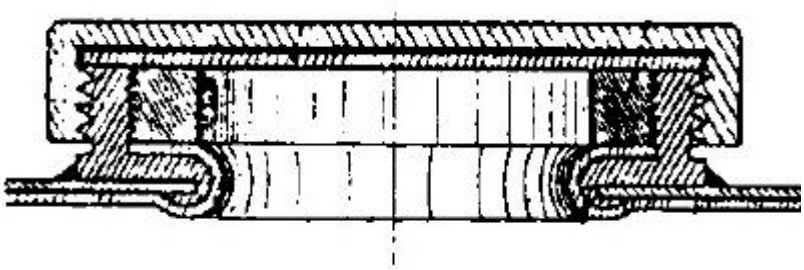

Informative references

Attention is drawn to the following places, which may be of interest for search:

Threaded or like closure members secured by rotation; Bushes therefor	B65D 39/08

B65D 41/086

[N: with integral internal sealing means]

Definition statement

This subclass/group covers:

Illustrative example of subject matter classified in this group:

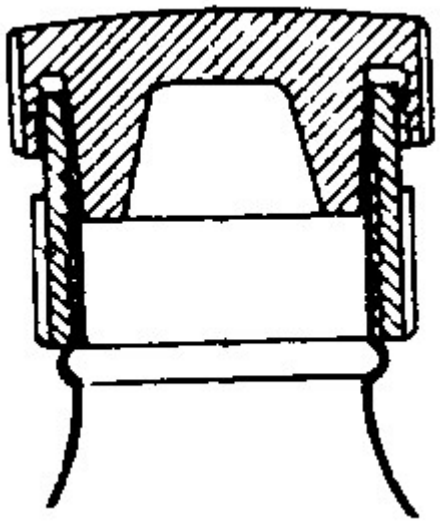

B65D 41/10

Caps or cap-like covers adapted to be secured in position by permanent deformation of the wall-engaging parts

Definition statement

This subclass/group covers:

Illustrative example of subject matter classified in this group:

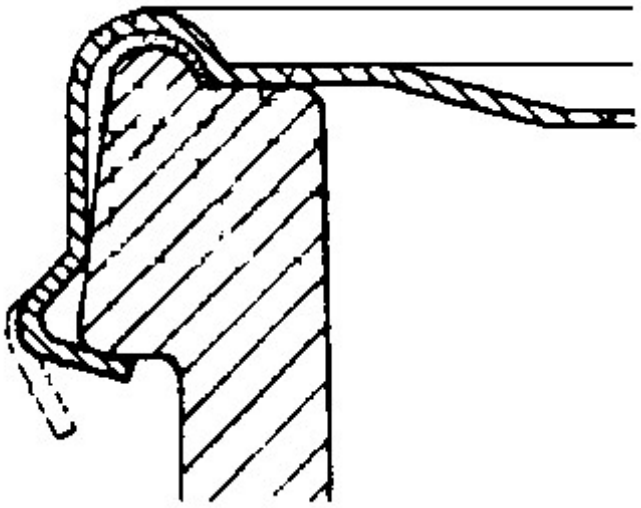

B65D 41/12

made of relatively stiff metallic materials, e.g. crown caps

Definition statement

This subclass/group covers:
Illustrative example of subject matter classified in this group:

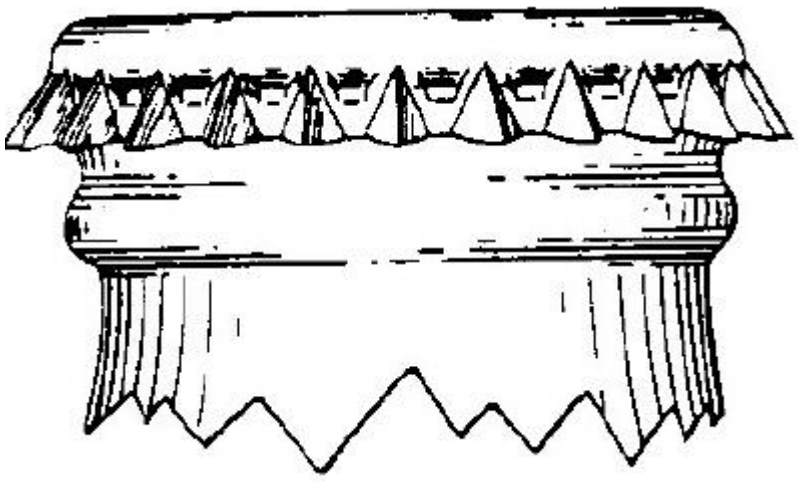

B65D 41/14

made of metallic foil or like thin flexible material

Definition statement

This subclass/group covers:
Illustrative example of subject matter classified in this group:

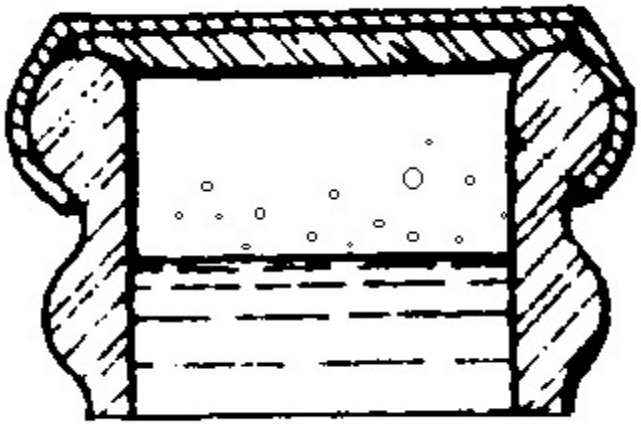

B65D 41/16

Snap-on caps or cap-like covers

Definition statement

This subclass/group covers:
Illustrative example of subject matter classified in this group:

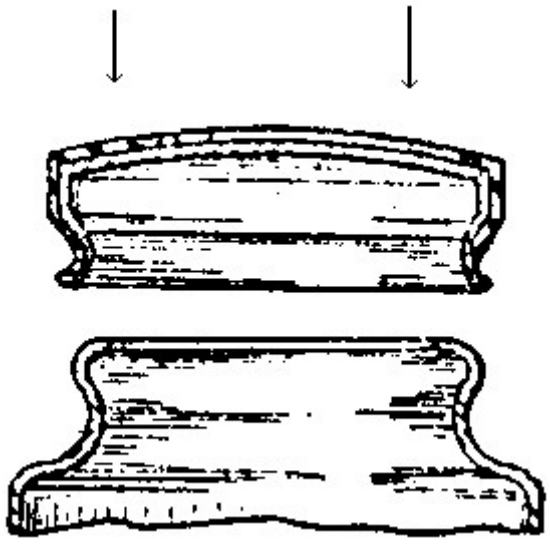

B65D 41/17

push-on and twist-off

Definition statement

This subclass/group covers:
Illustrative example of subject matter classified in this group:

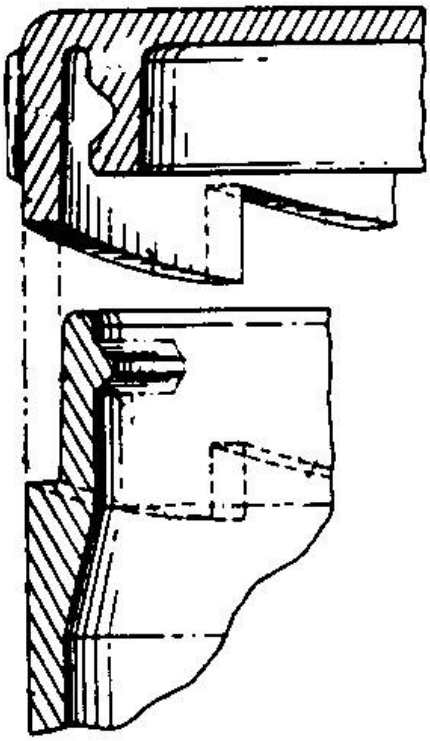

B65D 41/18

non-metallic, e.g. made of paper or plastics [N: (B65D 41/17 takes precedence)]

Definition statement

This subclass/group covers:

Illustrative example of subject matter classified in this group:

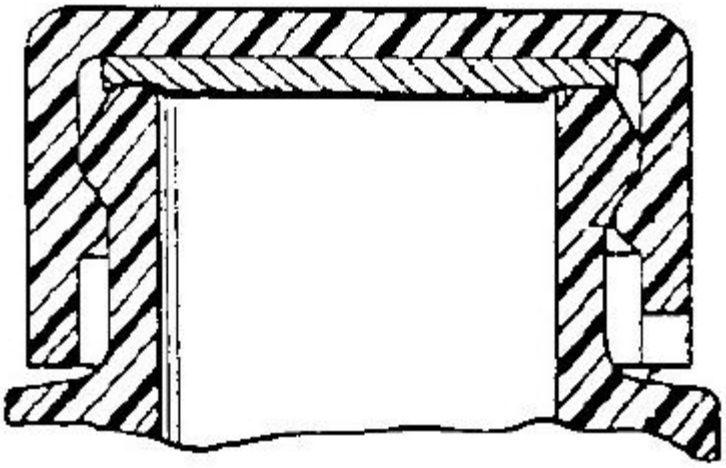

B65D 41/185

[N: with integral internal sealing means]

Definition statement

This subclass/group covers:
Illustrative example of subject matter classified in this group:

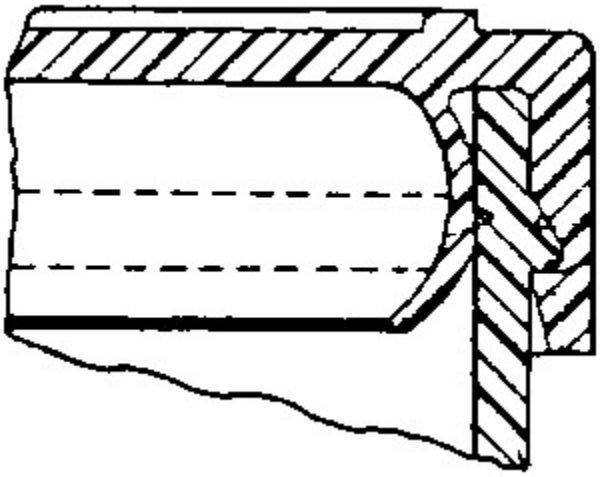

B65D 41/20

Caps or cap-like covers with membranes, e.g. arranged to be pierced

Definition statement

This subclass/group covers:
Illustrative example of subject matter classified in this group:

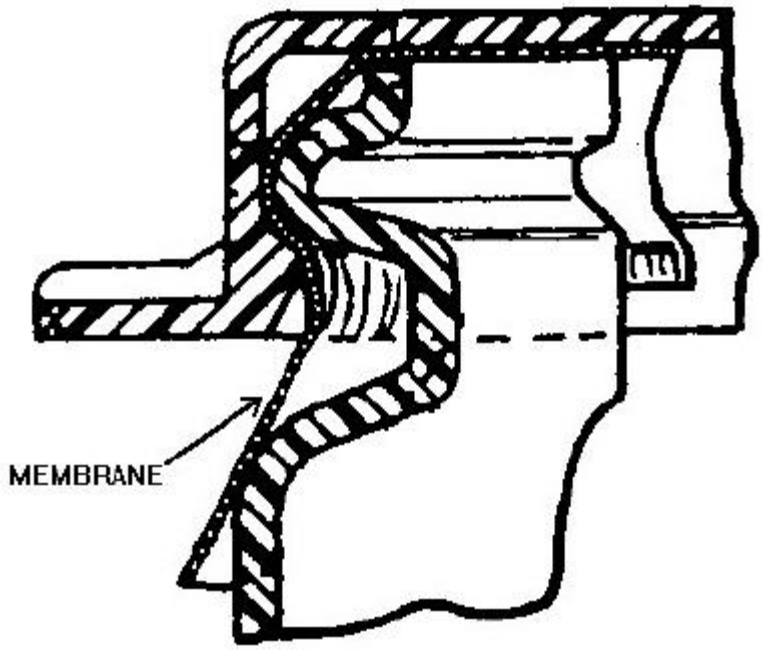

B65D 41/22

Caps or cap-like covers with elastic parts adapted to be stretched over the container

Definition statement

This subclass/group covers:

Illustrative example of subject matter classified in this group:

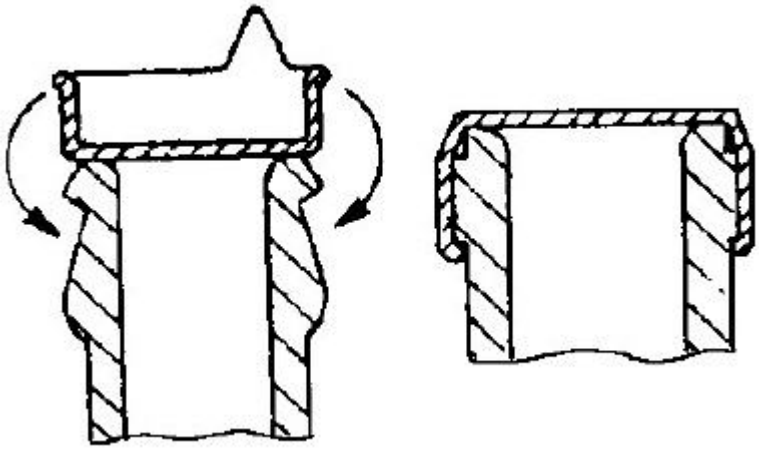

B65D 41/225

[N: with integral internal sealing means]

Definition statement

This subclass/group covers:

Illustrative example of subject matter classified in this group:

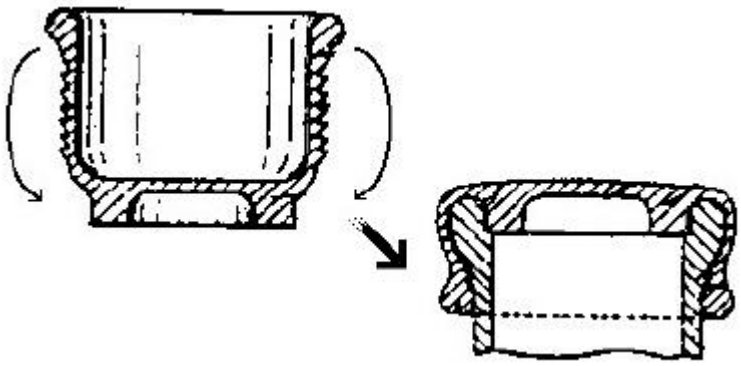

B65D 41/24

Caps or cap-like covers made of shrinkable material or formed in situ by dipping, e.g. using gelatine or celluloid

Definition statement

This subclass/group covers:

Illustrative example of subject matter classified in this group:

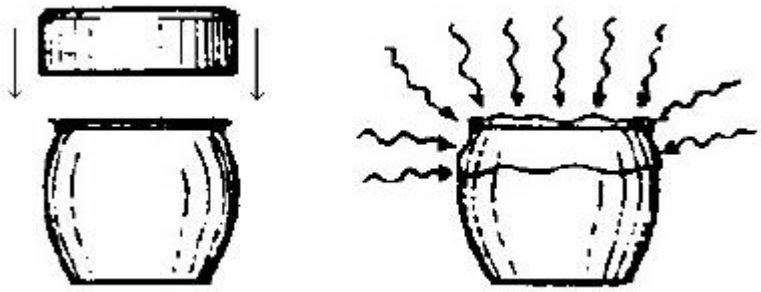

B65D 41/26

Caps or cap-like covers serving as, or incorporating, drinking or measuring vessels

Definition statement

This subclass/group covers:

Illustrative example of subject matter classified in this group:

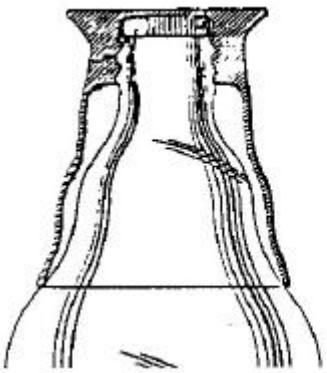

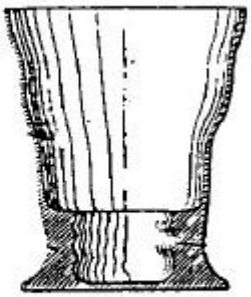

References relevant to classification in this group

This subclass/group does not cover:

Measuring-cups	G01F 19/00
Box-like containers	B65D 2543/00055

B65D 41/28

Caps combined with stoppers

Definition statement

This subclass/group covers:

Illustrative example of subject matter classified in this group:

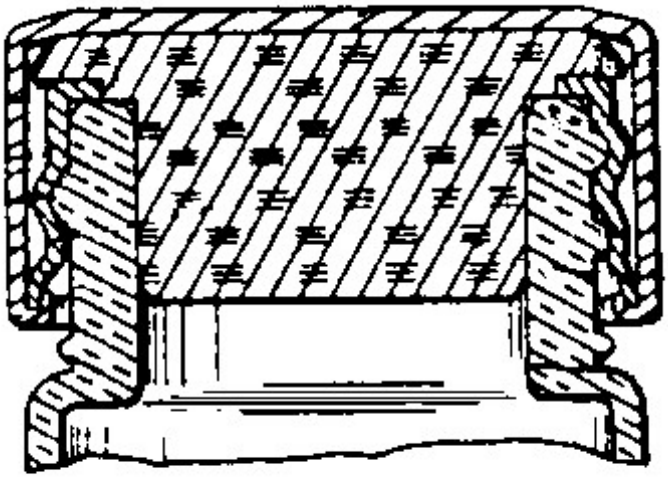

References relevant to classification in this group

This subclass/group does not cover:

Test tube stoppers	**B01L3/14C**

Informative references

Attention is drawn to the following places, which may be of interest for search:

Threaded or like closure members secured by rotation with handles or other special means facilitating manual actuation	B65D 39/16
Arrangements of closures with protective outer cap-like covers or of two or more co-operating closures	B65D 51/18

B65D 41/30

Deformable caps combined with resilient stoppers to permit re-use as temporary closures

Definition statement

This subclass/group covers:

Illustrative example of subject matter classified in this group:

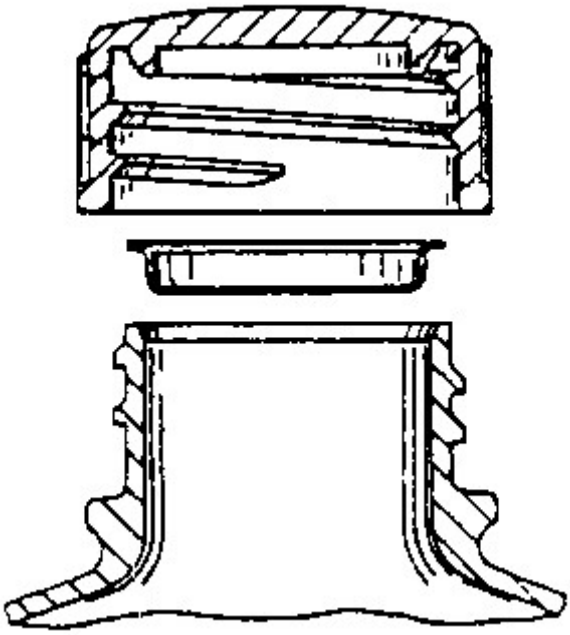

B65D 41/325

[N: with integral internal sealing means]

Definition statement

This subclass/group covers:
Sealing means contacting the internal surface of a container neck.

B65D 41/34

Threaded or like caps or cap-like covers [N: provided with tamper elements formed in, or attached to, the closure skirt]

Definition statement

This subclass/group covers:
Known or obvious details about sealing elements.

References relevant to classification in this group

This subclass/group does not cover:

Sealing elements	B65D 41/0407, B65D 41/0435

B65D 41/3409

[N: the tamper element being integrally connected to the closure by means of bridges]

Definition statement

This subclass/group covers:
Illustrative examples of subject matter classified in this group.

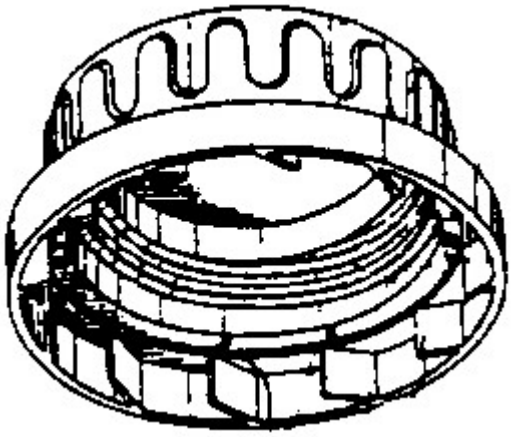

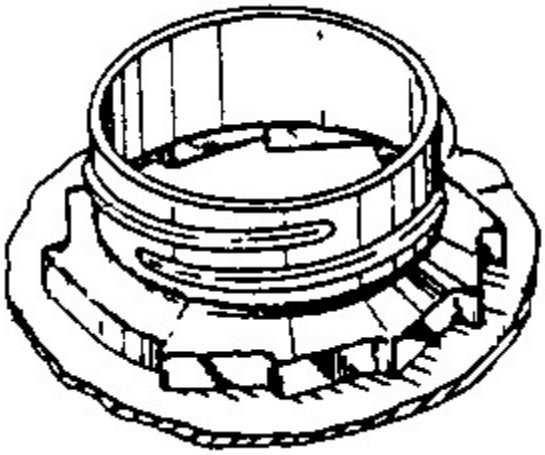

B65D 41/3414

[N: with drive means between closure and tamper element]

Definition statement

This subclass/group covers:
Illustrative example of subject matter classified in this group:

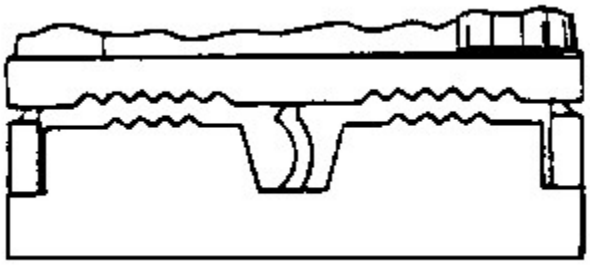

B65D 41/3419

[N: the tamper element being formed separately but connected to the closure]

Definition statement

This subclass/group covers:

Illustrative example of subject matter classified in this group:

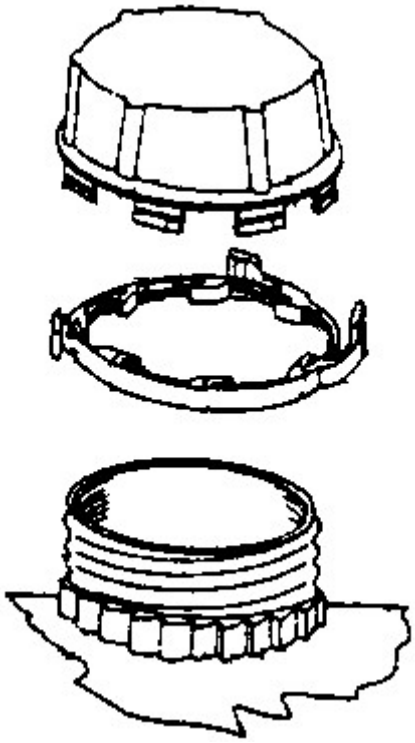

B65D 41/3423

[N: with flexible tabs, or elements rotated from a non-engaging to an engaging position, formed on the tamper element or in the closure skirt (B65D 41/3404 takes precedence)]

Definition statement

This subclass/group covers:

Illustrative example of subject matter classified in this group:

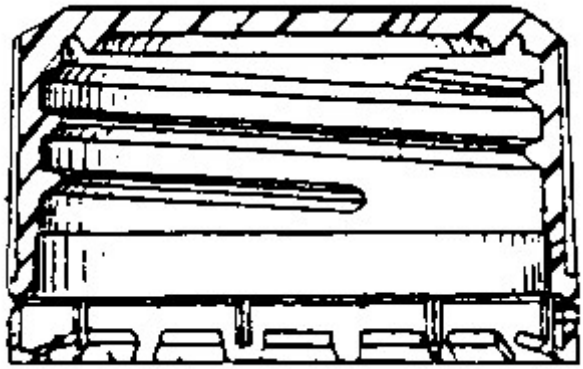

B65D 41/3428

[N: the tamper element being integrally connected to the closure by means of bridges]

Definition statement

This subclass/group covers:

Illustrative example of subject matter classified in this group:

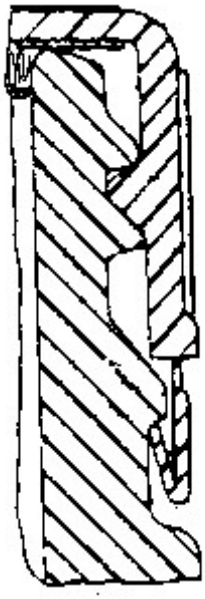

B65D 41/3438

[N: the tamper element being formed separately but connected to the closure]

Definition statement

This subclass/group covers:

Illustrative example of subject matter classified in this group:

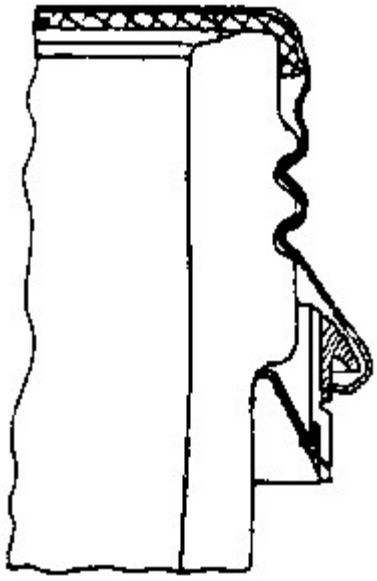

B65D 41/3442

[N: with rigid bead or projections formed on the tamper element and coacting with bead or projections on the container (B65D 41/3404 takes precedence)]

Definition statement

This subclass/group covers:

Illustrative example of subject matter classified in this group:

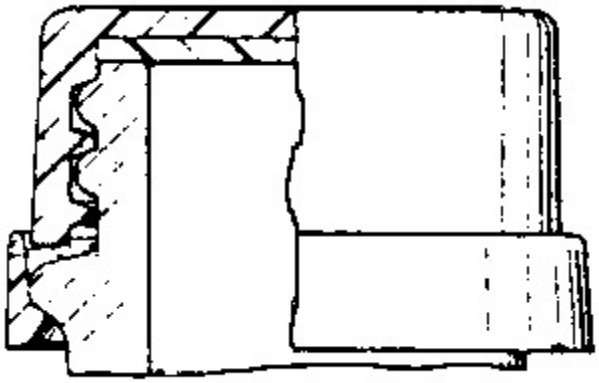

B65D 41/3457

[N: the tamper element being formed separately but connected to the closure]

Definition statement

This subclass/group covers:

Illustrative example of subject matter classified in this group:

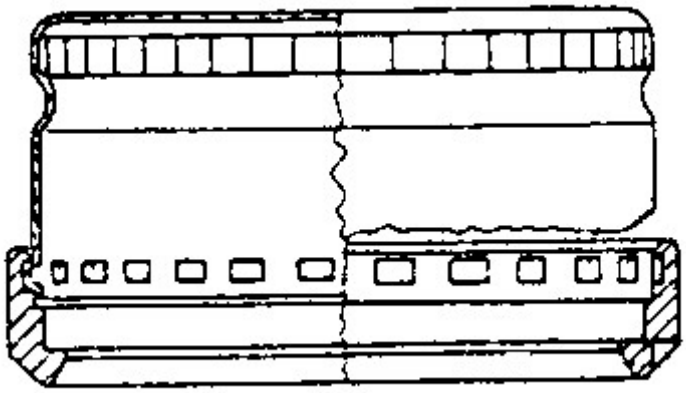

B65D 41/3461

[N: the tamper element being retracted by heat or by heat and pressure]

Definition statement

This subclass/group covers:

Illustrative example of subject matter classified in this group:

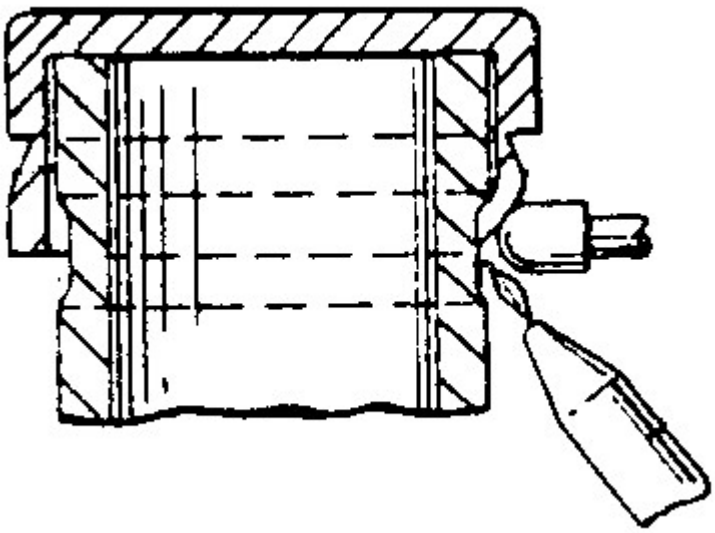

B65D 41/3466

[N: and being integrally connected to the closure by means of bridges]

Definition statement

This subclass/group covers:

Illustrative example of subject matter classified in this group:

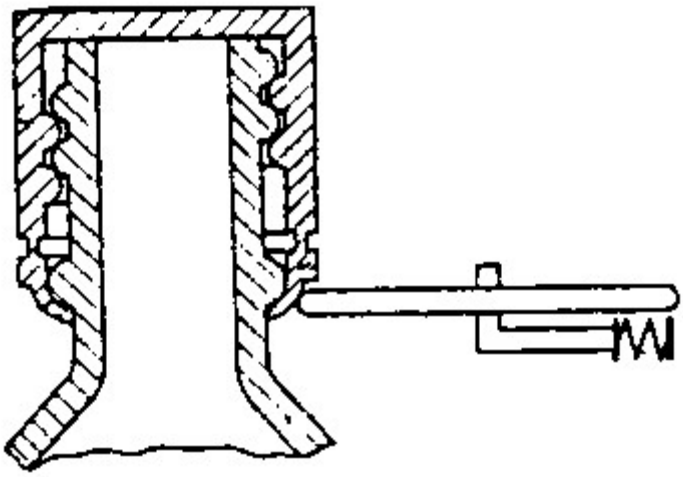

B65D 41/3476

[N: and being formed separately but connected to the closure]

Definition statement

This subclass/group covers:

Illustrative example of subject matter classified in this group:

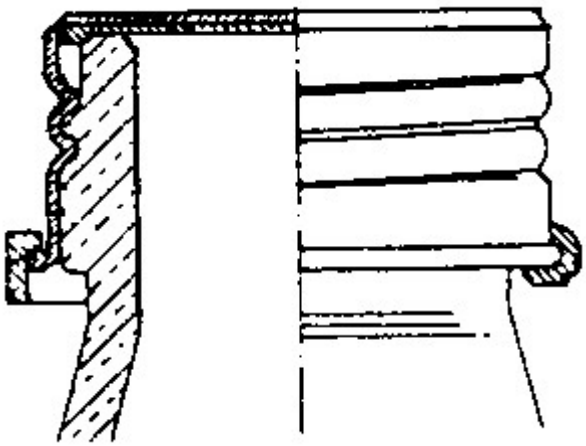

B65D 41/348

[N: the tamper element being rolled or pressed to conform to the shape of the container, e.g. metallic closures (B65D 41/3404, B65D 41/3423 take precedence)]

Definition statement

This subclass/group covers:
Illustrative example of subject matter classified in this group:

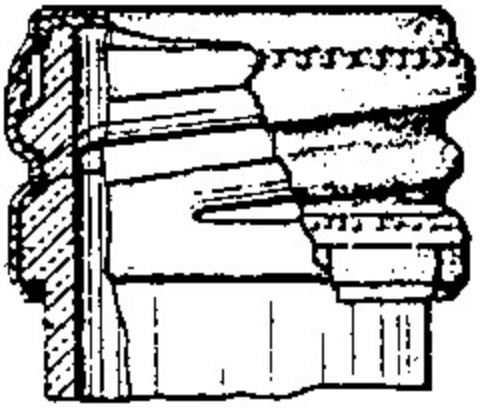

B65D 41/3485

[N: having tear-off strips]

Definition statement

This subclass/group covers:
Illustrative example of subject matter classified in this group (US3363793).

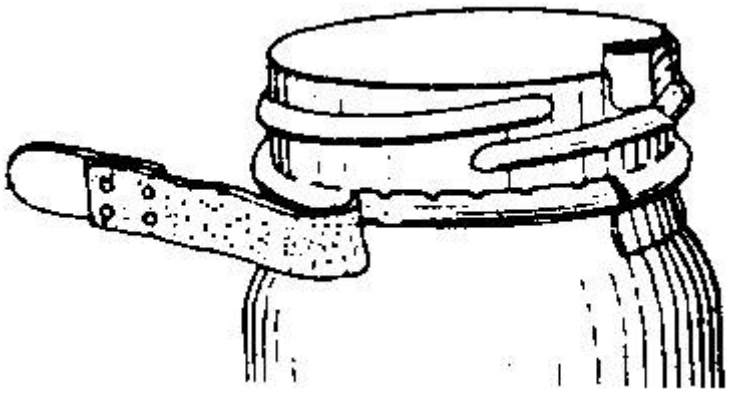

B65D 41/349

[N: the tamper element being formed separately but

connected to the closure]

Definition statement

This subclass/group covers:
Illustrative example of subject matter classified in this group:

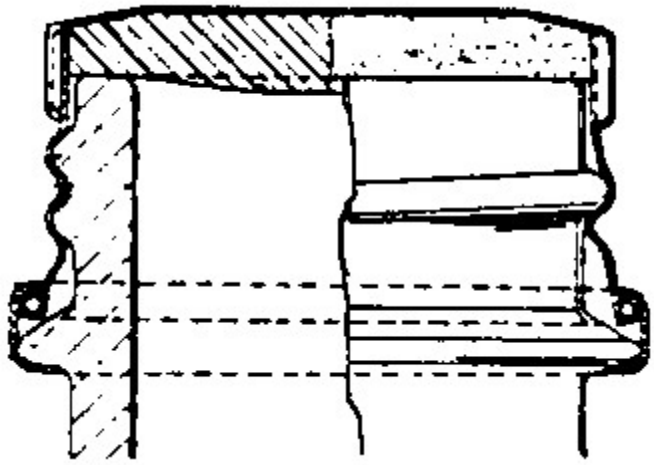

B65D 41/3495

[N: the tamper element being bonded or adhered to the container wall (B65D 41/3461 takes precedence)]

Definition statement

This subclass/group covers:
Illustrative example of subject matter classified in this group:

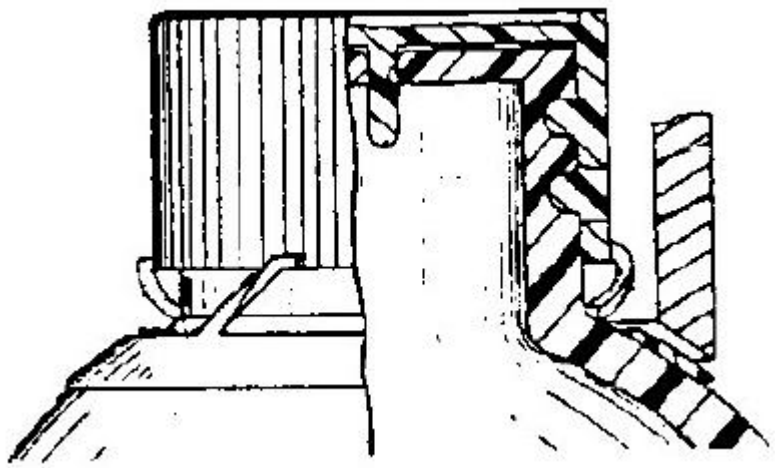

B65D 41/36

with bayonet cams, [N: i.e. removed by first pushing axially to disengage the cams and then rotating]

Definition statement

This subclass/group covers:

Illustrative example of subject matter classified in this group:

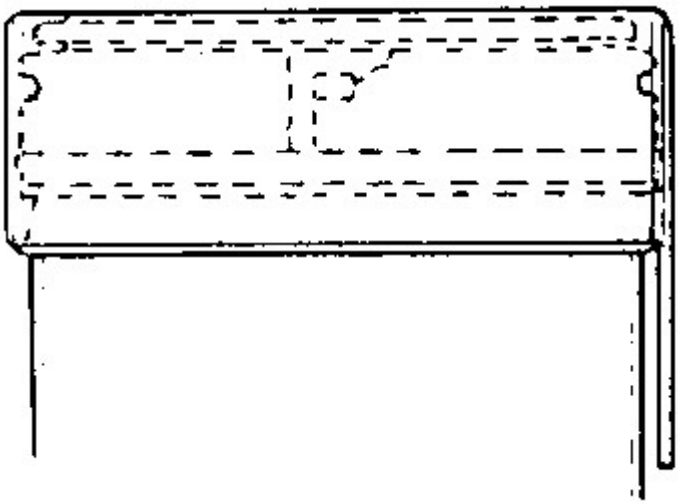

B65D 41/38

engaging a threaded ring clamped on the external periphery of the neck or wall

Definition statement

This subclass/group covers:

Illustrative example of subject matter classified in this group:

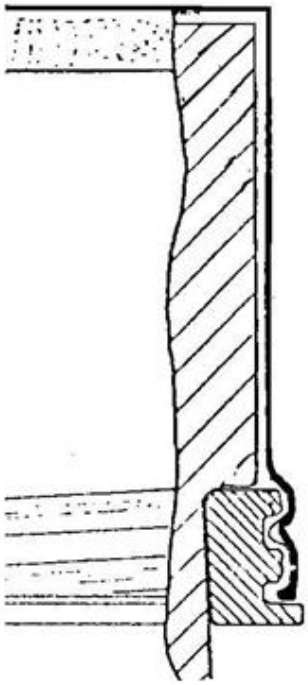

B65D 41/42

made of relatively-stiff metallic material, e.g. crown caps

Definition statement

This subclass/group covers:
Illustrative example of subject matter classified in this group:

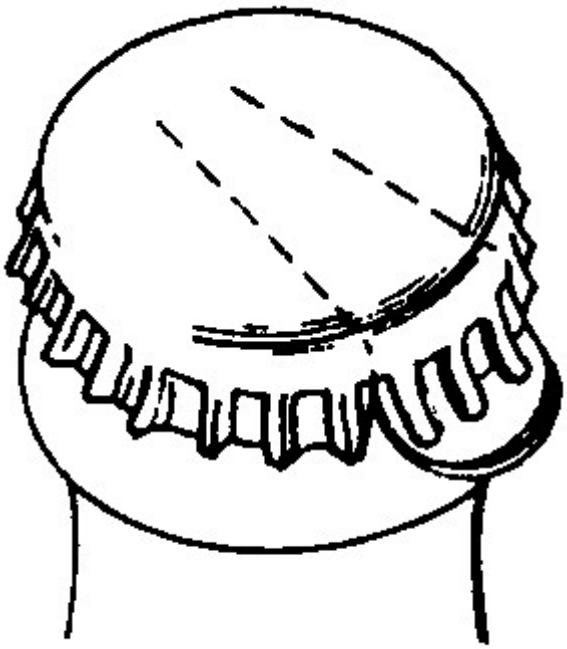

B65D 41/44

made of metallic foil or like thin flexible material

Definition statement

This subclass/group covers:
Illustrative example of subject matter classified in this group:



B65D 41/46

Snap-on caps or cap-like covers

Definition statement

This subclass/group covers:
Illustrative example of subject matter classified in this group:

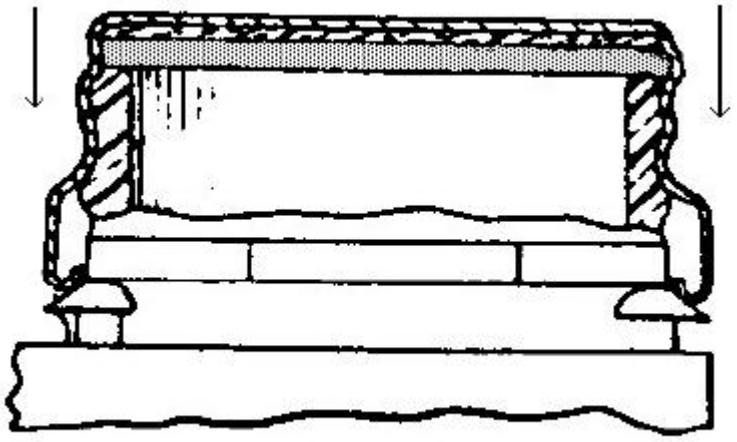

B65D 41/47

push-on and twist-off

Definition statement

This subclass/group covers:
Illustrative example of subject matter classified in this group:

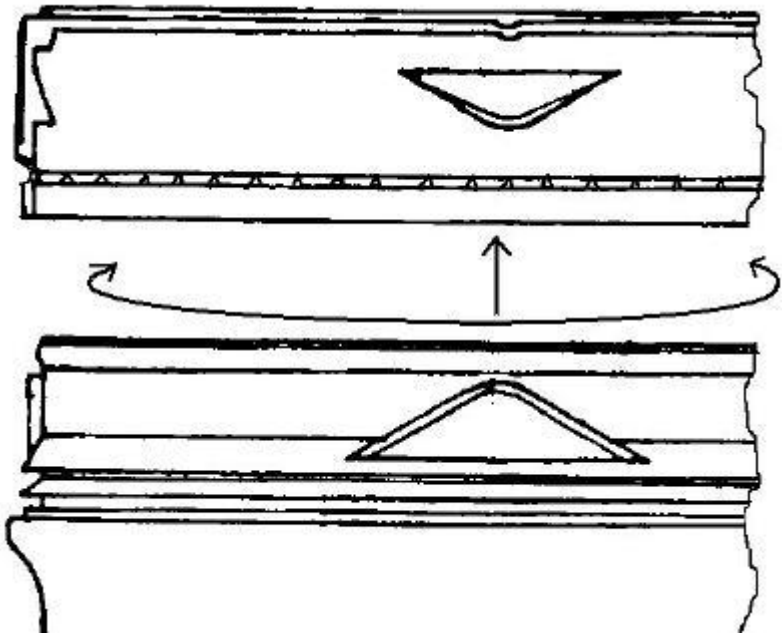

B65D 41/48

non-metallic, e.g. made of paper, plastics [N: (B65D 41/47 takes precedence)]

Definition statement

This subclass/group covers:
Illustrative example of subject matter classified in this group:

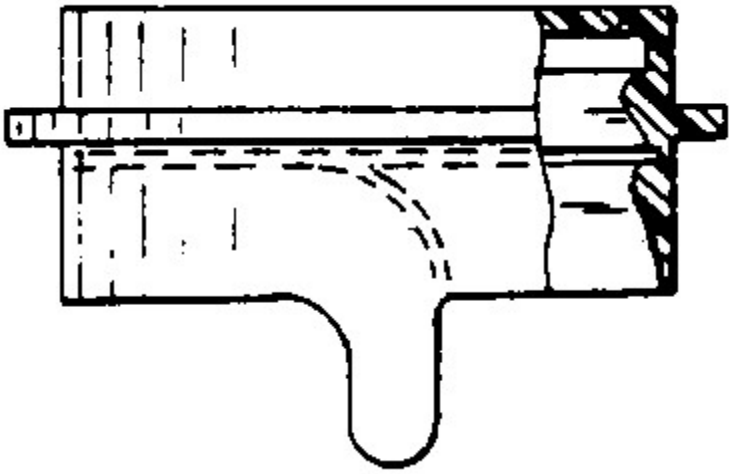

B65D 41/485

[N: with integral internal sealing means]

Definition statement

This subclass/group covers:
Illustrative example of subject matter classified in this group:

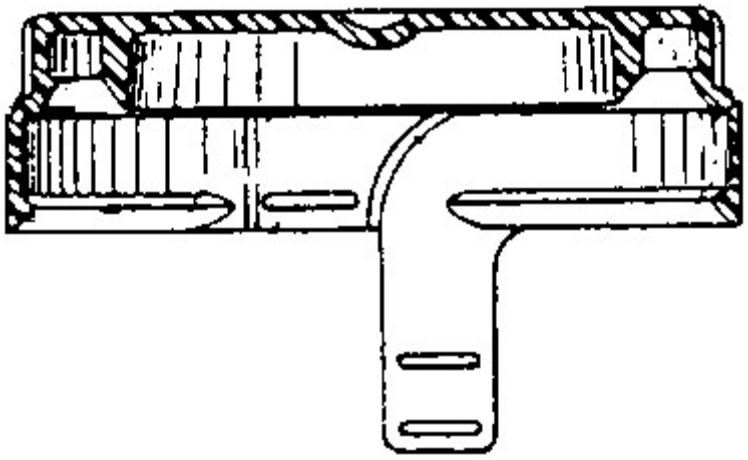

B65D 41/50

Caps or cap-like covers with membranes, e.g. arranged to be pierced

Definition statement

This subclass/group covers:

Illustrative example of subject matter classified in this group:

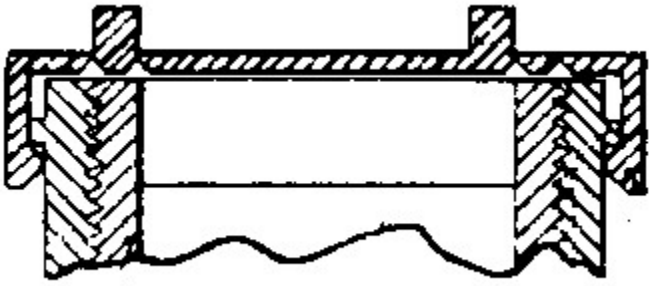

Informative references

Attention is drawn to the following places, which may be of interest for search:

The bottle or container being held upside down and provided with a closure	B67D 3/0032

B65D 41/52

Caps or cap-like covers with elastic parts adapted to be stretched over the container

Definition statement

This subclass/group covers:

Illustrative example of subject matter classified in this group:

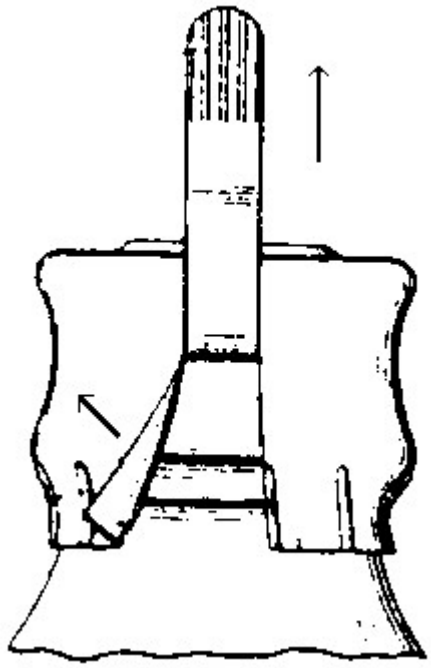

B65D 41/54

Caps or cap-like covers made of shrinkable material or formed in situ by dipping, e.g. using gelatine, celluloid

Definition statement

This subclass/group covers:

Illustrative example of subject matter classified in this group:

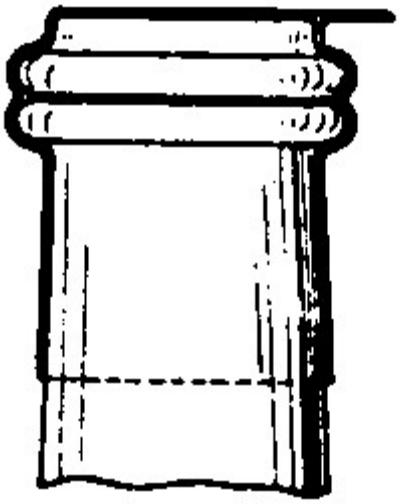

References relevant to classification in this group

This subclass/group does not cover:

Shrink-film bands	B65D 55/0854

B65D 41/56

Caps or cap-like covers serving as, or incorporating, drinking or measuring vessels

References relevant to classification in this group

This subclass/group does not cover:

Measuring-cups	G01F 19/00
Box-like containers	B65D 2543/00055

B65D 41/565

[N: with integral internal sealing means]

Definition statement

This subclass/group covers:
Illustrative example of subject matter classified in this group:

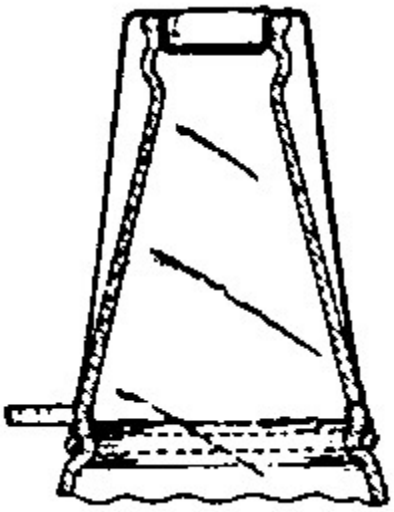

B65D 41/58

Caps or cap-like covers combined with stoppers

Definition statement

This subclass/group covers:

Illustrative example of subject matter classified in this group:

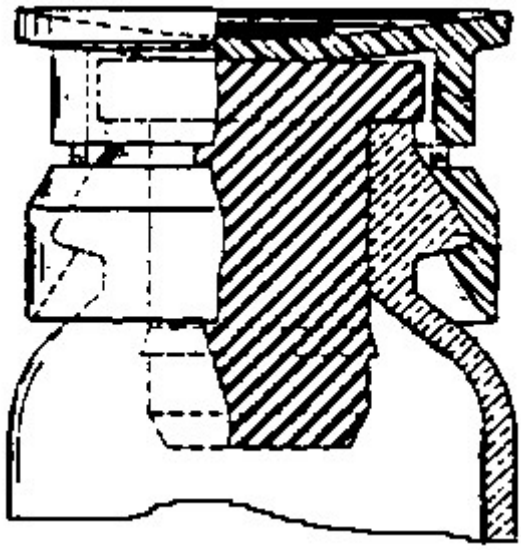

References relevant to classification in this group

This subclass/group does not cover:

Arrangements of closures with protective outer cap-like covers or of two or more co-operating closures	B65D 51/18

Informative references

Attention is drawn to the following places, which may be of interest for search:

Closures arranged within necks or pouring openings or in discharge apertures with handles or other special means facilitating manual actuation	B65D 39/16

B65D 41/60

Deformable caps combined with resilient stoppers to permit re-use as temporary closures

Definition statement

This subclass/group covers:

Illustrative example of subject matter classified in this group:

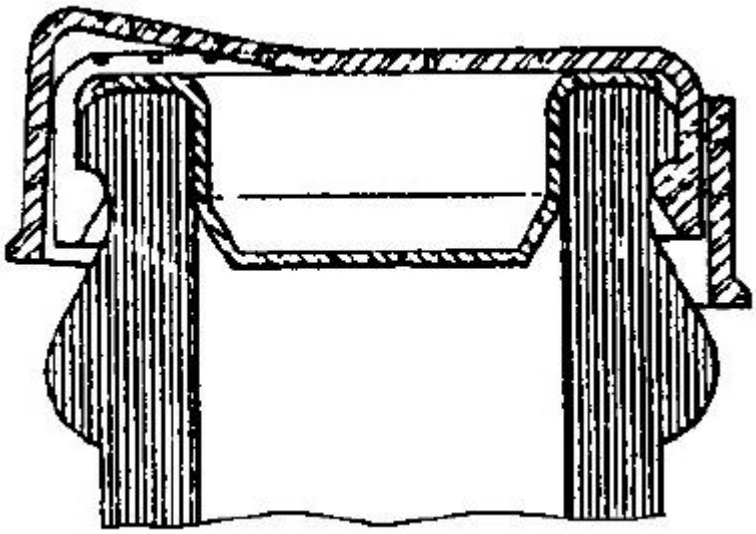

B65D 41/62

Secondary protective cap-like outer covers for closure members (arrangements of closures with protective outer cap-like covers or of two or more co-operating closures B65D 51/18)

Definition statement

This subclass/group covers:

Illustrative example of subject matter classified in this group:

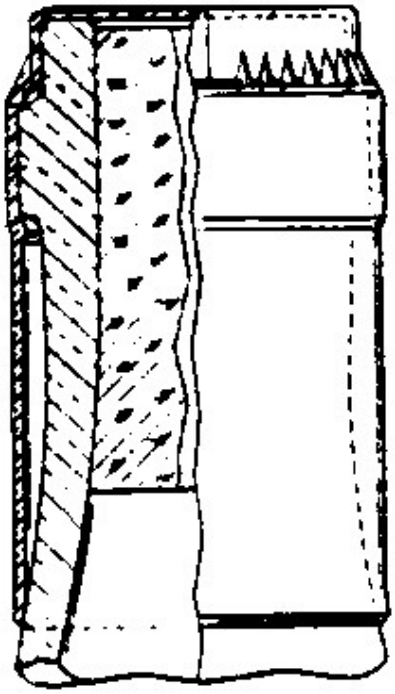

B65D 43/00

Lids or covers for rigid or semi-rigid containers (for cooking vessels A47J 36/06; covers for pressure vessels in general F16J 13/00)

B65D 43/02

Removable lids or covers (with means for piercing, cutting, or tearing a frangible inner closure B65D 51/22)

References relevant to classification in this group

This subclass/group does not cover:

Flexible covers with elastic parts adapted to be stretched over the container	B65D 41/22, B65D 41/52
Flexible lids or covers welded or glued to the container body	B65D 77/20
Covers or lids for paint cans	B44D 3/127
Removable closures for access or drainage openings	B62D 25/24

B65D 43/0204

[N: secured by snapping over beads or projections]

Definition statement

This subclass/group covers:
Illustrative example of subject matter classified in this group:

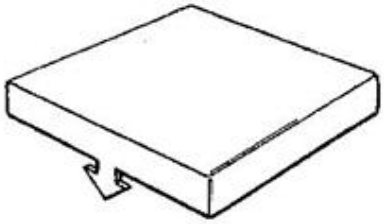

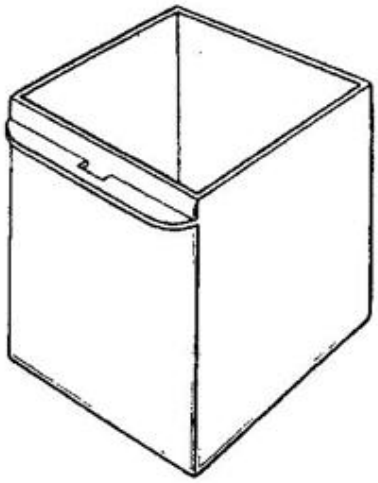

Special rules of classification within this group

The use of available Indexing Codes is mandatory.

B65D 43/0206

[N: inside a peripheral U-shaped channel in the mouth of the container]

Definition statement

This subclass/group covers:
Illustrative example of subject matter classified in this group:

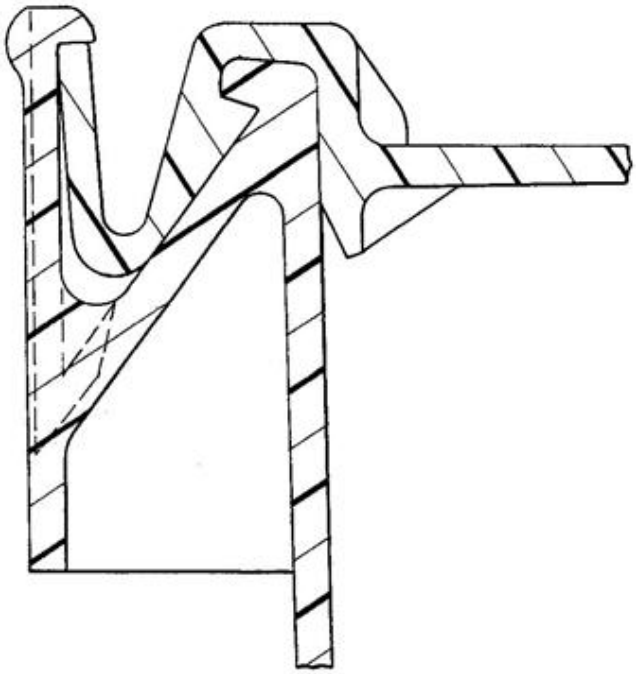

Special rules of classification within this group

The use of available Indexing Codes is mandatory.

B65D 43/0208

[N: on both the inside and the outside of the mouth of the container (B65D 43/0206 takes precedence)]

Definition statement

This subclass/group covers:

Illustrative example of subject matter classified in this group:

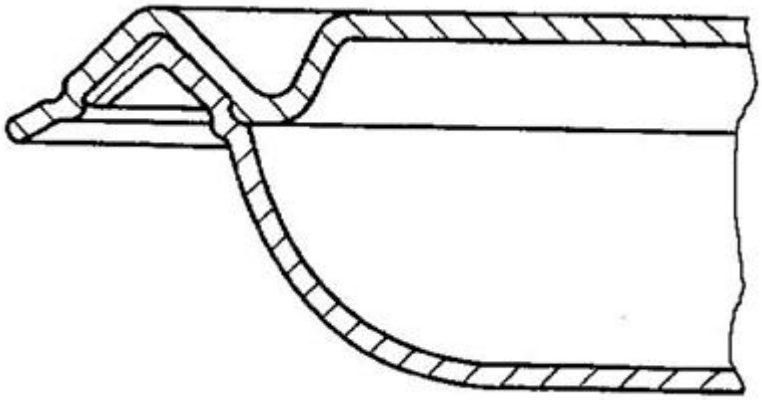

Special rules of classification within this group

The use of available Indexing Codes is mandatory.

B65D 43/021

[N: only on the inside, or a part turned to the inside, of the mouth (B65D 43/0206 takes precedence)]

Definition statement

This subclass/group covers:

Illustrative example of subject matter classified in this group:

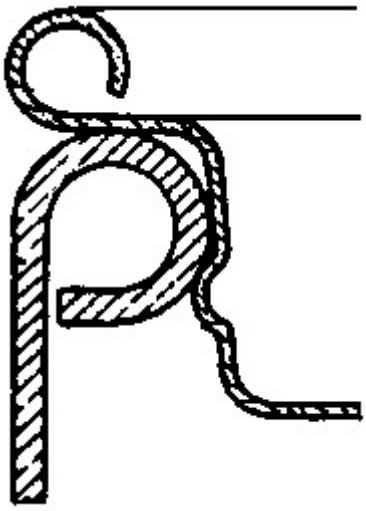

Special rules of classification within this group

The use of available Indexing Codes is mandatory.

B65D 43/0212

[N: only on the outside, or a part turned to the outside, of the mouth (B65D 43/0206 takes precedence)]

Definition statement

This subclass/group covers:

Illustrative example of subject matter classified in this group:

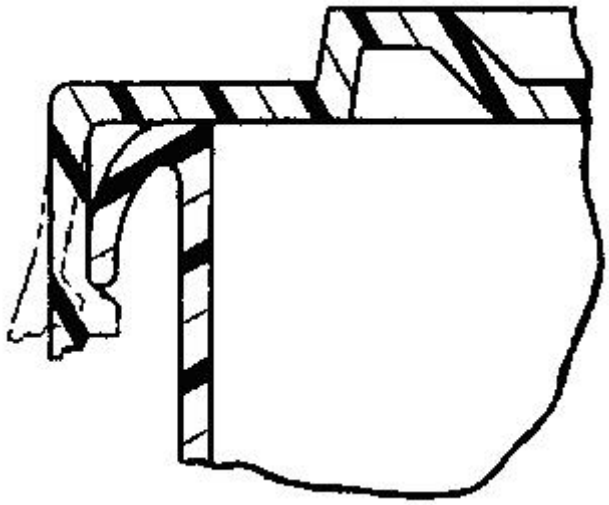

Special rules of classification within this group

The use of available Indexing Codes is mandatory.

B65D 43/0214

[N: secured only by friction or gravity (B65D 43/0204 takes precedence)]

Definition statement

This subclass/group covers:
Illustrative example of subject matter classified in this group:

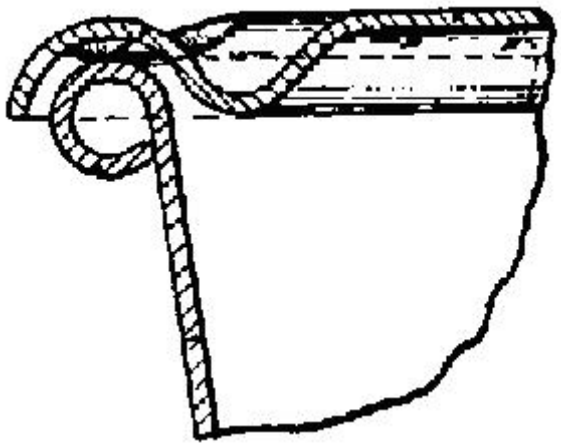

Special rules of classification within this group

The use of available Indexing Codes is mandatory.

B65D 43/0216

[N: inside a peripheral U-shaped channel in the mouth of the container]

Definition statement

This subclass/group covers:
Illustrative example of subject matter classified in this group:

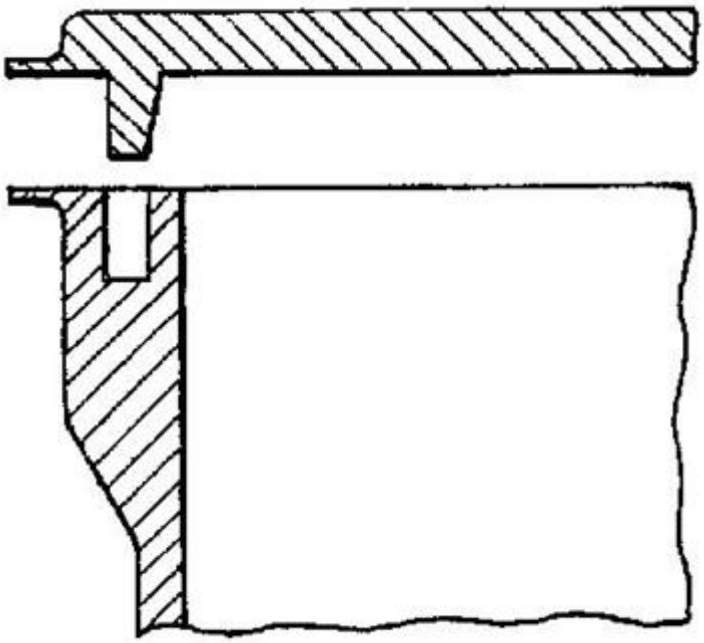

Special rules of classification within this group

The use of available Indexing Codes is mandatory.

B65D 43/0218

[N: on both the inside and the outside of the mouth of the container (B65D 43/0216 takes precedence)]

Definition statement

This subclass/group covers:
Illustrative example of subject matter classified in this group:

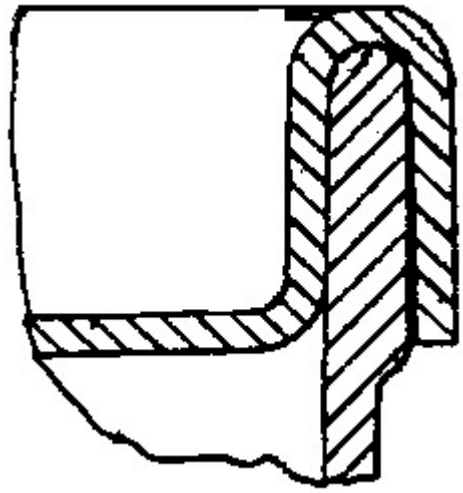

Special rules of classification within this group

The use of available Indexing Codes is mandatory.

B65D 43/022

[N: only on the inside, or a part turned to the inside, of the mouth of the container (B65D 43/0216 takes precedence)]

Definition statement

This subclass/group covers:
Illustrative example of subject matter classified in this group:

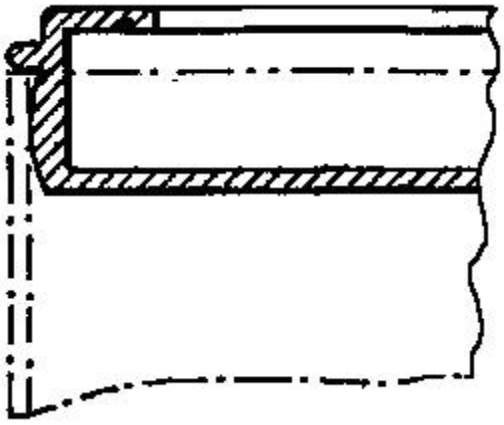

Special rules of classification within this group

The use of available Indexing Codes is mandatory.

B65D 43/0222

[N: only on the outside, or a part turned to the outside, of the mouth of the container (B65D 43/0216 takes precedence)]

Definition statement

This subclass/group covers:

Illustrative example of subject matter classified in this group:

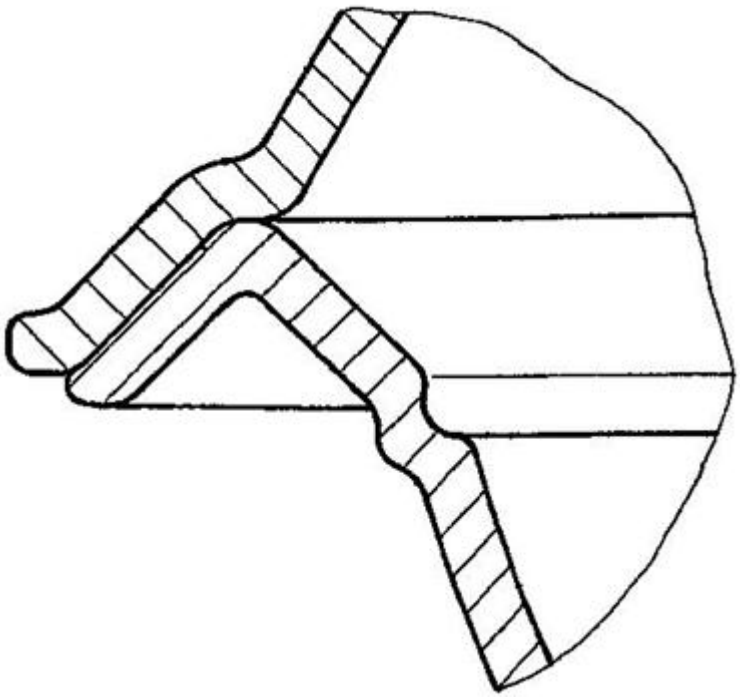

Special rules of classification within this group

The use of available Indexing Codes is mandatory.

B65D 43/0225

[N: secured by rotation]

Special rules of classification within this group

The use of available Indexing Codes is mandatory.

B65D 43/0227

[N: inside a peripheral U-shaped channel in the mouth of the container]

Definition statement

This subclass/group covers:
Illustrative example of subject matter classified in this group:

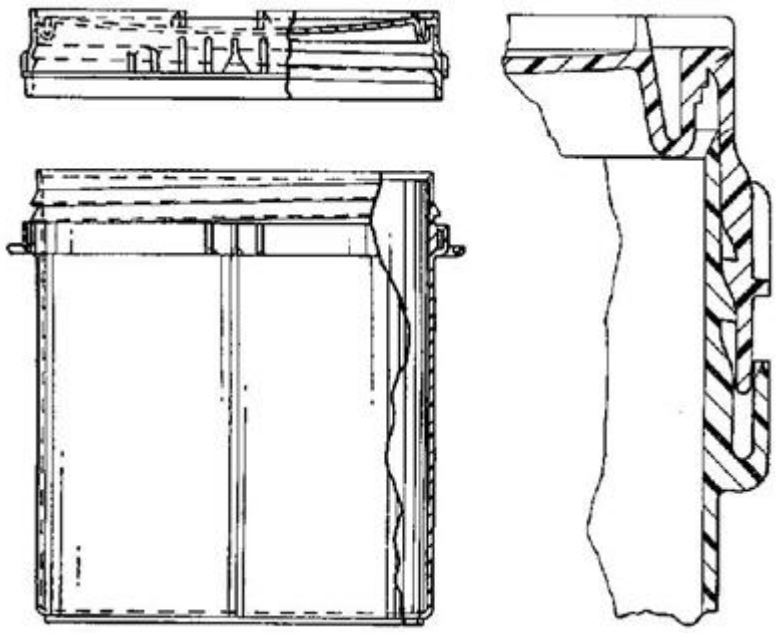

Special rules of classification within this group

The use of available Indexing Codes is mandatory.

B65D 43/0229

[N: only on the inside, or a part turned to the inside, of the mouth of the container (B65D 43/0227 takes precedence)]

Definition statement

This subclass/group covers:
Illustrative example of subject matter classified in this group:

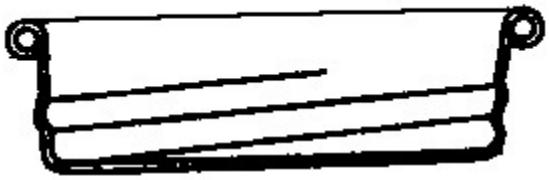

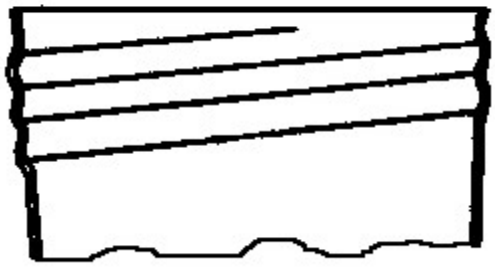

Special rules of classification within this group

The use of available Indexing Codes is mandatory.

B65D 43/0231

[N: only on the outside, or a part turned to the outside, of the mouth of the container (B65D 43/0227 takes precedence)]

Definition statement

This subclass/group covers:
Illustrative example of subject matter classified in this group:

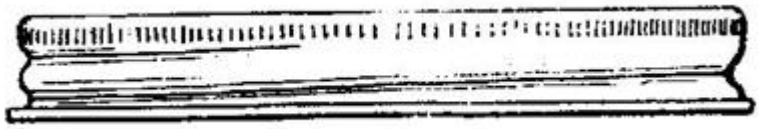

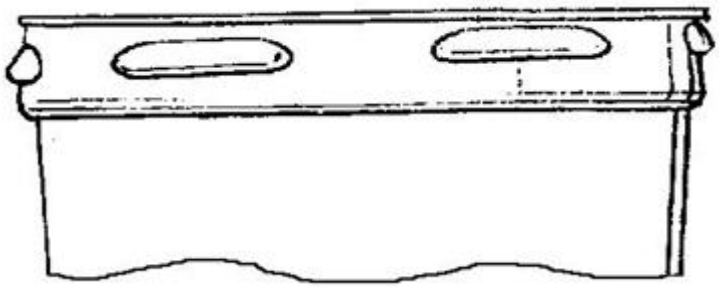

Special rules of classification within this group

The use of available Indexing Codes is mandatory.

B65D 43/0233

[N: secured by rolling or other plastic deformation]

Definition statement

This subclass/group covers:
Illustrative example of subject matter classified in this group:

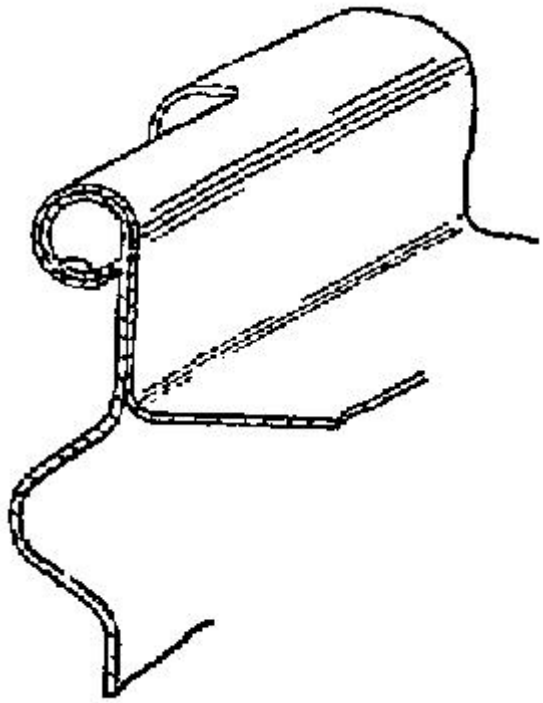

Informative references

Attention is drawn to the following places, which may be of interest for search:

Closures secured by folding or rolling and pressing	B65D 17/08

Special rules of classification within this group

The use of available Indexing Codes is mandatory.

B65D 43/0235

[N: with integral tamper element]

References relevant to classification in this group

This subclass/group does not cover:

Tamper element integral with the container	B65D 43/0202, B65D 2101/0015

Special rules of classification within this group

The use of available Indexing Codes is mandatory.

B65D 43/0237

[N: secured by snapping over beads or projections before removal of the tamper element]

References relevant to classification in this group

This subclass/group does not cover:

Tamper element integral with the container	B65D 43/0202, B65D 2101/0015

Special rules of classification within this group

The use of available Indexing Codes is mandatory.

B65D 43/0239

[N: inside a peripheral U-shaped channel in the mouth of the container]

Definition statement

This subclass/group covers:

Illustrative example of subject matter classified in this group:

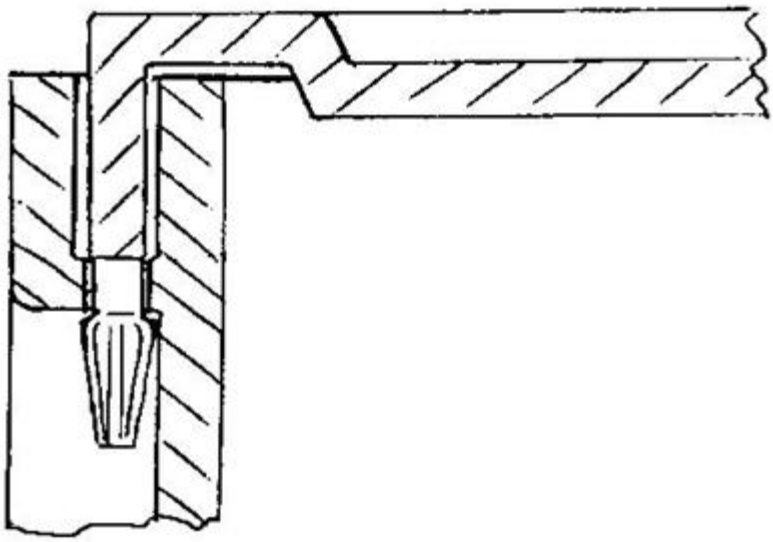

Special rules of classification within this group

The use of available Indexing Codes is mandatory.

B65D 43/0241

[N: leaving only an inside snap after removal of the tamper element]

Definition statement

This subclass/group covers:

Illustrative example of subject matter classified in this group:

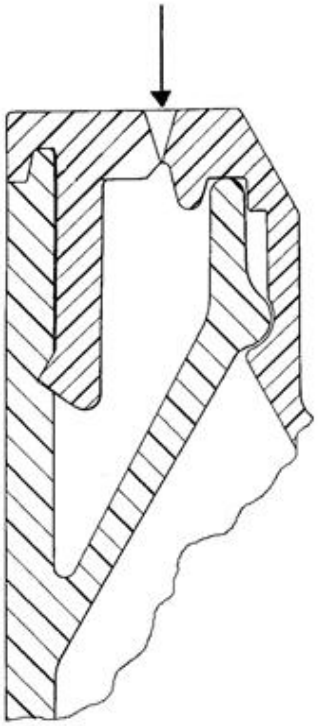

Special rules of classification within this group

The use of available Indexing Codes is mandatory.

B65D 43/0243

[N: leaving friction on both the inside and the outside after removal of the tamper element]

Special rules of classification within this group

The use of available Indexing Codes is mandatory.

B65D 43/0245

[N: leaving only an inside friction after removal of the tamper element]

Special rules of classification within this group

The use of available Indexing Codes is mandatory.

B65D 43/0247

[N: leaving only an outside friction after removal of the tamper element]

Special rules of classification within this group

The use of available Indexing Codes is mandatory.

B65D 43/0249

[N: on both the inside and the outside of the mouth of the container (B65D 43/0239 takes precedence)]

Definition statement

This subclass/group covers:

Illustrative example of subject matter classified in this group:

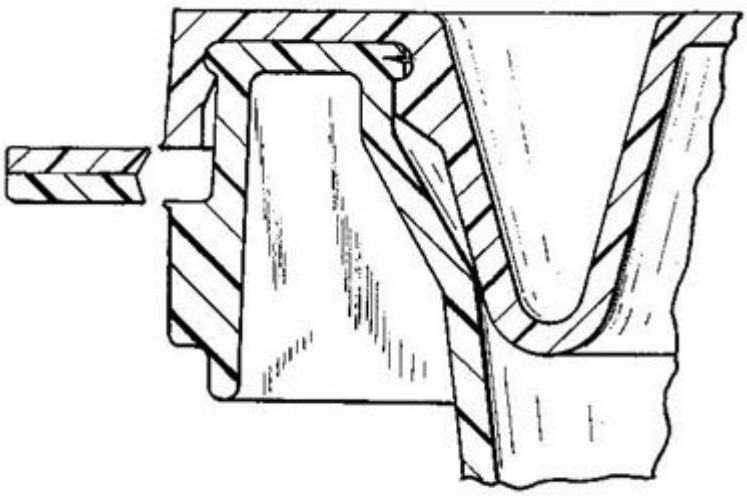

Special rules of classification within this group

The use of available Indexing Codes is mandatory.

B65D 43/0252

[N: leaving only an inside snap after removal of the tamper element]

Definition statement

This subclass/group covers:

Illustrative example of subject matter classified in this group:

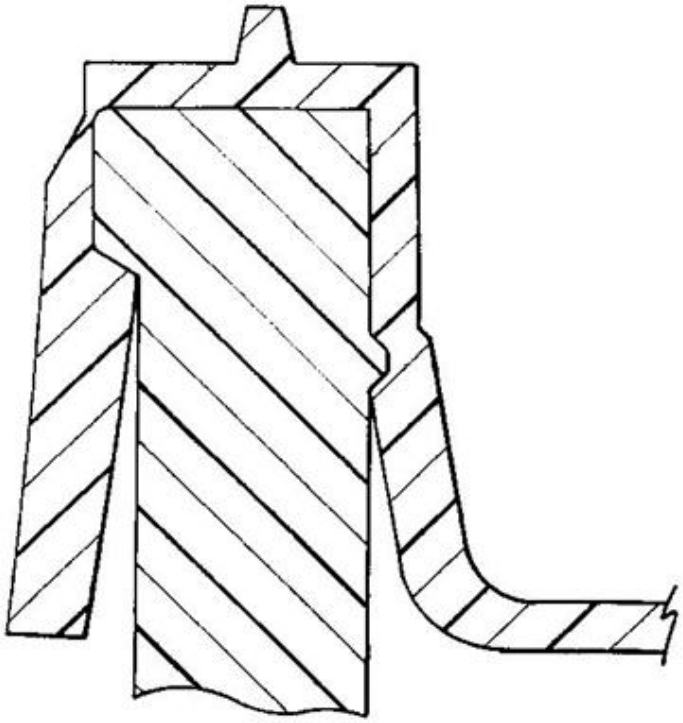

Special rules of classification within this group

The use of available Indexing Codes is mandatory.

B65D 43/0254

[N: only on the inside, or a part turned to the inside, of the mouth of the container (B65D 43/0239 takes precedence)]

Definition statement

This subclass/group covers:

Illustrative example of subject matter classified in this group:

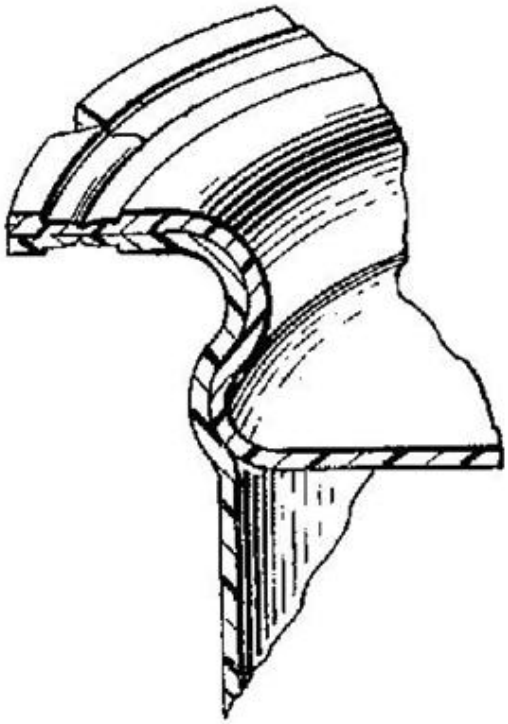

Special rules of classification within this group

The use of available Indexing Codes is mandatory.

B65D 43/0256

[N: only on the outside, or a part turned to the outside, of the mouth of the container (B65D 43/0239 takes precedence)]

Definition statement

This subclass/group covers:

Illustrative example of subject matter classified in this group:

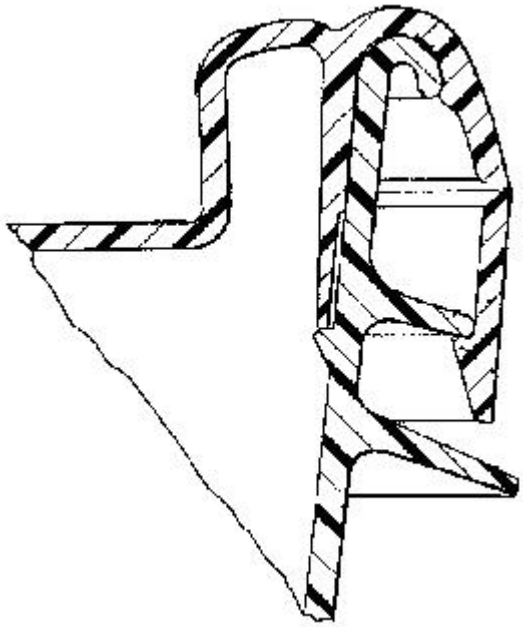

Special rules of classification within this group

The use of available Indexing Codes is mandatory.

B65D 43/0258

[N: leaving friction on both the inside and the outside after removal of the tamper element]

Special rules of classification within this group

The use of available Indexing Codes is mandatory.

B65D 43/026

[N: leaving only an inside friction after removal of the tamper element]

Special rules of classification within this group

The use of available Indexing Codes is mandatory.

B65D 43/0262

[N: leaving only an outside friction after removal of the tamper element]

Special rules of classification within this group

The use of available Indexing Codes is mandatory.

B65D 43/0264

[N: secured only by friction or gravity before removal of the tamper element (B65D 43/0237 takes precedence)]

References relevant to classification in this group

This subclass/group does not cover:

Tamper element integral with the container	B65D 43/0214, B65D 2101/0015

Special rules of classification within this group

The use of available Indexing Codes is mandatory.

B65D 43/0266

[N: inside a peripheral U-shaped channel in the mouth of the container]

Definition statement

This subclass/group covers:

Illustrative example of subject matter classified in this group:

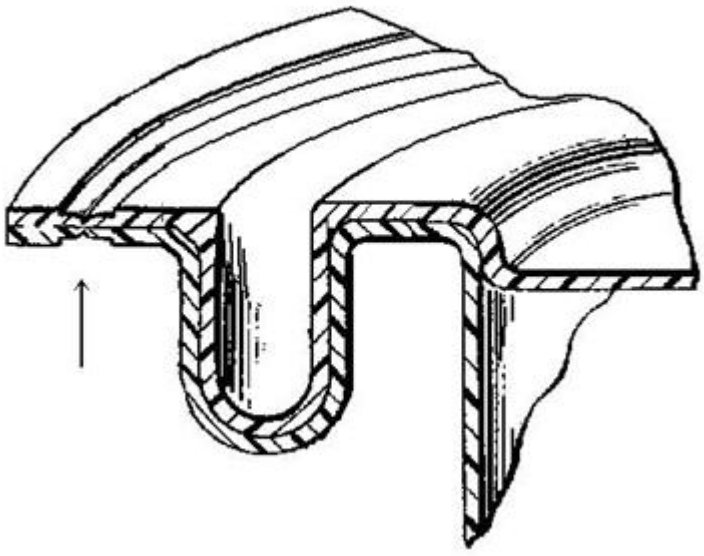

Special rules of classification within this group

The use of available Indexing Codes is mandatory.

B65D 43/0268

[N: on both the inside and the outside of the mouth of the container (B65D 43/0266 takes precedence)]

Definition statement

This subclass/group covers:

Illustrative example of subject matter classified in this group:

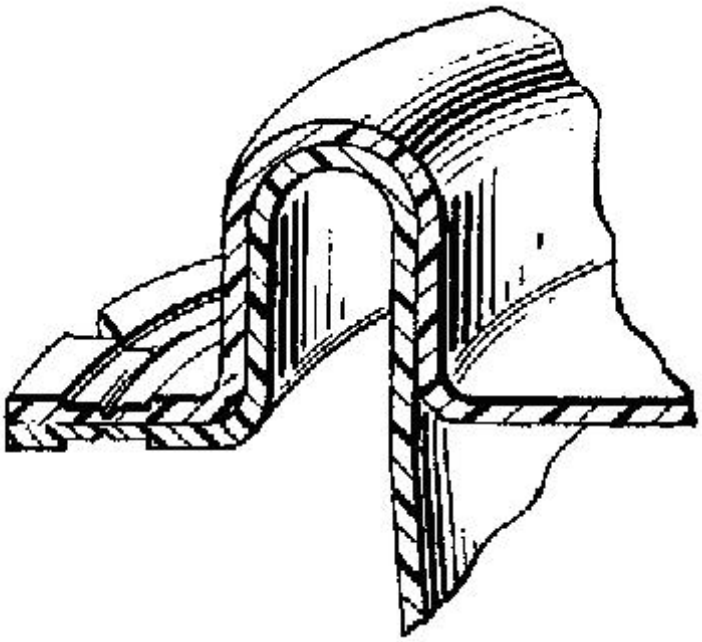

Special rules of classification within this group

The use of available Indexing Codes is mandatory.

B65D 43/027

[N: leaving only an inside friction after removal of the tamper element]

Definition statement

This subclass/group covers:

Illustrative example of subject matter classified in this group:

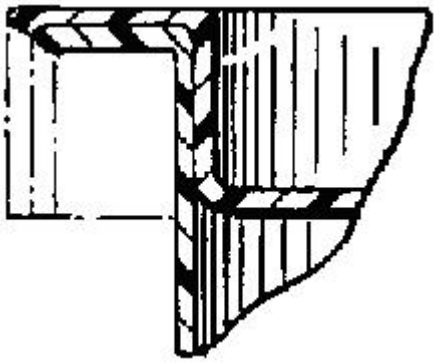

Special rules of classification within this group

The use of available Indexing Codes is mandatory.

B65D 43/0272

[N: only on the inside, or a part turned to the inside, of the mouth of the container (B65D 43/0266 takes precedence)]

Definition statement

This subclass/group covers:
Illustrative example of subject matter classified in this group:

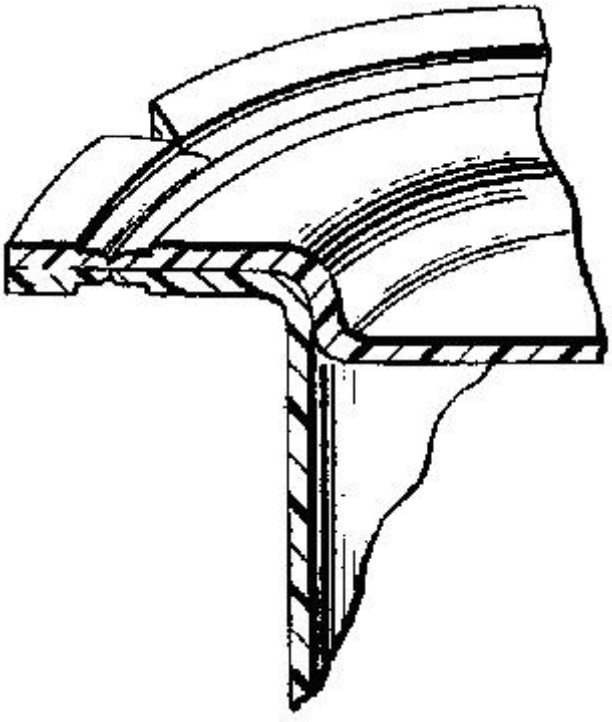

Special rules of classification within this group

The use of available Indexing Codes is mandatory.

B65D 43/0274

[N: only on the outside, or a part turned to the outside, of the mouth of the container (B65D 43/0266 takes precedence)]

Definition statement

This subclass/group covers:

Illustrative example of subject matter classified in this group:

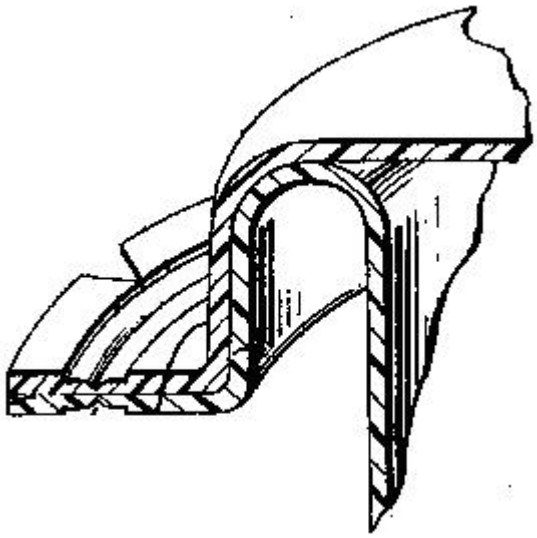

References relevant to classification in this group

This subclass/group does not cover:

Inside a peripheral U-shaped channel in the mouth of the container	B65D 43/0266

Special rules of classification within this group

The use of available Indexing Codes is mandatory.

B65D 43/0277

[N: secured by rotation before removal of the tamper element]

References relevant to classification in this group

This subclass/group does not cover:

Tamper element integral with the container	B65D 43/0225, B65D 2101/0015

Special rules of classification within this group

The use of available Indexing Codes is mandatory.

B65D 43/0283

[N: only on the outside, or a part turned to the outside, of the mouth of the container (B65D 43/0279 takes precedence)]

Definition statement

This subclass/group covers:

Illustrative example of subject matter classified in this group:

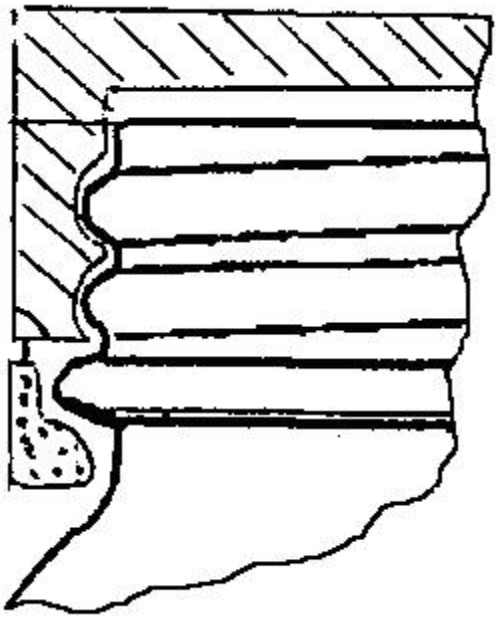

References relevant to classification in this group

This subclass/group does not cover:

Inside a peripheral U-shaped channel in the mouth of the container	B65D 43/0279

Special rules of classification within this group

The use of available Indexing Codes is mandatory.

B65D 43/0289

[N: leaving only an inside snap after removal of the tamper element]

Definition statement

This subclass/group covers:
Illustrative example of subject matter classified in this group:

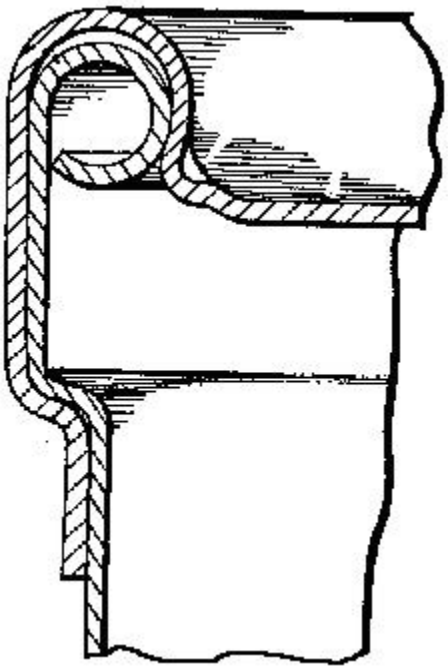

Special rules of classification within this group

The use of available Indexing Codes is mandatory.

B65D 43/0291

[N: leaving only an outside snap after removal of the tamper element]

Definition statement

This subclass/group covers:
Illustrative example of subject matter classified in this group:

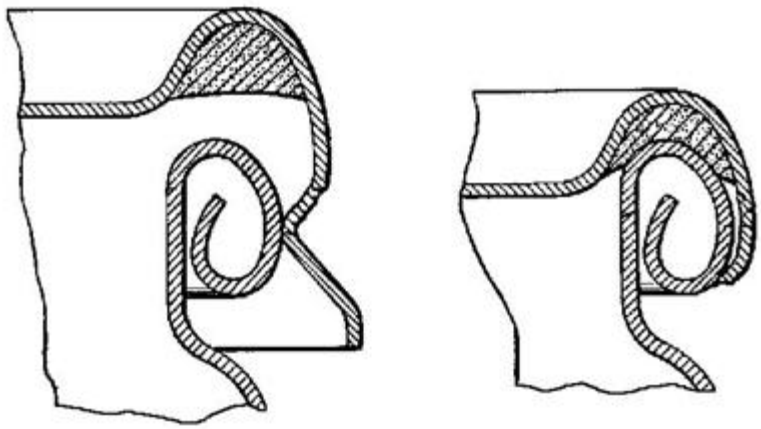

Special rules of classification within this group

The use of available Indexing Codes is mandatory.

B65D 43/0293

[N: leaving friction on both the inside and the outside after removal of the tamper element]

Definition statement

This subclass/group covers:
Illustrative example of subject matter classified in this group:

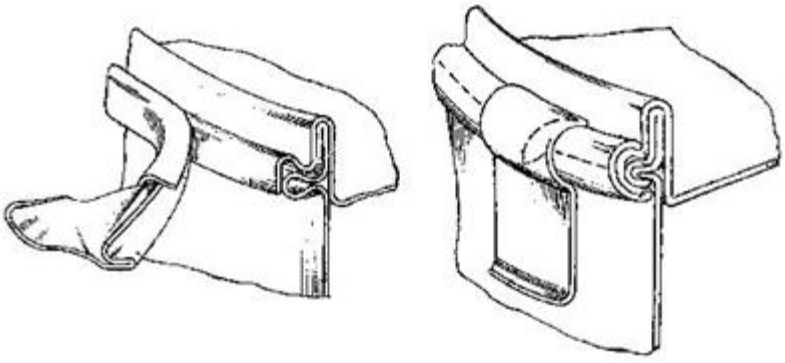

Special rules of classification within this group

The use of available Indexing Codes is mandatory.

B65D 43/0295

[N: leaving only an inside friction after removal of the tamper element]

Definition statement

This subclass/group covers:
Illustrative example of subject matter classified in this group:

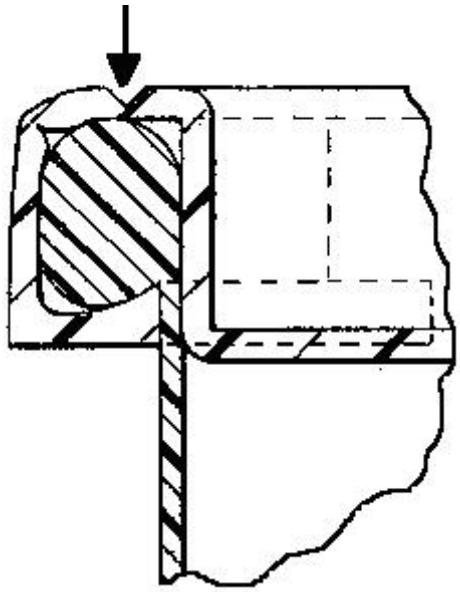

Special rules of classification within this group

The use of available Indexing Codes is mandatory.

B65D 43/0297

[N: leaving only an outside friction after removal of the tamper element]

Definition statement

This subclass/group covers:
Illustrative example of subject matter classified in this group:

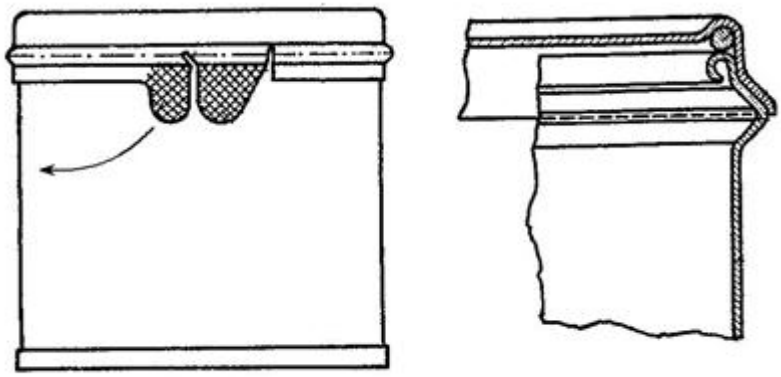

Special rules of classification within this group

The use of available Indexing Codes is mandatory.

B65D 43/12

guided for removal by sliding

Definition statement

This subclass/group covers:
Illustrative example of subject matter classified in this group:

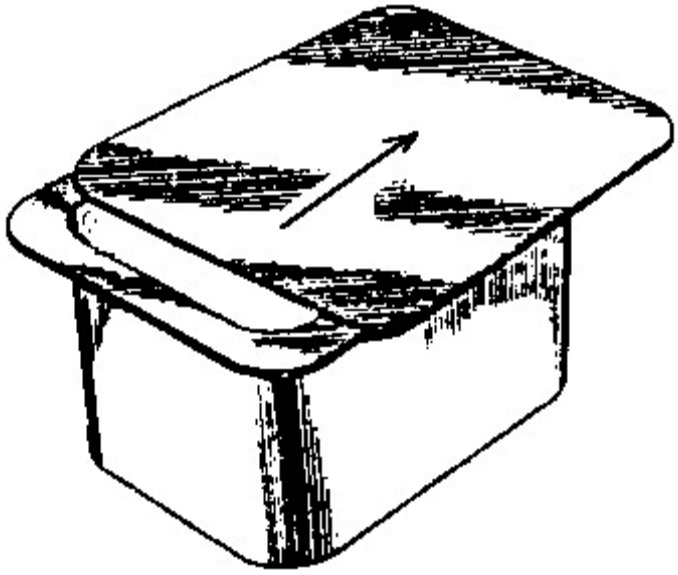

Informative references

Attention is drawn to the following places, which may be of interest for search:

Linearly slidable	B65D 43/20

Special rules of classification within this group

The use of available Indexing Codes is mandatory.

B65D 43/14

Non-removable lids or covers

Special rules of classification within this group

The use of available Indexing Codes is mandatory.

B65D 43/16

hinged for upward or downward movement ([N: cigar or cigarette receptacles A24F 15/00; suitcases, ètuis A45C; casings for cosmetic substances with hinged covers A45D 40/22; toolboxes B25H 3/02]; hinges of door or similar type E05D; [N: boxes for switchboards with hinged covers H02B1/08])

Definition statement

This subclass/group covers:

Illustrative example of subject matter classified in this group:

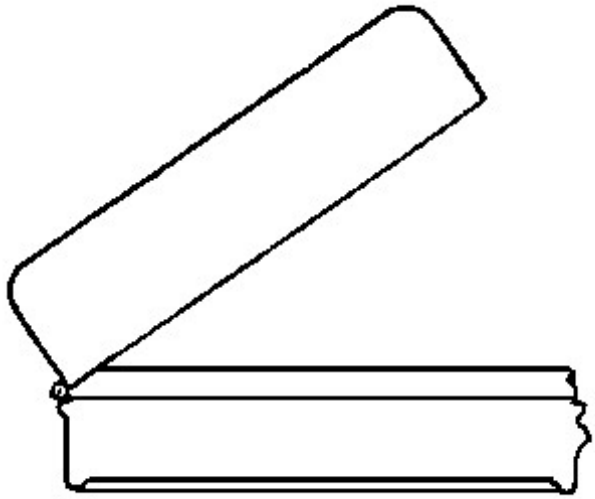

Special rules of classification within this group

The use of available Indexing Codes is mandatory.

B65D 43/161

[N: comprising two or more cover sections hinged one to another]

Definition statement

This subclass/group covers:

Illustrative example of subject matter classified in this group:

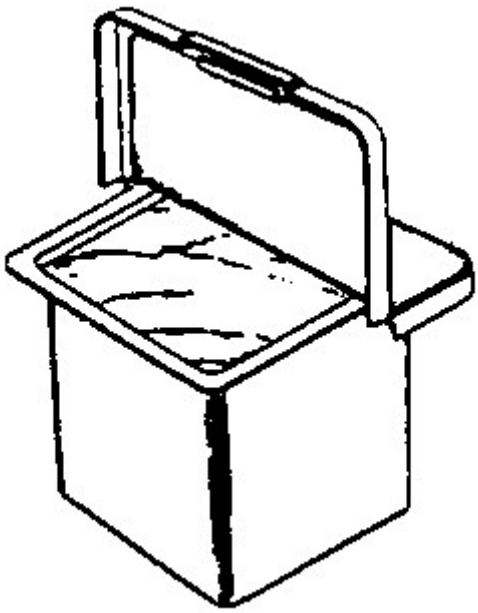

Informative references

Attention is drawn to the following places, which may be of interest for search:

Hinges without elastic bias located within a flat surface of the base element	B65D 47/0847

Special rules of classification within this group

The use of available Indexing Codes is mandatory.

B65D 43/162

[N: the container, the lid and the hinge being made of one piece (B65D 43/161 takes precedence)]

Definition statement

This subclass/group covers:

Illustrative example of subject matter classified in this group:

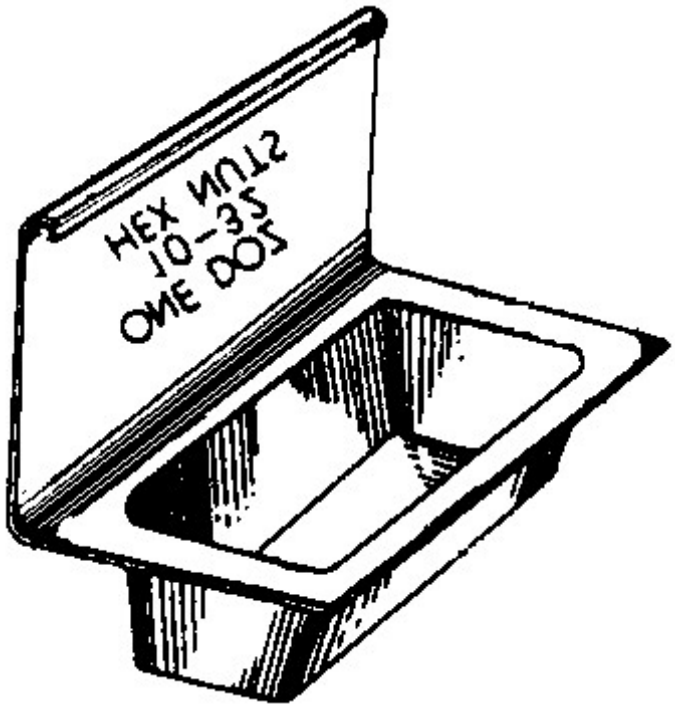

References relevant to classification in this group

This subclass/group does not cover:

Non-removable lids or covers comprising two or more cover sections hinged one to another	B65D 43/161

Informative references

Attention is drawn to the following places, which may be of interest for search:

Details of packages formed by enclosing articles or materials in preformed containers	B65D 75/22

Special rules of classification within this group

The use of available Indexing Codes is mandatory.

B65D 43/163

[N: the container and the lid being made separately (B65D 43/161 takes precedence)]

References relevant to classification in this group

This subclass/group does not cover:

Non-removable lids or covers comprising two or more cover sections hinged one to another	B65D 43/161

Special rules of classification within this group

The use of available Indexing Codes is mandatory.

B65D 43/164

[N: and connected by interfitting hinge elements integrally with the container and the lid formed respectively]

Definition statement

This subclass/group covers:

Illustrative example of subject matter classified in this group:

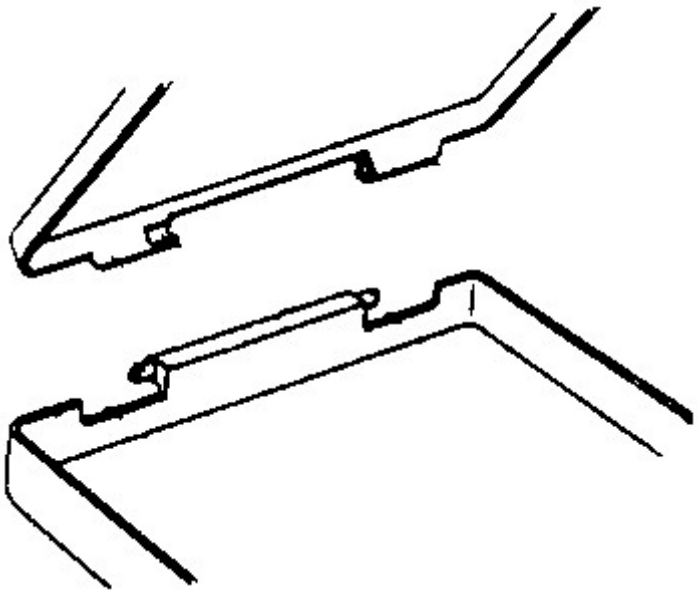

Special rules of classification within this group

The use of available Indexing Codes is mandatory.

B65D 43/165

[N: these elements being assembled by a separate pin-like

member]

Definition statement

This subclass/group covers:
Illustrative example of subject matter classified in this group:

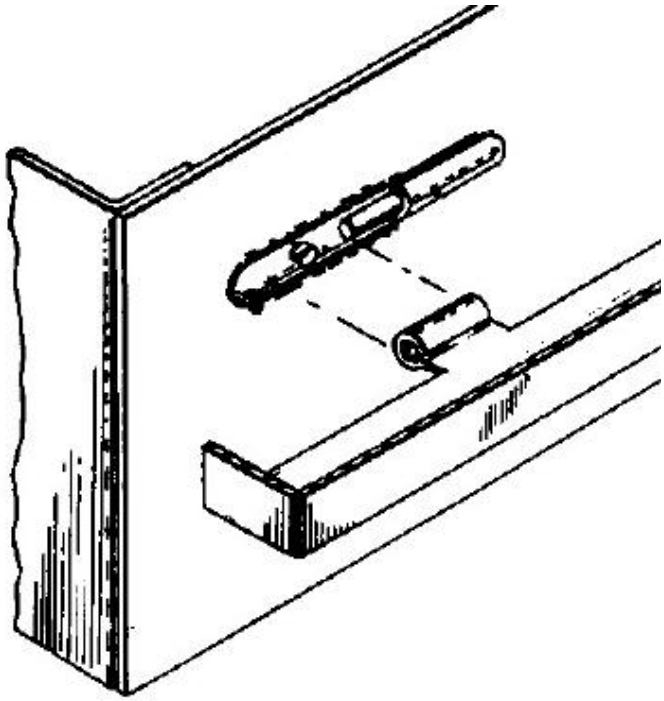

Special rules of classification within this group

The use of available Indexing Codes is mandatory.

B65D 43/166

[N: and connected by separate interfitting hinge elements fixed to the container and the lid respectively]

Definition statement

This subclass/group covers:
Illustrative example of subject matter classified in this group:

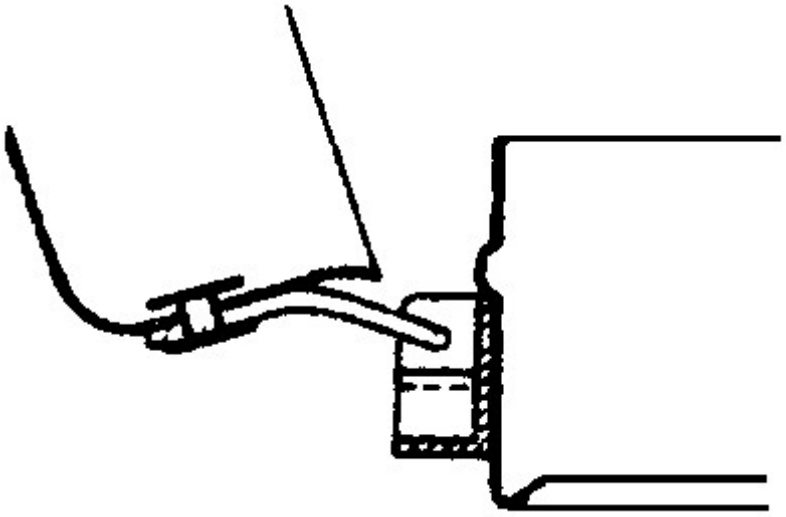

Special rules of classification within this group

The use of available Indexing Codes is mandatory.

B65D 43/167

[N: these elements being assembled by a separate pin-like member]

Definition statement

This subclass/group covers:
Illustrative example of subject matter classified in this group:

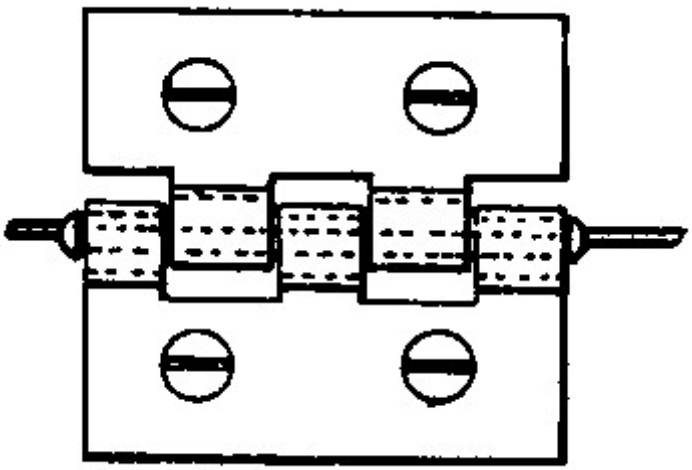

Special rules of classification within this group

The use of available Indexing Codes is mandatory.

B65D 43/168

[N: and connected by one or more hinges formed by a separate, single container and a flexible, band-like element fixed to the container and the lid]

Definition statement

This subclass/group covers:

Illustrative example of subject matter classified in this group:

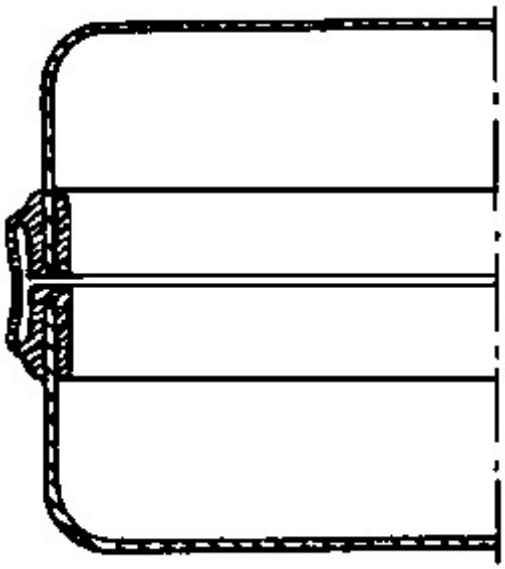

Special rules of classification within this group

The use of available Indexing Codes is mandatory.

B65D 43/169

[N: the lid, the hinge and the element connecting them to the container being made of one piece]

Definition statement

This subclass/group covers:

Illustrative example of subject matter classified in this group:

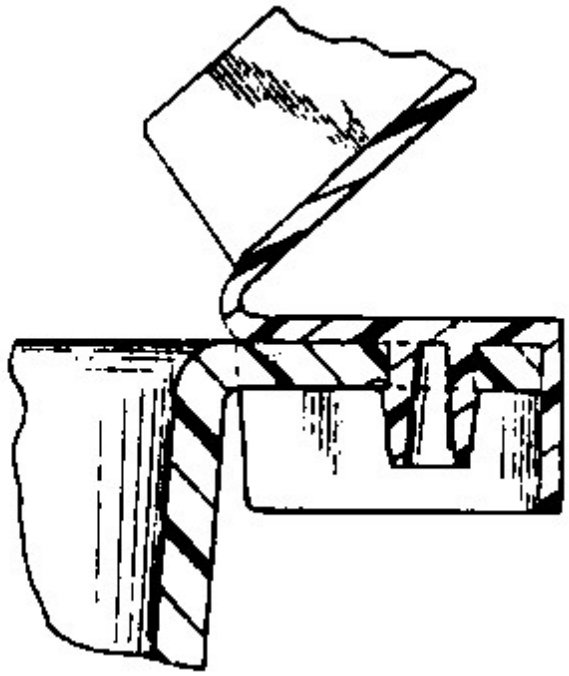

Special rules of classification within this group

The use of available Indexing Codes is mandatory.

B65D 43/18

pivoted for movement in plane of container mouth

Definition statement

This subclass/group covers:
Illustrative example of subject matter classified in this group:

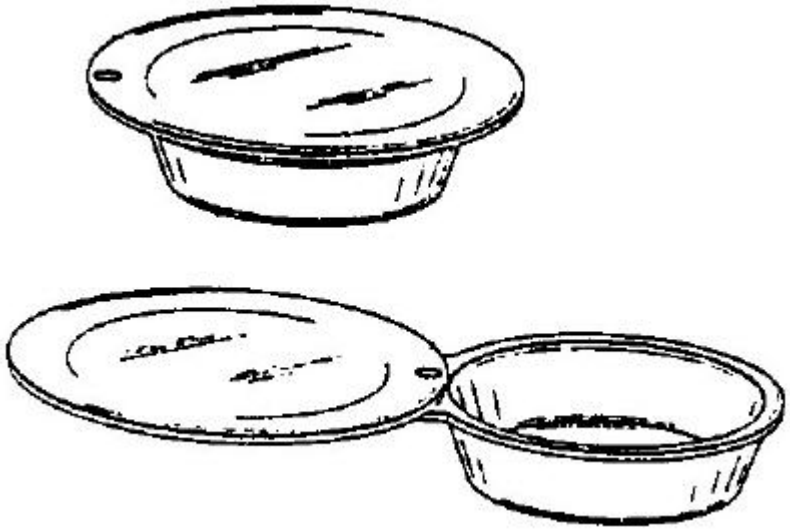

Special rules of classification within this group

The use of available Indexing Codes is mandatory.

B65D 43/20

linearly slidable

Definition statement

This subclass/group covers:
Illustrative example of subject matter classified in this group:

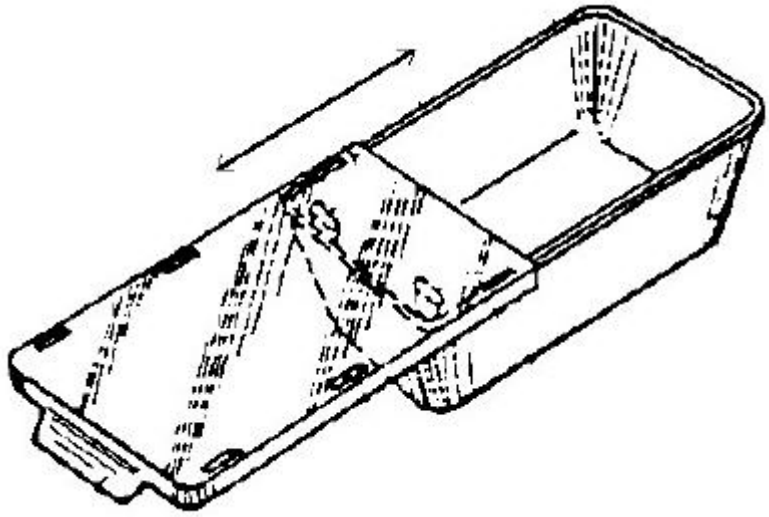

Informative references

Attention is drawn to the following places, which may be of interest for search:

Guided for removal by sliding	B65D 43/12

Special rules of classification within this group

The use of available Indexing Codes is mandatory.

B65D 43/22

Devices for holding in closed position, e.g. clips

Definition statement

This subclass/group covers:

Illustrative example of subject matter classified in this group:

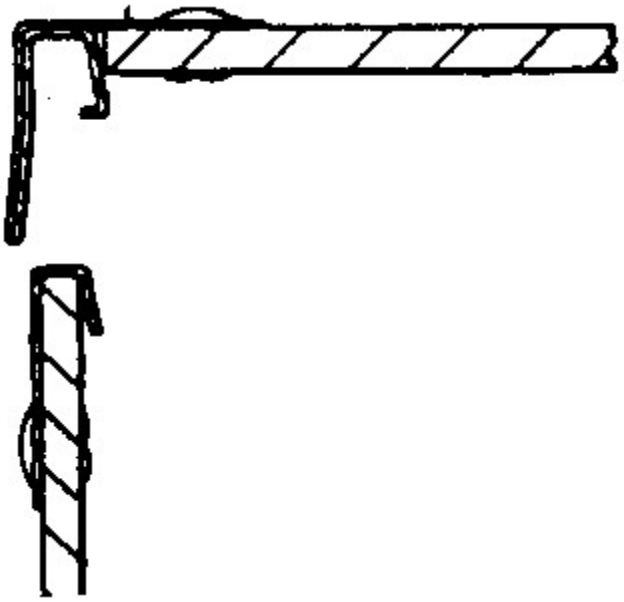

References relevant to classification in this group

This subclass/group does not cover:

Releasable fastenings clips	F16B 2/20

Informative references

Attention is drawn to the following places, which may be of interest for search:

Non-removable lids or covershinged for upward or downward movement	B65D 45/16
Means for locking the closure in closed position	B65D 2251/1016

Special rules of classification within this group

The use of available Indexing Codes is mandatory.

B65D 43/24

Devices for retaining in open position [N: (holding lids in open position in general E05C 17/00; hinges with means for holding open E05D 11/10)]

Definition statement

This subclass/group covers:
Illustrative example of subject matter classified in this group:

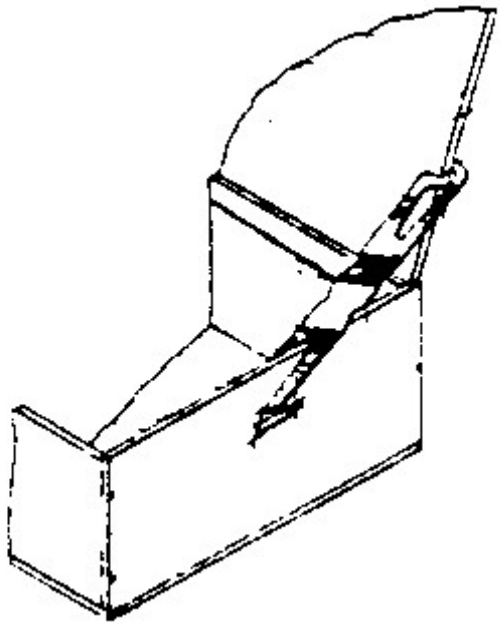

References relevant to classification in this group

This subclass/group does not cover:

For hinged lids	B65D 43/16, B65D 2251/1008

Special rules of classification within this group

The use of available Indexing Codes is mandatory.

B65D 43/26

Mechanisms for opening or closing, e.g. pedal-operated [N: (for refuse receptacles B65F 1/1623)]

Definition statement

This subclass/group covers:
Illustrative example of subject matter classified in this group:

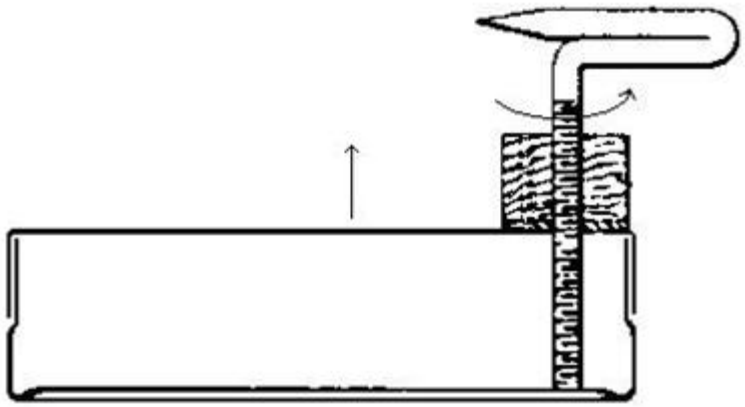

Special rules of classification within this group

The use of available Indexing Codes is mandatory.

B65D 43/262

[N: pedal-operated]

References relevant to classification in this group

This subclass/group does not cover:

Pedal-operated lids for refuse receptacles	B65F 1/163

Special rules of classification within this group

The use of available Indexing Codes is mandatory.

B65D 43/265

[N: consisting of levers pivoting perpendicularly to container axis, e.g. butterfly levers]

Definition statement

This subclass/group covers:

Illustrative example of subject matter classified in this group:

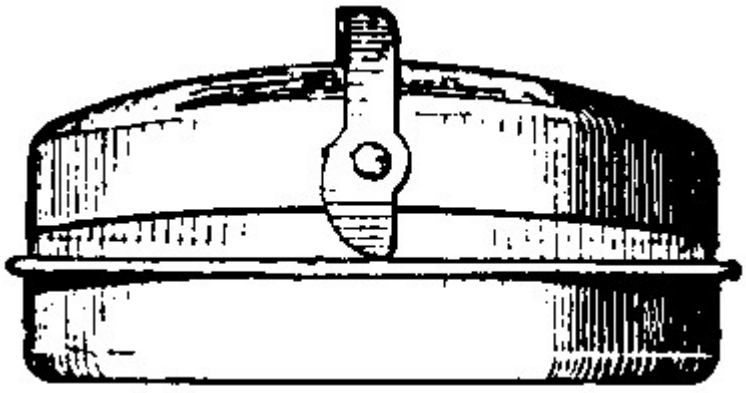

Informative references

Attention is drawn to the following places, which may be of interest for search:

Lever-operated	B65D 45/34

Special rules of classification within this group

The use of available Indexing Codes is mandatory.

B65D 43/267

[N: consisting of levers pivoting radially to container axis]

Definition statement

This subclass/group covers:
Illustrative example of subject matter classified in this group:

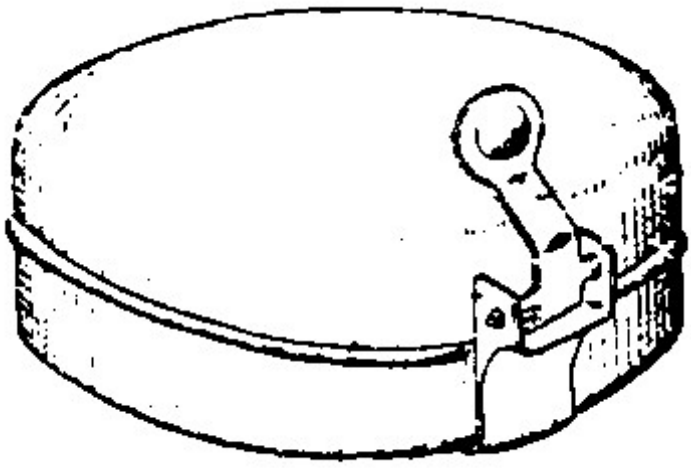

Informative references

Attention is drawn to the following places, which may be of interest for search:

Lever-operated	B65D 45/34

Special rules of classification within this group

The use of available Indexing Codes is mandatory.

B65D 45/00

Clamping or other pressure-applying devices for securing or retaining closure members (screw-threaded or bayonet connections between stoppers or caps and containers B65D 39/08, B65D 41/04, B65D 41/34; expansible stoppers B65D 39/12; for pressure vessels in general F16J 13/00)

References relevant to classification in this group

This subclass/group does not cover:

Shrinkable sleeves or members	B65D 55/0854
For flexible membrane, local	B65D 77/2004
For flexible membrane, peripheral ring	B65D 77/202

Informative references

Attention is drawn to the following places, which may be of interest for search:

Closure flaps or lids attached to, or incorporated in, containers, or foldable or erectable container blanks, made of paper	B65D 3/00, B65D 5/00
Closure walls of containers specially constructed to be opened by cutting, piercing, or tearing of wall portions	B65D 17/00
Applying closure members to bottles, jars, or similar containers	B67B

Covers or similar closure members, for pressure vessels in general	F16J 13/00

B65D 45/02

for applying axial pressure to engage closure with sealing surface

References relevant to classification in this group

This subclass/group does not cover:

Combining axial and radial pressure	B65D 45/32

B65D 45/025

[N: Closure members opened by lever action and maintained closed by spring action (B65D 45/04 takes precedence)]

Definition statement

This subclass/group covers:

Illustrative example of subject matter classified in this group:

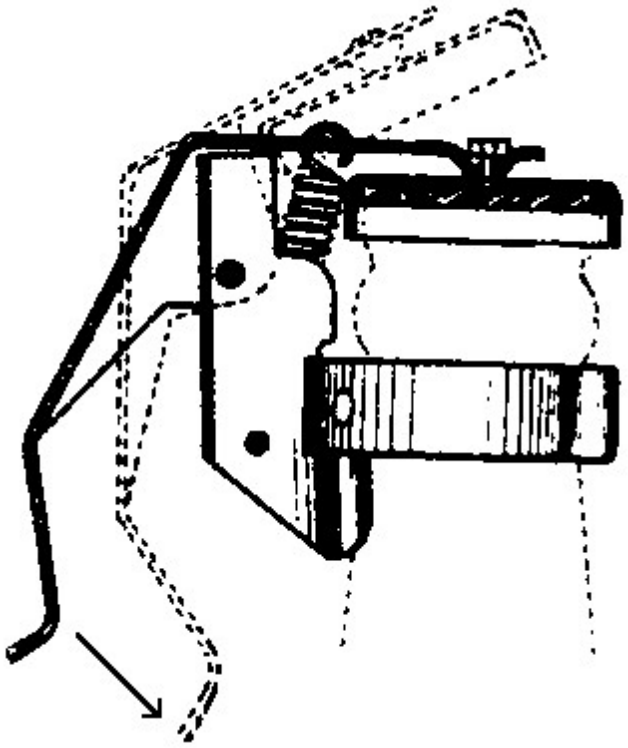

References relevant to classification in this group

This subclass/group does not cover:

Comprising U-shaped or bifurcated members coacting with containers	B65D 45/04

B65D 45/04

comprising U-shaped or bifurcated members coacting with containers [N: these members remaining connected with the closure and with the container when the container is open], e.g. pivoted bails

Informative references

Attention is drawn to the following places, which may be of interest for search:

Hand-operated members for controlling discharge with slide valves having a rotational or helicoidal movement	B65D 47/261

B65D 45/06

associated with toggle levers, e.g. swing stopper arrangements (forming levers or links by working wire B21F 45/04)

Definition statement

This subclass/group covers:

Illustrative example of subject matter classified in this group:

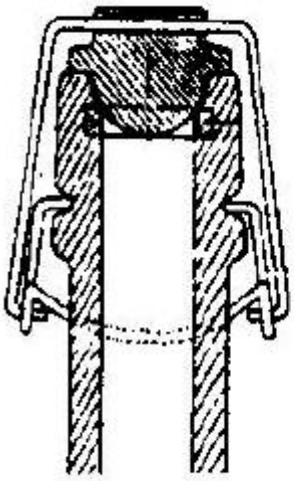

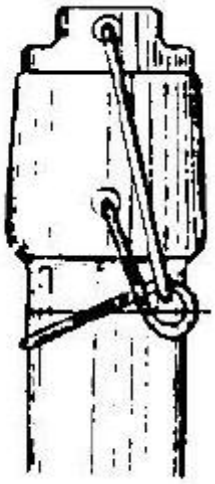

Informative references

Attention is drawn to the following places, which may be of interest for search:

Forming levers of links by working wire	B21F 45/04
Toggle fasteners in general	E05C 19/14

B65D 45/08

incorporating springs

Definition statement

This subclass/group covers:

Illustrative example of subject matter classified in this group:

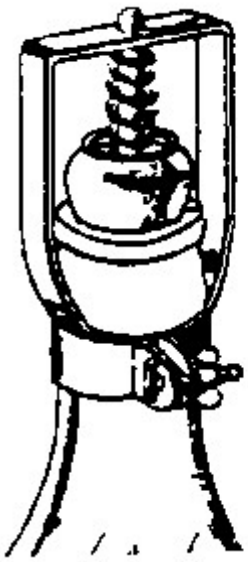

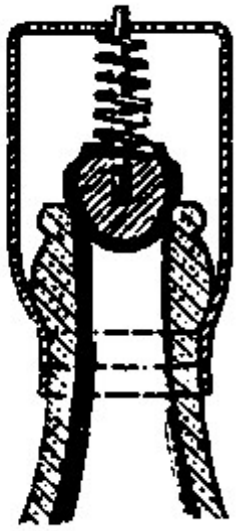

B65D 45/10

incorporating tightening screws

Definition statement

This subclass/group covers:
Illustrative example of subject matter classified in this group:

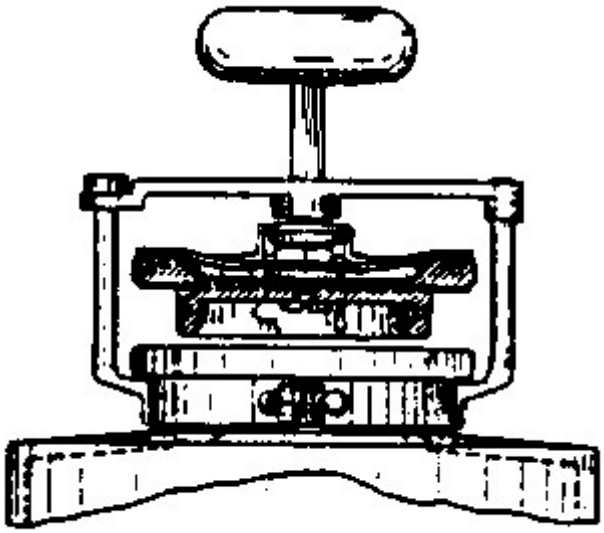

B65D 45/12

associated with locking levers engaging rack teeth for varying the applied pressure

Definition statement

This subclass/group covers:

Illustrative example of subject matter classified in this group:

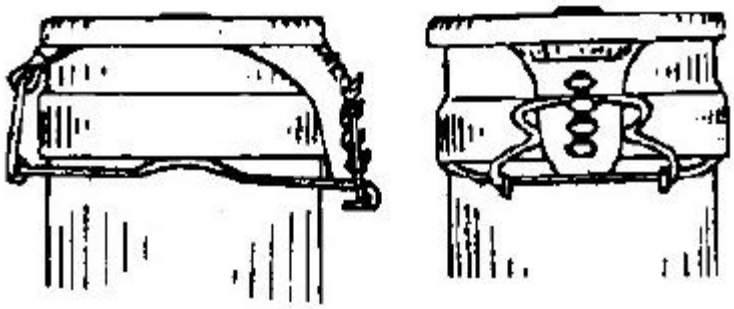

B65D 45/14

coacting with inclined grooves in container wall for varying the applied pressure

Definition statement

This subclass/group covers:

Illustrative example of subject matter classified in this group:

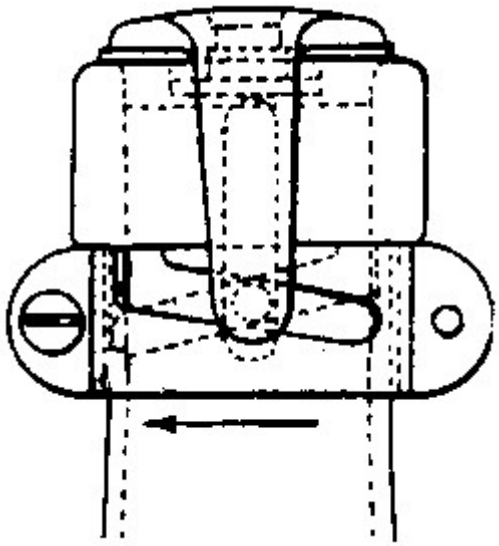

B65D 45/16

Clips, hooks, or clamps [N: which are removable, or which remain connected either with the closure or with the container when the container is open], e.g. C-shaped (U-shaped or bifurcated members B65D 45/04)

References relevant to classification in this group

This subclass/group does not cover:

Releasable fastenings clips	F16B 2/20

Informative references

Attention is drawn to the following places, which may be of interest for search:

Devices for holding in closed position	B65D 43/22

B65D 45/18

of snap-over type

Definition statement

This subclass/group covers:
Illustrative example of subject matter classified in this group:

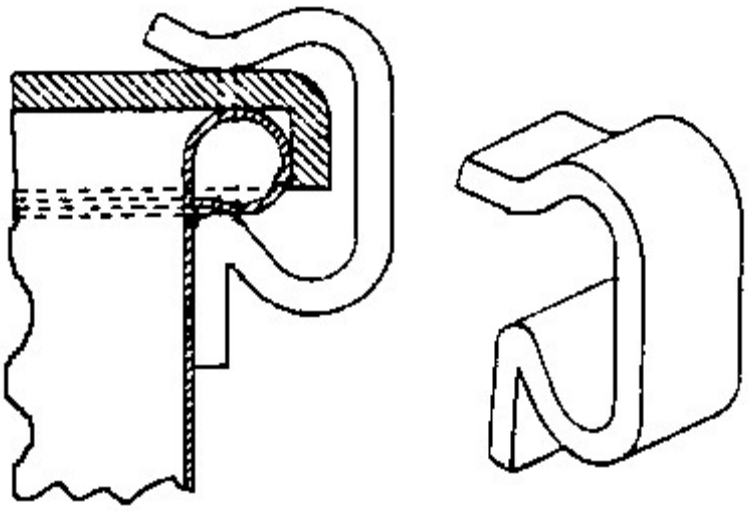

B65D 45/22

resilient

Definition statement

This subclass/group covers:
Illustrative example of subject matter classified in this group:

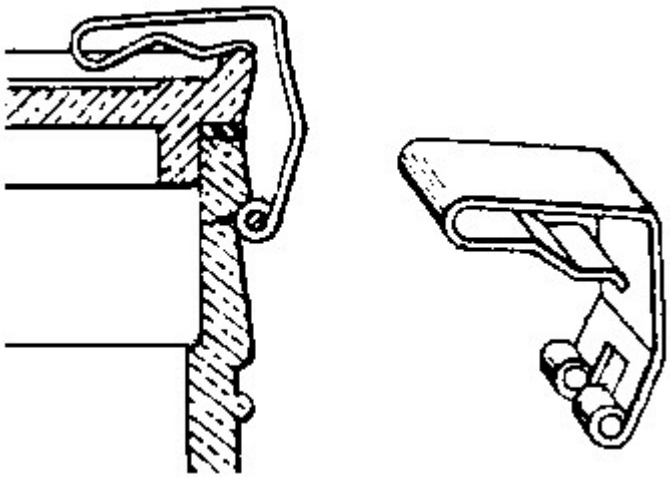

References relevant to classification in this group

This subclass/group does not cover:

Elastic bolts	E05C 19/06
Toggle fasteners	E05C 19/14

B65D 45/24

incorporating pressure-applying means, e.g. screws, toggles

Definition statement

This subclass/group covers:
Illustrative example of subject matter classified in this group:

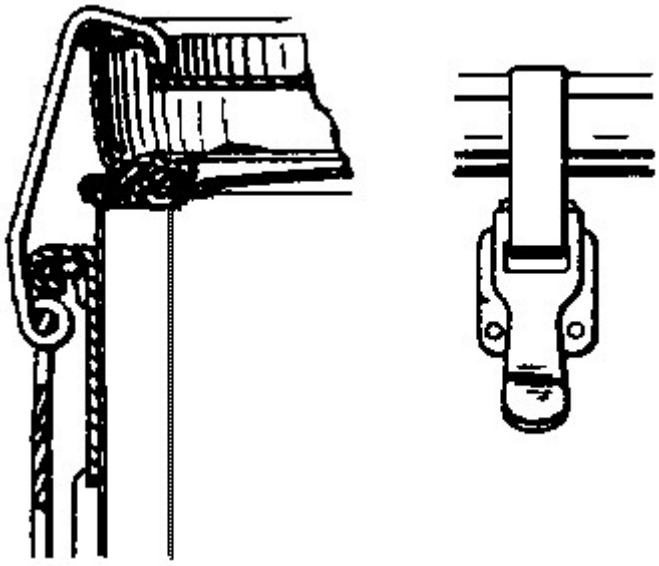

References relevant to classification in this group

This subclass/group does not cover:

Toggle latch	E05C 19/14

B65D 45/26

incorporating tensioning chains

Definition statement

This subclass/group covers:

Illustrative example of subject matter classified in this group:

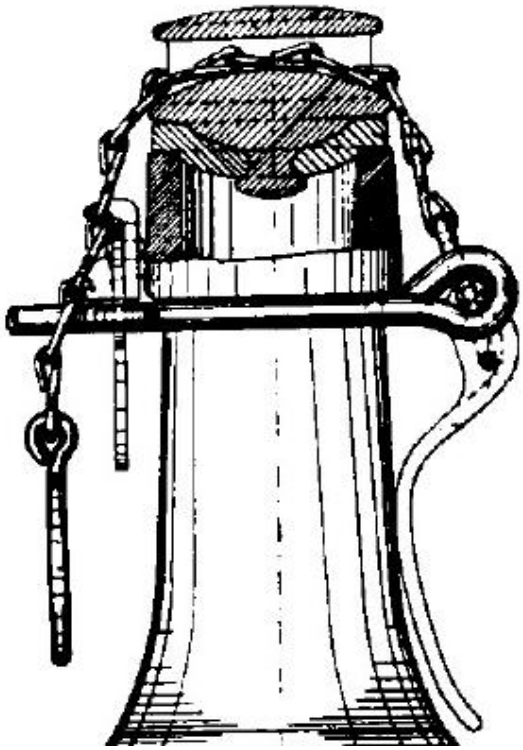

B65D 45/28

Elongated members, e.g. leaf springs, located substantially at right angles to closure axis and acting between the face of the closure and abutments on container

Definition statement

This subclass/group covers:

Illustrative example of subject matter classified in this group:

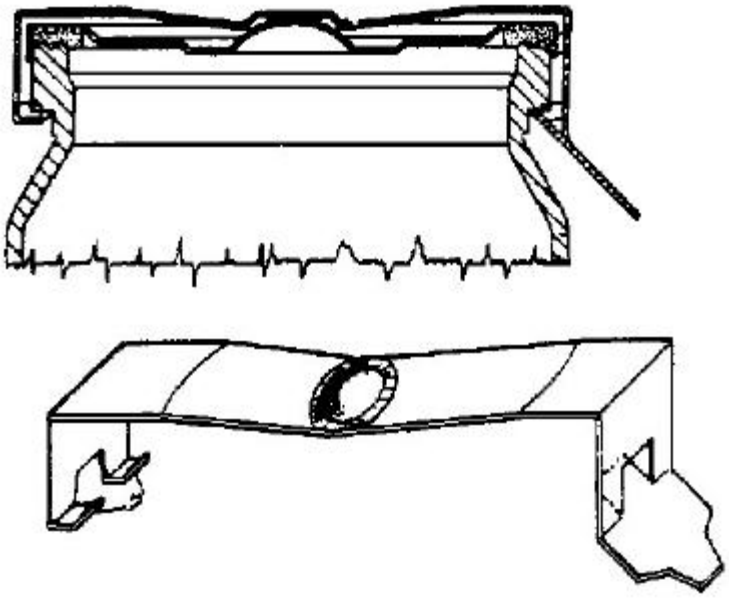

B65D 45/30

Annular members, e.g. with snap-over action, screw-threaded [N: (B65D 45/32 takes precedence)]

Definition statement

This subclass/group covers:
Illustrative example of subject matter classified in this group:

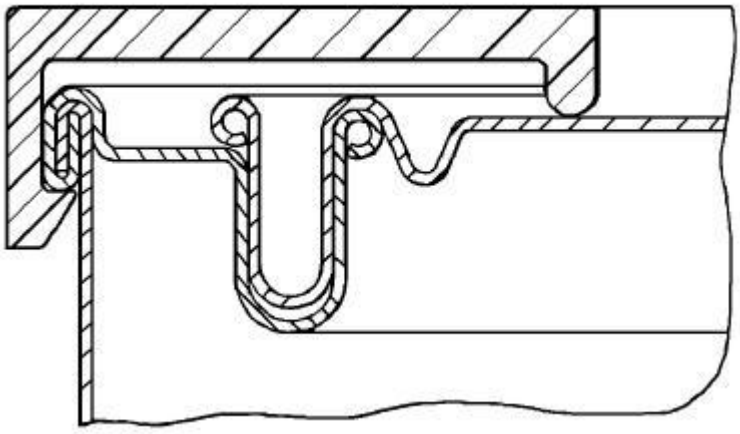

References relevant to classification in this group

This subclass/group does not cover:

Combining axial and radial pressure	B65D 45/32

Non-destructible cap-like collars for maintaining rigid discs in sealing engagement with container	B65D 51/145
Destructible elements for maintaining closure on container	B65D 55/08

B65D 45/305

[N: Screw-threaded or bayonet-type annular members cooperating with an intermediate ring (B65D 41/08, B65D 51/14 takes precedence)]

Definition statement

This subclass/group covers:

Illustrative example of subject matter classified in this group:

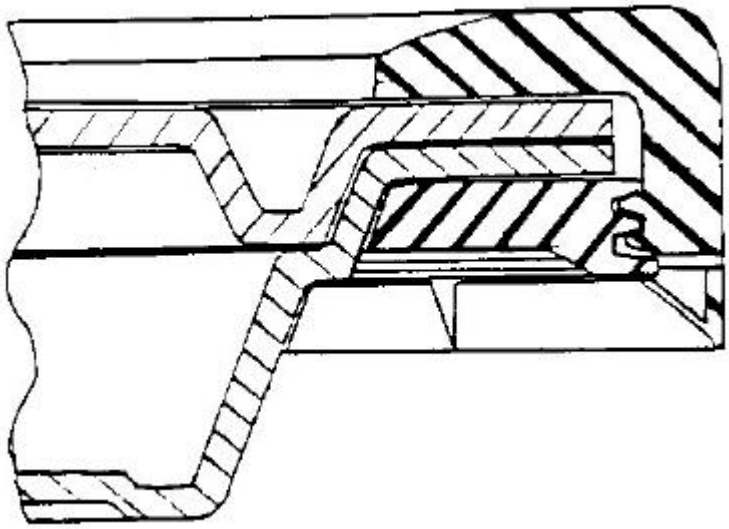

References relevant to classification in this group

This subclass/group does not cover:

Threaded or like caps or cap-like covers secured by rotation engaging a threaded ring clamped on the external periphery of the neck or wall	B65D 41/08
Rigid discs or spherical members adapted to be held in sealing engagement with mouth of container,	B65D 51/14

e.g. closure plates for preserving jars	

Informative references

Attention is drawn to the following places, which may be of interest for search:

Clamping device being an annular member moved axially to clamp the closure by using radial pressure the annular member being screw-threaded or bayonet-type	B65D 45/325

B65D 45/32

for applying radial [N: or radial and axial] pressure, e.g. contractible bands encircling closure member]

Definition statement

This subclass/group covers:

Illustrative example of subject matter classified in this group:

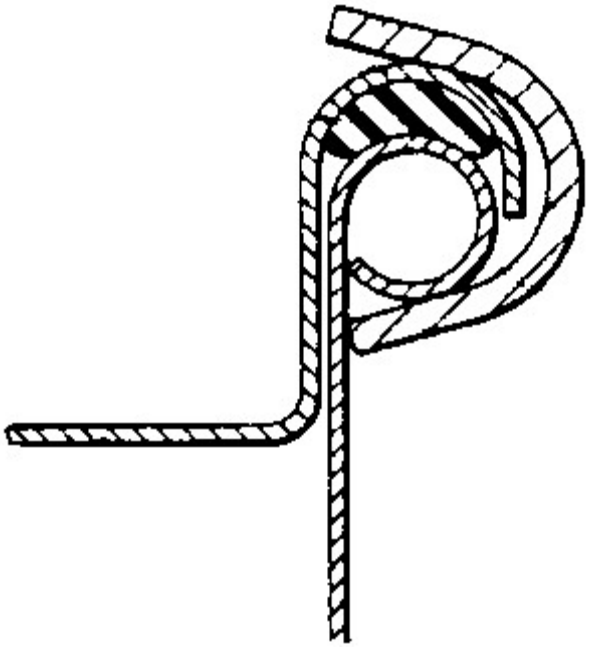

References relevant to classification in this group

This subclass/group does not cover:

Destructible elements for maintaining	B65D 55/08

closure on container	
Locking pins exerting a radial force	B65D 55/10

B65D 45/322

[N: the clamping device being an annular member moved axially to clamp the closure by using radial pressure (B65D 55/0863, B65D 55/0872 take precedence)]

Definition statement

This subclass/group covers:

Illustrative example of subject matter classified in this group:

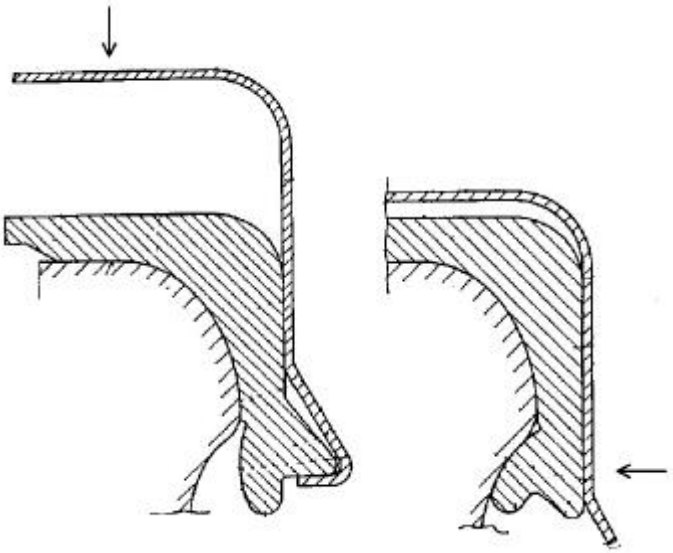

References relevant to classification in this group

This subclass/group does not cover:

Plastic snap-on cap-like collars having frangible parts	B65D 55/0863
Destructible rigid elements snapping into annular grooves in closure for maintaining closure on container	B65D 55/0872

B65D 45/325

[N: the annular member being screw-threaded or bayonet-type (B65D 51/14 takes precedence)]

Definition statement

This subclass/group covers:

Illustrative example of subject matter classified in this group:

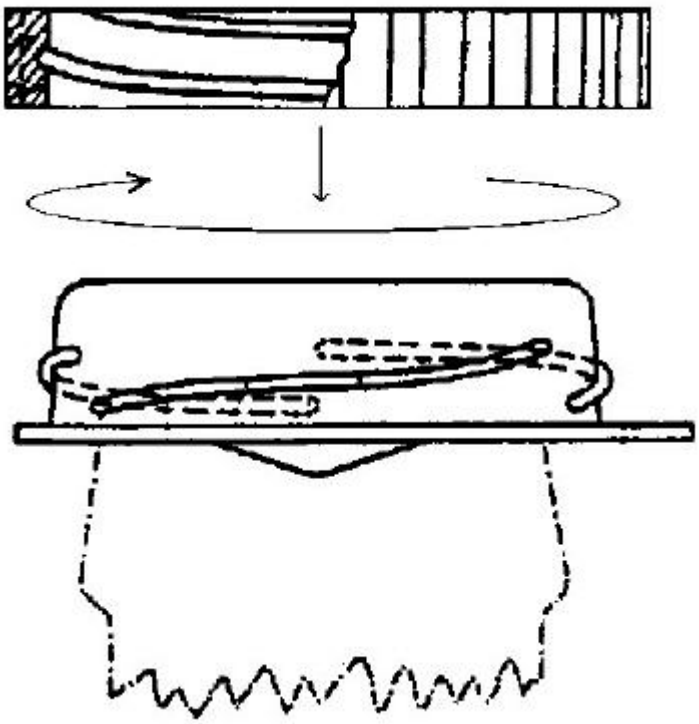

References relevant to classification in this group

This subclass/group does not cover:

Rigid discs or spherical members adapted to be held in sealing engagement with mouth of container	B65D 51/14

Informative references

Attention is drawn to the following places, which may be of interest for search:

Threaded or like caps or cap-like covers secured by rotation engaging a threaded ring clamped on the external periphery of the neck or wall	B65D 41/08
Screw-threaded or bayonet-type annular members cooperating with an	B65D 45/305

intermediate ring	

B65D 45/327

[N: the annular member applying radial pressure against the inner surface of the container wall (B65D 55/0863, B65D 55/0872 take precedence)]

Definition statement

This subclass/group covers:

Illustrative example of subject matter classified in this group:

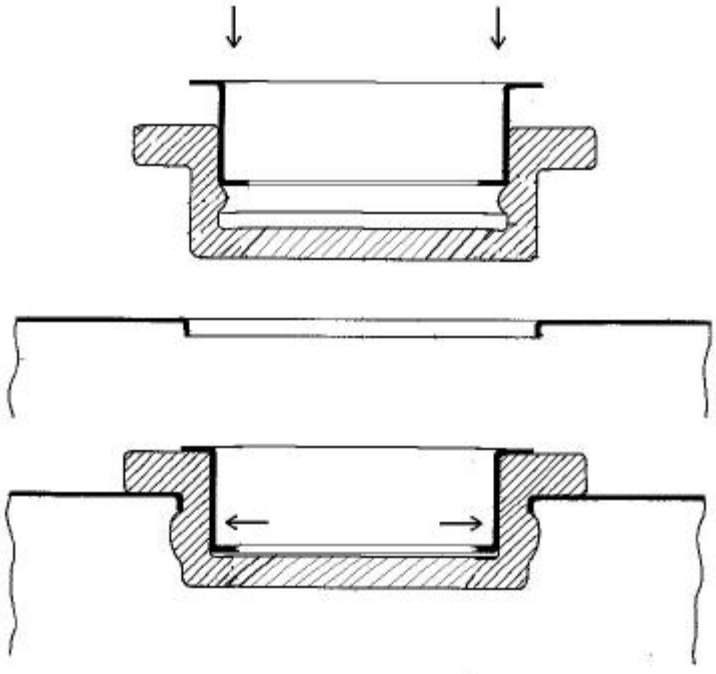

References relevant to classification in this group

This subclass/group does not cover:

Plastic snap-on cap-like collars having frangible parts	B65D 55/0863
Destructible rigid elements snapping into annular grooves in closure for maintaining closure on container	B65D 55/0872

Informative references

Attention is drawn to the following places, which may be of interest for search:

Closures arranged within necks or pouring openings or in discharge apertures expansible	B65D 39/12

B65D 45/34

lever-operated

Definition statement

This subclass/group covers:

Illustrative example of subject matter classified in this group:

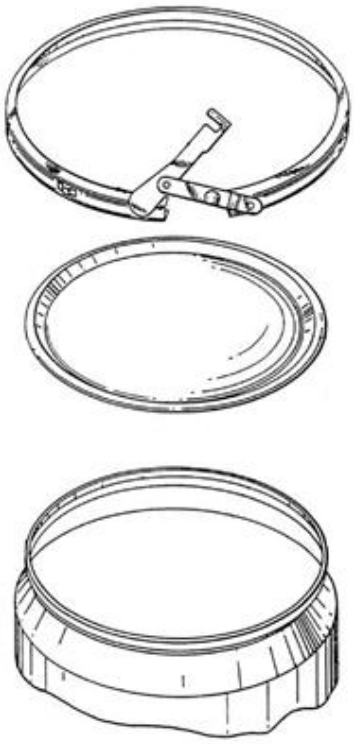

References relevant to classification in this group

This subclass/group does not cover:

Toggle fasteners	E05C 19/14, F16L 33/12, F16L 37/20

Informative references

Attention is drawn to the following places, which may be of interest for search:

Mechanisms for opening or closing consisting of levers pivoting perpendicularly to container axis	B65D 43/265
Mechanisms for opening or closing consisting of levers pivoting radially to container axis	B65D 43/267

B65D 45/345

[N: Lever-operated contractible or expansible band, the lever moving in the plane of the band]

Definition statement

This subclass/group covers:

Illustrative example of subject matter classified in this group:

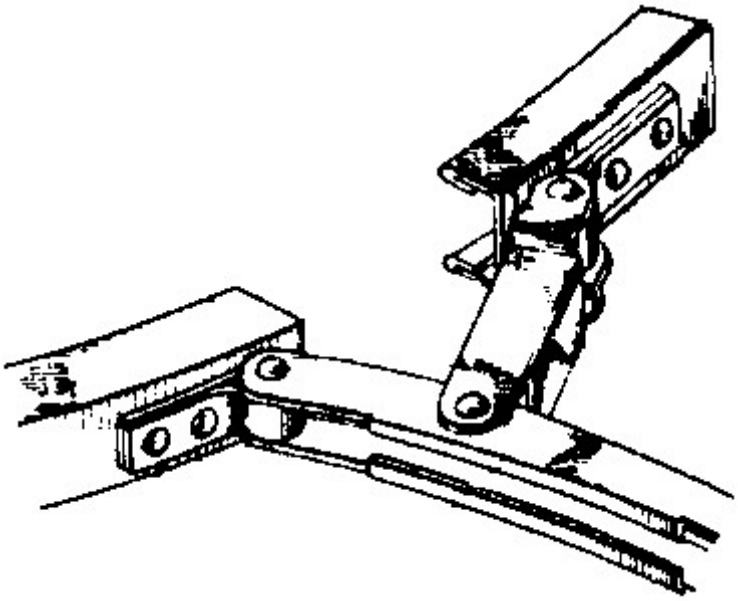

Informative references

Attention is drawn to the following places, which may be of interest for search:

Mechanisms for opening or closing consisting of levers pivoting perpendicularly to container axis	B65D 43/265

B65D 47/00

Closures with filling and discharging, or with discharging, devices (dispensers for liquid soap A47K 5/12; desk equipment for applying liquid by contact with surfaces B43M 11/00; fluid delivery valves in general F16K 21/00)

References relevant to classification in this group

This subclass/group does not cover:

Oil cans with discharging devices	F16N 3/04

Examples of places where the subject matter of this group is covered when specially adapted, used for a particular purpose, or incorporated in a larger system:

Office equipment for applying liquid by contact to surfaces	B43M 11/00

Informative references

Attention is drawn to the following places, which may be of interest for search:

Fluid-delivery valves in general	F16K 21/00

B65D 47/02

for initially filling and for preventing subsequent refilling

References relevant to classification in this group

This subclass/group does not cover:

Arrangements or devices for preventing refilling of containers	B65D 49/00

B65D 47/043

[N: with pouring baffles, e.g. for controlling the flow]

Definition statement

This subclass/group covers:
Illustrative example of subject matter classified in this group:

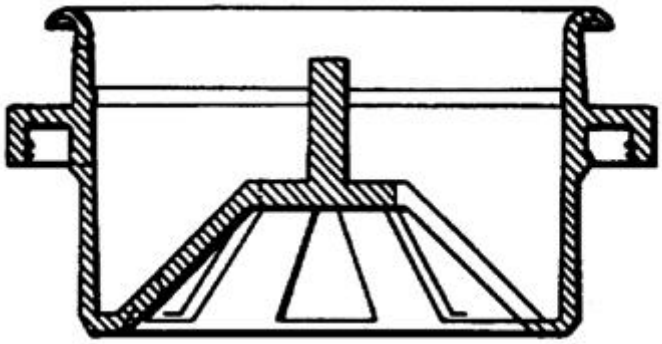

e.g. limiting the cross-sectional area of the spout

References relevant to classification in this group

This subclass/group does not cover:
This subclass/group does not cover:

With means for venting	B65D 47/32

B65D 47/046

[N: Closures with swivelling dispensing devices (containers with swivelling devices comprising a bottom wall and two side walls B65D 25/525)]

Definition statement

This subclass/group covers:
Illustrative example of subject matter classified in this group:

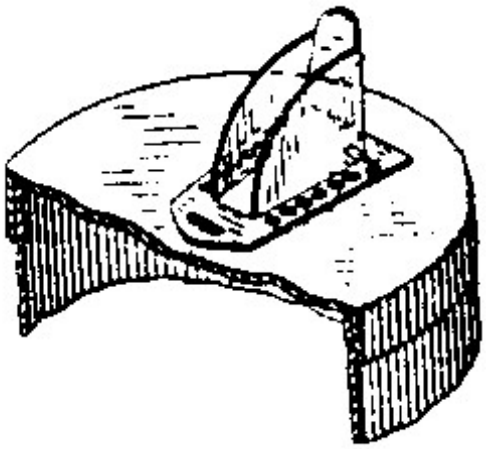

Informative references

Attention is drawn to the following places, which may be of interest for search:

Spouts formed by deforming or tearing scored or incised parts of the side-wall of containers combined with swivelling devices having a bottom-wall and two side-walls	B65D 5/744

B65D 47/06

with pouring spouts or tubes; with discharge nozzles or passages (with slidable spouts B65D 47/26)

References relevant to classification in this group

This subclass/group does not cover:

Drinking lids with valves	B65D 47/2018
Means for facilitating drinking from table glasses or vessels	A47G 19/2266
Caulking nozzles	B05C 17/00503

Informative references

Attention is drawn to the following places, which may be of interest for search:

Nozzles or spouts	B65D 25/40

Special rules of classification within this group

The use of available Indexing Codes is mandatory.

B65D 47/061

[N: with telescopic, retractable or reversible spouts, tubes or nozzles]

Definition statement

This subclass/group covers:

Illustrative example of subject matter classified in this group:

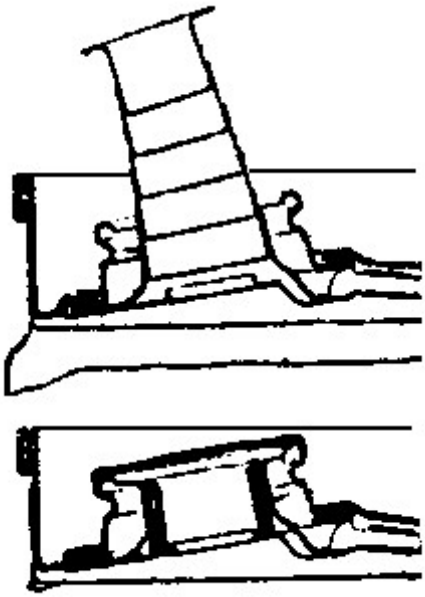

References relevant to classification in this group

This subclass/group does not cover:

Caulking nozzles	B05C 17/00503

Informative references

Attention is drawn to the following places, which may be of interest for search:

Telescopic or retractable nozzles or spouts	B65D 25/44

B65D 47/063

[N: with flexible parts]

Definition statement

This subclass/group covers:
Illustrative example of subject matter classified in this group:

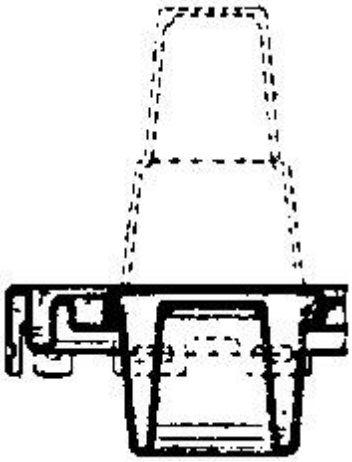

Informative references

Attention is drawn to the following places, which may be of interest for search:

Telescopic or retractable nozzles or spouts	B65D 25/44

B65D 47/065

[N: with hinged, foldable or pivotable spouts]

Definition statement

This subclass/group covers:
Illustrative example of subject matter classified in this group:



References relevant to classification in this group

This subclass/group does not cover:

Caulking nozzles	B05C 17/00503

Informative references

Attention is drawn to the following places, which may be of interest for search:

Hinged integral or attached nozzles or spouts	B65D 25/46

B65D 47/066

[N: the spout being either flexible or having a flexible wall portion, whereby the spout is foldable between a dispensing and a non-dispensing position (B65D 47/2043 takes precedence)]

Definition statement

This subclass/group covers:

Illustrative example of subject matter classified in this group:

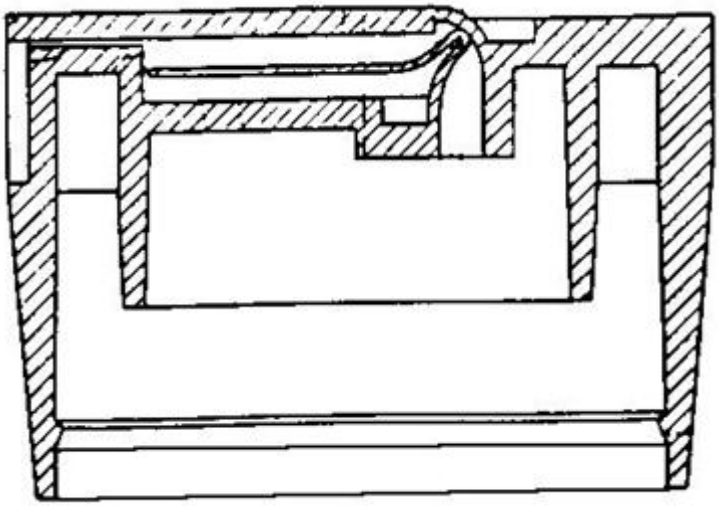

References relevant to classification in this group

This subclass/group does not cover:

Separate element being formed by an overcap which constricts a spout, the spout being either pushed into alignment with, or pushed through, an opening in the overcap upon rotation of the latter	B65D 47/2043

Informative references

Attention is drawn to the following places, which may be of interest for search:

Hinged integral or attached nozzles or spouts, the spout being either flexible or having a flexible wall portion, whereby the spout is foldable between a dispensing and a non-dispensing position	B65D 25/465
Hand-operated members for controlling dischargeformed by a rigid spout outlet opened by tilting of the spout outlet	B65D 47/2006

B65D 47/068

[N: with removable spouts which can be plugged in a discharging and in a closing position]

Definition statement

This subclass/group covers:

Illustrative example of subject matter classified in this group:

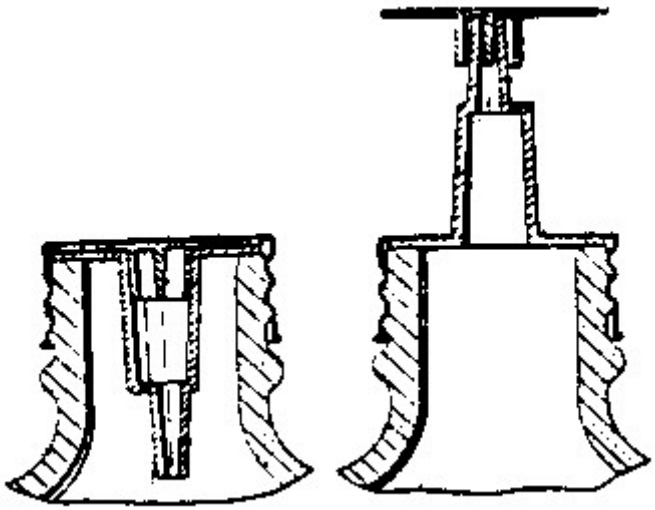

References relevant to classification in this group

This subclass/group does not cover:

Caulking nozzles	B05C 17/00503

Informative references

Attention is drawn to the following places, which may be of interest for search:

Separable nozzles or spouts arranged to be plugged in two alternate positions	B65D 25/50

B65D 47/08

having articulated or hinged closures [N: (B65D 55/16 takes precedence)]

References relevant to classification in this group

This subclass/group does not cover:

Hinged lids	B65D 43/16
Devices preventing loss of removable closure members	B65D 55/16

Special rules of classification within this group

The use of available Indexing Codes is mandatory.

B65D 47/0814

[N: by at least three hinge sections, at least one having a length different from the others]

Definition statement

This subclass/group covers:

Illustrative example of subject matter classified in this group:

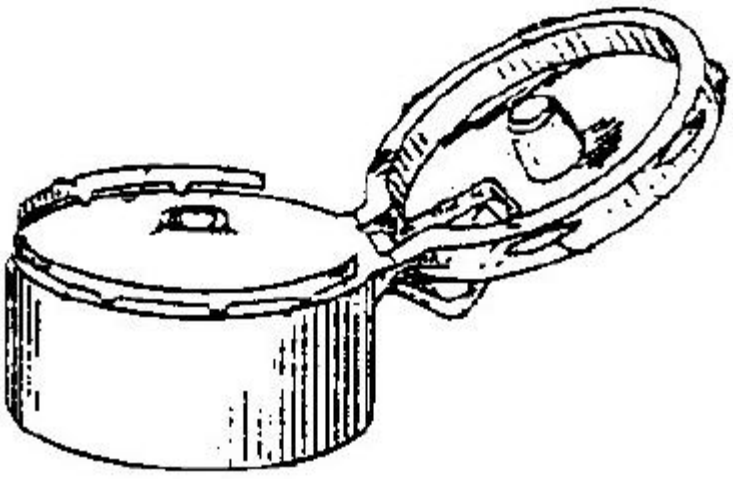

Special rules of classification within this group

The use of available Indexing Codes is mandatory.

B65D 47/0819

[N: by cam action, e.g. interacting protrusions]

Definition statement

This subclass/group covers:

Illustrative example of subject matter classified in this group:

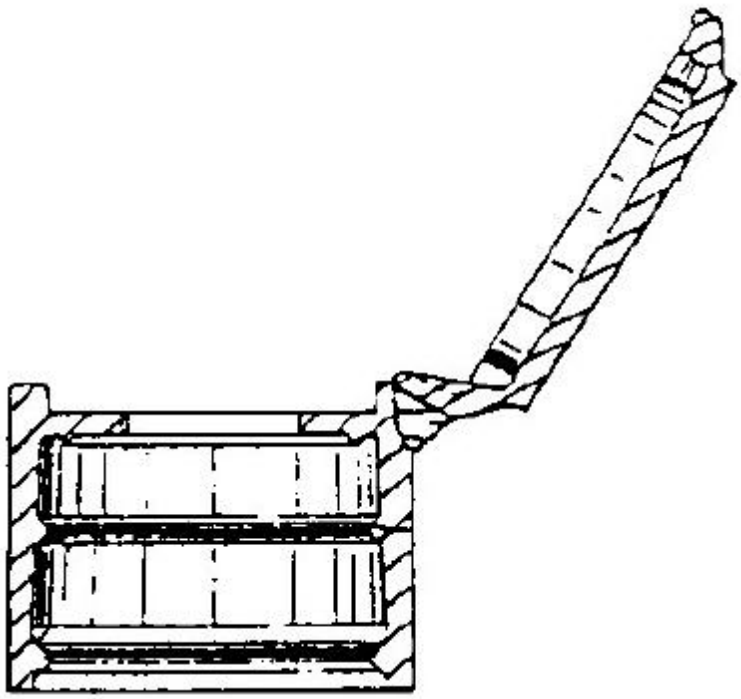

Special rules of classification within this group

The use of available Indexing Codes is mandatory.

B65D 47/0823

[N: and elastically biased towards the closed position only]

Definition statement

This subclass/group covers:
Illustrative example of subject matter classified in this group:

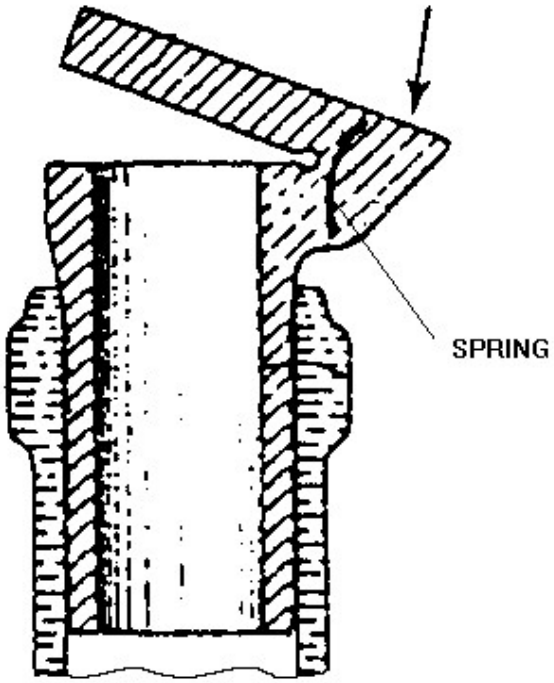

Special rules of classification within this group

The use of available Indexing Codes is mandatory.

B65D 47/0828

[N: and elastically biased towards the open position only]

Definition statement

This subclass/group covers:
Illustrative example of subject matter classified in this group:

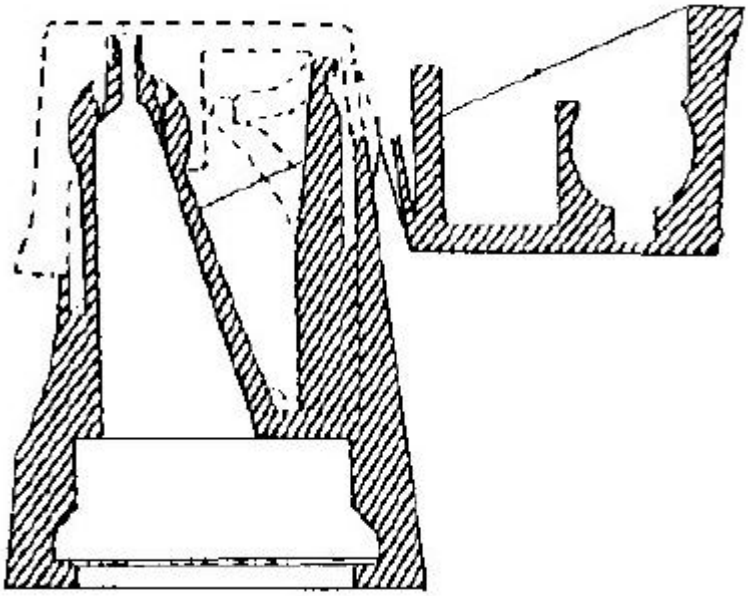

Special rules of classification within this group

The use of available Indexing Codes is mandatory.

B65D 47/0838

[N: located at an edge of the base element]

Definition statement

This subclass/group covers:
Illustrative example of subject matter classified in this group:

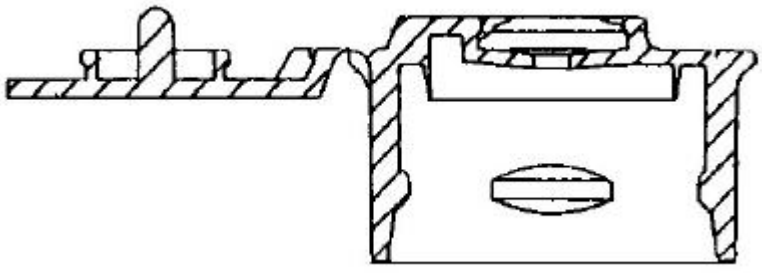

Special rules of classification within this group

The use of available Indexing Codes is mandatory.

B65D 47/0842

[N: consisting of a strap of flexible material]

Definition statement

This subclass/group covers:
Illustrative example of subject matter classified in this group:

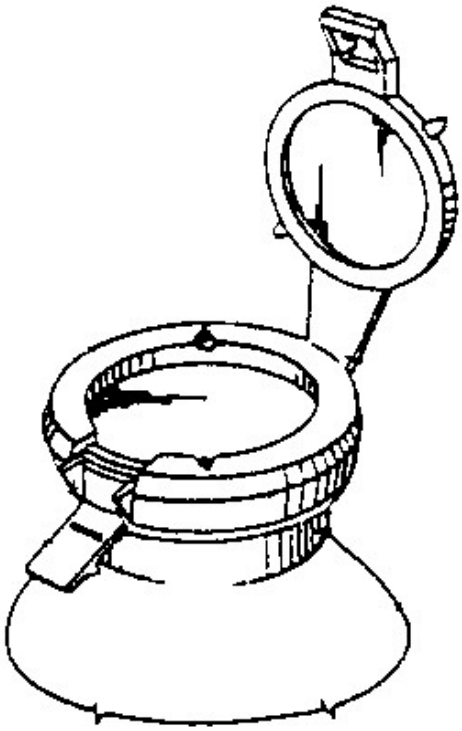

References relevant to classification in this group

This subclass/group does not cover:

Straps with thinned hinged lines	B65D 47/0838, B65D 47/0847
Cap formed separately from base but connected by strap	B65D 47/147, B65D 47/148

Special rules of classification within this group

The use of available Indexing Codes is mandatory.

B65D 47/0847

[N: located within a flat surface of the base element]

Definition statement

This subclass/group covers:
Illustrative example of subject matter classified in this group:

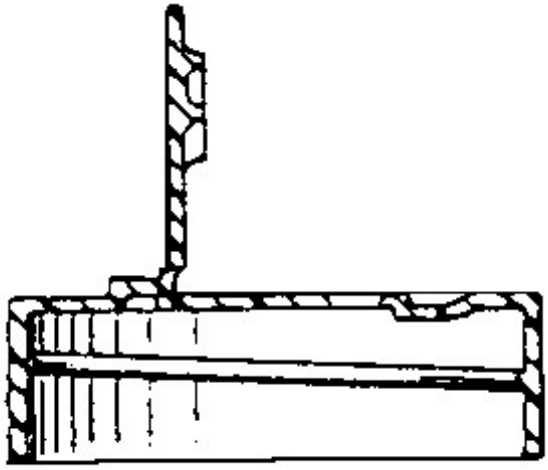

Informative references

Attention is drawn to the following places, which may be of interest for search:

Non-removable lids or covers hinged for upward or downward movement, comprising two or more cover sections hinged one to another	B65D 43/161

Special rules of classification within this group

The use of available Indexing Codes is mandatory.

B65D 47/0852

[N: consisting of a strap of flexible material]

Definition statement

This subclass/group covers:
Illustrative example of subject matter classified in this group:

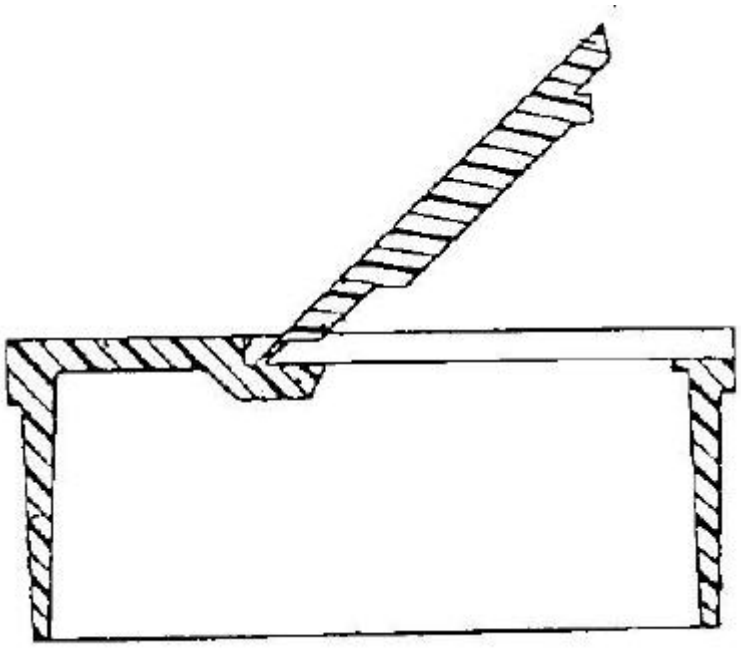

References relevant to classification in this group

This subclass/group does not cover:

Straps with thinned hinged lines	B65D 47/0847
Cap formed separately from base but connected by strap	B65D 47/147, B65D 47/148

Special rules of classification within this group

The use of available Indexing Codes is mandatory.

B65D 47/0857

[N: made separately from the base element provided with the spout or discharge passage]

References relevant to classification in this group

This subclass/group does not cover:

Loosely-engaging lids or covers for jars, cans, or like containers for liquids without means for effecting sealing of container opening automatically when container is tilted for pouring	B65D 51/10

Special rules of classification within this group

The use of available Indexing Codes is mandatory.

B65D 47/0861

[N: and elastically biased towards both the open and the closed positions]

Definition statement

This subclass/group covers:
Illustrative example of subject matter classified in this group:

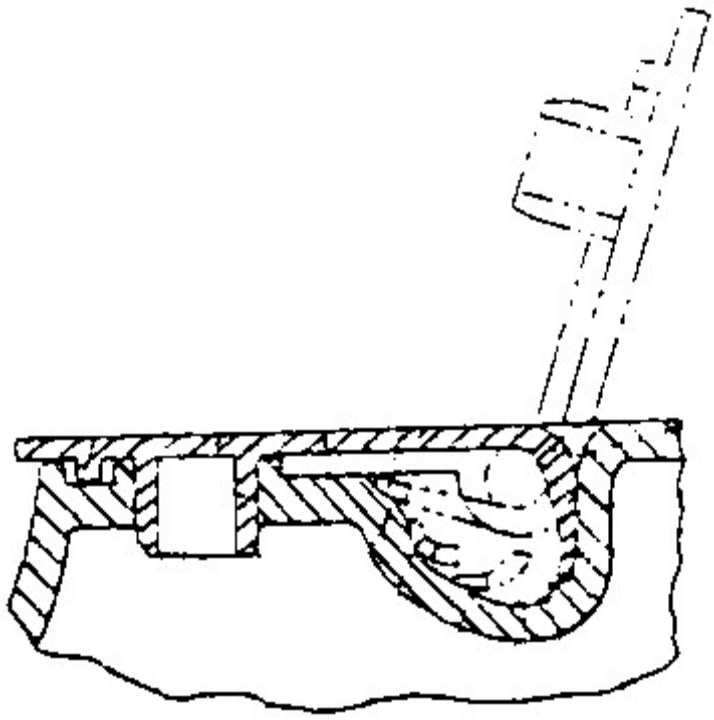

Special rules of classification within this group

The use of available Indexing Codes is mandatory.

B65D 47/0866

[N: and elastically biased towards the closed position only]

Definition statement

This subclass/group covers:
Illustrative example of subject matter classified in this group:

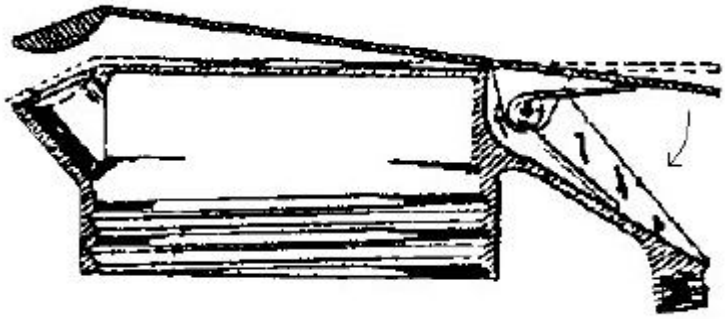

Special rules of classification within this group

The use of available Indexing Codes is mandatory.

B65D 47/0871

[N: and elastically biased towards the open position only]

Definition statement

This subclass/group covers:
Illustrative example of subject matter classified in this group:

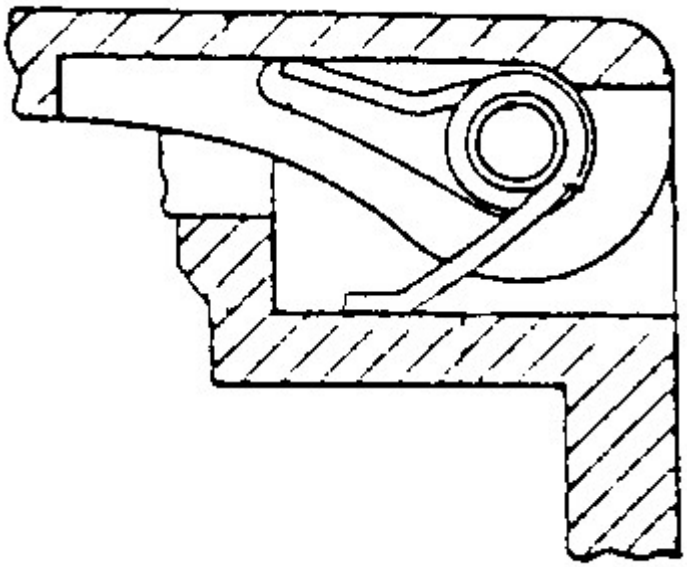

Special rules of classification within this group

The use of available Indexing Codes is mandatory.

B65D 47/0876

[N: Hinges without elastic bias]

Special rules of classification within this group

The use of available Indexing Codes is mandatory.

B65D 47/088

[N: located at an edge of the base element]

Definition statement

This subclass/group covers:
Illustrative example of subject matter classified in this group:

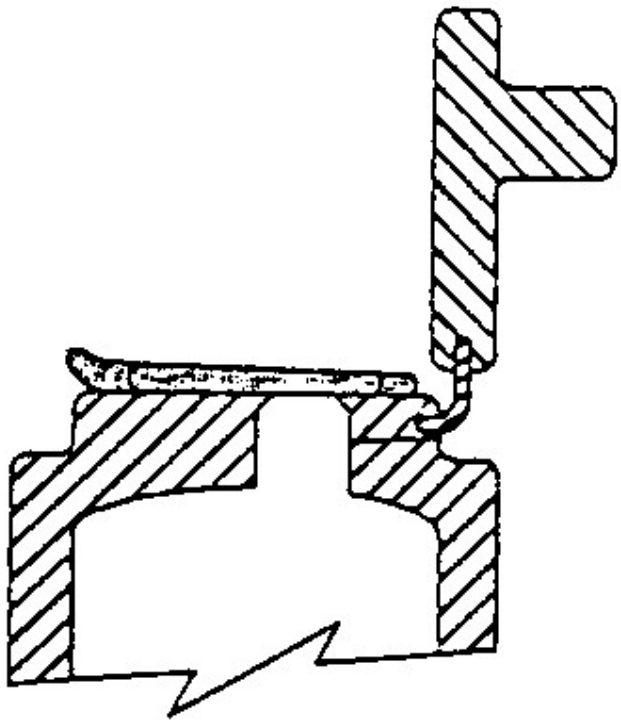

Special rules of classification within this group

The use of available Indexing Codes is mandatory.

B65D 47/0885

[N: one part of the hinge being integral with the hinged closure and the other part with the base element, without any other additional hinge element]

Definition statement

This subclass/group covers:
Illustrative example of subject matter classified in this group:

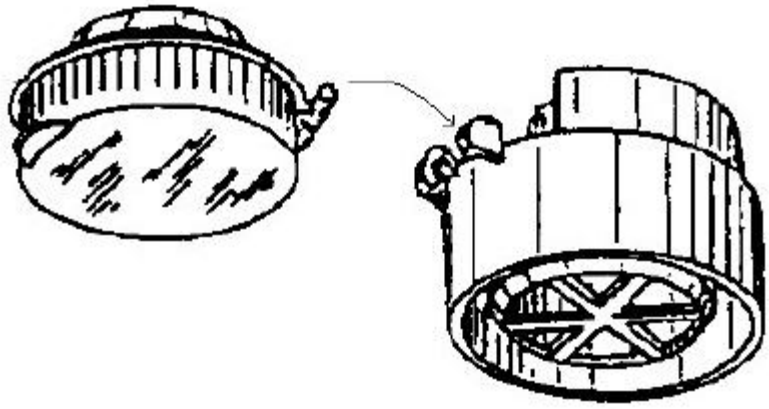

Special rules of classification within this group

The use of available Indexing Codes is mandatory.

B65D 47/089

[N: located within a flat surface of the base element]

Definition statement

This subclass/group covers:
Illustrative example of subject matter classified in this group:

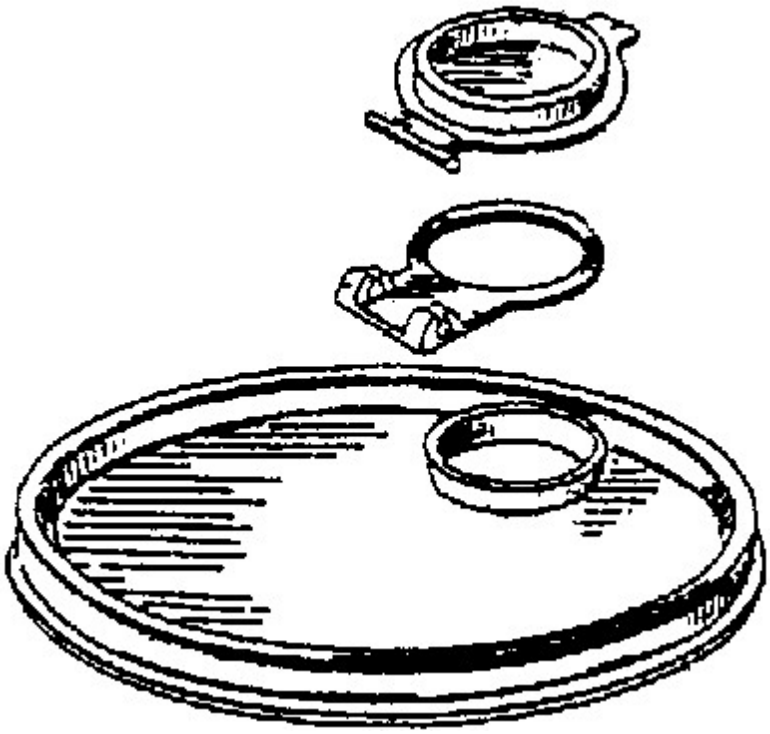

Special rules of classification within this group

The use of available Indexing Codes is mandatory.

B65D 47/0895

[N: one part of the hinge being integral with the hinged closure and the other part with the base element, without any other additional hinge element]

Definition statement

This subclass/group covers:
Illustrative example of subject matter classified in this group:

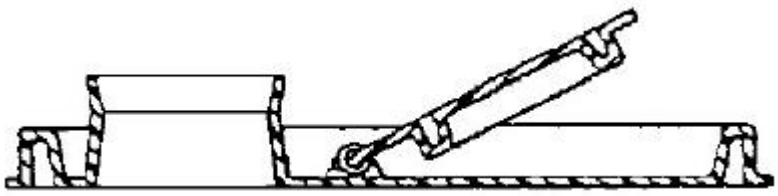

Special rules of classification within this group

The use of available Indexing Codes is mandatory.

B65D 47/10

having frangible closures

Definition statement

This subclass/group covers:
Illustrative example of subject matter classified in this group:

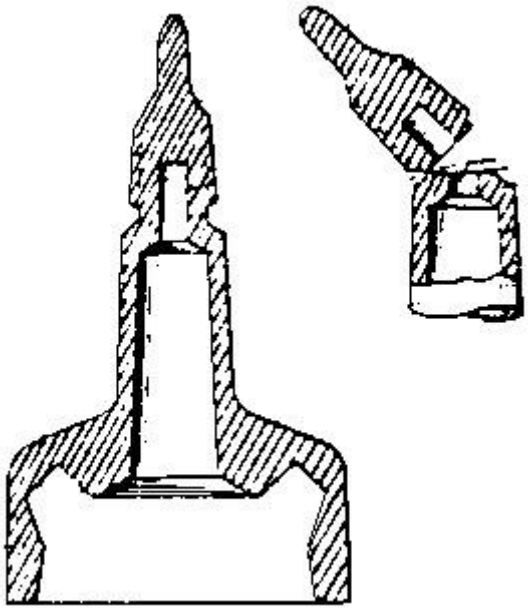

Informative references

Attention is drawn to the following places, which may be of interest for search:

Opening arrangements or devices incorporated in or attached to, containers	B65D 17/161
Closures with frangible parts adapted to be pierced, torn, or removed, to provide discharge openings	B65D 47/36

B65D 47/103

[N: Membranes with a tearing element]

Definition statement

This subclass/group covers:

Illustrative example of subject matter classified in this group:

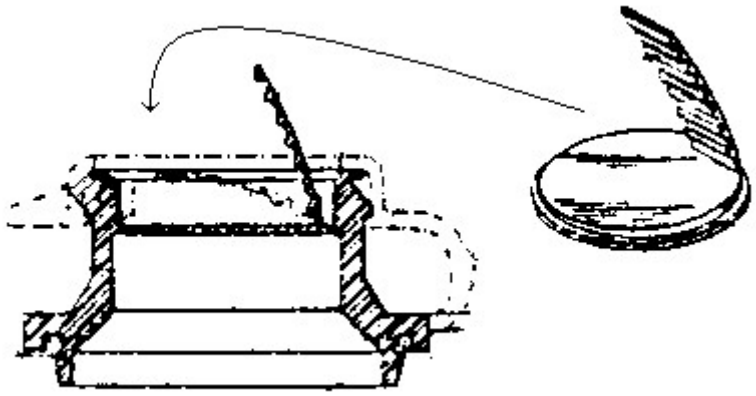

References relevant to classification in this group

This subclass/group does not cover:

With devices for removing frangible parts	B65D 47/106

Informative references

Attention is drawn to the following places, which may be of interest for search:

Spouts formed separately from the container	B65D 5/746

B65D 47/106

[N: with devices for removing frangible parts of the pouring element or of its closure]

Definition statement

This subclass/group covers:

Illustrative example of subject matter classified in this group:

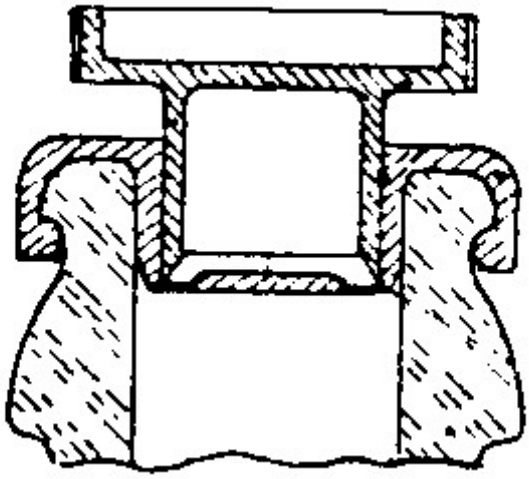

References relevant to classification in this group

This subclass/group does not cover:

Membranes with a tearing element	B65D 47/103

Informative references

Attention is drawn to the following places, which may be of interest for search:

Caps, lids, or covers co-operating with an inner closure arranged to be opened by piercing, cutting, or tearing, having means for piercing, cutting, or tearing the inner closure	B65D 51/22

B65D 47/121

[N: Stoppers]

Definition statement

This subclass/group covers:

Illustrative example of subject matter classified in this group:

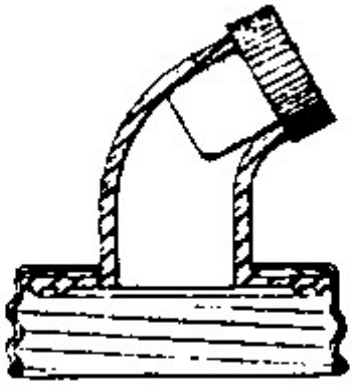

B65D 47/122

[N: Threaded caps]

Definition statement

This subclass/group covers:
Illustrative example of subject matter classified in this group:

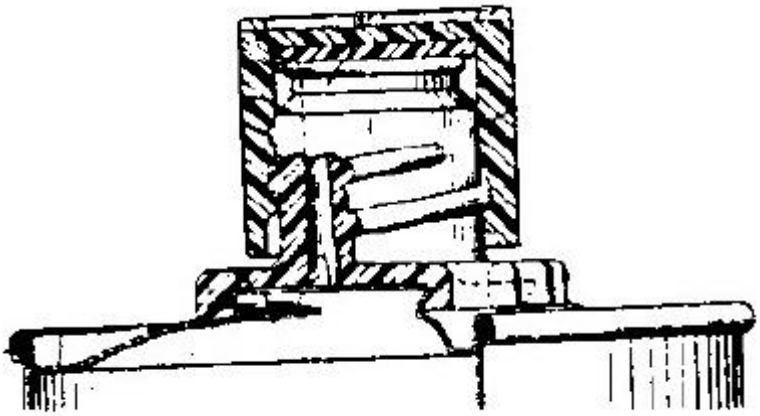

B65D 47/123

[N: with internal parts]

Definition statement

This subclass/group covers:
Illustrative example of subject matter classified in this group:

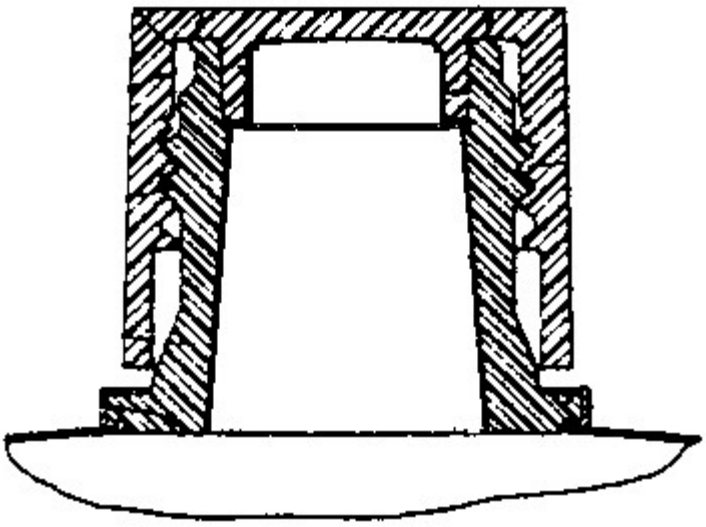

B65D 47/126

[N: with internal parts]

Definition statement

This subclass/group covers:
Illustrative example of subject matter classified in this group:

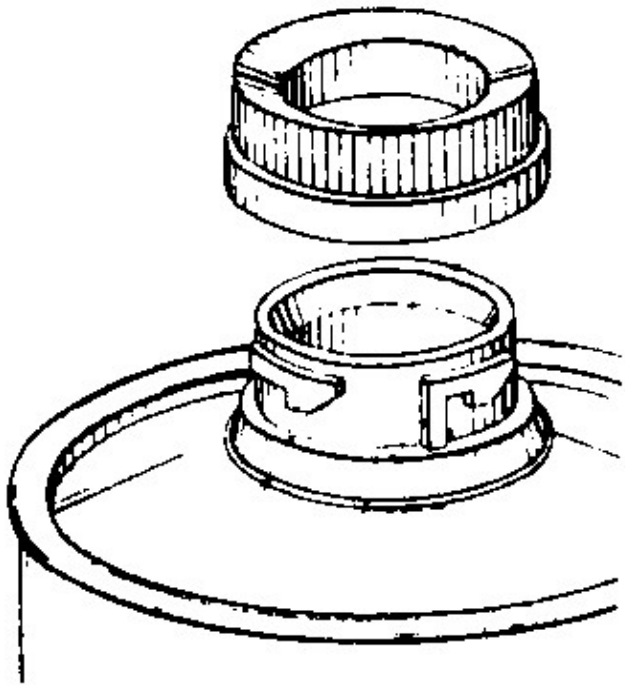

B65D 47/127

[N: Snap-on caps]

Definition statement

This subclass/group covers:
Illustrative example of subject matter classified in this group:

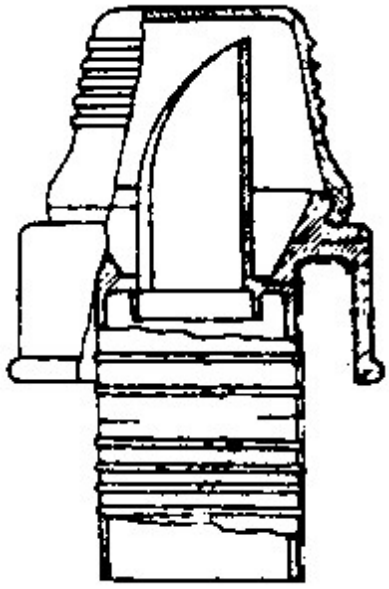

B65D 47/128

[N: with internal parts]

Definition statement

This subclass/group covers:
Illustrative example of subject matter classified in this group:

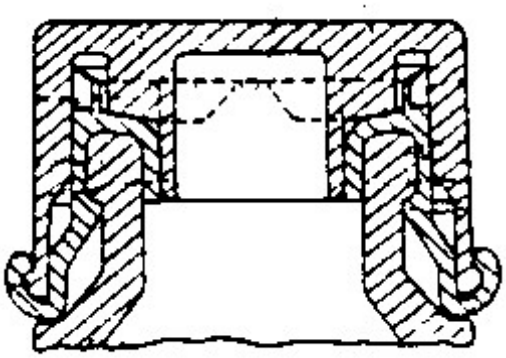

B65D 47/14

and closure-retaining means

References relevant to classification in this group

This subclass/group does not cover:

Pouring spouts or tubes; with discharge nozzles or passages having articulated or hinged closures	B65D 47/08

B65D 47/141

[N: for stoppers]

Definition statement

This subclass/group covers:

Illustrative example of subject matter classified in this group:

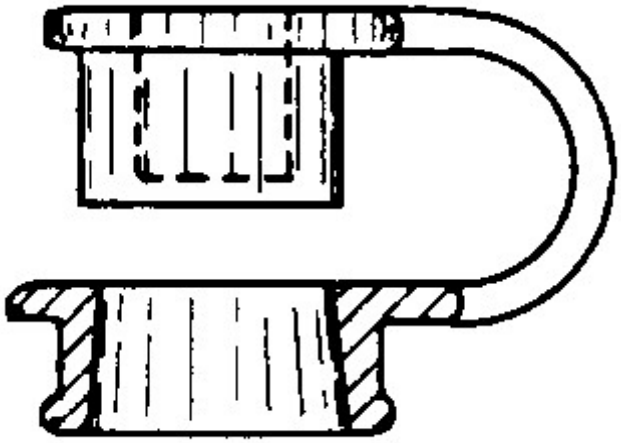

References relevant to classification in this group

This subclass/group does not cover:

With pouring spouts or tubes; with discharge nozzles or passages having articulated or hinged closures	B65D 47/08
Devices preventing loss of removable closure members by an element constrained within the container neck	B65D 55/165

B65D 47/142

[N: for threaded caps]

Definition statement

This subclass/group covers:

Illustrative example of subject matter classified in this group:

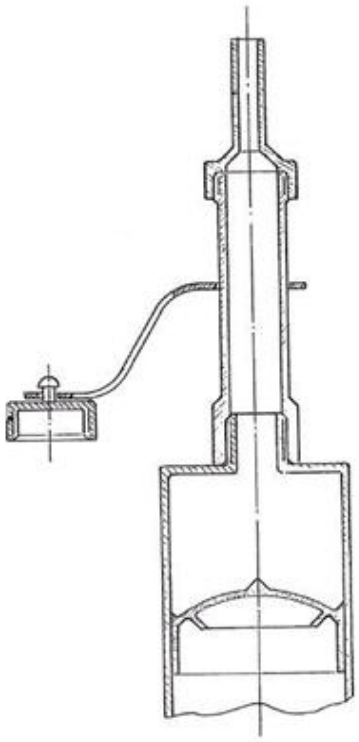

References relevant to classification in this group

This subclass/group does not cover:

With pouring spouts or tubes; with discharge nozzles or passages having articulated or hinged closures	B65D 47/08

Informative references

Attention is drawn to the following places, which may be of interest for search:

Devices preventing loss of removable closure members	B65D 55/16

B65D 47/143

[N: with internal parts]

References relevant to classification in this group

This subclass/group does not cover:

With pouring spouts or tubes; with discharge nozzles or passages having articulated or hinged closures	B65D 47/08

Informative references

Attention is drawn to the following places, which may be of interest for search:

Devices preventing loss of removable closure members	B65D 55/16

B65D 47/145

[N: for caps with bayonet cams]

References relevant to classification in this group

This subclass/group does not cover:

With pouring spouts or tubes; with discharge nozzles or passages having articulated or hinged closures	B65D 47/08

Informative references

Attention is drawn to the following places, which may be of interest for search:

Devices preventing loss of removable closure members	B65D 55/16

B65D 47/146

[N: with internal parts]

References relevant to classification in this group

This subclass/group does not cover:

With pouring spouts or tubes; with discharge nozzles or passages	B65D 47/08

having articulated or hinged closures	

Informative references

Attention is drawn to the following places, which may be of interest for search:

Devices preventing loss of removable closure members	B65D 55/16

B65D 47/147

[N: for snap-on caps]

Definition statement

This subclass/group covers:

Illustrative example of subject matter classified in this group:

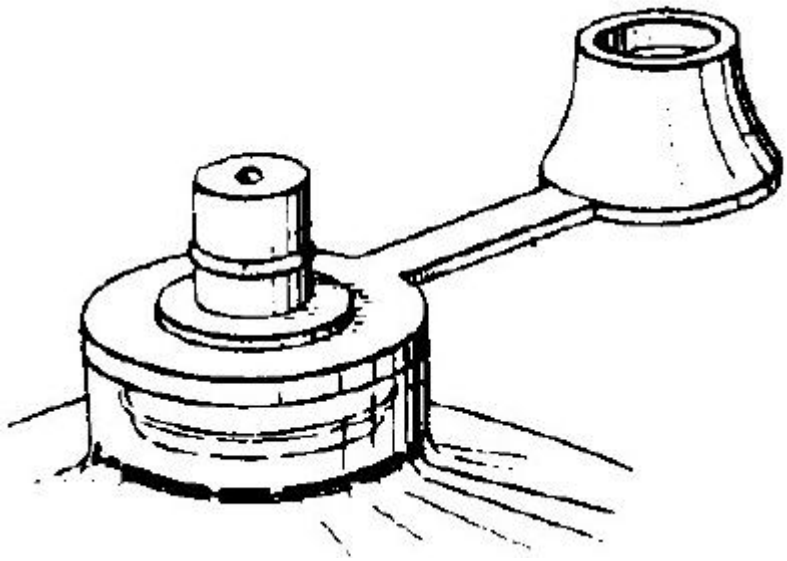

References relevant to classification in this group

This subclass/group does not cover:

With pouring spouts or tubes; with discharge nozzles or passages having articulated or hinged closures	B65D 47/08

Informative references

Attention is drawn to the following places, which may be of interest for search:

Devices preventing loss of removable closure members	B65D 55/16

Special rules of classification within this group

caps formed integrally with spout/base to be transferred to B65D 47/0842 or B65D 47/0852.

B65D 47/148

[N: with internal parts]

Definition statement

This subclass/group covers:

Illustrative example of subject matter classified in this group:

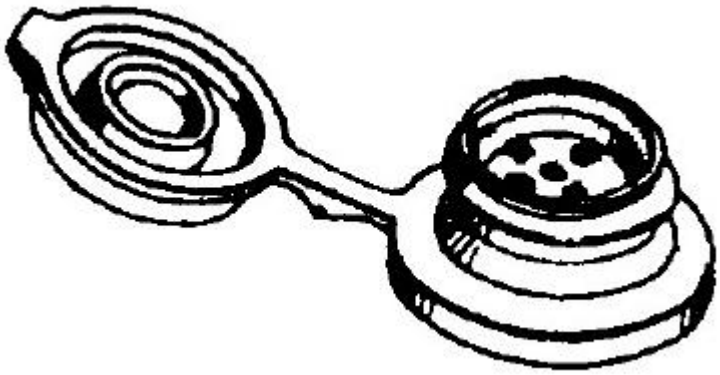

References relevant to classification in this group

This subclass/group does not cover:

With pouring spouts or tubes; with discharge nozzles or passages having articulated or hinged closures	B65D 47/08

Informative references

Attention is drawn to the following places, which may be of interest for search:

Devices preventing loss of removable	B65D 55/16

closure members	

Special rules of classification within this group

caps formed INTEGRALLY with spout/base to be transferred to B65D 47/0842 or B65D 47/0852.

B65D 47/16

with closures operating automatically when spout is immersed in discharged liquid

Definition statement

This subclass/group covers:

Illustrative example of subject matter classified in this group:

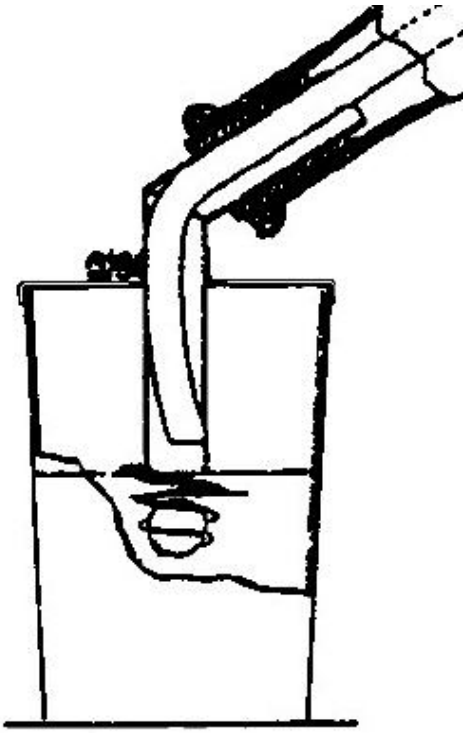

Informative references

Attention is drawn to the following places, which may be of interest for search:

Devices adding a disinfecting, deodorising, or cleaning agent to the water while flushing consisting of a separate container with an outlet through which the agent is introduced	E03D 9/03

into the flushing water	

B65D 47/18

for discharging drops; Droppers (droppers in general B01L 3/00; [N: pipettes connected to container closures B01L 3/0282])

Definition statement

This subclass/group covers:

Illustrative example of subject matter classified in this group:



References relevant to classification in this group

This subclass/group does not cover:

Eye-droppers	A61F 9/0008

Informative references

Attention is drawn to the following places, which may be of interest for search:

Droppers in general	B01L 3/00
Bottles or similar containers with necks or like restricted apertures, designed for pouring contentsadapted to discharge drops	B65D 1/08

B65D 47/185

[N: with sprinkling devices]

Definition statement

This subclass/group covers:
Illustrative example of subject matter classified in this group:

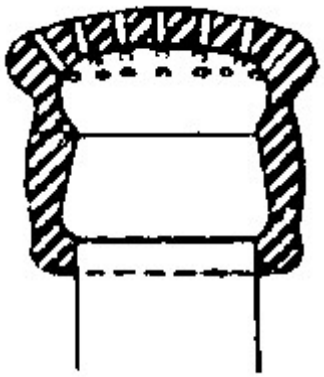

B65D 47/2006

[N: formed by a rigid spout outlet opened by tilting of the spout outlet]

Definition statement

This subclass/group covers:
Illustrative example of subject matter classified in this group:

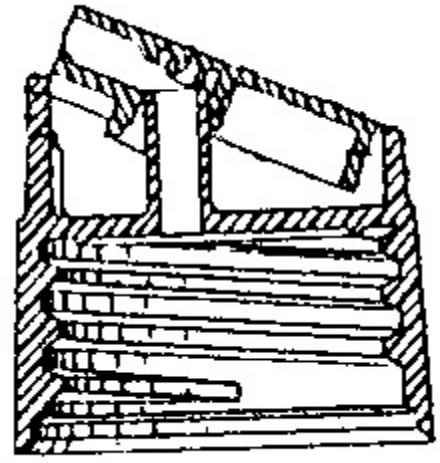

References relevant to classification in this group

This subclass/group does not cover:

´Escargot´ type spouts	B65D 47/305

Informative references

Attention is drawn to the following places, which may be of interest for search:

With pouring spouts or tubes, the spout being either flexible or having a flexible wall portion, whereby the spout is foldable between a dispensing and a non-dispensing position	B65D 47/066

B65D 47/2012

[N: formed by a rigid spout outlet and an overcap, the spout outlet being either pushed into alignment with, or pushed through an opening in the overcap, upon rotation of the latter]

Definition statement

This subclass/group covers:

Illustrative example of subject matter classified in this group:

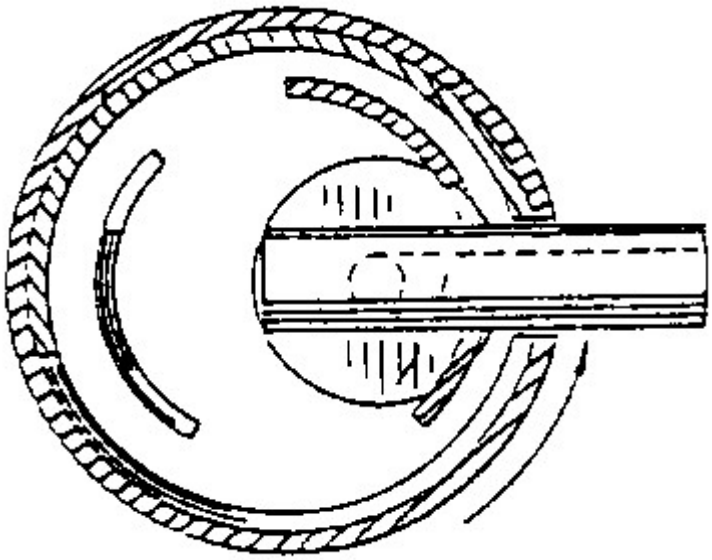

Informative references

Attention is drawn to the following places, which may be of interest for search:

A valve or like element which is opened or closed by deformation of the container or closurethe separate element being formed by an overcap which constricts a spout, the spout being either pushed into alignment with, or pushed through, an opening in the overcap upon rotation of the latter	B65D 47/2043

B65D 47/2018

[N: comprising a valve or like element which is opened or closed by deformation of the container or closure]

Informative references

Attention is drawn to the following places, which may be of interest for search:

With pouring spouts or tubes, with hinged, foldable or pivotable spouts	B65D 47/065
Flow being effected by deformation of container for liquid or other fluent material	B05B 11/04

B65D 47/2025

[N: Flexible bung-type elements]

Definition statement

This subclass/group covers:

Illustrative example of subject matter classified in this group:

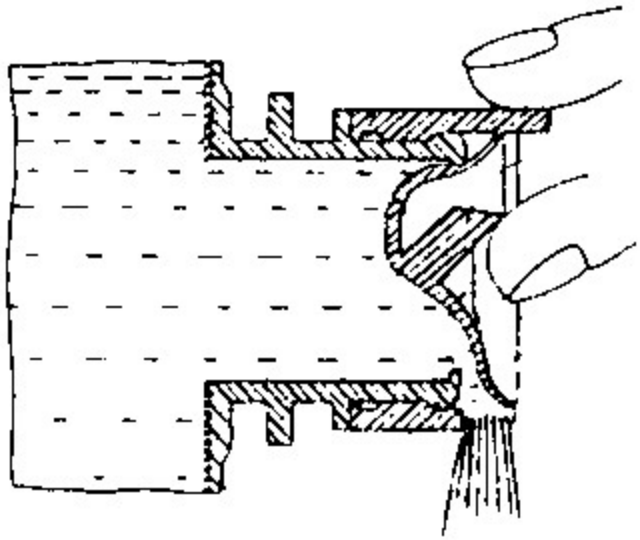

Informative references

Attention is drawn to the following places, which may be of interest for search:

Flexible containers disposed within polygonal containers formed by folding a carton blankcombined with a valve, a tap or a piercer	B65D 77/067
Liquid-dispensing taps or cocks adapted to seal and open tapping holes of casks, operated by deforming a membrane-like closing element	B67D 3/042

B65D 47/2031

[N: the element being formed by a slit, narrow opening or constrictable spout, the size of the outlet passage being able to be varied by increasing or decreasing the pressure (B65D 47/2025 takes precedence)]

Definition statement

This subclass/group covers:

Illustrative example of subject matter classified in this group:

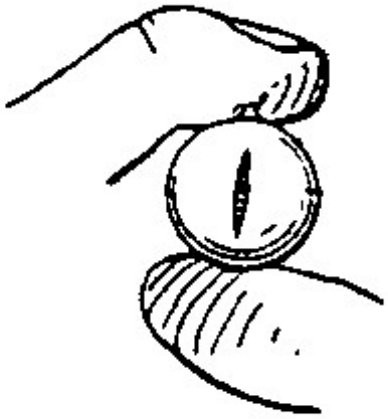

References relevant to classification in this group

This subclass/group does not cover:

Flexible bung-type elements	B65D 47/2025

Informative references

Attention is drawn to the following places, which may be of interest for search:

Venting occurs by automatic opening of the closure, container or other element the element being a valve, formed by a slit or narrow opening	B65D 51/165

B65D 47/2037

[N: the element being opened or closed by actuating a separate element which causes the deformation, e.g. screw cap closing container slit]

Definition statement

This subclass/group covers:

Illustrative example of subject matter classified in this group:

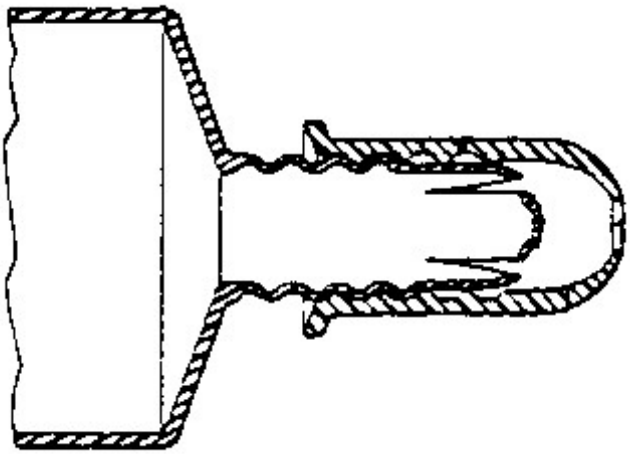

B65D 47/2043

[N: the separate element being formed by an overcap which constricts a spout, the spout being either pushed into alignment with, or pushed through, an opening in the overcap upon rotation of the latter]

Definition statement

This subclass/group covers:

Illustrative example of subject matter classified in this group:

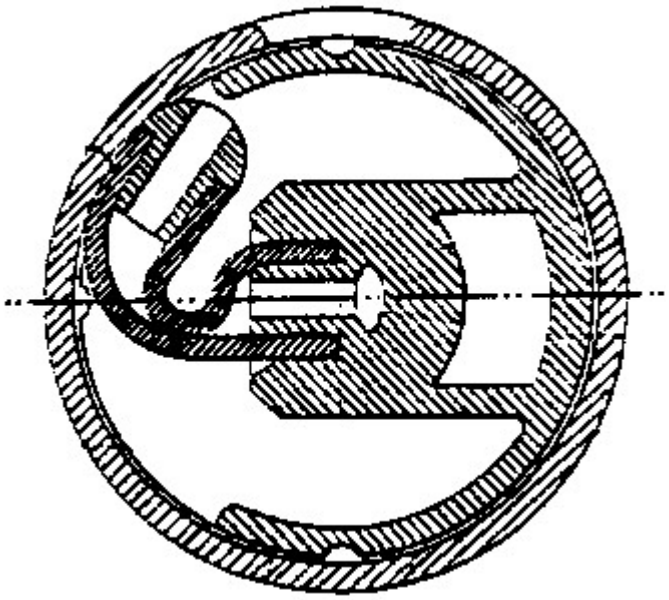

Informative references

Attention is drawn to the following places, which may be of interest for search:

Hand-operated members for controlling dischargeformed by a rigid spout outlet and an overcap, the spout outlet being either pushed into alignment with, or pushed through an opening in the overcap, upon rotation of the latter	B65D 47/2012

B65D 47/205

[N: the valve being formed by a tubular flexible sleeve surrounding a rod-like element provided with at least one radial passageway which is normally closed by the sleeve]

Definition statement

This subclass/group covers:

Illustrative example of subject matter classified in this group:

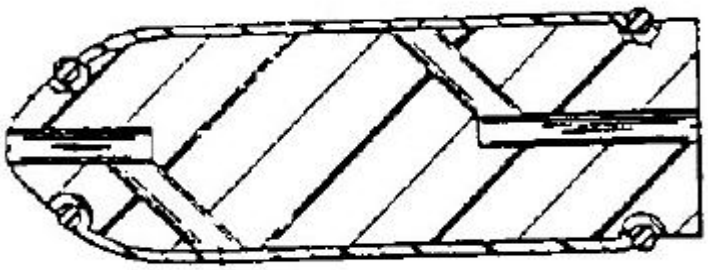

Informative references

Attention is drawn to the following places, which may be of interest for search:

Flexible check valves, the closure elements being fixed along all or a part of their periphery	F16K 15/144

B65D 47/2056

[N: lift valve type (lift valves not opened by deformation B65D 47/24)]

Informative references

Attention is drawn to the following places, which may be of interest for search:

Outlet valves actuated by the pressure of the fluid to be sprayed	B05B 11/0062
Venting occurs by automatic opening of the closure, container or other element the element being a valve	B65D 51/1644

B65D 47/2062

[N: in which the deformation raises or lowers the valve stem]

Definition statement

This subclass/group covers:

Illustrative example of subject matter classified in this group:

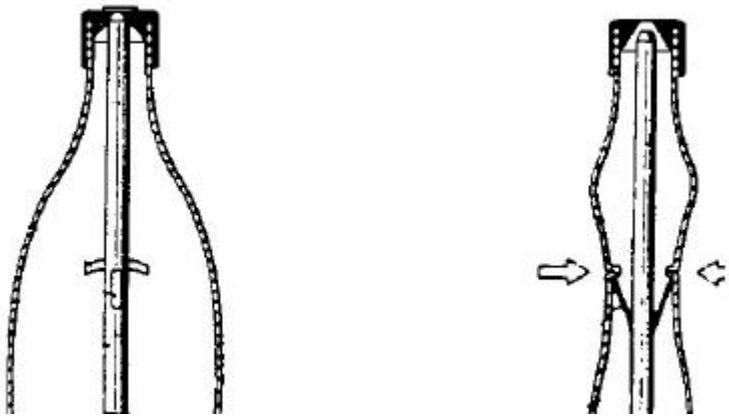

Informative references

Attention is drawn to the following places, which may be of interest for search:

Arrangements for feeding the ink to the nibs by valves automatically closing	B43K 5/1836

B65D 47/2068

[N: in which the stem is lowered by the pressure of the contents and thereby opening the valve]

Definition statement

This subclass/group covers:

Illustrative example of subject matter classified in this group:

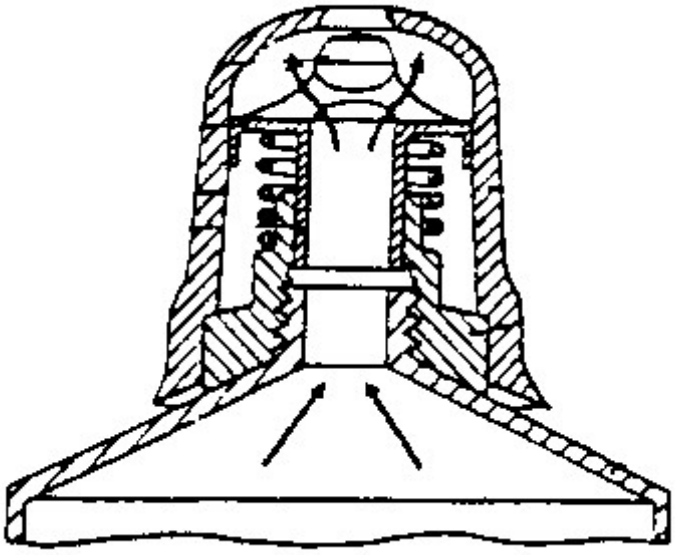

Informative references

Attention is drawn to the following places, which may be of interest for search:

With poppet valves being opened or closed by imparting a motion to the valve stem	B65D 47/248

B65D 47/2075

[N: in which the stem is raised by the pressure of the contents and thereby opening the valve]

Definition statement

This subclass/group covers:

Illustrative example of subject matter classified in this group:

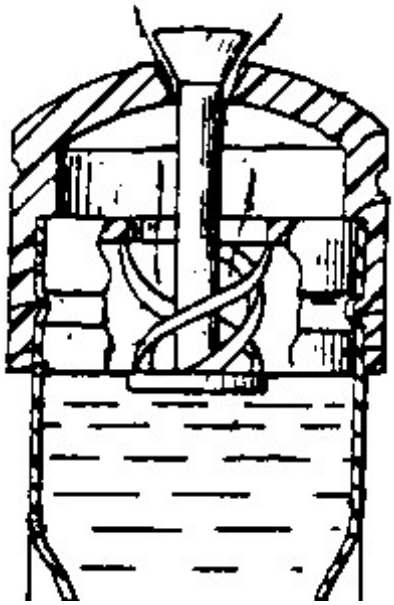

References relevant to classification in this group

This subclass/group does not cover:

Annular rings	B65D 47/2093

Informative references

Attention is drawn to the following places, which may be of interest for search:

Slide valve type	B65D 47/2093

B65D 47/2081

[N: in which the deformation raises or lowers the valve port]

Definition statement

This subclass/group covers:
Illustrative example of subject matter classified in this group:

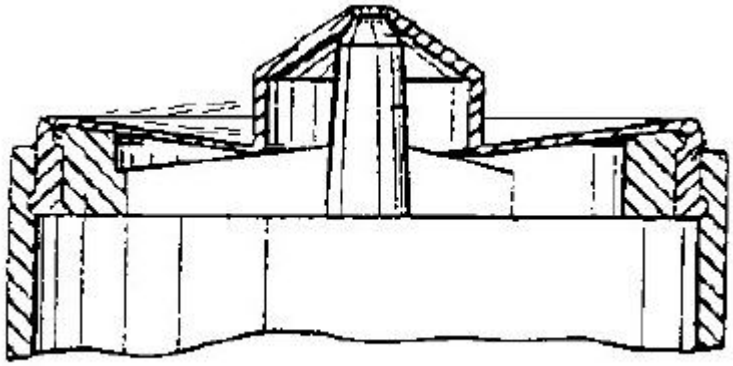

References relevant to classification in this group

This subclass/group does not cover:

Discs	B65D 47/2075

Informative references

Attention is drawn to the following places, which may be of interest for search:

Annular rings	B65D 47/2093

B65D 47/2087

[N: the port being formed by a slidable rigid cap-like element which is moved linearly by the pressure of the contents]

Definition statement

This subclass/group covers:

Illustrative example of subject matter classified in this group:

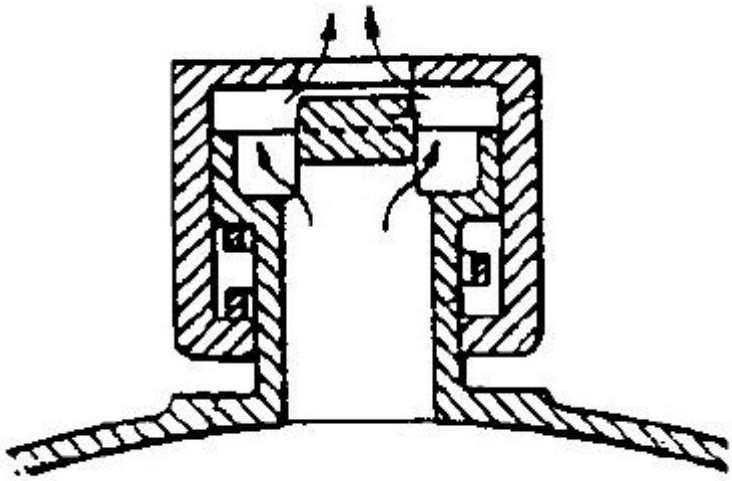

Informative references

Attention is drawn to the following places, which may be of interest for search:

Poppet valve being opened or closed by actuating a cap-like element moving linearly	B65D 47/243

B65D 47/2093

[N: slide valve type (slide valves not opened by deformation B65D 47/26)]

Definition statement

This subclass/group covers:

Illustrative example of subject matter classified in this group:

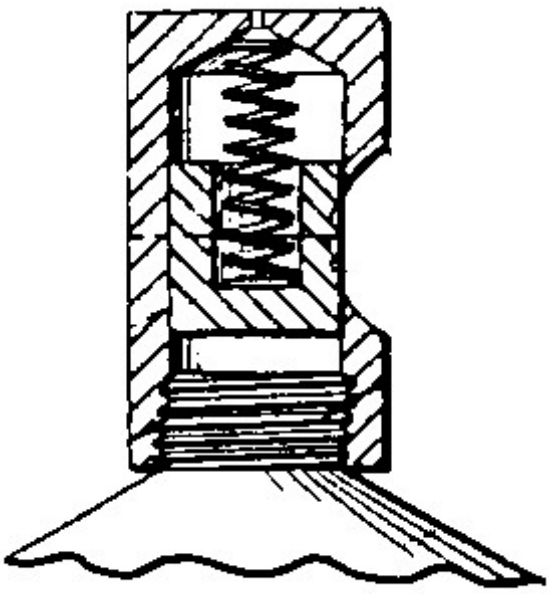

Informative references

Attention is drawn to the following places, which may be of interest for search:

Flow being effected by deformation of container for liquid or other fluent material	B05B 11/04
Hand-operated members for controlling discharge comprising a lift valve type	B65D 47/2056
With means for venting air or gas whereby venting occurs by automatic opening of the closure, container or other element, the element being a valve	B65D 51/1644

B65D 47/24

with poppet valves [N: or lift valves, i.e. valves opening or closing a passageway by a relative motion substantially perpendicular to the plane of the seat]

References relevant to classification in this group

This subclass/group does not cover:

Opened by deformation	B65D 47/2056

Informative references

Attention is drawn to the following places, which may be of interest for search:

Arrangements for feeding the ink to the nibs by valves automatically closing	B43K 5/1836

B65D 47/242

[N: moving helically]

Definition statement

This subclass/group covers:
Illustrative example of subject matter classified in this group:

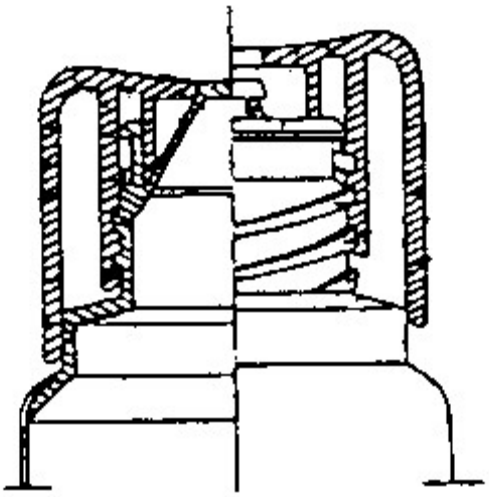

Informative references

Attention is drawn to the following places, which may be of interest for search:

The valve being opened or closed by actuating a stopper-type element moving helically	B65D 47/246

B65D 47/243

[N: moving linearly, i.e. without rotational motion]

Definition statement

This subclass/group covers:

Illustrative example of subject matter classified in this group:

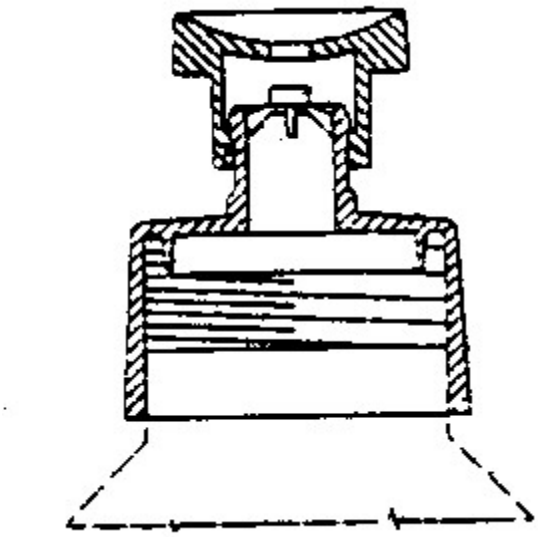

Informative references

Attention is drawn to the following places, which may be of interest for search:

The valve being opened or closed by actuating a stopper-type element moving linearly	B65D 47/247

B65D 47/244

[N: being rotated without axial translation, whilst transmitting axial motion to an internal valve stem or valve seat]

Definition statement

This subclass/group covers:

Illustrative example of subject matter classified in this group:

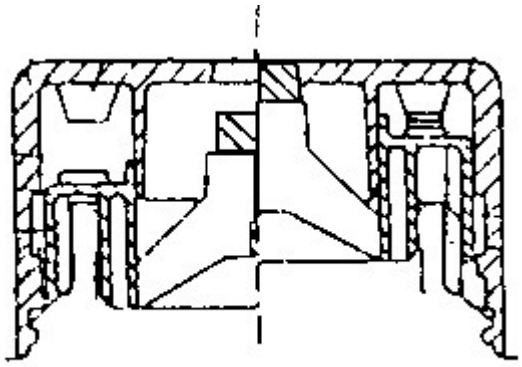

B65D 47/246

[N: moving helically, e.g. screw tap]

Definition statement

This subclass/group covers:
Illustrative example of subject matter classified in this group:

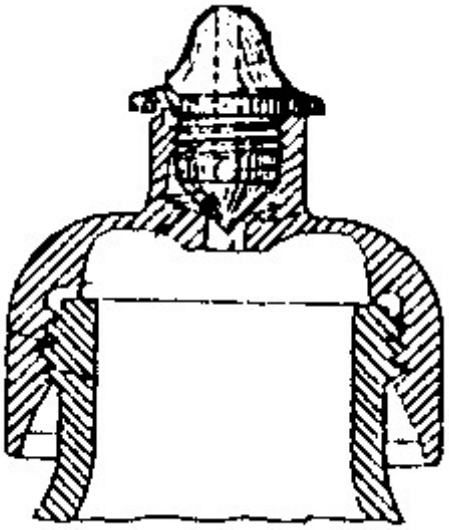

Informative references

Attention is drawn to the following places, which may be of interest for search:

The valve being opened or closed by actuating a cap-like element moving helically	B65D 47/242

B65D 47/247

[N: moving linearly, i.e. without rotational motion]

Definition statement

This subclass/group covers:

Illustrative example of subject matter classified in this group:

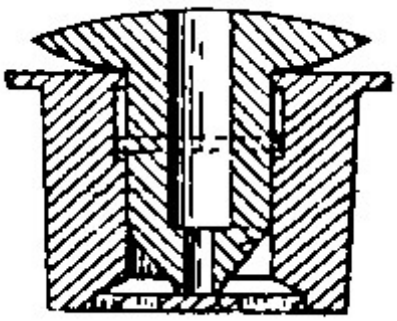

Informative references

Attention is drawn to the following places, which may be of interest for search:

The valve being opened or closed by actuating a cap-like element moving linearly	B65D 47/243

B65D 47/248

[N: the valve being opened or closed by imparting a motion to the valve stem (B65D 47/244, B65D 47/245 take precedence)]

Definition statement

This subclass/group covers:

Illustrative example of subject matter classified in this group:

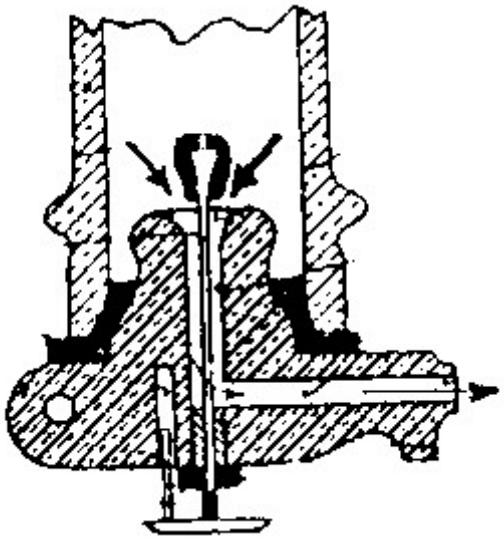

References relevant to classification in this group

This subclass/group does not cover:

The valve being opened or closed by actuating a cap-like element being rotated without axial translation, whilst transmitting axial motion to an internal valve stem or valve seat	B65D 47/244
With poppet valves the valve being opened or closed by actuating a stopper-type element	B65D 47/245
For valve construction	B65D 47/249, B67D
Valves opening upon tilting the container	B65D 51/10

Informative references

Attention is drawn to the following places, which may be of interest for search:

Lift valve type in which the deformation raises or lowers the valve stem in which the stem is lowered by the pressure of the contents and thereby opening the valve	B65D 47/2068
Arrangements for feeding the ink to the nibs by valves automatically	B43K 5/1836

closing	

B65D 47/249

[N: by means of a lever mechanism]

Definition statement

This subclass/group covers:
Illustrative example of subject matter classified in this group:

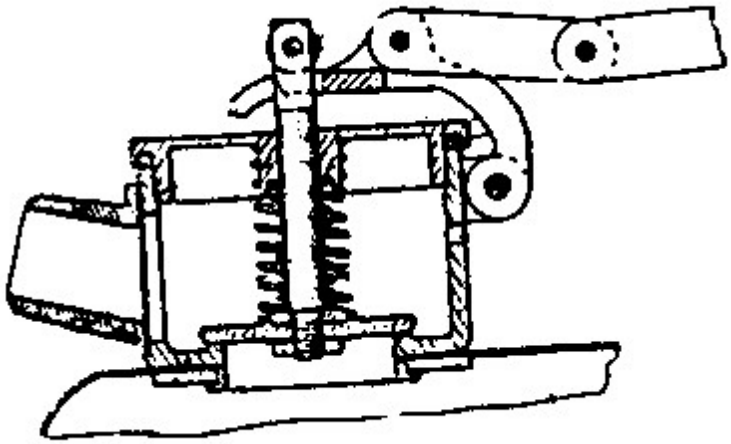

B65D 47/26

with slide valves, [N: i.e. valves that open and close a passageway by sliding over a port], e.g. formed with slidable spouts

References relevant to classification in this group

This subclass/group does not cover:

Opened by deformation	B65D 47/2093

B65D 47/261

[N: having a rotational or helicoidal movement (B65D 47/30 takes precedence)]

References relevant to classification in this group

This subclass/group does not cover:

Hand-operated members for controlling discharge with plug valves	B65D 47/30
´escargot´ type valve	B65D 47/305

B65D 47/263

[N: between tubular parts]

Definition statement

This subclass/group covers:

Illustrative example of subject matter classified in this group:

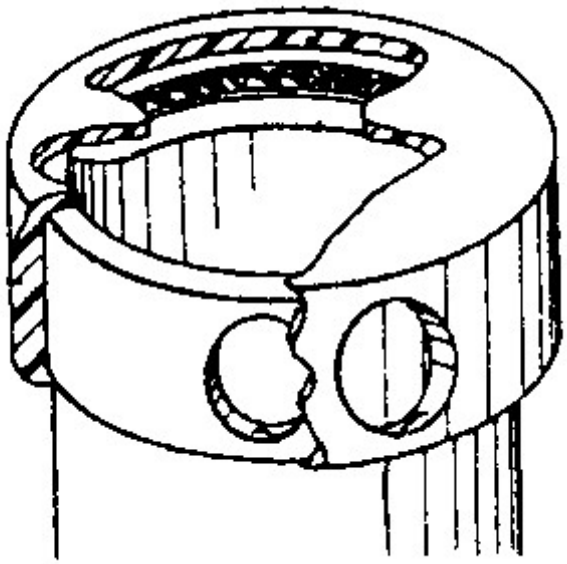

References relevant to classification in this group

This subclass/group does not cover:

Hand-operated members for controlling discharge formed by a rigid spout outlet and an overcap, the spout outlet being either pushed into alignment with, or pushed through an opening in the overcap, upon rotation of the latter	B65D 47/2012

B65D 47/265

[N: between planar parts (B65D 47/24 takes precedence)]

Definition statement

This subclass/group covers:
Illustrative example of subject matter classified in this group:

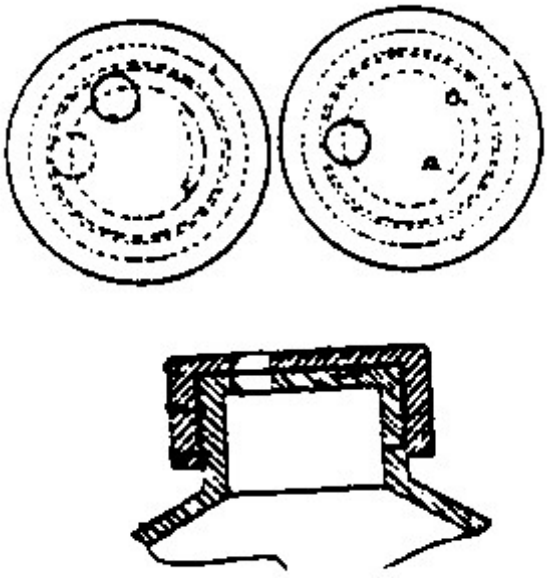

References relevant to classification in this group

This subclass/group does not cover:

Hand-operated members for controlling discharge with poppet valves	B65D 47/24

B65D 47/266

[N: the rotational movement being transmitted by displacement of an additional external element, e.g. overcap (B65D 47/265 takes precedence)]

Definition statement

This subclass/group covers:
Illustrative example of subject matter classified in this group:

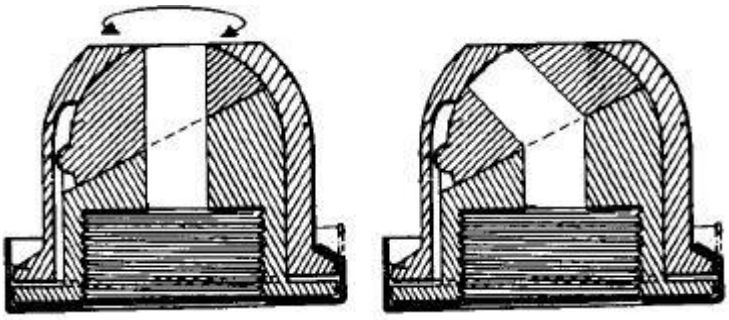

References relevant to classification in this group

This subclass/group does not cover:

Slide valves having a rotational or helicoidal movement between planar parts	B65D 47/265

B65D 47/268

[N: the valve member pivoting about an axis perpendicular to the container mouth axis (B65D 47/266 takes precedence)]

Definition statement

This subclass/group covers:

Illustrative example of subject matter classified in this group:

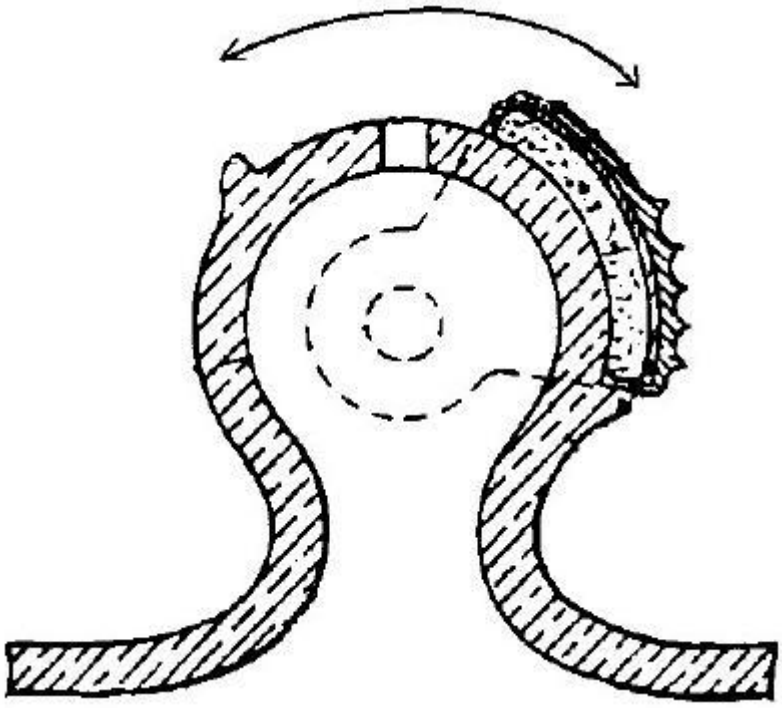

References relevant to classification in this group

This subclass/group does not cover:

With slide valves having a rotational or helicoidal movement, the rotational movement being transmitted by displacement of an additional external element	B65D 47/266

B65D 47/28

having linear movement

References relevant to classification in this group

This subclass/group does not cover:

Opened by deformation	B65D 47/2093

B65D 47/283

[N: between tubular parts]

Definition statement

This subclass/group covers:

Illustrative example of subject matter classified in this group:

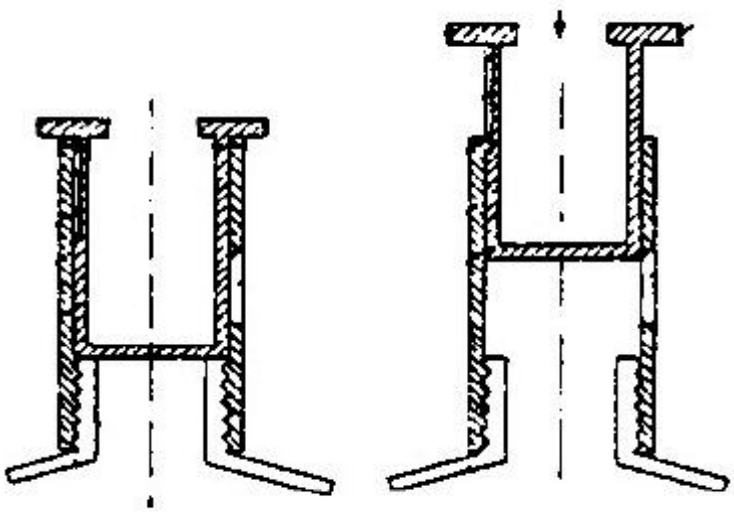

B65D 47/286

[N: between planar parts]

Definition statement

This subclass/group covers:
Illustrative example of subject matter classified in this group:

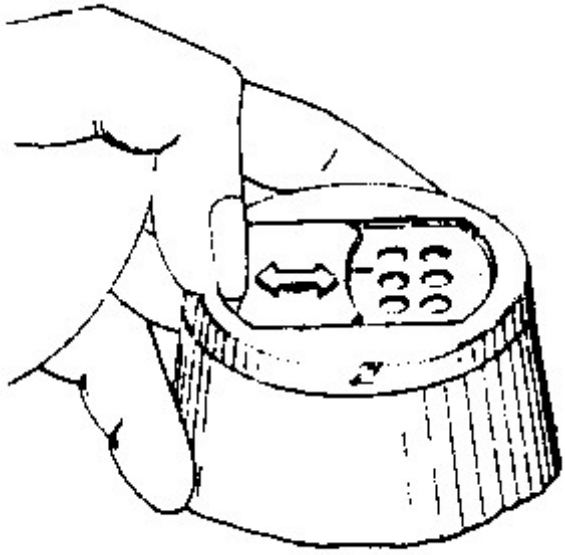

B65D 47/30

with plug valves, [N: i.e. valves that open and close a passageway by turning a cylindrical or conical plug without axial passageways]

Definition statement

This subclass/group covers:
Illustrative example of subject matter classified in this group:

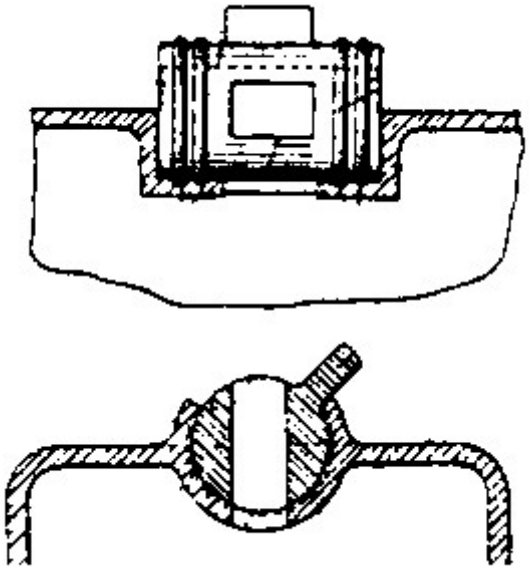

B65D 47/305

[N: provided with a spout, e.g. "escargot"-type valve]

Definition statement

This subclass/group covers:
Illustrative example of subject matter classified in this group:

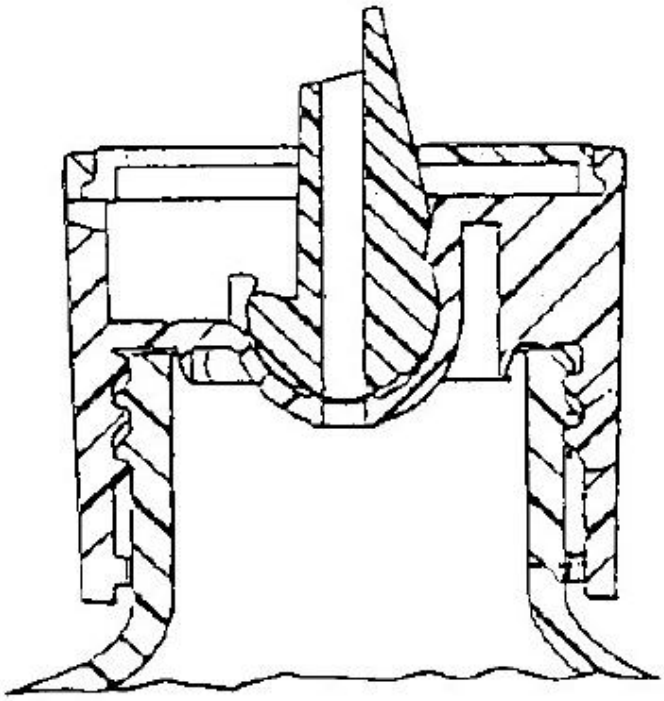

Informative references

Attention is drawn to the following places, which may be of interest for search:

Hand-operated members for controlling dischargeformed by a rigid spout outlet opened by tilting of the spout outlet	B65D 47/2006

B65D 47/32

with means for venting

Definition statement

This subclass/group covers:

Illustrative example of subject matter classified in this group:

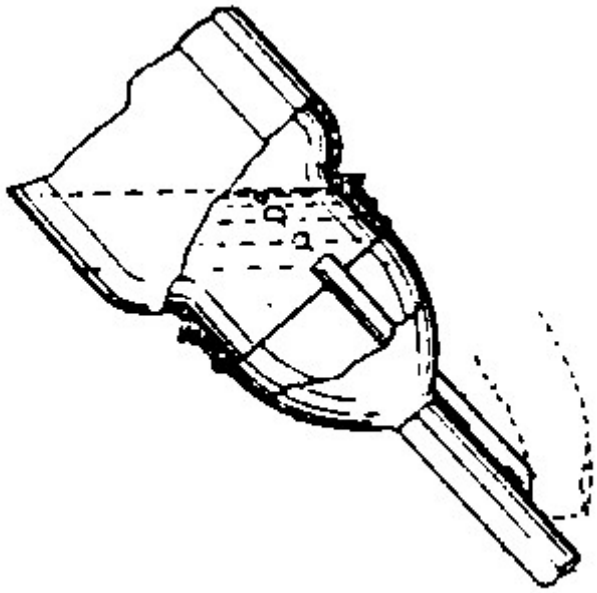

References relevant to classification in this group

This subclass/group does not cover:

Spouts with air-inlet	B65D 25/40
For discharging drops	B65D 47/18
Air-inlet valves opening during dispensing	B65D 51/1644, B65D 51/165

Informative references

Attention is drawn to the following places, which may be of interest for search:

Venting means	B65D 2205/00

B65D 47/36

Closures with frangible parts adapted to be pierced, torn, or removed, to provide discharge openings (B65D 51/18 takes precedence; caps with piercable membranes B65D 41/20, B65D 41/50)

Definition statement

This subclass/group covers:

Illustrative example of subject matter classified in this group:

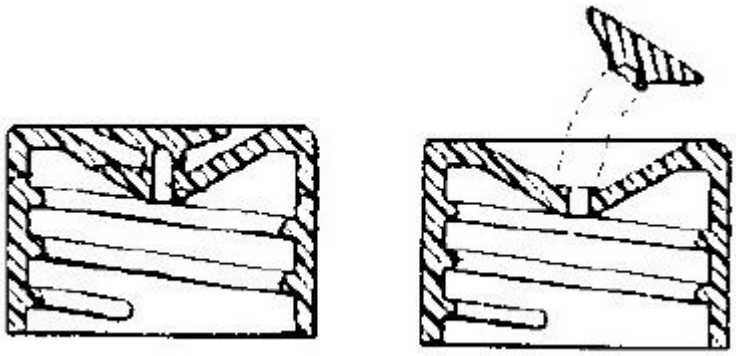

References relevant to classification in this group

This subclass/group does not cover:

Arrangements of closures with protective outer cap-like covers or of two or more co-operating closures	B65D 51/18

Informative references

Attention is drawn to the following places, which may be of interest for search:

With pouring spouts or tubes, with discharge nozzles or passages having frangible closures	B65D 47/10

B65D 47/38

with piercing means arranged to act subsequently as a valve to control the opening

Definition statement

This subclass/group covers:

Illustrative example of subject matter classified in this group:

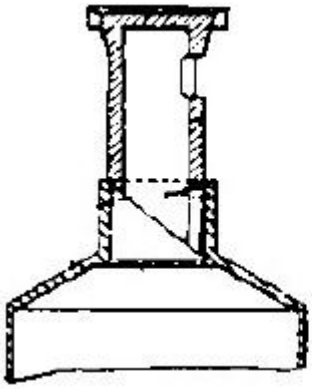

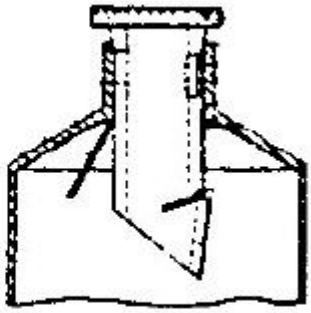

B65D 47/40

with drip catchers or drip-preventing means

Definition statement

This subclass/group covers:

Illustrative example of subject matter classified in this group:

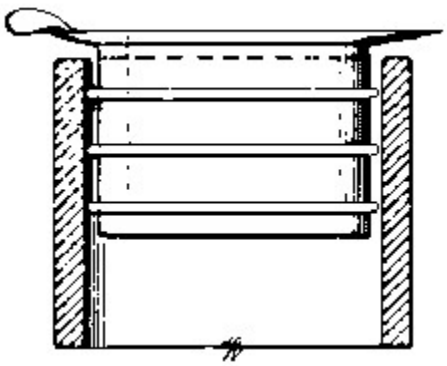

References relevant to classification in this group

This subclass/group does not cover:

For discharging drops	B65D 47/18

Informative references

Attention is drawn to the following places, which may be of interest for search:

Integral drip catchers or drip-preventing means	B65D 23/06

B65D 47/42

with pads or like contents-applying means ([N: contents-applying means associated to aerosol container nozzles B65D 83/285;] brushes combined or associated with containers A46B 11/00; swabs for applying media to the human body from an integral supply A61F13/40)

Definition statement

This subclass/group covers:

Illustrative example of subject matter classified in this group:

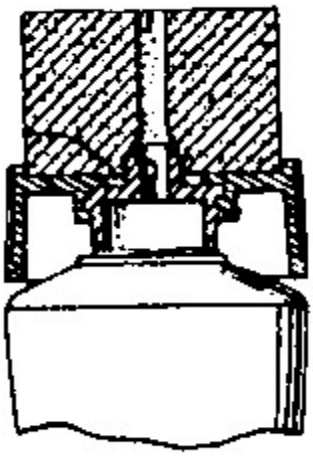

References relevant to classification in this group

This subclass/group does not cover:

Containers specially adapted for applying liquid using a roller or a ball	A45D 34/041, A45D 34/042

Hand implements for shoe-cleaning with applicators for shoe polish	A47L 23/05

Examples of places where the subject matter of this group is covered when specially adapted, used for a particular purpose, or incorporates in a larger system:

Swabs for applying media to the human body from an integral supply	**A61F13/40**

Informative references

Attention is drawn to the following places, which may be of interest for search:

With auxiliary devices for applying contents to surfaces	B65D 35/36

B65D 47/44

combined with slits opening when container is deformed or when pad is pressed against surface to which contents are to be applied (pliable tubular containers with valves opening when closure is pressed against surfaces [N: (B65D35/54 not used) B65D 47/248])

Definition statement

This subclass/group covers:

Illustrative example of subject matter classified in this group:

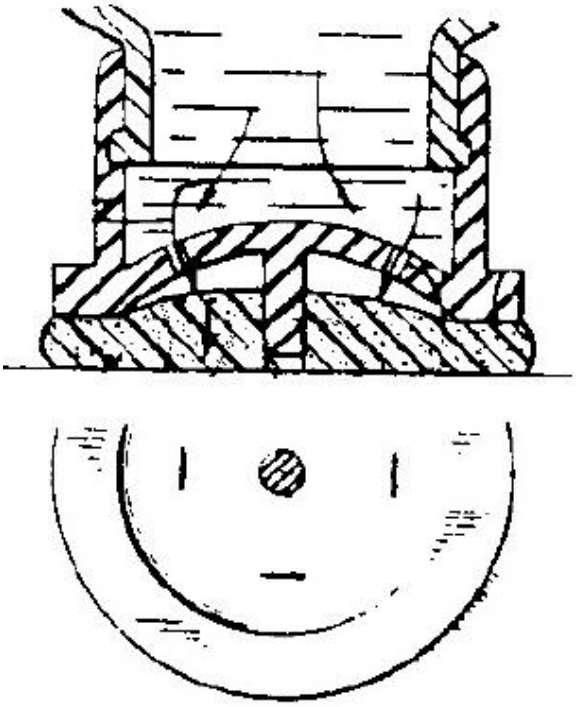

References relevant to classification in this group

This subclass/group does not cover:

For cleaning or polishing shoes	A47L 23/04

B65D 49/00

Arrangements or devices for preventing refilling of containers (integral, or permanently secured, closures for containers specially adapted to be opened by cutting, piercing, or tearing of wall portions B65D 17/00; for initial filling and for preventing subsequent refilling B65D 47/02)

Informative references

Attention is drawn to the following places, which may be of interest for search:

Integral, or permanently secured, closures for containers specially adapted to be opened by cutting, piercing, or tearing of wall portions	B65D 17/00

B65D 49/04

Weighted valves

Definition statement

This subclass/group covers:
Illustrative example of subject matter classified in this group:

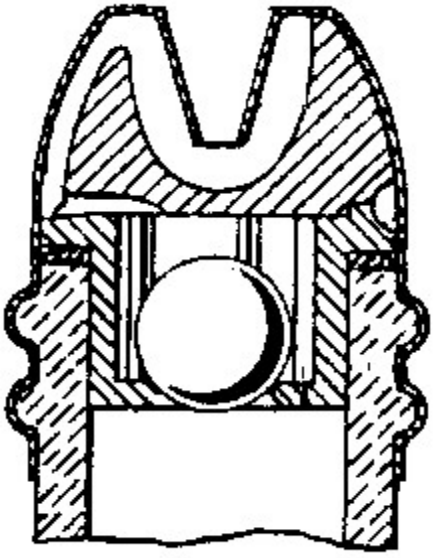

B65D 49/06

with additional loading weights

Definition statement

This subclass/group covers:
Illustrative example of subject matter classified in this group:

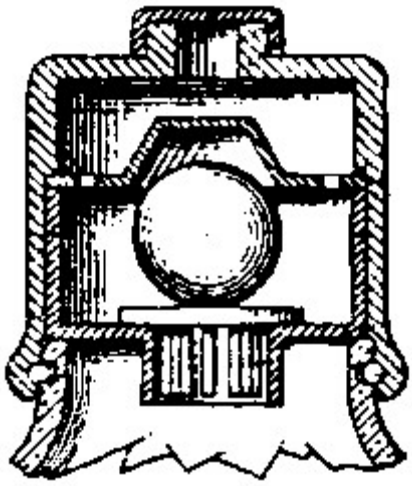

B65D 49/08

Spring-loaded valves

Definition statement

This subclass/group covers:
Illustrative example of subject matter classified in this group:

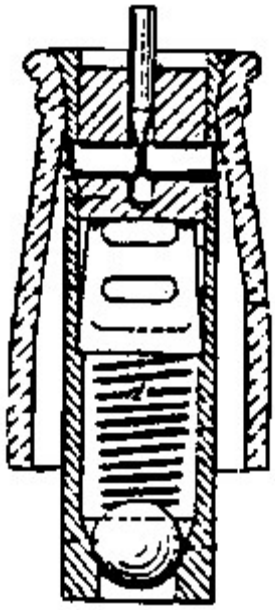

B65D 49/10

Arrangements of several valves

Definition statement

This subclass/group covers:
Illustrative example of subject matter classified in this group:

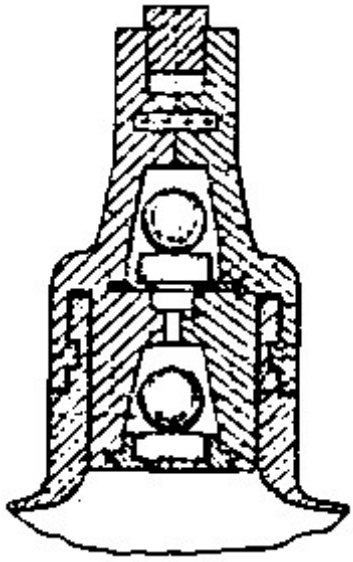

B65D 49/12

by destroying, in the act of opening the container, an integral portion thereof

Definition statement

This subclass/group covers:

Illustrative example of subject matter classified in this group:

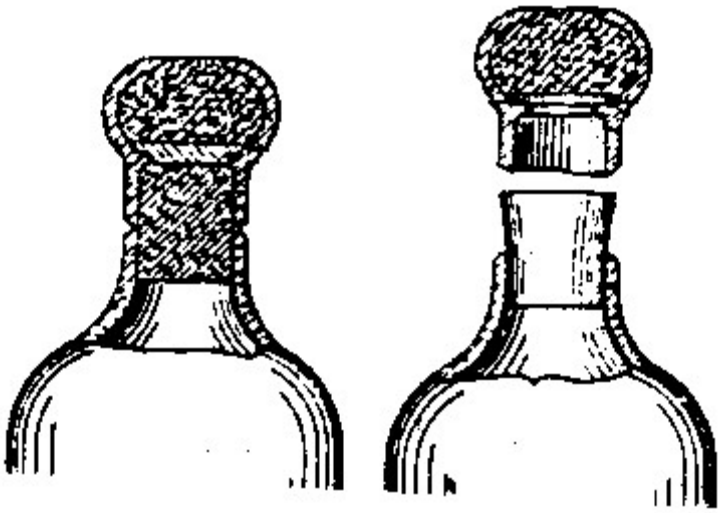

Informative references

Attention is drawn to the following places, which may be of interest for search:

Integral frangible closures	B65D 1/0238

B65D 50/04

requiring the combination of simultaneous actions, e.g. depress and turn, lift and turn, maintain a part and turn another one (caps or covers secured by rotation with bayonet cams B65D 41/06, B65D 41/36)

Informative references

Attention is drawn to the following places, which may be of interest for search:

Child-proof means requiring the combination of simultaneous actions	B65D 2215/02

B65D 50/041

[N: the closure comprising nested inner and outer caps or an inner cap and an outer coaxial annular member, which can be brought into engagement to enable removal by rotation]

Definition statement

This subclass/group covers:

Illustrative example of subject matter classified in this group:

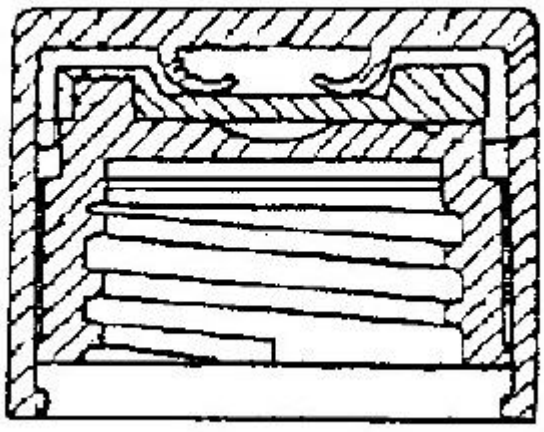

Informative references

Attention is drawn to the following places, which may be of interest for search:

The closure comprising an inner	B65D 50/068

closure and a freely rotating outer cap or sleeve whereby a tool, key or the like is inserted between the two closure elements to enable removal of the closure	

B65D 50/043

[N: the closure comprising a screw cap whose threads are shaped to accommodate blocking elements and the closure is removed after first applying axial force to unblock it and allow it to be unscrewed]

Definition statement

This subclass/group covers:

Illustrative example of subject matter classified in this group:

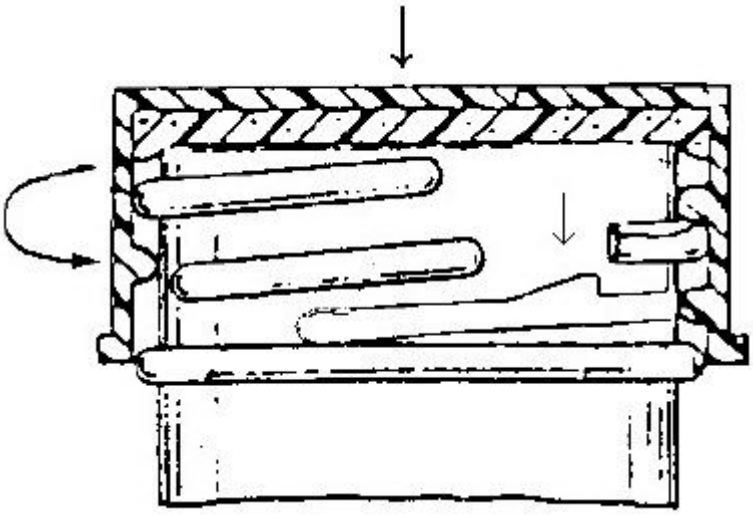

Informative references

Attention is drawn to the following places, which may be of interest for search:

Threaded or like caps or cap-like covers secured by rotation with means for positioning the cap on the container, or for limiting the movement of the cap, or for preventing accidental loosening of the cap	B65D 41/0471

B65D 50/045

[N: where one action elastically deforms or deflects at least part of the closure, the container or an intermediate element, e.g. a ring (B65D 50/041, B65D 50/043 take precedence)]

Definition statement

This subclass/group covers:

Illustrative example of subject matter classified in this group:

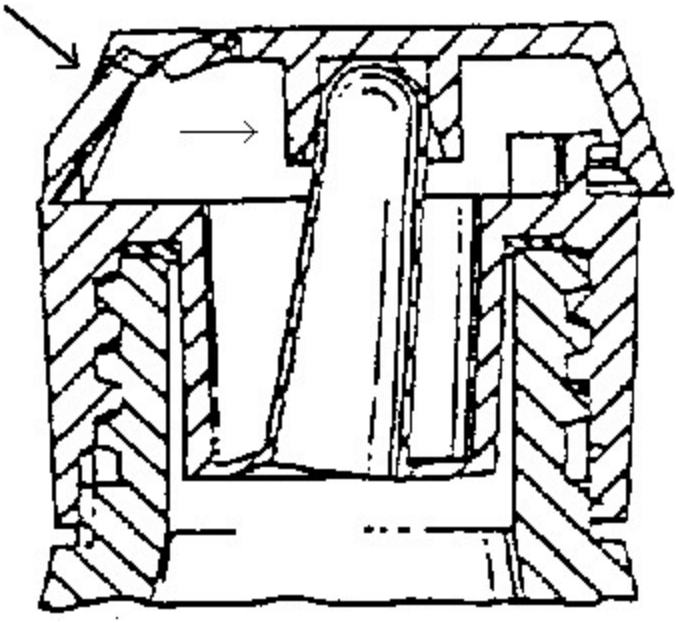

References relevant to classification in this group

This subclass/group does not cover:

The closure comprising nested inner and outer caps or an inner cap and an outer coaxial annular member, which can be brought into engagement to enable removal by rotation	B65D 50/041
The closure comprising a screw cap whose threads are shaped to accommodate blocking elements and the closure is removed after first applying axial force to unblock it and allow it to be unscrewed	B65D 50/043

B65D 50/046

[N: and such deformation causes the disengagement of locking means, e.g. the release of a pawl-like element from a tooth or abutment, to allow removal of the closure by simultaneous rotation]

Definition statement

This subclass/group covers:

Illustrative example of subject matter classified in this group:

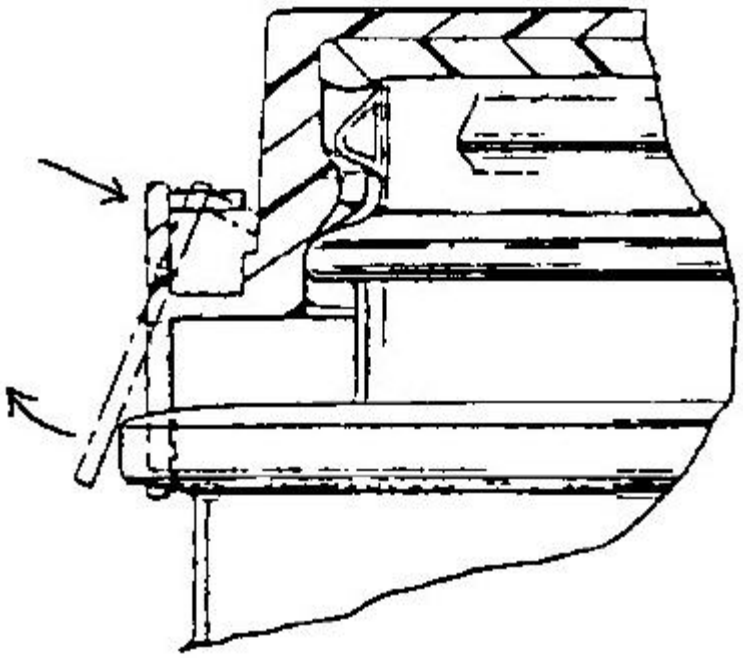

B65D 50/048

[N: and such deformation causes the engagement of means, e.g. threads, to allow removal of the closure by simultaneous rotation]

Definition statement

This subclass/group covers:

Illustrative example of subject matter classified in this group:

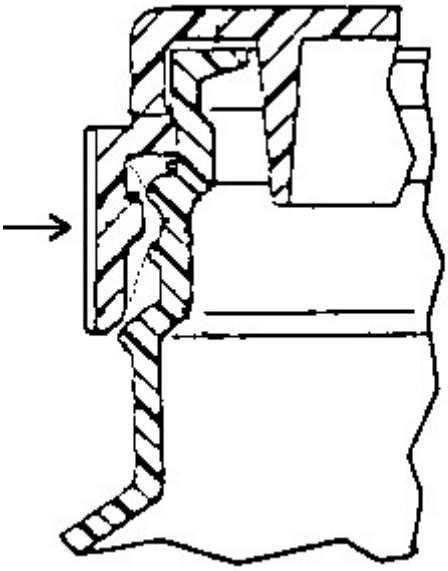

B65D 50/061

[N: being disengageable from container only after rotational alignment of closure, or other means inhibiting removal of closure, with container, e.g. tortuous path type (B65D 55/145 takes precedence)]

Definition statement

This subclass/group covers:

Illustrative example of subject matter classified in this group:

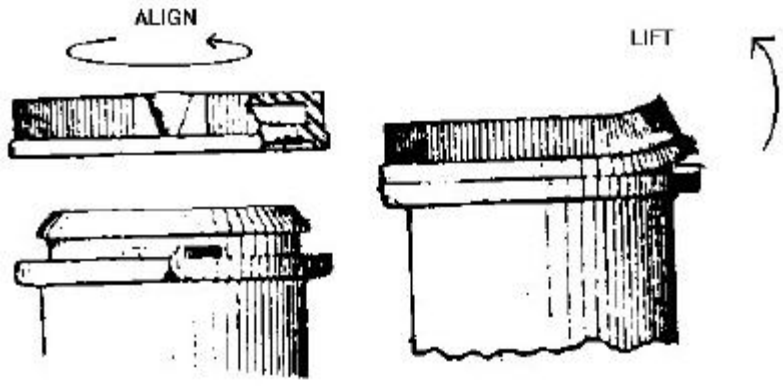

References relevant to classification in this group

This subclass/group does not cover:

Applications of permutation locks	B65D 55/145

B65D 50/062

[N: the closure removal inhibiting means being a displaceable ring]

Definition statement

This subclass/group covers:

Illustrative example of subject matter classified in this group:

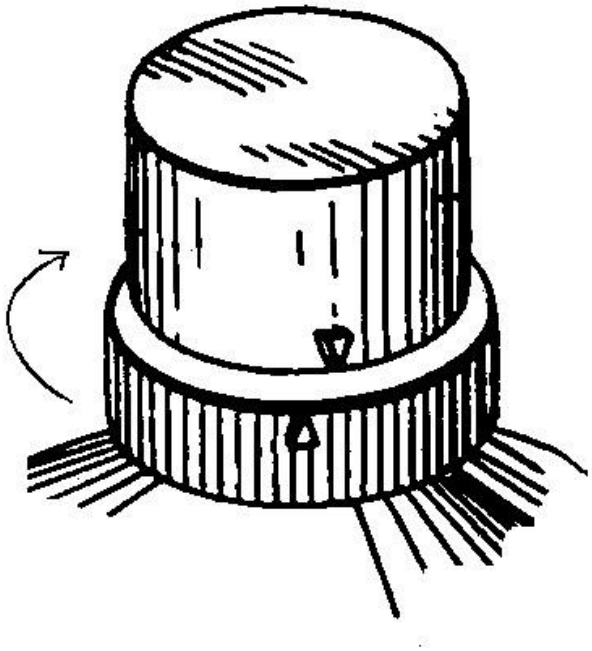

B65D 50/063

[N: the closure or container being provided with two spaced sets of screw threads or the like]

Definition statement

This subclass/group covers:

Illustrative example of subject matter classified in this group:

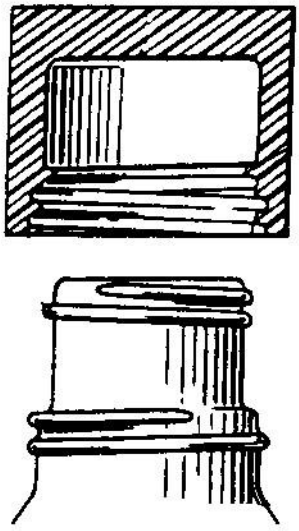

B65D 50/064

[N: at least one of the sets of threads being formed in a separate ring]

Definition statement

This subclass/group covers:

Illustrative example of subject matter classified in this group:

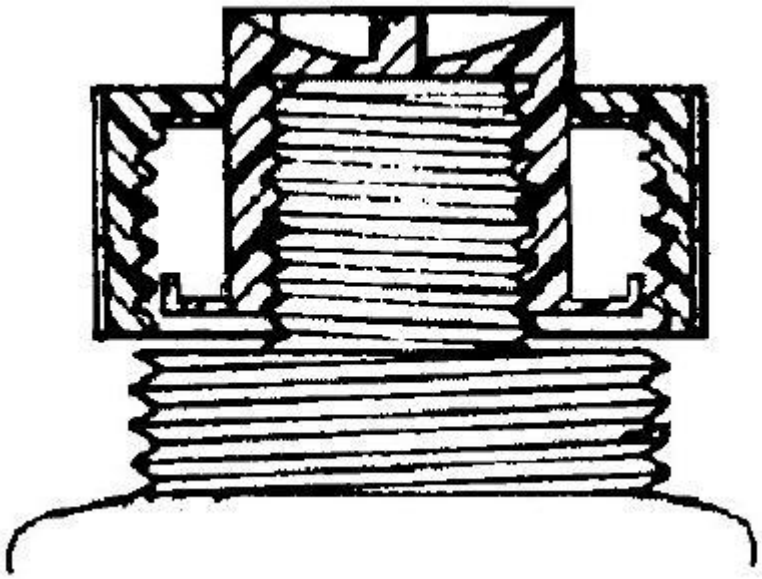

B65D 50/065

[N: with separate ring having to be axially displaced to permit user to access closure (B65D 50/062, B65D 50/064 take precedence; radial pressure applying means B65D 45/32)]

Definition statement

This subclass/group covers:

Illustrative example of subject matter classified in this group:

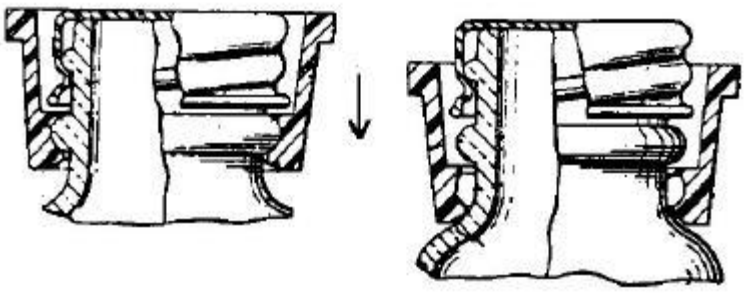

References relevant to classification in this group

This subclass/group does not cover:

The closure removal inhibiting means being a displaceable ring	B65D 50/062
At least one of the sets of threads being formed in a separate ring	B65D 50/064

B65D 50/066

[N: whereby parts of the container or closure having to be deformed, i.e. bi-stable movement (B65D 50/045 takes precedence)]

Definition statement

This subclass/group covers:

Illustrative example of subject matter classified in this group:

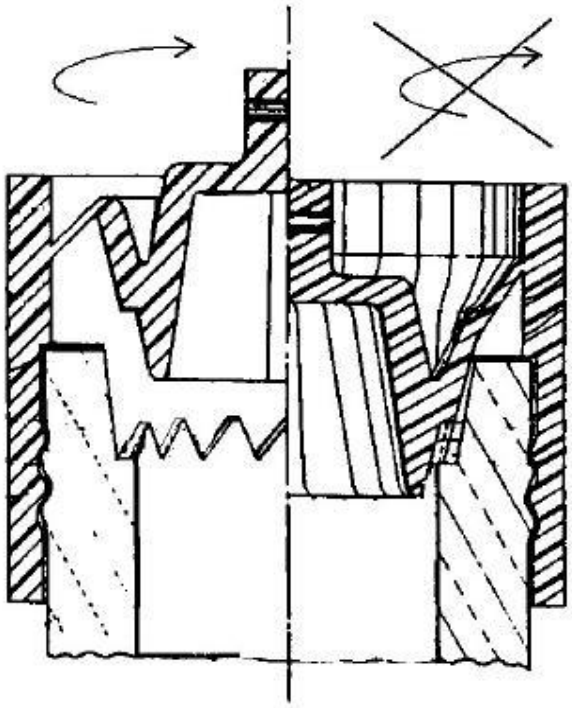

References relevant to classification in this group

This subclass/group does not cover:

Where one action elastically deforms or deflects at least part of the closure, the container or an intermediate element	B65D 50/045

B65D 50/067

[N: using integral or non-integral accessories, e.g. tool, key (B65D 50/062,B65D 50/064, B65D 50/065 take precedence)]

References relevant to classification in this group

This subclass/group does not cover:

The closure removal inhibiting means being a displaceable ring	B65D 50/062
At least one of the sets of threads being formed in a separate ring	B65D 50/064
With separate ring having to be axially displaced to permit user to access closure	B65D 50/065

Informative references

Attention is drawn to the following places, which may be of interest for search:

Means for facilitating removing of the closureby means of a coin or other tool in recesses or similar on container or lid	B65D 2543/00898

B65D 50/068

[N: the closure comprising an inner closure and a freely rotating outer cap or sleeve whereby a tool, key or the like is inserted between the two closure elements to enable removal of the closure]

Definition statement

This subclass/group covers:

Illustrative example of subject matter classified in this group:

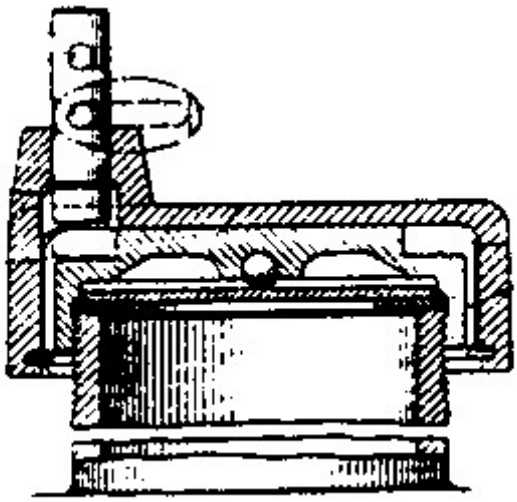

Informative references

Attention is drawn to the following places, which may be of interest for search:

The closure comprising nested inner and outer caps or an inner cap and an outer coaxial annular member, which can be brought into	B65D 50/041

engagement to enable removal by rotation	

B65D 50/069

[N: the closure being provided with a retractable element whereby the closure is removed by extending or raising the retractable element and exerting a lifting force on this element]

Definition statement

This subclass/group covers:

Illustrative example of subject matter classified in this group:

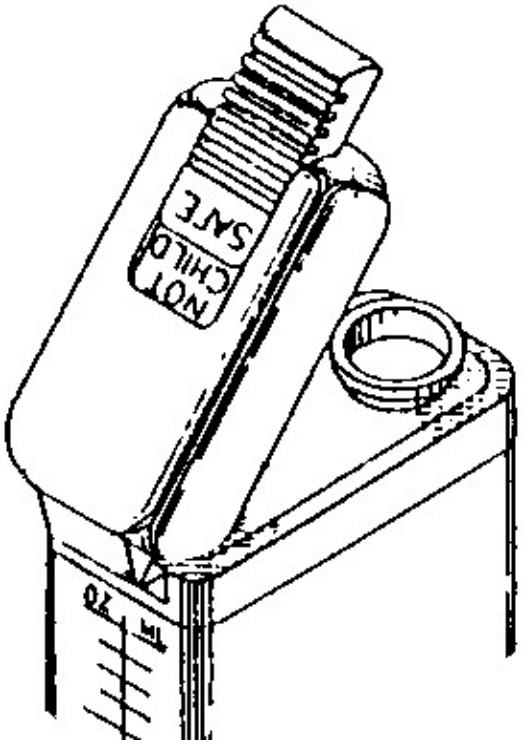

Informative references

Attention is drawn to the following places, which may be of interest for search:

Requiring the combination of simultaneous actions, e.g. depress and turn, lift and turn, maintain a part and turn another one	B65D 50/04

B65D 51/00

Closures not otherwise provided for (covers or similar closures as engineering elements for pressure vessels in general F16J 13/00)

References relevant to classification in this group

This subclass/group does not cover:

Closures having deformable parts for neutralising internal pressure variations	B65D 79/005

B65D 51/002

[N: Closures to be pierced by an extracting-device for the contents and fixed on the container by separate retaining means]

Definition statement

This subclass/group covers:

Illustrative example of subject matter classified in this group:

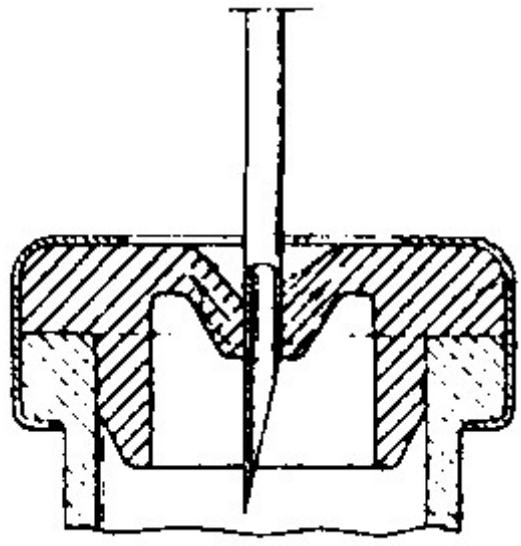

Informative references

Attention is drawn to the following places, which may be of interest for search:

Details, e.g. inlet or outlet ports,	A61J 1/14

provisions for hanging, shape retaining means	
Septums, pierceable membranes	A61J 1/1406
The partition being in the form of a plug or the like which is removed by increasing or decreasing the pressure within the container	B65D 25/082
Caps or cap-like covers with membranes	B65D 41/20

B65D 51/005

[N: Closures provided with linings or internal coatings so as to avoid contact of the closure with the contents]

Definition statement

This subclass/group covers:

Illustrative example of subject matter classified in this group:

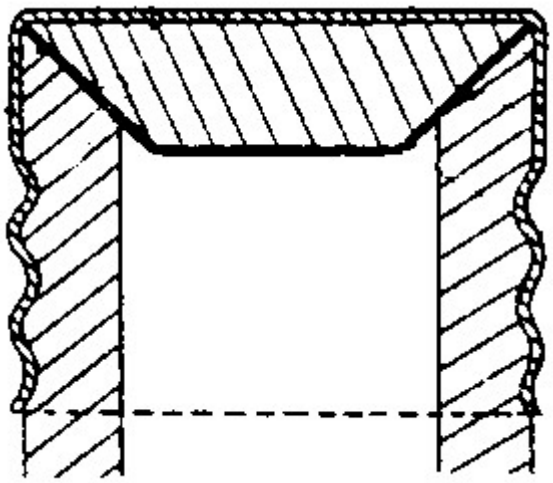

B65D 51/007

[N: Separate closure devices for reclosing opened cans or tins, e.g. beer cans]

Definition statement

This subclass/group covers:

Illustrative example of subject matter classified in this group:

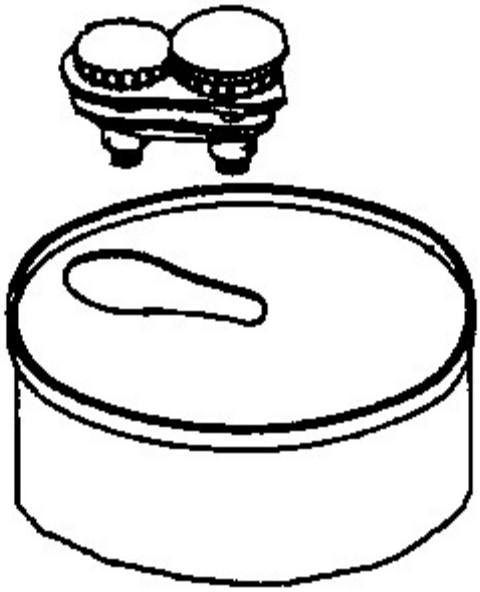

Informative references

Attention is drawn to the following places, which may be of interest for search:

Rigid or semi-rigid members	B65D 17/506
Two or more closures	B65D 2251/0003
Reclosable openings with the plug being reinsertable into the opening	B65D 2517/0038
Reclosable openings by means of an additional element in the form of a plug	B65D 2517/0043

B65D 51/04

hinged (B65D 51/10 takes precedence)

Definition statement

This subclass/group covers:

Illustrative example of subject matter classified in this group:

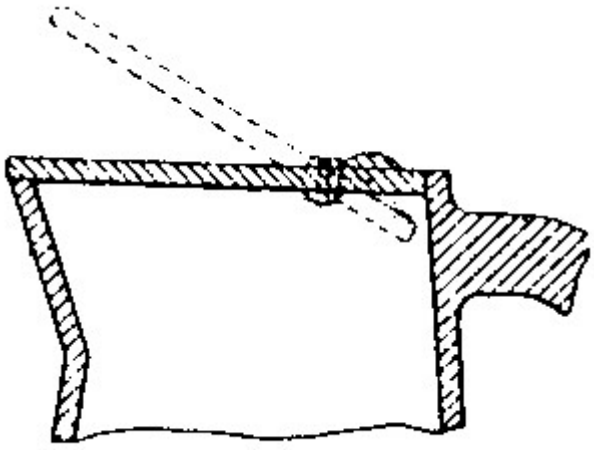

References relevant to classification in this group

This subclass/group does not cover:

Loosely-engaging lids or covers for jars, cans, or like opening automatically when container is tilted for pouring	B65D 51/10

B65D 51/08

with axial projections fitting within, or around, the walls defining the openings, e.g. for milk churns

Definition statement

This subclass/group covers:

Illustrative example of subject matter classified in this group:

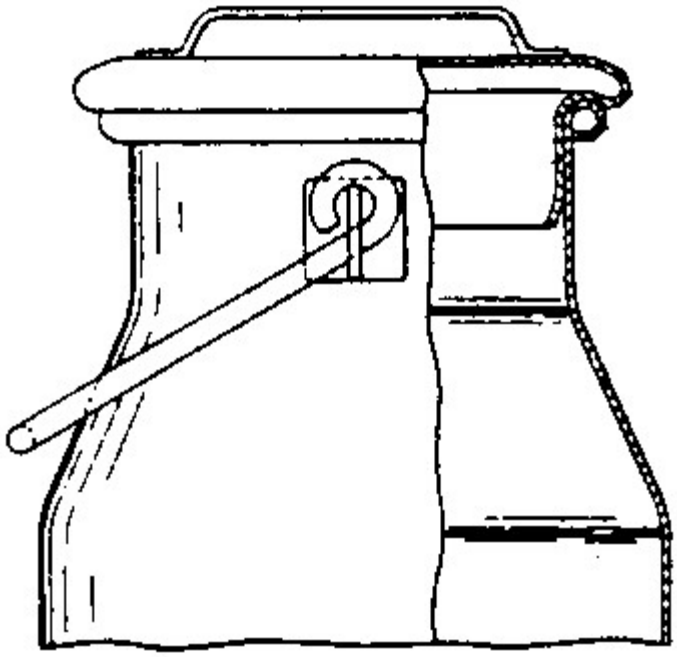

B65D 51/10

opening automatically when container is tilted for pouring

Definition statement

This subclass/group covers:
Illustrative example of subject matter classified in this group:

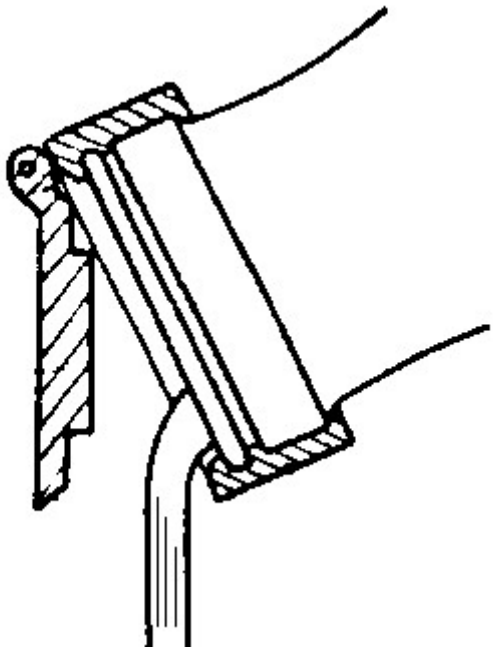

References relevant to classification in this group

This subclass/group does not cover:

Floating covers	B65D 81/245

B65D 51/14

Rigid discs or spherical members adapted to be held in sealing engagement with mouth of container, e.g. closure plates for preserving jars

Definition statement

This subclass/group covers:

Illustrative example of subject matter classified in this group:

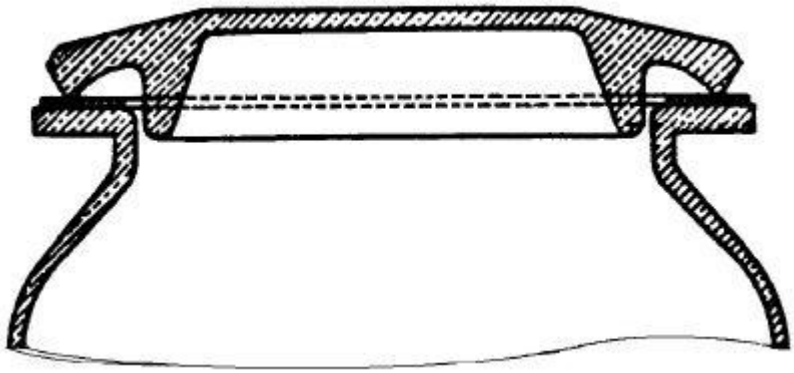

References relevant to classification in this group

This subclass/group does not cover:

By means of an additional element connected directly to the container	B65D 51/145

Informative references

Attention is drawn to the following places, which may be of interest for search:

Annular members	B65D 45/30
Lever-operated contractible or expansible band, the lever moving in the plane of the band	B65D 45/345

Disc closures	B65D 2543/00037

B65D 51/145

[N: by means of an additional element connected directly to the container]

Definition statement

This subclass/group covers:

Illustrative example of subject matter classified in this group:

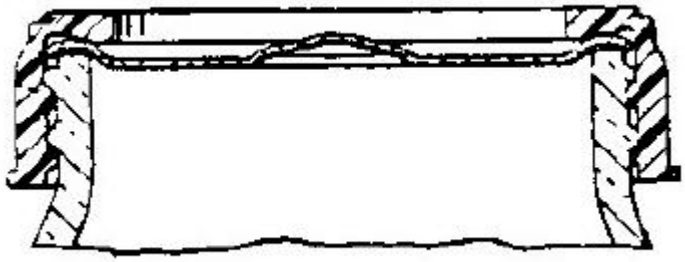

Informative references

Attention is drawn to the following places, which may be of interest for search:

Annular members	B65D 45/30
Lever-operated contractible or expansible band, the lever moving in the plane of the band	B65D 45/345

B65D 51/16

with means for venting air or gas

References relevant to classification in this group

This subclass/group does not cover:

Spouts with air inlet	B65D 25/40, B65D 47/06
Not included in a closure	B65D 33/00, B65D 77/225, B65D 81/20

E.g. closures for neutralising internal pressure variations	B65D 79/005
Milk churns with venting means	A01G
Feeding bottles with means for supplying air	A61J 9/04
Pumping means for creating a vacuum or superpressure	B65B 31/00
Wine fermentation closure	C12G
Venting devices for casks, barrels or the like	C12L 9/00
Venting means in general	B65D 2205/00

Informative references

Attention is drawn to the following places, which may be of interest for search:

With means for venting not comprising a valve	B65D 47/32

B65D 51/1611

[N: by means of an orifice, capillary or labyrinth passage (B65D 51/1616, B65D 51/1622 take precedence)]

Definition statement

This subclass/group covers:

Illustrative example of subject matter classified in this group:

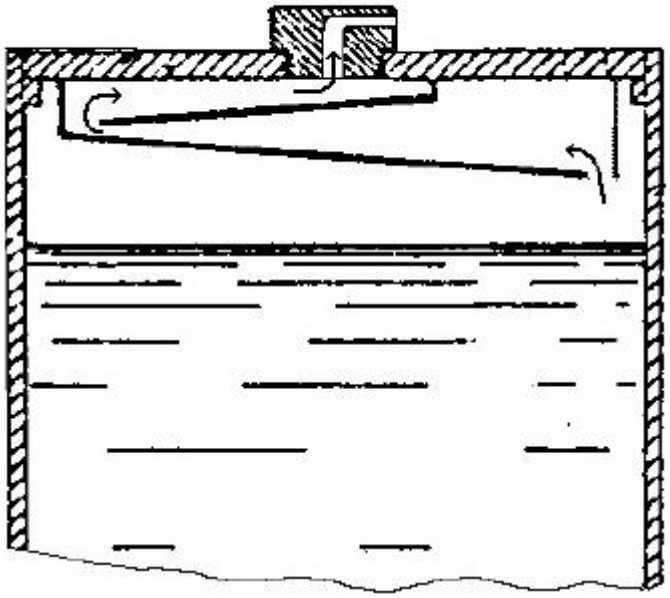

DE162516

References relevant to classification in this group

This subclass/group does not cover:

Venting air or gas by means of a filter	B65D 51/1616
Venting air or gas by means of a passage for the escape of gas between the closure and the lip of the container mouth	B65D 51/1622
Venting holes without details	B65D 2205/02

B65D 51/1616

[N: by means of a filter]

Definition statement

This subclass/group covers:

Illustrative example of subject matter classified in this group:

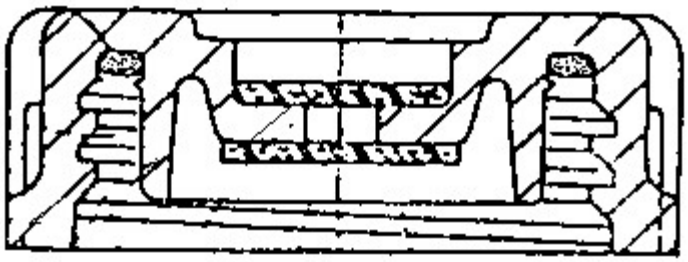

B65D 51/1622

[N: by means of a passage for the escape of gas between the closure and the lip of the container mouth]

Definition statement

This subclass/group covers:

Illustrative example of subject matter classified in this group:

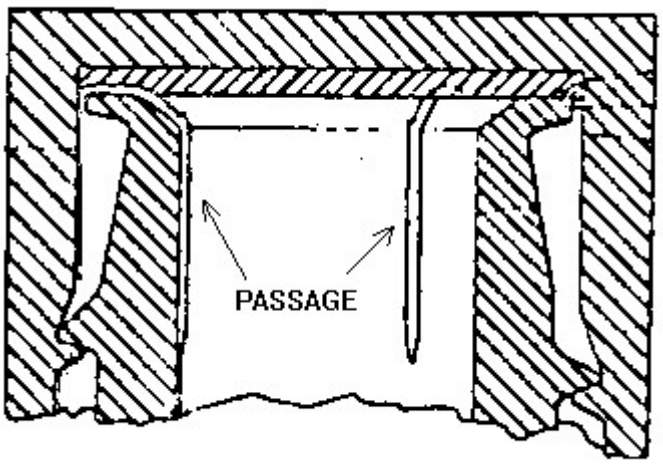

Informative references

Attention is drawn to the following places, which may be of interest for search:

Threaded or like caps or cap-like covers secured by rotation	B65D 41/04
By means of a passage for the escape of gas between the closure and the lip of the container mouth	B65D 51/1661
Venting occurring during initial closing or opening of the container, by means	B65D 51/1688

of a passage for the escape of gas between the closure and the lip of the container mouth, e.g. interrupted threads	

B65D 51/1627

[N: the closure being for a box-like container]

Definition statement

This subclass/group covers:

Illustrative example of subject matter classified in this group:

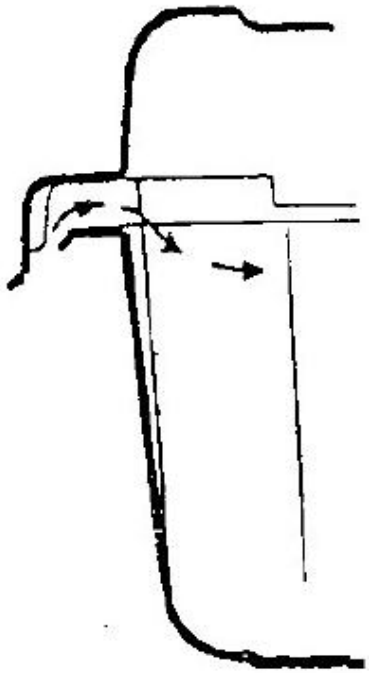

Informative references

Attention is drawn to the following places, which may be of interest for search:

The closure being for a box-like container	B65D 51/1666
The closure being for a box-like container	B65D 51/1694

B65D 51/1633

[N: whereby venting occurs by automatic opening of the closure, container or other element]

References relevant to classification in this group

This subclass/group does not cover:

Pressure relief valves	F16K 17/00

B65D 51/1638

[N: by means of an element bursting upon a predetermined pressure in the container being exceeded]

Definition statement

This subclass/group covers:

Illustrative example of subject matter classified in this group:

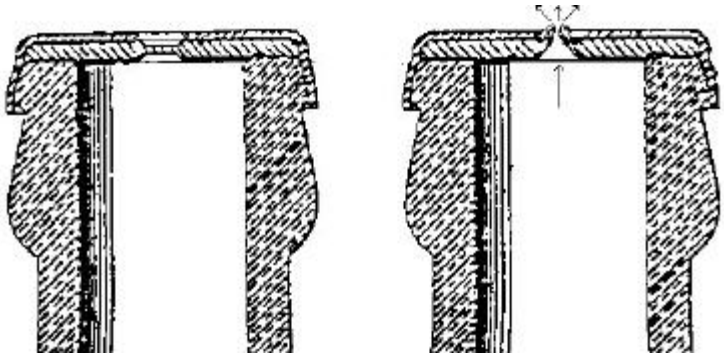

Informative references

Attention is drawn to the following places, which may be of interest for search:

Venting air or gas by rupturing a portion of the closure	B65D 51/1677

B65D 51/1644

[N: the element being a valve (B65D 51/1661 takes precedence)]

Definition statement

This subclass/group covers:

Illustrative example of subject matter classified in this group:

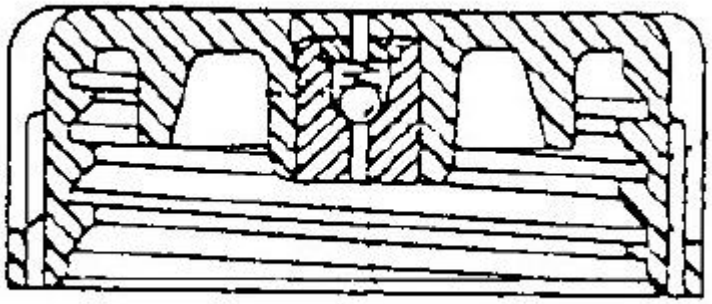

References relevant to classification in this group

This subclass/group does not cover:

Venting air or gas by means of a passage for the escape of gas between the closure and the lip of the container mouth	B65D 51/1661
For venting valves according	B65D 47/205
Pressure relief valves	F16K 17/00

Informative references

Attention is drawn to the following places, which may be of interest for search:

Hand-operated members for controlling dischargecomprising a valve or like element which is opened or closed by deformation of the container or closure	B65D 47/2018
The valve being formed by a tubular flexible sleeve surrounding a rod-like element provided with at least one radial passageway which is normally closed by the sleeve	B65D 47/205
Pressure relief-valves incorporated in a container wall, e.g. valves comprising at least one elastic element	B65D 77/225

B65D 51/165

[N: formed by a slit or narrow opening]

Definition statement

This subclass/group covers:
Illustrative example of subject matter classified in this group:

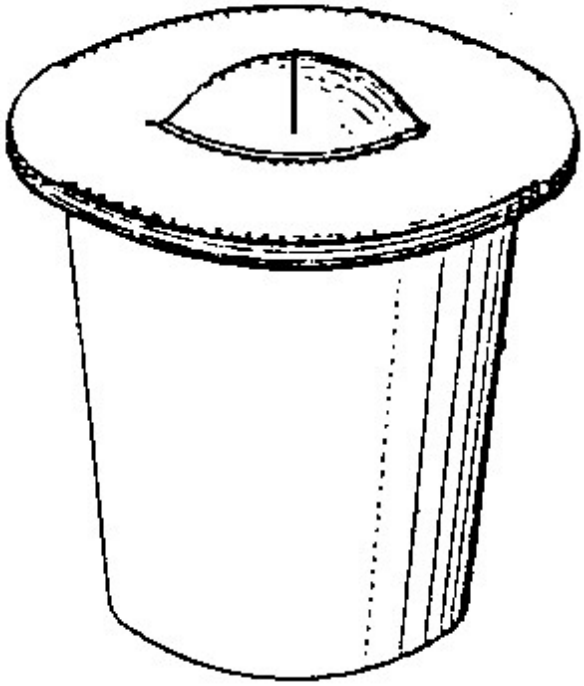

Informative references

Attention is drawn to the following places, which may be of interest for search:

The element being formed by a slit, narrow opening or constrictable spout, the size of the outlet passage being able to be varied by increasing or decreasing the pressure	B65D 47/2031

B65D 51/1655

[N: formed by an elastic band closing an opening in a tubular part of the closure encircled by said band]

Definition statement

This subclass/group covers:

Illustrative example of subject matter classified in this group:

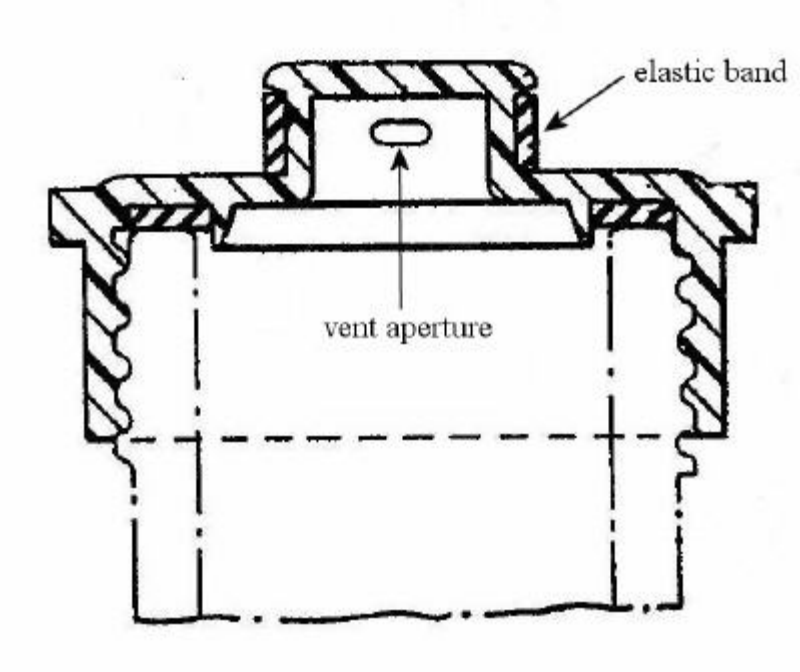

References relevant to classification in this group

This subclass/group does not cover:

Valves being formed by a tubular flexible sleeve surrounding a rod-like element	B65D 47/205

B65D 51/1661

[N: by means of a passage for the escape of gas between the closure and the lip of the container mouth]

Definition statement

This subclass/group covers:

Illustrative example of subject matter classified in this group:

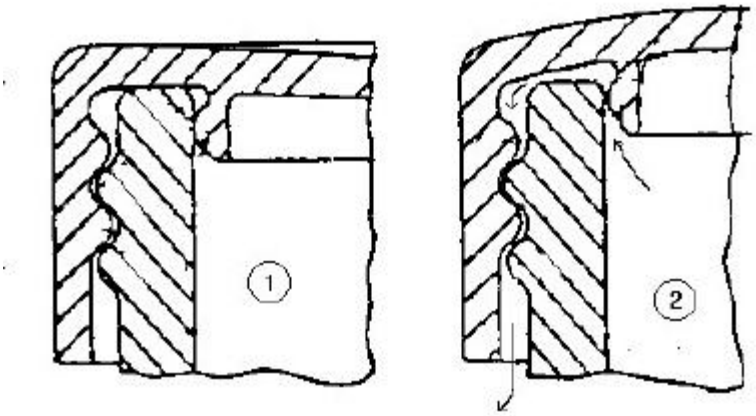

Informative references

Attention is drawn to the following places, which may be of interest for search:

Threaded or like caps or cap-like covers secured by rotation	B65D 41/04
Venting air or gas by means of a passage for the escape of gas between the closure and the lip of the container mouth	B65D 51/1622
Venting occurring during initial closing or opening of the container, by means of a passage for the escape of gas between the closure and the lip of the container mouth	B65D 51/1688

B65D 51/1666

[N: the closure being for a box-like container]

Definition statement

This subclass/group covers:

Illustrative example of subject matter classified in this group:

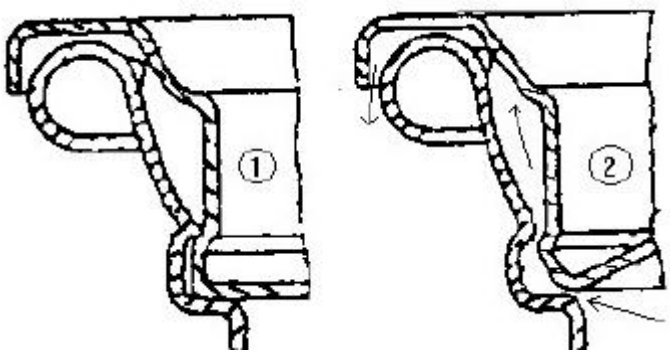

Informative references

Attention is drawn to the following places, which may be of interest for search:

Venting air or gas the closure being for a box-like container	B65D 51/1627
Venting occurring during initial closing or opening of the container, by means of a passage for the escape of gas between the closure and the lip of the container mouth, e.g. interrupted threads, the closure being for a box-like container	B65D 51/1694

B65D 51/1677

[N: by rupturing a portion of the closure]

Definition statement

This subclass/group covers:

Illustrative example of subject matter classified in this group:

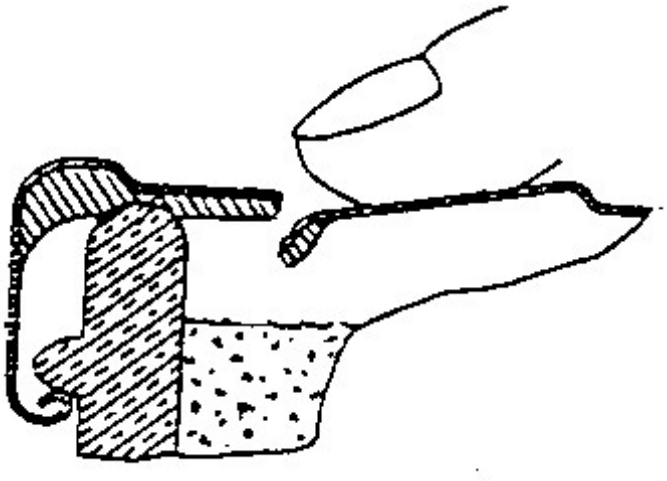

Informative references

Attention is drawn to the following places, which may be of interest for search:

Opening arrangements or devices for tearing along a line or from a point of weakness provided in an end wall	B65D 17/161
Attached can-cutting devices	B65D 17/18
Venting air or gas by means of an element bursting upon a predetermined pressure in the container being exceeded	B65D 51/1638

B65D 51/1683

[N: by actuating a separate element in the container or closure]

Definition statement

This subclass/group covers:

Illustrative example of subject matter classified in this group:

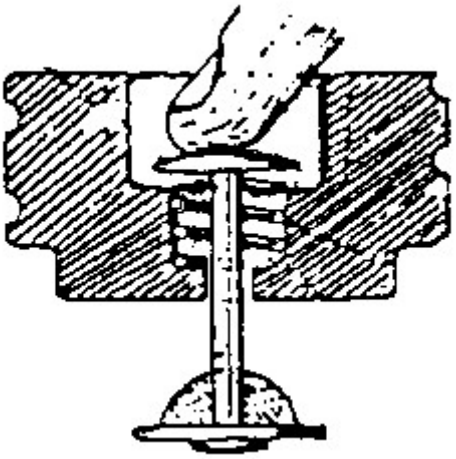

B65D 51/1688

[N: Venting occurring during initial closing or opening of the container, by means of a passage for the escape of gas between the closure and the lip of the container mouth, e.g. interrupted threads]

Definition statement

This subclass/group covers:

Illustrative example of subject matter classified in this group:

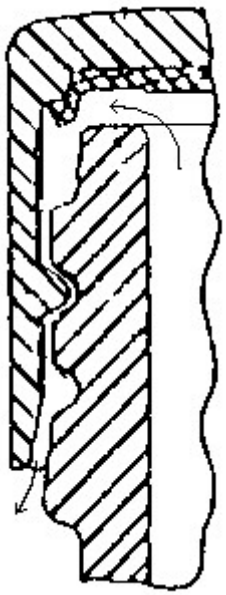

Informative references

Attention is drawn to the following places, which may be of interest for search:

Closures arranged within necks or pouring openings or in discharge apertures	B65D 39/00
Threaded or like caps or cap-like covers secured by rotation	B65D 41/04
Venting air or gas by means of a passage for the escape of gas between the closure and the lip of the container mouth	B65D 51/1622
Venting air or gas by means of a passage for the escape of gas between the closure and the lip of the container mouth	B65D 51/1661
Closures provided with freeze-drying means	B65D 51/241

B65D 51/1694

[N: the closure being for a box-like container]

Definition statement

This subclass/group covers:

Illustrative example of subject matter classified in this group:

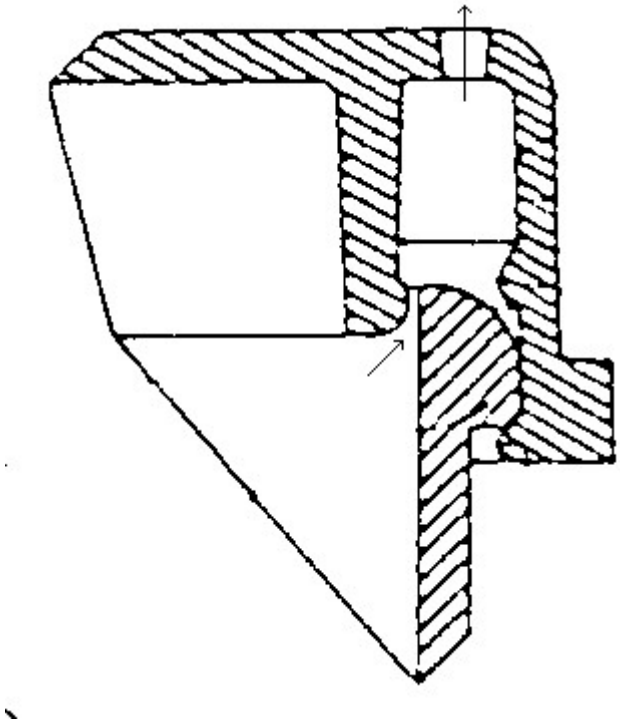

Informative references

Attention is drawn to the following places, which may be of interest for search:

Venting air or gas the closure being for a box-like container	B65D 51/1627
Venting air or gas by means of a passage for the escape of gas between the closure and the lip of the container mouth the closure being for a box-like container	B65D 51/1666

B65D 51/18

Arrangements of closures with protective outer cap-like covers or of two or more co-operating closures (secondary protective cap-like outer covers for caps B65D 41/62; [N: B65D 51/247 takes precedence])

Definition statement

This subclass/group covers:

Illustrative example of subject matter classified in this group:

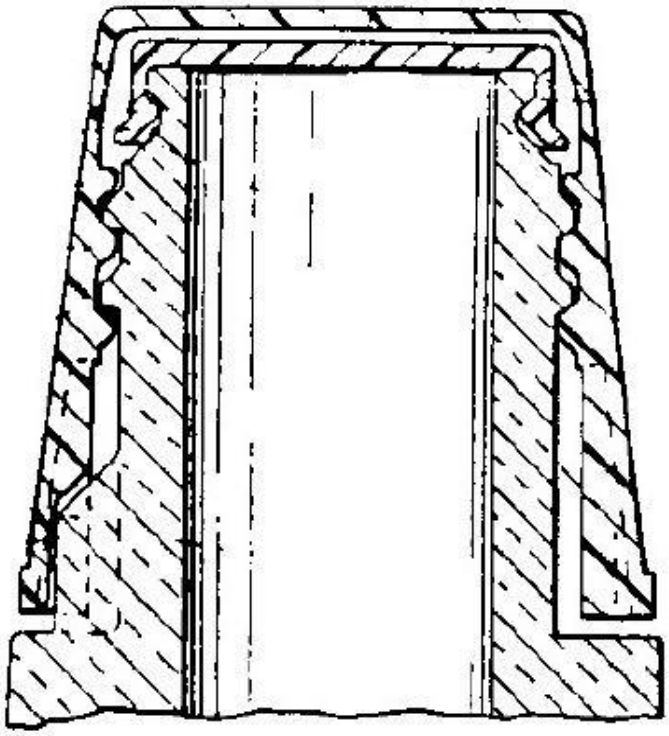

US4280631

References relevant to classification in this group

This subclass/group does not cover:

Bags	B65D 31/005
The closure comprising nested inner and outer caps or an inner cap and an outer coaxial annular member, which can be brought into engagement to enable removal by rotation	B65D 50/041
Closures combined with auxiliary devices for non-closing purposes, provided with eating utensils or spatulas, located between an inner and an outer closure	B65D 51/247

Informative references

Attention is drawn to the following places, which may be of interest for search:

Caps combined with stoppers	B65D 41/28

Caps or cap-like covers combined with stoppers	B65D 41/58

Special rules of classification within this group

The use of available Indexing Codes is mandatory.

B65D 51/185

[N: the outer closure being a foil membrane]

Definition statement

This subclass/group covers:
Illustrative example of subject matter classified in this group:

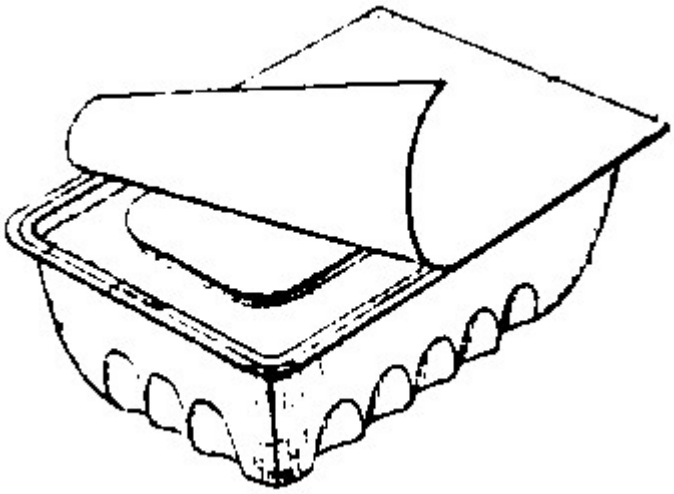

Special rules of classification within this group

The use of available Indexing Codes is mandatory.

B65D 51/20

Caps, lids, or covers co-operating with an inner closure arranged to be opened by piercing, cutting, or tearing [N: (B65D 51/185 takes precedence; co-operating with an auxiliary container for additional articles or materials B65D 51/28)]

Definition statement

This subclass/group covers:

Illustrative example of subject matter classified in this group:

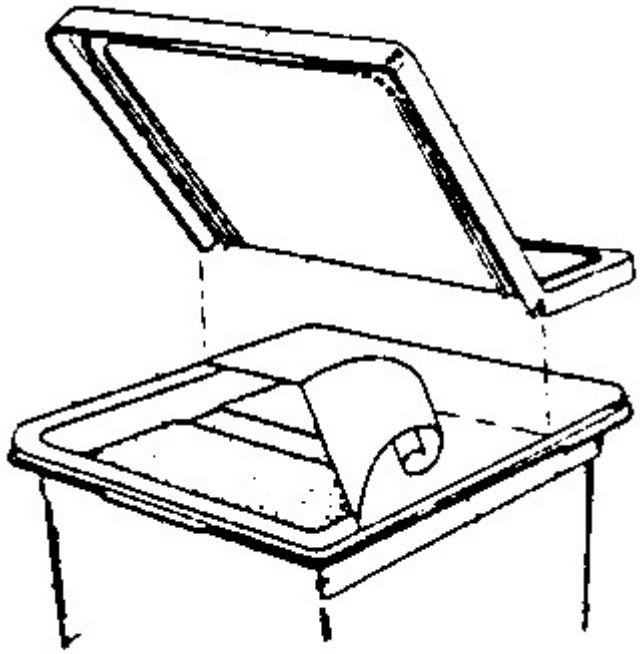

References relevant to classification in this group

This subclass/group does not cover:

For reclosing open cans, tins	B65D 51/007
Arrangements of closures with protective outer cap-like covers or of two or more co-operating closures the outer closure being a foil membrane	B65D 51/185

Special rules of classification within this group

The use of available Indexing Codes is mandatory.

B65D 51/22

having means for piercing, cutting, or tearing the inner closure

References relevant to classification in this group

This subclass/group does not cover:

Piercing or tearing independent from	B65D 51/20

the cap	
Closures also fullfilling the function of a container	B65D 51/2807

Informative references

Attention is drawn to the following places, which may be of interest for search:

Spouts with means for piercing or cutting the container wall or a membrane connected to said wall	B65D 5/747
Closures with devices for removing frangible parts of the pouring element or of its closure	B65D 47/106
Closures with frangible parts adapted to be pierced, torn, or removed, to provide discharge openings	B65D 47/36

Special rules of classification within this group

The use of available Indexing Codes is mandatory.

B65D 51/221

[N: a major part of the inner closure being left inside the container after the opening]

Informative references

Attention is drawn to the following places, which may be of interest for search:

Opening arrangements or devices for tearing along a line or from a point of weakness provided in an end wall	B65D 17/161
Attached can-cutting devices	B65D 17/18

Special rules of classification within this group

The use of available Indexing Codes is mandatory.

B65D 51/222

[N: the piercing or cutting means being integral with, or fixedly attached to, the outer closure]

Definition statement

This subclass/group covers:

Illustrative example of subject matter classified in this group:

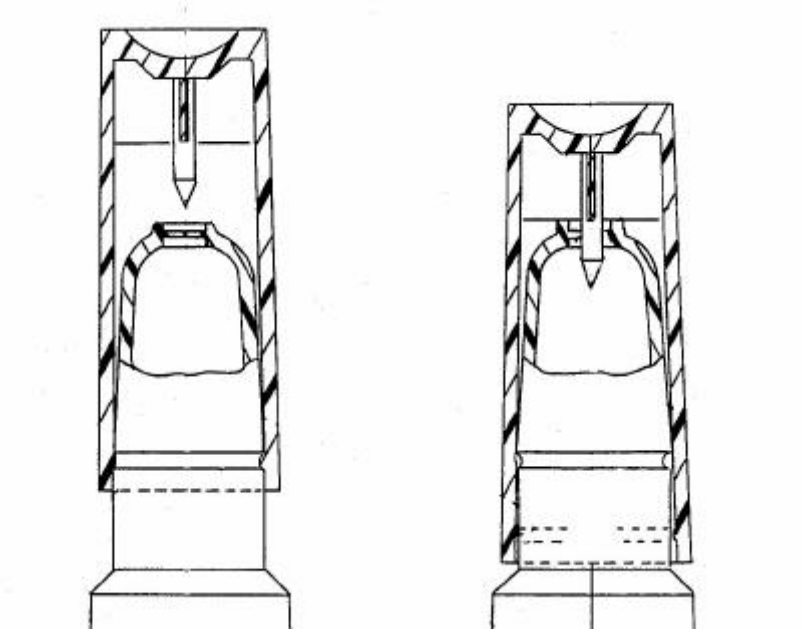

Special rules of classification within this group

The use of available Indexing Codes is mandatory.

B65D 51/223

[N: the outer closure having to be removed or inverted for piercing or cutting]

Definition statement

This subclass/group covers:

Illustrative example of subject matter classified in this group:

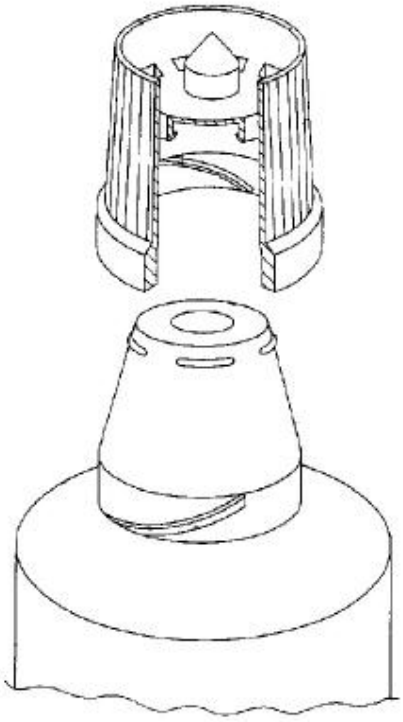

Special rules of classification within this group

The use of available Indexing Codes is mandatory.

B65D 51/224

[N: the outer closure comprising flexible parts (B65D 51/223 takes precedence)]

Definition statement

This subclass/group covers:

Illustrative example of subject matter classified in this group:

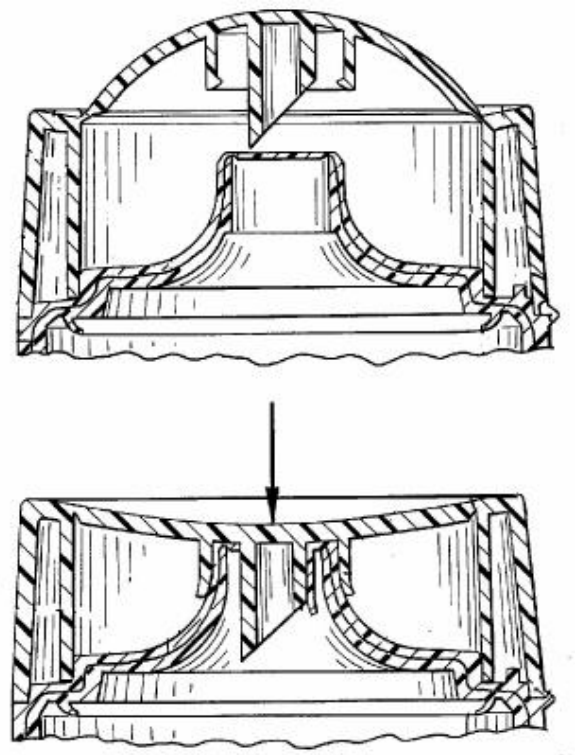

References relevant to classification in this group

This subclass/group does not cover:

Caps, lids, or covers co-operating with an inner closure arranged to be opened by piercing, cutting, or tearing, the outer closure having to be removed or inverted for piercing or cutting	B65D 51/223

Special rules of classification within this group

The use of available Indexing Codes is mandatory.

B65D 51/225

[N: and further comprising a device first inhibiting displacement of the outer closure (B65D 51/223 takes precedence)]

Definition statement

This subclass/group covers:

Illustrative example of subject matter classified in this group:

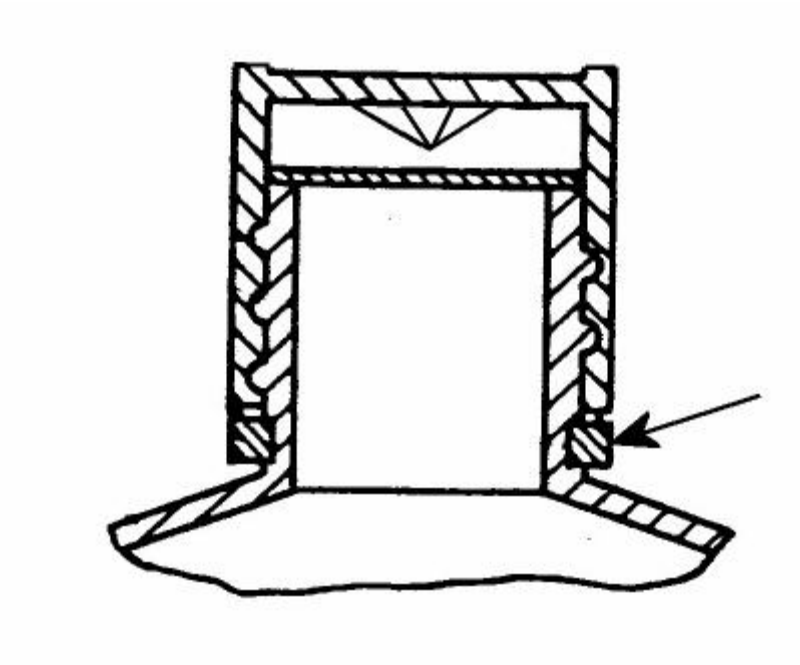

References relevant to classification in this group

This subclass/group does not cover:

Caps, lids, or covers co-operating with an inner closure arranged to be opened by piercing, cutting, or tearing, the outer closure having to be removed or inverted for piercing or cutting	B65D 51/223

Special rules of classification within this group

The use of available Indexing Codes is mandatory.

B65D 51/227

[N: and further comprising a device first inhibiting displacement of the piercing or cutting means]

Definition statement

This subclass/group covers:

Illustrative example of subject matter classified in this group:

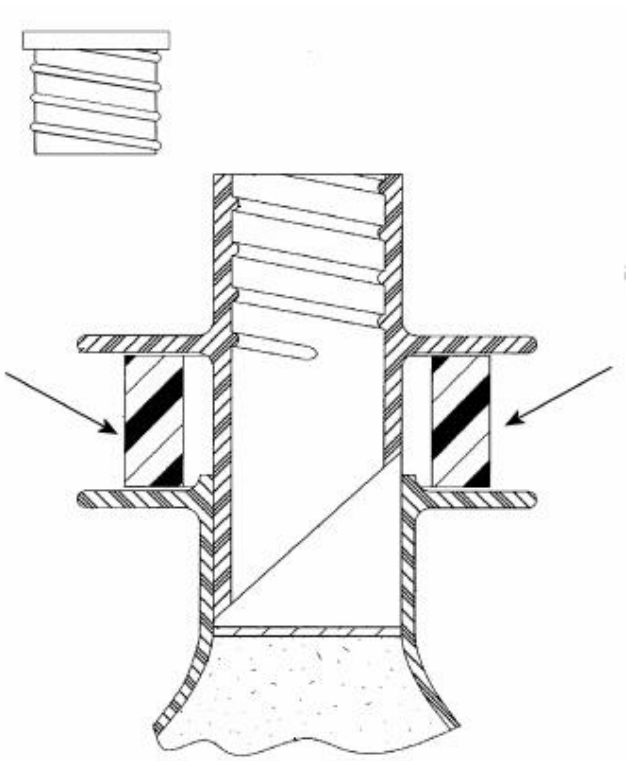

Special rules of classification within this group

The use of available Indexing Codes is mandatory.

B65D 51/228

[N: a major part of the inner closure being removed from the container after the opening]

Definition statement

This subclass/group covers:

Illustrative example of subject matter classified in this group:

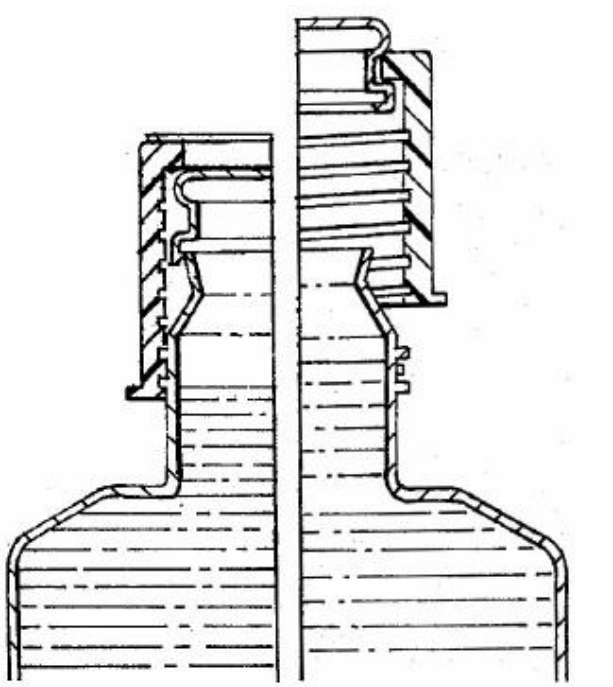

Special rules of classification within this group

The use of available Indexing Codes is mandatory.

B65D 51/24

combined [N: or co-operating] with auxiliary devices for non-closing purposes

References relevant to classification in this group

This subclass/group does not cover:

Containers with a closure presenting stacking elements	B65D 21/0217
Closure openers	B65D 51/243
Advertising	B65D 51/245
Oxygen absorbers	B65D 51/244
Utensils for removing the contents from the package, e.g. spoons, forks, spatulas	B65D 51/246, B65D 77/245
Spoon-shaped dispensing spouts	B65D 77/245

Closures neutralising pressure variations	B65D 79/005
Closures acting as pill dispensers	B65D 83/049
Spoon-shaped dispensing spouts for administering medicine see also	A61J 7/0015
Measuring spoons	G01F

Informative references

Attention is drawn to the following places, which may be of interest for search:

Closures having pressurising means, i.e. increasing internal pressure	B65D 81/2053, B65B 31/00, B65B 31/046

B65D 51/241

[N: provided with freeze-drying means]

Definition statement

This subclass/group covers:

Illustrative example of subject matter classified in this group:

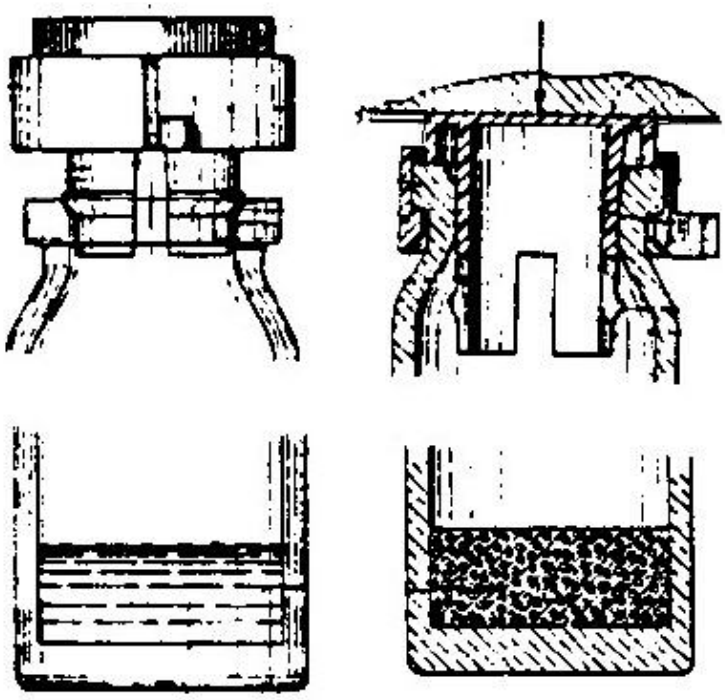

Informative references

Attention is drawn to the following places, which may be of interest for search:

Closures arranged within necks or pouring openings or in discharge apertures	B65D 39/00

B65D 51/242

[N: provided with means for facilitating lifting or suspending of the container]

Definition statement

This subclass/group covers:

Illustrative example of subject matter classified in this group:

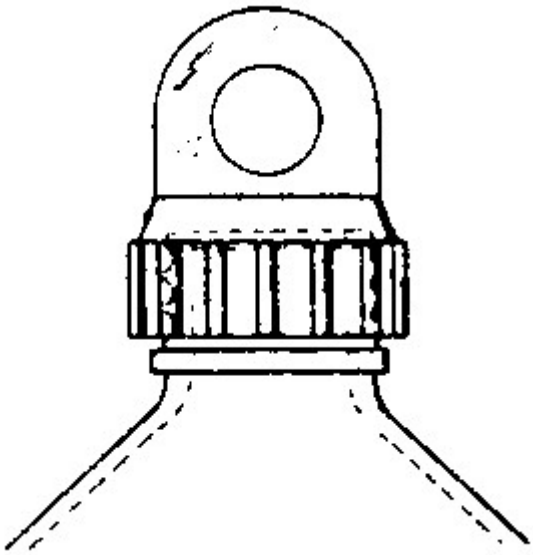

B65D 51/243

[N: combined with an opening device (B65D 51/22 takes precedence)]

Definition statement

This subclass/group covers:

Illustrative example of subject matter classified in this group:

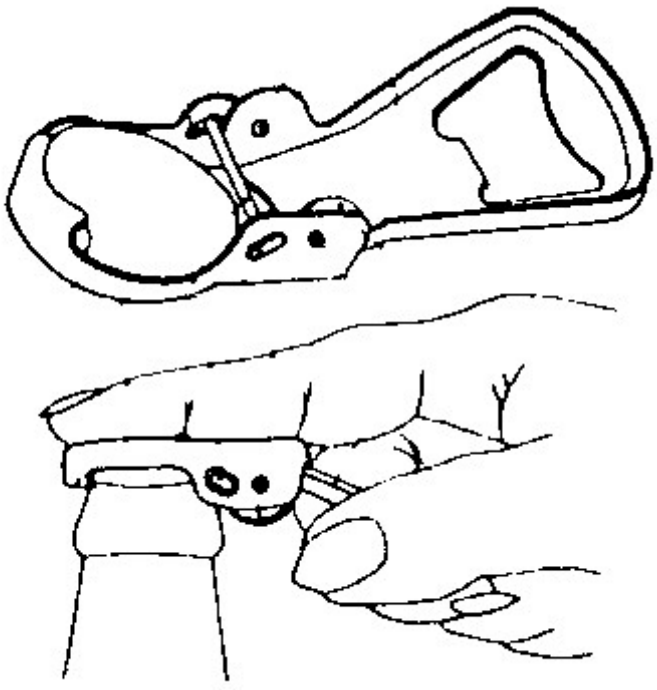

References relevant to classification in this group

This subclass/group does not cover:

Threaded caps with means specially adapted for facilitating the operation of opening or closing	B65D 41/0485
Caps, lids, or covers co-operating with an inner closure having means for piercing, cutting, or tearing the inner closure	B65D 51/22

B65D 51/245

[N: provided with decoration, information or contents indicating devices, labels (B65D 81/366 takes precedence)]

Definition statement

This subclass/group covers:

Illustrative example of subject matter classified in this group:

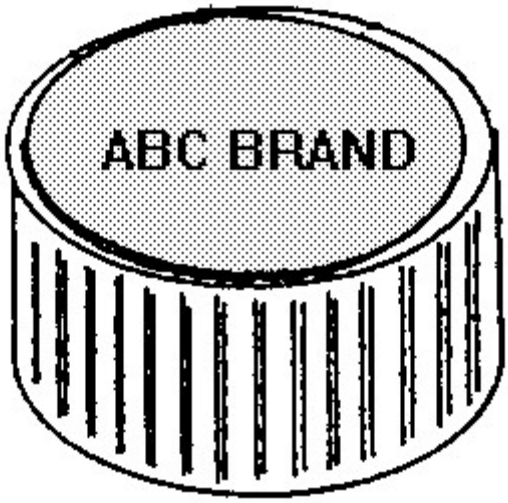

References relevant to classification in this group

This subclass/group does not cover:

The container closure only being provided with a three dimensional figure, e.g. chess piece, animal	B65D 81/366

Informative references

Attention is drawn to the following places, which may be of interest for search:

Means for the attachment of tags	B65D 23/14
Means for the attachment of labels, cards, coupons or the like	B65D 25/205
Cards, coupons, or other inserts or accessories	B65D 75/54

B65D 51/246

[N: provided with eating utensils or spatulas (applicator rods or brushes B65D 51/32)]

Definition statement

This subclass/group covers:

Illustrative example of subject matter classified in this group:

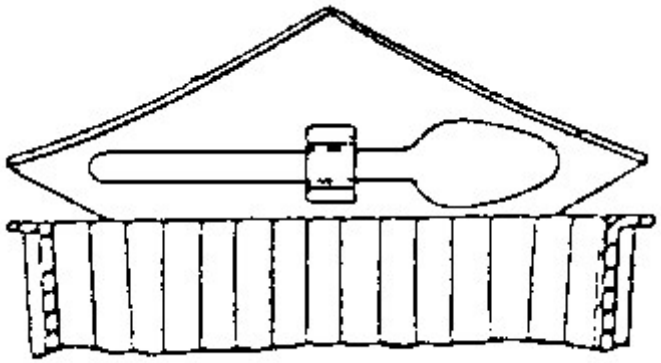

Informative references

Attention is drawn to the following places, which may be of interest for search:

Containers for delivering jam, mustard, or the like, combined with a spreading implement	A47G 19/186
Utensils for removing the contents from the package	B65D 77/245

B65D 51/247

[N: located between an inner and an outer closure]

Definition statement

This subclass/group covers:
Illustrative example of subject matter classified in this group:

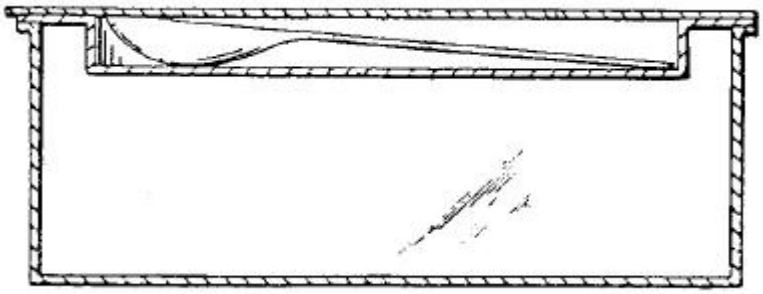

Informative references

Attention is drawn to the following places, which may be of interest for search:

Arrangements of closures with protective outer cap-like covers or of two or more co-operating closures, the outer closure being a foil membrane	B65D 51/185
Closures with auxiliary containers for additional articles or materials	B65D 51/28
Rigid containers disposed one within the other	B65D 81/3216

B65D 51/248

[N: the closure being provided with transient audible or visual signaling means, e.g. for indicating dispensing, or other illuminating or acoustic devices, e.g. whistles (B65D 55/026, B65D 55/028 take precedence; for indicating incorrect storage B65D 79/02)]

Definition statement

This subclass/group covers:

Illustrative example of subject matter classified in this group:

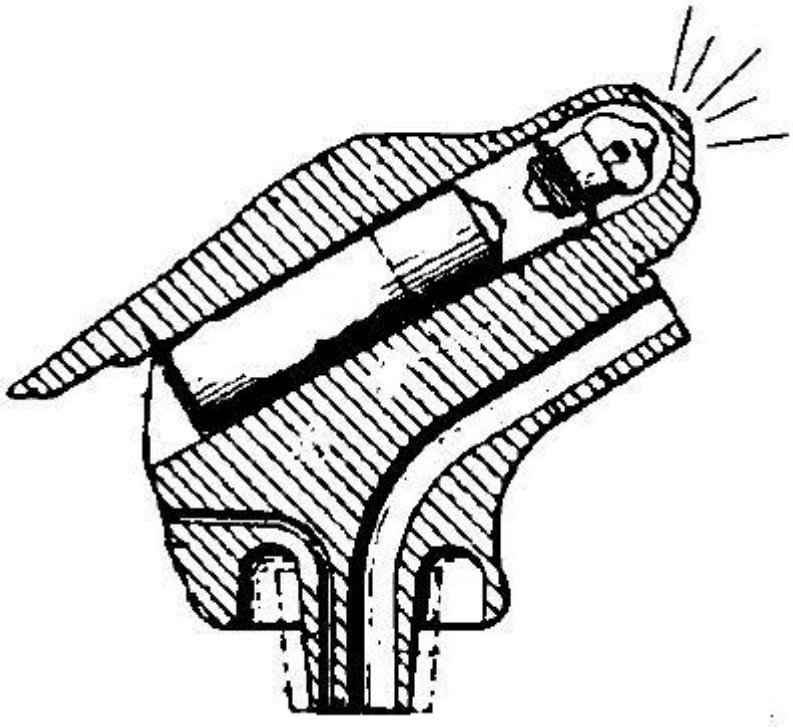

References relevant to classification in this group

This subclass/group does not cover:

Initial opening or unauthorised access being indicated by a visual change using indicators other than tearable means	B65D 55/026
Initial opening or unauthorised access being indicated by the presence or absence of an audible or electrical signal	B65D 55/028

Informative references

Attention is drawn to the following places, which may be of interest for search:

For indicating incorrect storage	B65D 79/02
Containers provided with an acoustic device, e.g. for indicating opening of the package	B65D 5/4291
Initial opening or unauthorised access	B65D 55/028

being indicated by the presence or absence of an audible or electrical signal	

B65D 51/249

[N: the closure being specifically formed for supporting the container]

Definition statement

This subclass/group covers:

Illustrative example of subject matter classified in this group:

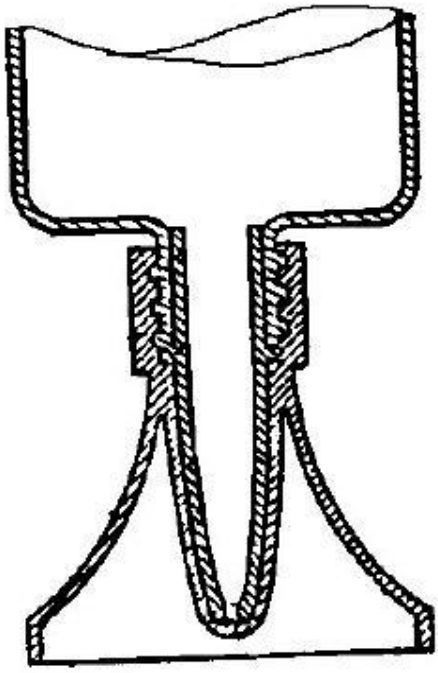

Informative references

Attention is drawn to the following places, which may be of interest for search:

Supporting means fixed to the container	B65D 23/001
Pliable tubular containers adapted to be permanently, deformed to expel contentswith auxiliary devices, for applying contents to surfaces	B65D 35/36

B65D 51/26

with means for keeping contents in position, e.g. resilient means

Definition statement

This subclass/group covers:

Illustrative example of subject matter classified in this group:

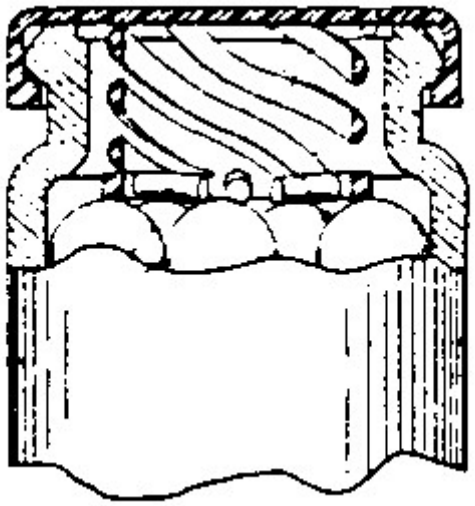

References relevant to classification in this group

This subclass/group does not cover:

For keeping contents immersed in liquids	B65D 81/22

B65D 51/28

with auxiliary containers for additional articles or materials [N: (B65D 51/247 takes precedence)]

Definition statement

This subclass/group covers:

Illustrative example of subject matter classified in this group:

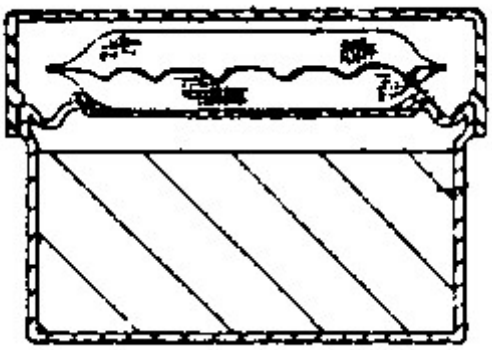

References relevant to classification in this group

This subclass/group does not cover:

Closures located between an inner and an outer closure	B65D 51/247

Informative references

Attention is drawn to the following places, which may be of interest for search:

Caps or cap-like covers without lines of weakness serving as, or incorporating, drinking or measuring vessels	B65D 41/26
Caps or cap-like covers with lines of weakness serving as, or incorporating, drinking or measuring vessels	B65D 41/56
Rigid containers disposed one within the other	B65D 81/3216

B65D 51/2807

[N: the closure presenting means for placing the additional articles or materials in contact with the main contents by acting on a part of the closure without removing the closure, e.g. by pushing down, pulling up, rotating or turning a part of the closure, or upon initial opening of the container]

Informative references

Attention is drawn to the following places, which may be of interest for search:

Pliable tubular containers adapted to be permanently deformed to expel contents for mixing or discharging of two or more components	B65D 35/242
Separate rigid or semi-rigid containers joined to each other at their external surfaces	B65D 81/3205
Rigid containers disposed one within the otherwith additional means facilitating admixture	B65D 81/3222

B65D 51/2814

[N: the additional article or materials being released by piercing, cutting or tearing an element enclosing it]

Informative references

Attention is drawn to the following places, which may be of interest for search:

Separate rigid or semi-rigid containers joined to each other at their external surfaces	B65D 81/3205

B65D 51/2821

[N: said element being a blister, a capsule or like sealed container]

Definition statement

This subclass/group covers:

Illustrative example of subject matter classified in this group:

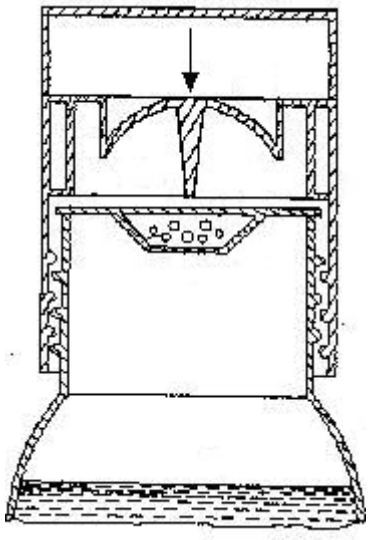

References relevant to classification in this group

This subclass/group does not cover:

Details of blisters	B65D 75/32, B65D 2575/32, B65D 2575/36

Informative references

Attention is drawn to the following places, which may be of interest for search:

Separate rigid or semi-rigid containers joined to each other at their external surfaces	B65D 81/3205

B65D 51/2828

[N: said element being a film or a foil (B65D 51/2821, B65D 51/2842 take precedence)]

Definition statement

This subclass/group covers:

Illustrative example of subject matter classified in this group:

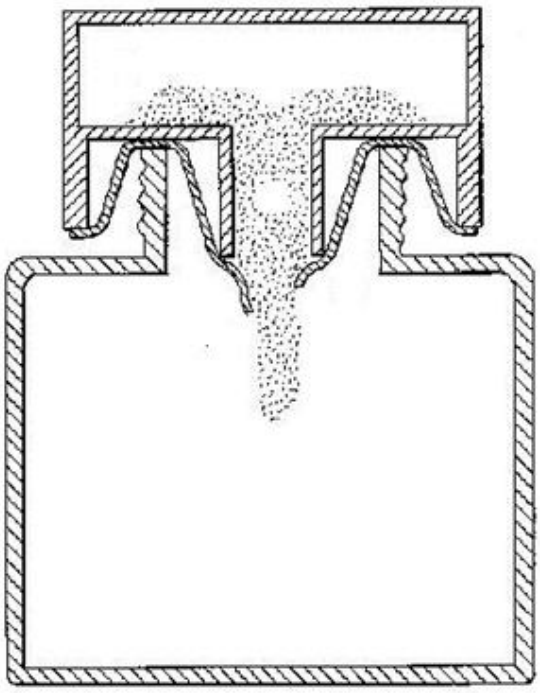

References relevant to classification in this group

This subclass/group does not cover:

The additional article or materials being released by piercing, cutting or tearing an element enclosing it, said element being a blister, a capsule or like sealed container	B65D 51/2821
The additional article or materials being released by piercing, cutting or tearing an element enclosing it, said element being provided with a preformed weakened line	B65D 51/2842

Informative references

Attention is drawn to the following places, which may be of interest for search:

Separate rigid or semi-rigid containers joined to each other at their external surfaces	B65D 81/3205

B65D 51/2835

[N: ruptured by a sharp element, e.g. a cutter or a piercer]

Definition statement

This subclass/group covers:
Illustrative example of subject matter classified in this group:

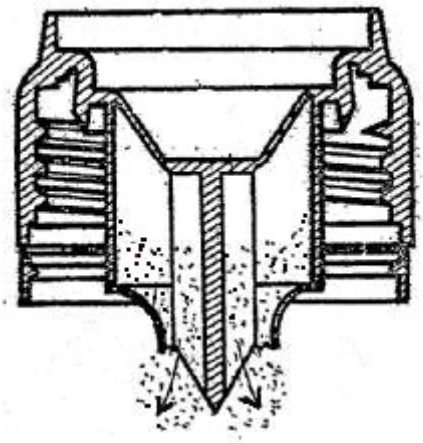

Informative references

Attention is drawn to the following places, which may be of interest for search:

Separate rigid or semi-rigid containers joined to each other at their external surfaces	B65D 81/3205

B65D 51/2842

[N: said element being provided with a preformed weakened line (B65D 51/2821 takes precedence)]

Definition statement

This subclass/group covers:
Illustrative example of subject matter classified in this group:

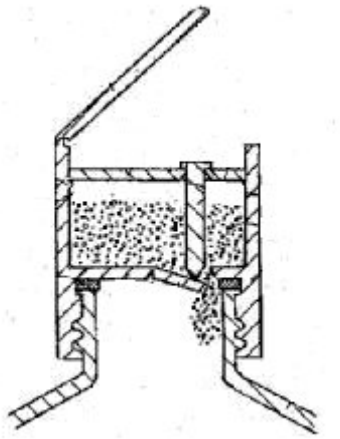

References relevant to classification in this group

This subclass/group does not cover:

The additional article or materials being released by piercing, cutting or tearing an element enclosing it, said element being a blister, a capsule or like sealed container	B65D 51/2821

Informative references

Attention is drawn to the following places, which may be of interest for search:

Separate rigid or semi-rigid containers joined to each other at their external surfaces	B65D 81/3205

B65D 51/285

[N: ruptured by a sharp element, e.g. a cutter or a piercer]

Definition statement

This subclass/group covers:

Illustrative example of subject matter classified in this group:

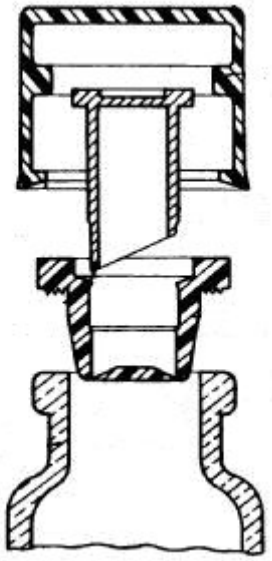

Informative references

Attention is drawn to the following places, which may be of interest for search:

Separate rigid or semi-rigid containers joined to each other at their external surfaces	B65D 81/3205

B65D 51/2857

[N: the additional article or materials being released by displacing or removing an element enclosing it (B65D 51/2814 takes precedence)]

References relevant to classification in this group

This subclass/group does not cover:

The additional article or materials being released by piercing, cutting or tearing an element enclosing it	B65D 51/2814

Informative references

Attention is drawn to the following places, which may be of interest for search:

Separate rigid or semi-rigid containers joined to each other at their external surfaces	B65D 81/3205

B65D 51/2864

[N: the element being a plug or like element closing a passage between the auxiliary container and the main container]

Definition statement

This subclass/group covers:

Illustrative example of subject matter classified in this group:

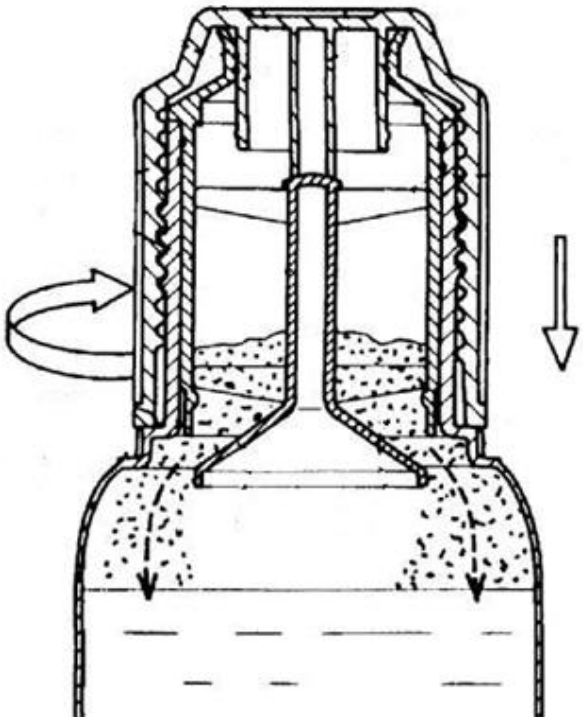

Informative references

Attention is drawn to the following places, which may be of interest for search:

The partition being in the form of a plug or the like which can be raised off its seat by means of a pull cord or the like	B65D 25/087
Separate rigid or semi-rigid containers joined to each other at their external surfaces	B65D 81/3205

B65D 51/2871

[N: the plug falling into the main container]

Definition statement

This subclass/group covers:
Illustrative example of subject matter classified in this group:

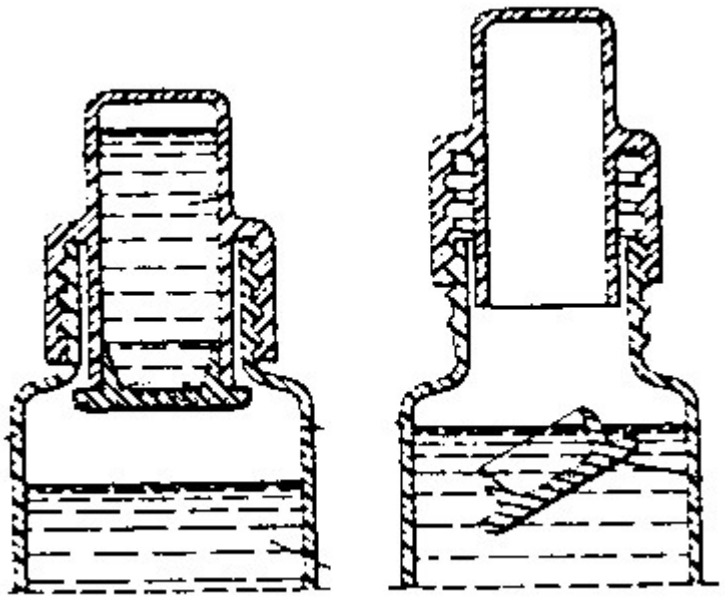

Informative references

Attention is drawn to the following places, which may be of interest for search:

The partition being in the form of a plug or the like which is removed by increasing or decreasing the pressure within the container	B65D 25/082
The partition being in the form of a plug or the like which is dislodged by means of a plunger rod or the like pushing the plug down	B65D 25/085
Separate rigid or semi-rigid containers joined to each other at their external surfaces	B65D 81/3205

B65D 51/2878

[N: the element being a lid or cover seated on a passage between the auxiliary container and the main container]

Definition statement

This subclass/group covers:

Illustrative example of subject matter classified in this group:

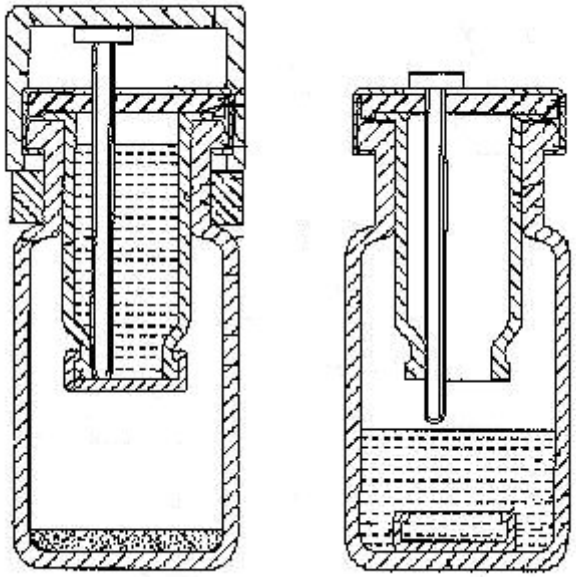

Informative references

Attention is drawn to the following places, which may be of interest for search:

Partitions with provisions for removing or destroying	B65D 25/08
Separate rigid or semi-rigid containers joined to each other at their external surfaces	B65D 81/3205

B65D 51/2885

[N: the element being the auxiliary container falling into the main container; the additional article or materials in solid block form falling into the main container]

Definition statement

This subclass/group covers:

Illustrative example of subject matter classified in this group:

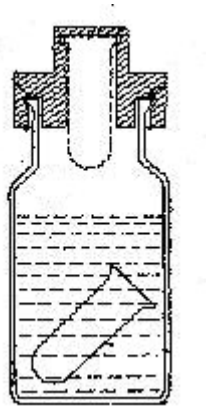

Informative references

Attention is drawn to the following places, which may be of interest for search:

Partitions with provisions for removing or destroying	B65D 25/08
Separate rigid or semi-rigid containers joined to each other at their external surfaces	B65D 81/3205

B65D 51/2892

[N: the element, e.g. a valve, opening an aperture of the auxiliary container (B65D 51/2864, B65D 51/2878 take precedence)]

Definition statement

This subclass/group covers:

Illustrative example of subject matter classified in this group:

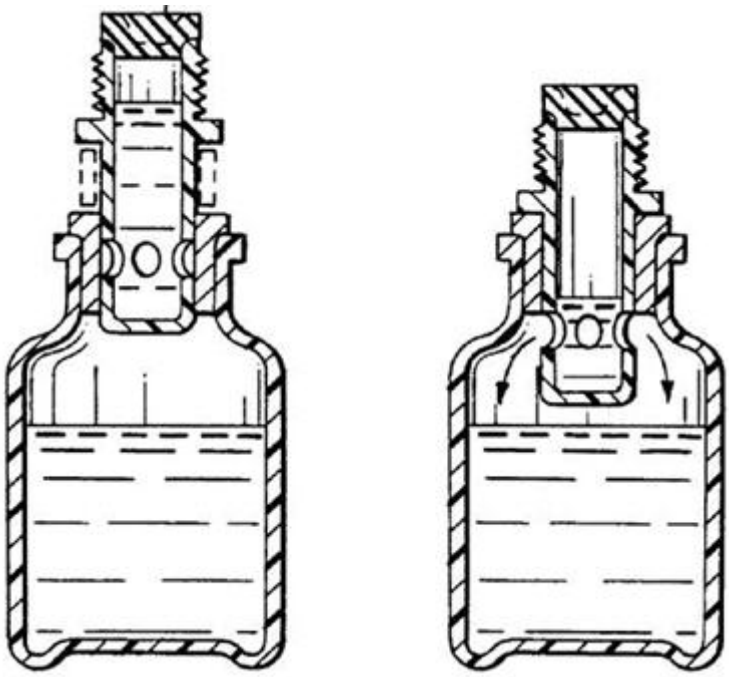

References relevant to classification in this group

This subclass/group does not cover:

The additional article or materials being released by displacing or removing an element enclosing it,the element being a plug or like element closing a passage between the auxiliary container and the main container	B65D 51/2864
The additional article or materials being released by displacing or removing an element enclosing it,the element being a lid or cover seated on a passage between the auxiliary container and the main container	B65D 51/2878

Informative references

Attention is drawn to the following places, which may be of interest for search:

Separate rigid or semi-rigid containers joined to each other at their external surfaces	B65D 81/3205

B65D 51/30

for desiccators

Definition statement

This subclass/group covers:
Illustrative example of subject matter classified in this group:

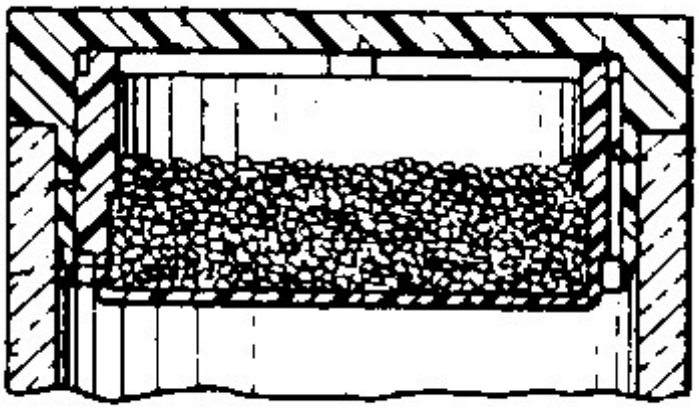

B65D 51/32

with brushes or rods for applying or stirring contents (droppers B65D 47/18; [N: eating utensils or spatulas B65D 51/246])

Definition statement

This subclass/group covers:
Illustrative example of subject matter classified in this group:

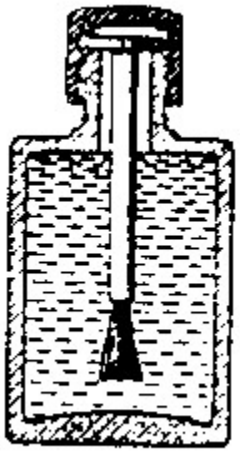

References relevant to classification in this group

This subclass/group does not cover:

Brushes located on exterior of container which do not have to be removed from the container to apply the contents	B65D 47/42
Mixers	B65D 83/00

Informative references

Attention is drawn to the following places, which may be of interest for search:

Appliances specially adapted for applying liquid using a brush or the like	A45D 34/042
Appliances specially adapted for applying pasty paint using a brush or the like	A45D 40/262
Erasers, rubbers, or erasing devices with fluids	B43L 19/0018
Hand-held devices	B43M 11/06

B65D 53/00

Sealing or packing elements (sealings in general F16J 15/00); Sealings formed by liquid or plastics material

References relevant to classification in this group

This subclass/group does not cover:

Materials in mouldable or extrudable form for sealing or packing joints or covers	C09K 3/10

Informative references

Attention is drawn to the following places, which may be of interest for search:

Sealings in general	F16J 15/00

B65D 53/02

Collars or rings

Definition statement

This subclass/group covers:

Illustrative example of subject matter classified in this group:

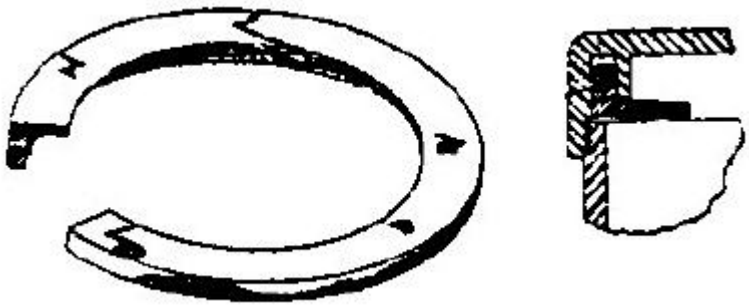

B65D 53/04

Discs

Definition statement

This subclass/group covers:

Illustrative example of subject matter classified in this group:

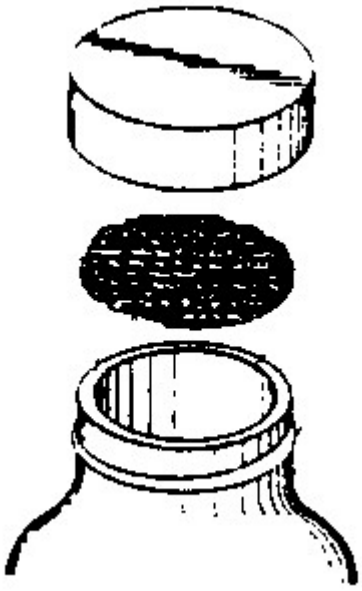

Informative references

Attention is drawn to the following places, which may be of interest for search:

Threaded or like caps or cap-like covers secured by rotation with separate sealing elements, discs	B65D 41/045

B65D 53/06

Sealings formed by liquid or plastic material

Definition statement

This subclass/group covers:

Illustrative example of subject matter classified in this group:

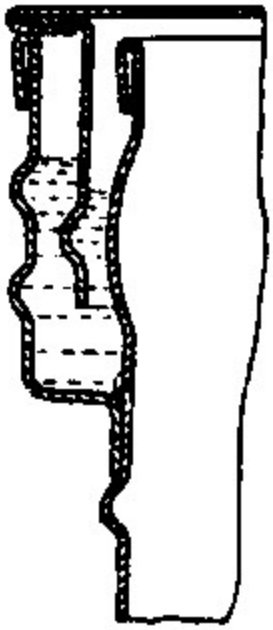

B65D 53/08

Flexible adhesive strips adapted to seal filling or discharging apertures

Definition statement

This subclass/group covers:

Illustrative example of subject matter classified in this group:

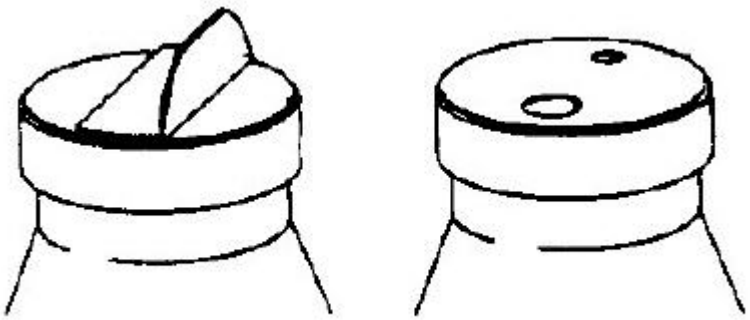

Informative references

Attention is drawn to the following places, which may be of interest for search:

Flexible tape or foil-like material	B65D 17/501
Deformable or tearable wires, strings, or strips	B65D 55/06

B65D 55/02

Locking devices; Means for discouraging or indicating unauthorised opening or removal of closure (protective covers for bottles B65D 23/08; [N: B65D 41/32 takes precedence]; protective cap-like outer covers for bottle or jar closures B65D 41/28; pressure-applying means B65D 45/00])

References relevant to classification in this group

This subclass/group does not cover:

Caps or cap-like covers with lines of weakness, tearing-strips, tags, or like opening or removal devices	B65D 41/32

Special rules of classification within this group

The use of available Indexing Codes is mandatory.

B65D 55/022

[N: with ratchet effect between relatively rotating parts (B65D 41/3404, B65D 50/04 take precedence)]

Definition statement

This subclass/group covers:

Illustrative example of subject matter classified in this group:

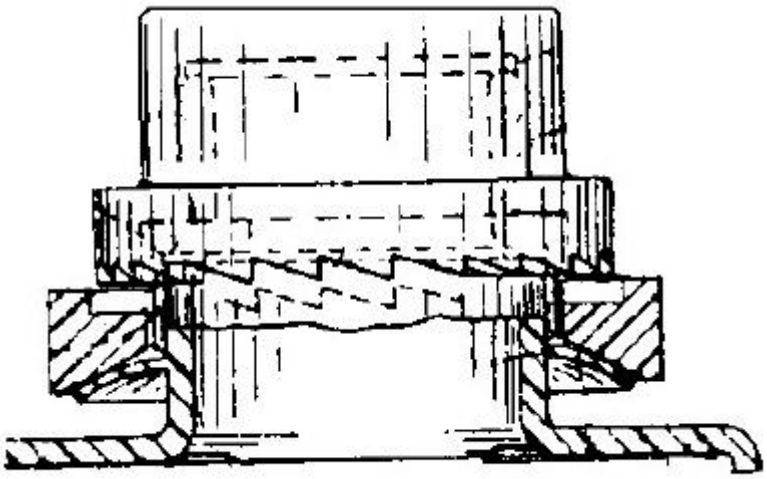

References relevant to classification in this group

This subclass/group does not cover:

Threaded or like caps or cap-like covers with ratchet-and-pawl mechanism between the container and the closure skirt or the tamper element	B65D 41/3404
Closures with means for discouraging unauthorised opening or removal thereof, with or without indicating means requiring the combination of simultaneous actions	B65D 50/04

Special rules of classification within this group

The use of available Indexing Codes is mandatory.

B65D 55/024

[N: Closures in which a part has to be ruptured to gain access to the contents (B65D 41/32, B65D 43/0235, B65D 55/022, B65D 55/06 take precedence)]

Definition statement

This subclass/group covers:

Illustrative example of subject matter classified in this group:

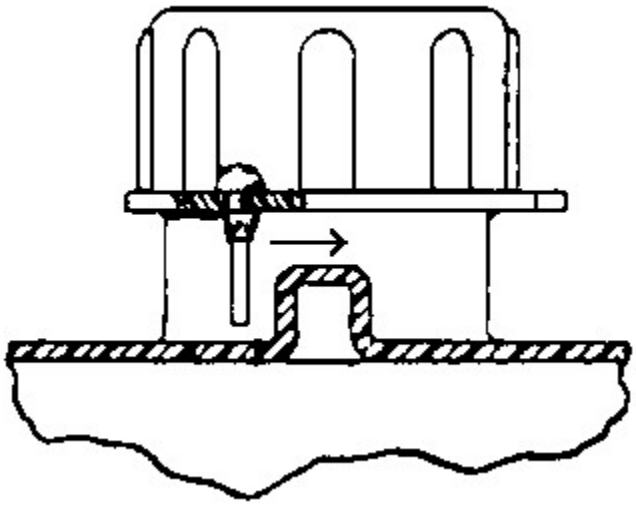

References relevant to classification in this group

This subclass/group does not cover:

Caps or cap-like covers with lines of weakness, tearing-strips, tags, or like opening or removal devices	B65D 41/32
Removable lids or covers with integral tamper element	B65D 43/0235
Locking devices with ratchet effect between relatively rotating parts	B65D 55/022
Closures requiring the combination of different actions in succession	B65D 50/06

Informative references

Attention is drawn to the following places, which may be of interest for search:

Tearable part of the closure	B65D 2101/0023

B65D 55/026

[N: initial opening or unauthorised access being indicated by a visual change using indicators other than tearable means, e.g. change of colour, pattern or opacity (B65D 55/066 takes precedence)]

Definition statement

This subclass/group covers:

Illustrative example of subject matter classified in this group:

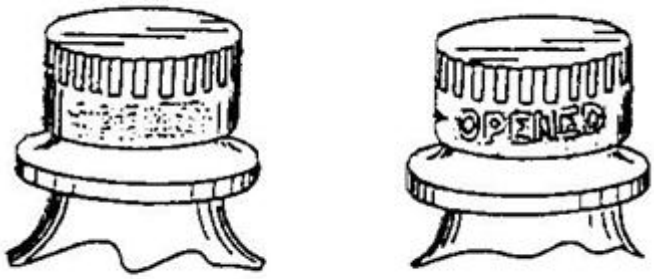

References relevant to classification in this group

This subclass/group does not cover:

Foil covers combined with outer closures and comprising interacting or interposed tamper indicating means visible through the outer closure	B65D 55/066

Informative references

Attention is drawn to the following places, which may be of interest for search:

Closures with special means for indicating unauthorised opening	B65D 27/30
End- or aperture-closing arrangements or devices, with special means for indicating unauthorised opening	B65D 33/34
Foil covers combined with outer closures and comprising interacting or interposed tamper indicating means visible through the outer closure	B65D 55/066

B65D 55/028

[N: initial opening or unauthorised access being indicated by the presence or absence of an audible or electrical signal]

Informative references

Attention is drawn to the following places, which may be of interest for search:

Containers provided with an acoustic device	B65D 5/4291
Closure being provided with transient audible or visual signaling means	B65D 51/248
Anti-theft means	B65D 2211/00

B65D 55/04

Spring clips, e.g. of wire, of sheet metal

Definition statement

This subclass/group covers:

Illustrative example of subject matter classified in this group:

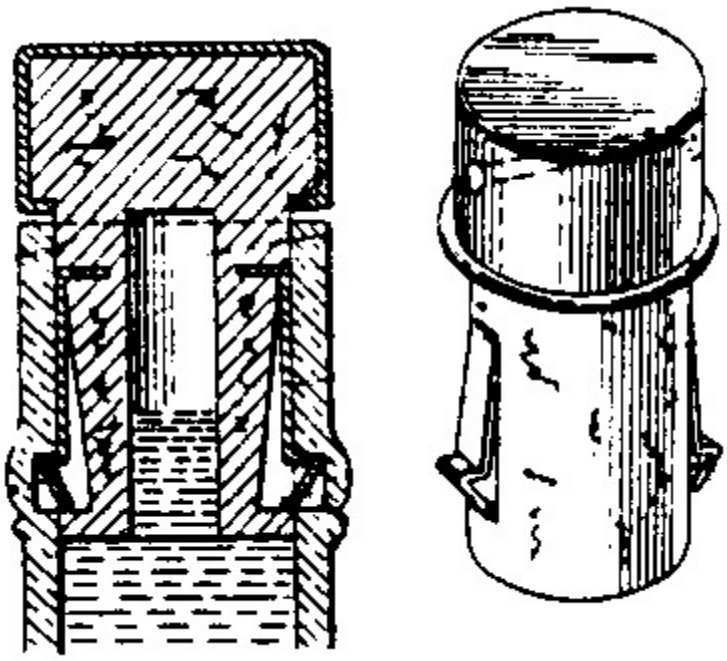

B65D 55/06

Deformable or tearable wires, strings, or strips (containers specially constructed to be opened by tear-strips, strings or the like B65D 17/00; caps or cap-like closures with tear-strips B65D 41/32); Use of seals, e.g. destructible locking pins ([N: B65D 55/022 takes precedence]; applying labels to bottles

B65C 3/06, B65C 9/00; seals per se G09F 3/00)

Definition statement

This subclass/group covers:

Illustrative example of subject matter classified in this group:

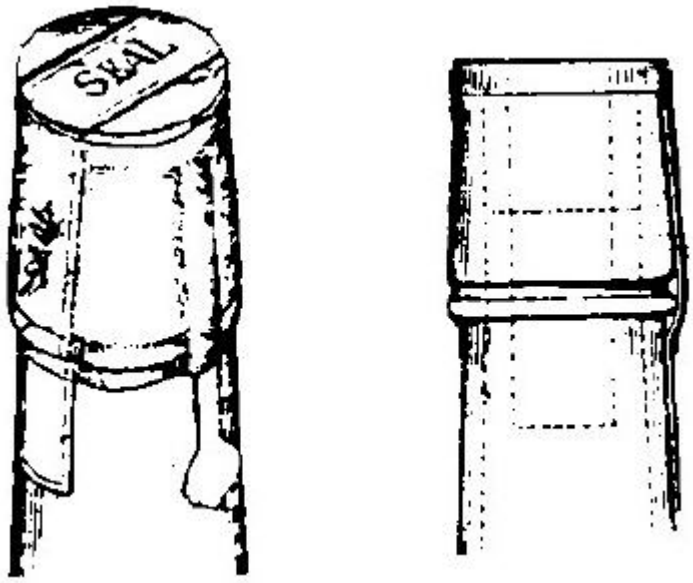

References relevant to classification in this group

This subclass/group does not cover:

Locking devices with ratchet effect between relatively rotating parts	B65D 55/022
Non-destructible locking pins	B65D 55/10
Use of seals	B65D 2255/06

Informative references

Attention is drawn to the following places, which may be of interest for search:

Flexible adhesive strips adapted to seal filling or discharging apertures	B65D 53/08
Destructible or permanently removable bands	B65D 55/0818
Seals per se	G09F 3/00

B65D 55/063

[N: Muzzlets]

Definition statement

This subclass/group covers:
Illustrative example of subject matter classified in this group:

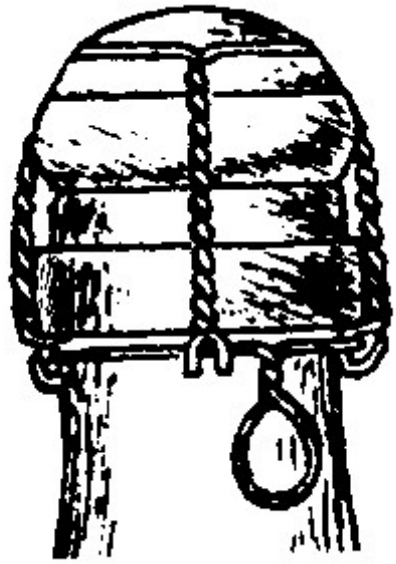

B65D 55/066

[N: Foil covers combined with outer closures and comprising interacting or interposed tamper indicating means visible through the outer closure, e.g. releasable coloured dyes, changeable patterns, pierceable membranes, visible through a transparent closure or through a window]

Definition statement

This subclass/group covers:
Illustrative example of subject matter classified in this group:

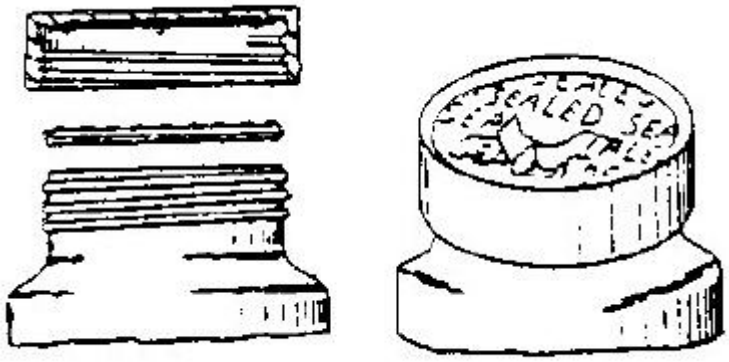

B65D 55/0809

[N: Destructible filamentary elements (non-destructible elements B65D 45/322)]

Definition statement

This subclass/group covers:

Illustrative example of subject matter classified in this group:

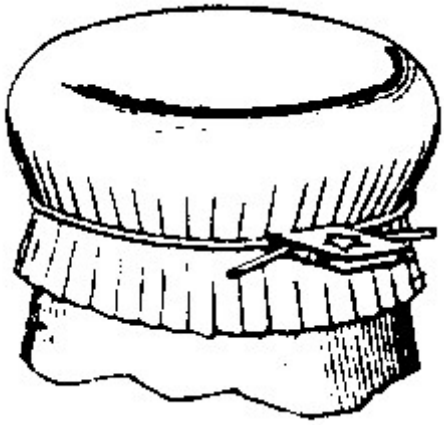

B65D 55/0818

[Destructible or permanently removable bands, e.g. adhesive]

Definition statement

This subclass/group covers:

Illustrative example of subject matter classified in this group:

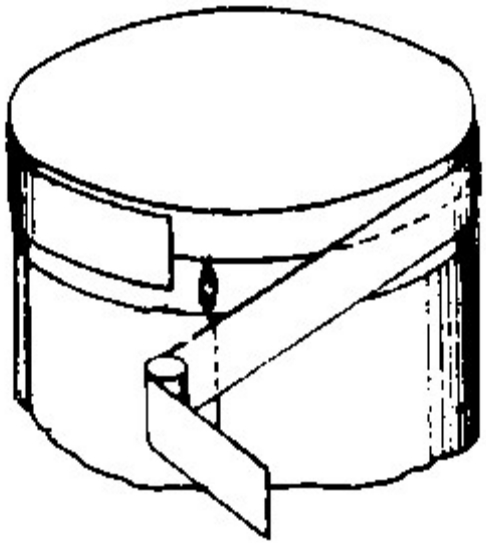

References relevant to classification in this group

This subclass/group does not cover:

Seals made of paper	B65D 55/06

Informative references

Attention is drawn to the following places, which may be of interest for search:

Tearing-strips or -wires	B65D 17/20
Tearing-strings or like flexible elements disposed beneath a wrapper, label, or other element of sheet material securing a lid, cover, or container mouth	B65D 77/36

B65D 55/0827

[N: Separate tamper bands inserted between container and closure (B65D 41/32 takes precedence)]

Definition statement

This subclass/group covers:

Illustrative example of subject matter classified in this group:

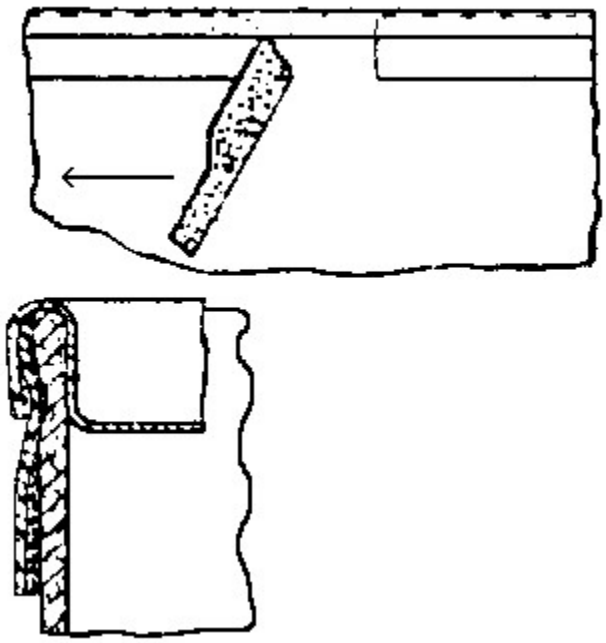

References relevant to classification in this group

This subclass/group does not cover:

Caps or cap-like covers with lines of weakness, tearing-strips, tags, or like opening or removal devices	B65D 41/32

Informative references

Attention is drawn to the following places, which may be of interest for search:

Tearing-strips or -wires	B65D 17/20

B65D 55/0836

[N: Metallic strips, e.g. soldered on container and lid (containers with integral tearing strips with tongues or tags for engagement by slotted keys B65D 17/22)]

Definition statement

This subclass/group covers:

Illustrative example of subject matter classified in this group:

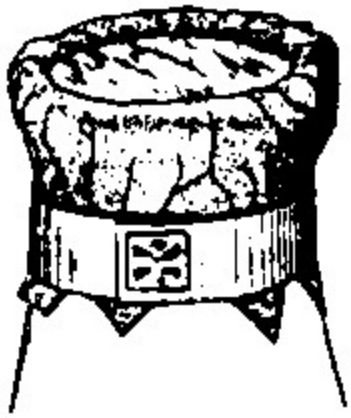

B65D 55/0845

[N: Metallic strips or cap-like collars having their edges crimped over part of the container and closure or other element, e.g. with C-shaped cross-section]

Definition statement

This subclass/group covers:

Illustrative example of subject matter classified in this group:

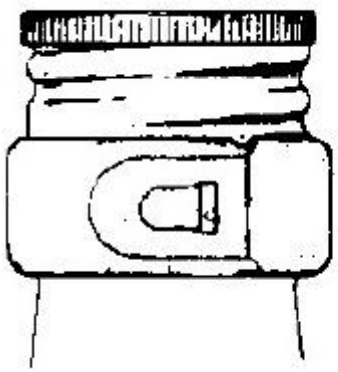

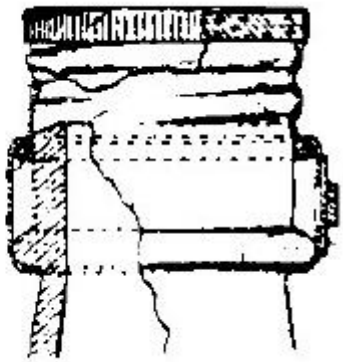

Informative references

Attention is drawn to the following places, which may be of interest for search:

Caps or cap-like covers adapted to be secured in position by permanent deformation of the wall-engaging parts made of metallic foil or like thin flexible material	B65D 41/44
Closures to be pierced by an	B65D 51/002

extracting-device for the contents and fixed on the container by separate retaining means	

B65D 55/0854

[N: Shrink-film bands (B65D 41/54, B65D 41/62 take precedence)]

Definition statement

This subclass/group covers:

Illustrative example of subject matter classified in this group:

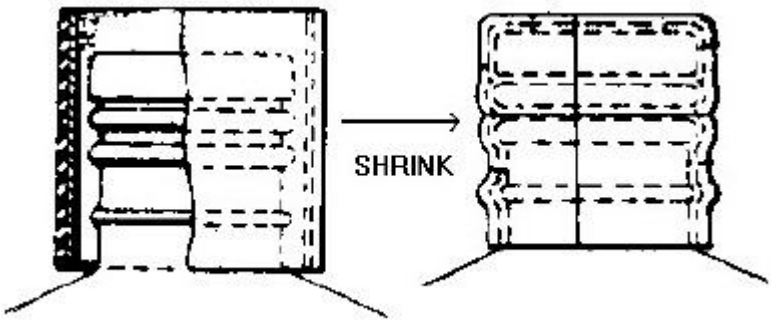

References relevant to classification in this group

This subclass/group does not cover:

Caps or cap-like covers made of shrinkable material or formed in situ by dipping	B65D 41/54
Secondary protective cap-like outer covers for closure members	B65D 41/62

B65D 55/0863

[N: Plastic snap-on cap-like collars having frangible parts (collar for maintaining rigid discs in sealing engagement with mouth of containers B65D 51/145)]

Definition statement

This subclass/group covers:

Illustrative example of subject matter classified in this group:

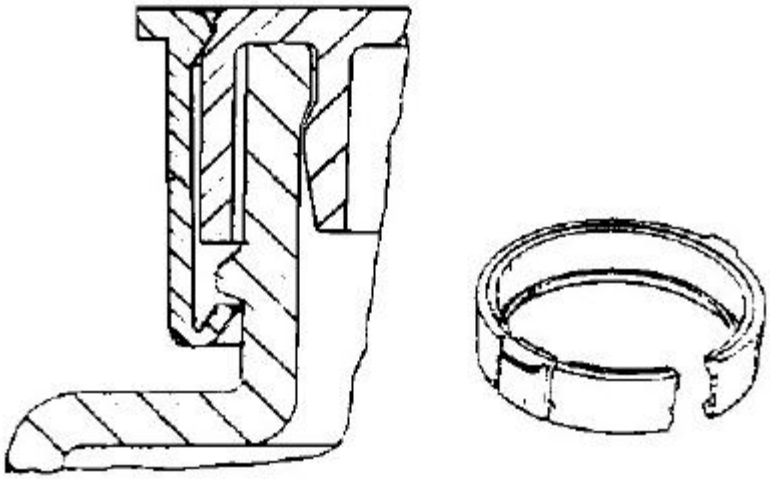

B65D 55/0872

[N: Destructible rigid elements snapping into annular grooves in closure for maintaining closure on container (non-destructible elements B65D 45/322)]

Definition statement

This subclass/group covers:
Illustrative example of subject matter classified in this group:

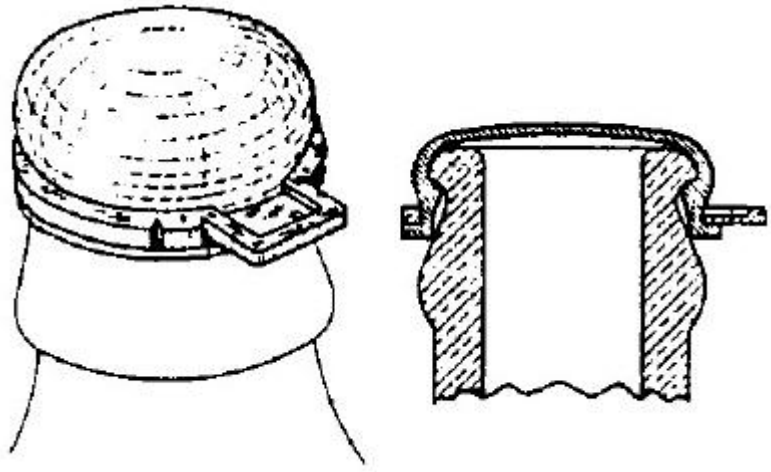

B65D 55/0881

[N: Closure not directly connected to container, but connected by means of a destructible intermediate ring (B65D 55/0863 takes precedence)]

Definition statement

This subclass/group covers:

Illustrative example of subject matter classified in this group:

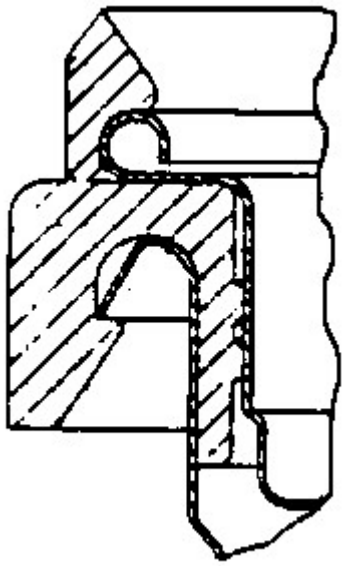

References relevant to classification in this group

This subclass/group does not cover:

Plastic snap-on cap-like collars having frangible parts	B65D 55/0863

Informative references

Attention is drawn to the following places, which may be of interest for search:

Tearing-strips or -wires	B65D 17/20

B65D 55/089

[N: Annular tamper band connected to the closure, but not coacting with the container for preventing initial downward motion, e.g. on two-parts child-proof closures (B65D 41/32 takes precedence)]

Definition statement

This subclass/group covers:

Illustrative example of subject matter classified in this group:

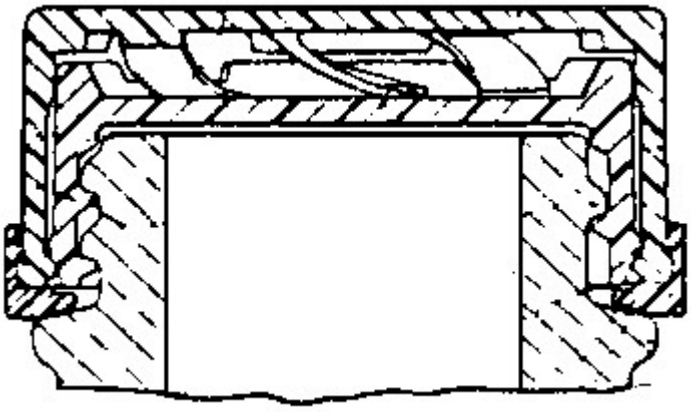

References relevant to classification in this group

This subclass/group does not cover:

Caps or cap-like covers with lines of weakness, tearing-strips, tags, or like opening or removal devices	B65D 41/32

B65D 55/10

Locking pins [N: (destructible locking pins B65D 55/06)]

Definition statement

This subclass/group covers:

Illustrative example of subject matter classified in this group:

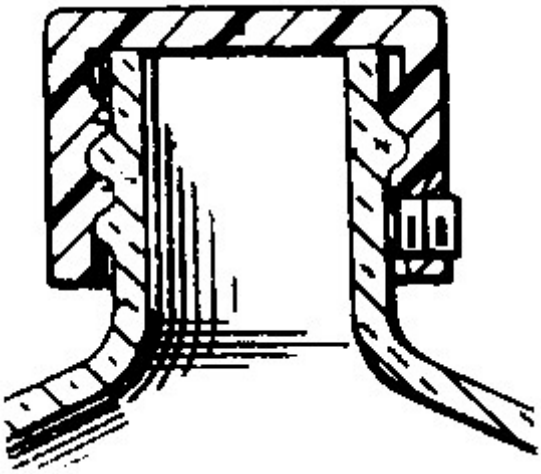

B65D 55/12

Devices or means with relatively-moving parts co-operating with abutments on bottle or jar ([N: B65D 55/022 takes precedence]; applications of locks B65D 55/14)

Definition statement

This subclass/group covers:

Illustrative example of subject matter classified in this group:

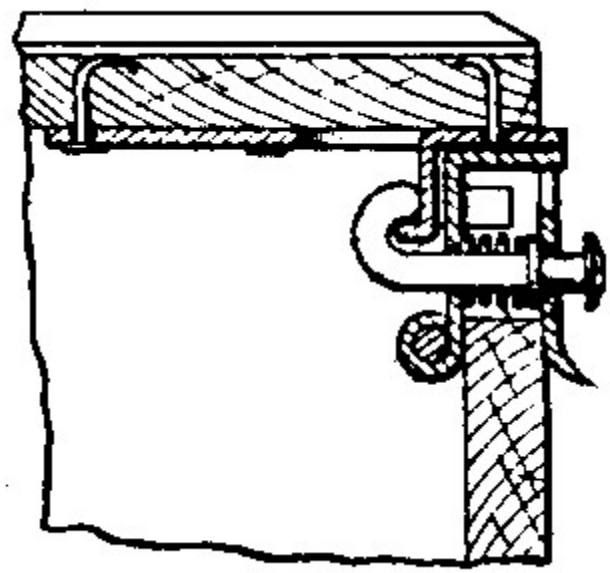

References relevant to classification in this group

This subclass/group does not cover:

Locking devices with ratchet effect between relatively rotating parts	B65D 55/022

B65D 55/14

Applications of locks, e.g. of permutation or key-controlled locks

Definition statement

This subclass/group covers:

Illustrative example of subject matter classified in this group:

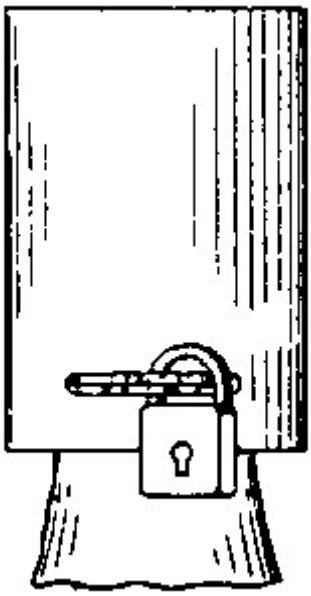

B65D 55/145

[N: of permutation locks]

Definition statement

This subclass/group covers:
Illustrative example of subject matter classified in this group:

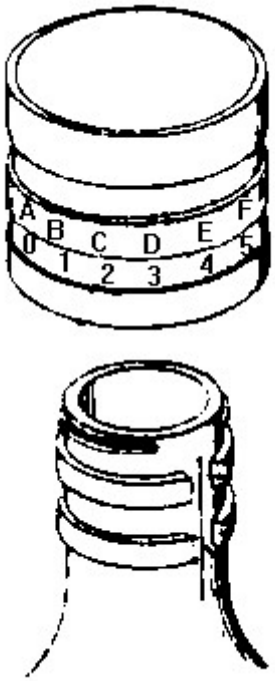

B65D 55/16

Devices preventing loss of removable closure members

Definition statement

This subclass/group covers:

Illustrative example of subject matter classified in this group:

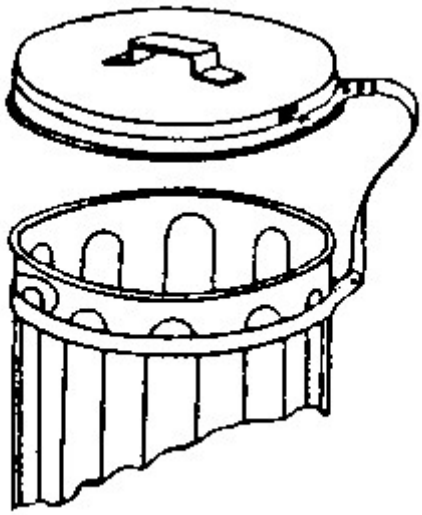

Informative references

Attention is drawn to the following places, which may be of interest for search:

Pliable tubular containers adapted to be permanently deformed to expel contentsfor preventing loss of removable closure members	B65D 35/42
Closures with discharging devices other than pumps and closure-retaining means	B65D 47/14

B65D 55/165

[N: by an element constrained within the container neck, i.e. the element passing through the container opening]

Definition statement

This subclass/group covers:

Illustrative example of subject matter classified in this group:

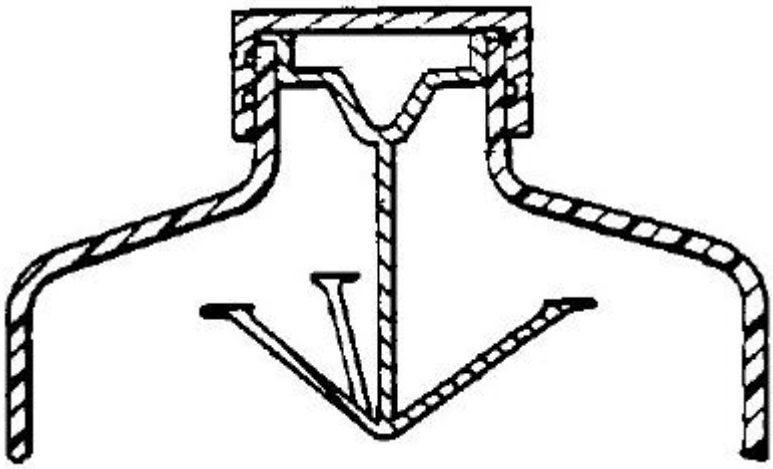

B65D 57/00

Internal frames or supports for flexible articles, e.g. stiffeners; Separators for articles packaged in stacks or groups, e.g. for preventing adhesion of sticky articles [N: (B65D71/00E takes precedence)]

Definition statement

This subclass/group covers:

Illustrative example of subject matter classified in this group:

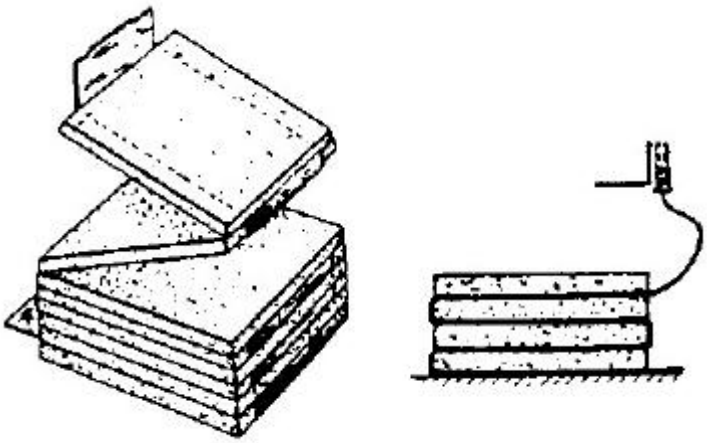

References relevant to classification in this group

This subclass/group does not cover:

Internal frames for bags	B65D 33/02
Spacers or ‘stickers’ for drying wood	F26B 25/18, F26B 25/185

or similar material	

Informative references

Attention is drawn to the following places, which may be of interest for search:

Anti-slip separators compare with	B65D 33/005
Stack holders or separators	B65G 1/14

B65D 59/00

Plugs, sleeves, caps, or like rigid or semi-rigid elements for protecting parts of articles or for bundling articles, e.g. protectors for screw-threads, end caps for tubes or for bundling rod-shaped articles [N: (stopping flow from or in pipes or hoses by means of plugs F16L 55/11, by means of caps F16L 55/115; protection of pipes or objects of similar shape against external or internal damage or wear F16L 57/00)]

B65D 59/02

Plugs

Definition statement

This subclass/group covers:

Illustrative example of subject matter classified in this group:

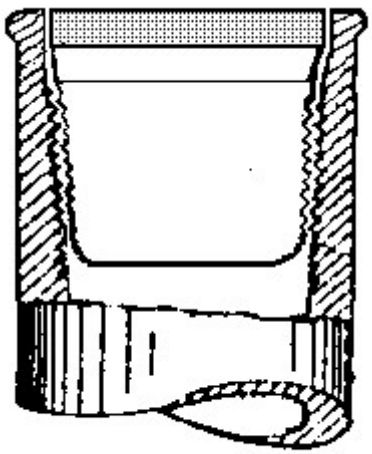

B65D 59/04

Sleeves, e.g. postal tubes

Definition statement

This subclass/group covers:
Illustrative example of subject matter classified in this group:

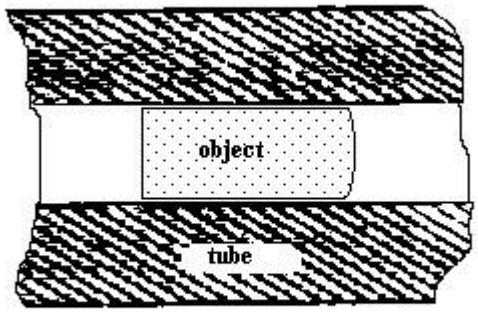

References relevant to classification in this group

This subclass/group does not cover:

Tube-like magazines for electric components	H05K 13/0084

Informative references

Attention is drawn to the following places, which may be of interest for search:

Containers of polygonal cross-section with end closures formed by inward-folding of self-locking flaps hinged to tubular body	B65D 5/10
Integral elements for containers having tubular body walls formed by folding inwardly of extensions hinged to the upper or lower edges of the body	B65D 5/5011

B65D 59/06

Caps

Definition statement

This subclass/group covers:
Illustrative example of subject matter classified in this group:

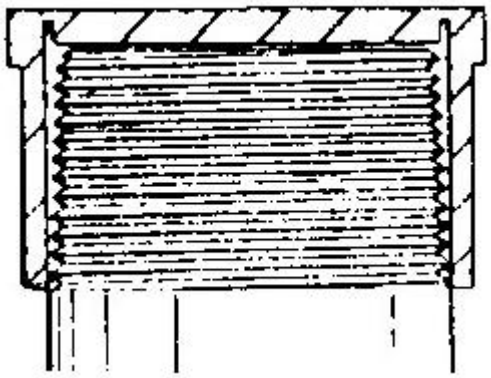

B65D 59/08

of polygonal cross-section

Definition statement

This subclass/group covers:
Illustrative example of subject matter classified in this group:

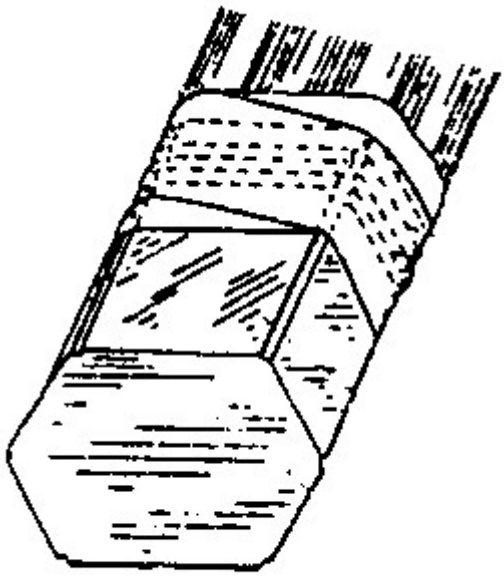

B65D 61/00

External frames or supports adapted to be assembled around, or applied to, articles (collapsible containers B65D 5/00, B65D 7/24, B65D 9/12, B65D 11/18)

Definition statement

This subclass/group covers:

Illustrative example of subject matter classified in this group:

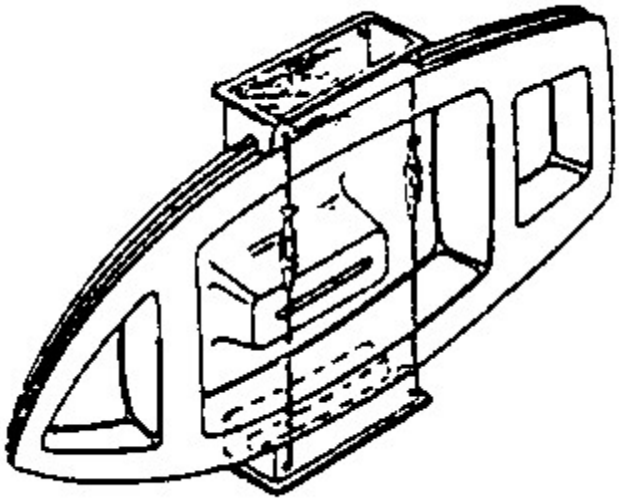

References relevant to classification in this group

This subclass/group does not cover:

Holders or wrappers as eating aids for fast food, e.g. hamburgers,	A47G 21/001
External frames for bags	B65D 33/02

B65D 63/00

Flexible elongated elements, e.g. straps, for bundling or supporting articles (attached to or integral with bags or sacks B65D 33/165; for securing load B60P 7/0823; for supporting pipes, cables or protective tubing F16L 3/137; [N: for bundling pipes F16L 3/233])

References relevant to classification in this group

This subclass/group does not cover:

Decorative rosettes or ribbons	B65D 67/00
Devices for clamping the clamping element	B23P
Circlips	F16B
Tighteners for straps	B60P 7/0823

Informative references

Attention is drawn to the following places, which may be of interest for search:

Buttons, pins, buckles, slide fasteners, or the like	A44B
Cranes; Load-engaging elements or devices for cranes, capstans, winches, or tackles	B66C

B65D 63/04

Joints produced by deformation of ends of elements

Definition statement

This subclass/group covers:

Illustrative example of subject matter classified in this group:

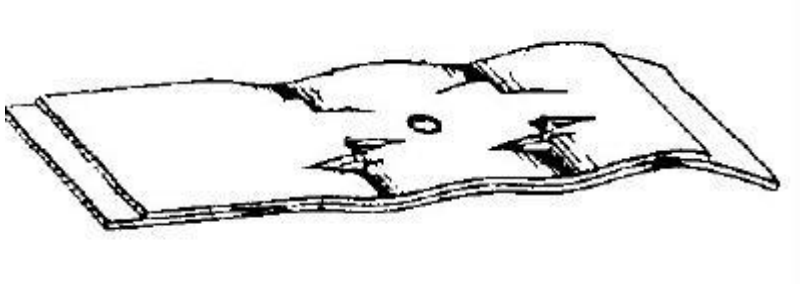

B65D 63/06

Joints produced by application of separate securing

members, e.g. by deformation thereof

Definition statement

This subclass/group covers:
Illustrative example of subject matter classified in this group:

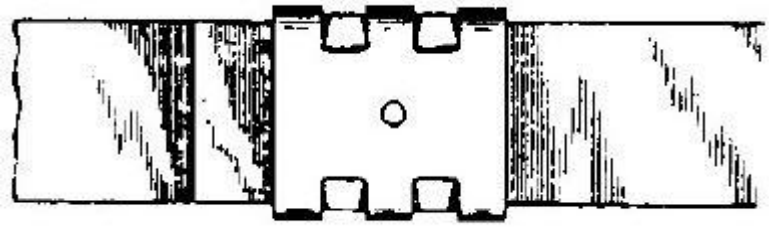

References relevant to classification in this group

This subclass/group does not cover:

For non-metallic straps	B65D 63/14
Tensioning straps for securing loads	B60P 7/0823

B65D 63/08

Joints using buckles, wedges, or like locking members attached to the ends of the elements

Definition statement

This subclass/group covers:
Illustrative example of subject matter classified in this group:

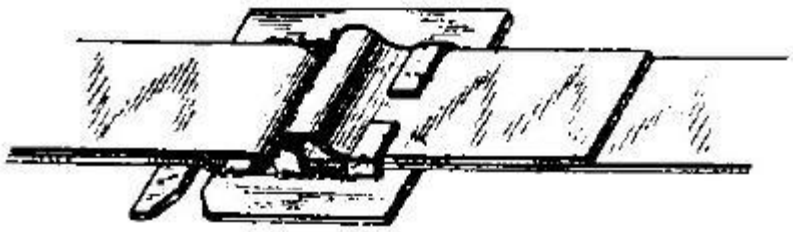

B65D 63/10

Non-metallic straps, tapes, or bands; Filamentary elements,

e.g. strings, threads, wires; Joints between ends thereof

References relevant to classification in this group

This subclass/group does not cover:

Flexible bands	F16L 3/137, F16L 3/233

Special rules of classification within this group

The use of available Indexing Codes is mandatory.

B65D 63/1009

[N: Adhesive tapes (composition of the tapes C09J 7/00)]

Definition statement

This subclass/group covers:
Illustrative example of subject matter classified in this group:



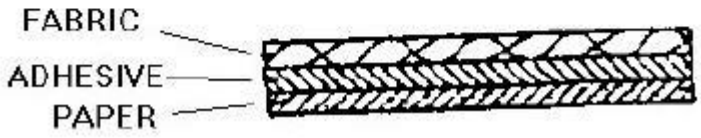

Informative references

Attention is drawn to the following places, which may be of interest for search:

With end closures formed by inward folding of flaps and securing them by adhesive tapes, labels or the like; for decoration purposes	B65D 5/0236
Destructible or permanently removable bands	B65D 55/0818

Packaging elements adhered to the articles	B65D 71/0085
Double sided adhesive tape	B65D 2313/08

Special rules of classification within this group

The use of available Indexing Codes is mandatory.

B65D 63/1018

[N: Joints produced by application of integral securing members, e.g. buckles, wedges, tongue and slot, locking head and teeth or the like]

Definition statement

This subclass/group covers:

Illustrative example of subject matter classified in this group:

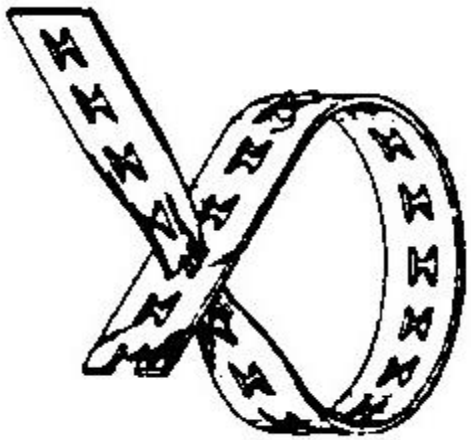

References relevant to classification in this group

This subclass/group does not cover:

Tools for applying bundling straps and bundling strap bandoliers	B65B 13/027
For flexible bands	F16L 3/233, F16L 3/137, H02G 3/26

Special rules of classification within this group

The use of available Indexing Codes is mandatory.

B65D 63/1027

[N: the integral securing member being formed as a female and male locking member, e.g. locking head and locking teeth, or the like]

Definition statement

This subclass/group covers:

Illustrative example of subject matter classified in this group:

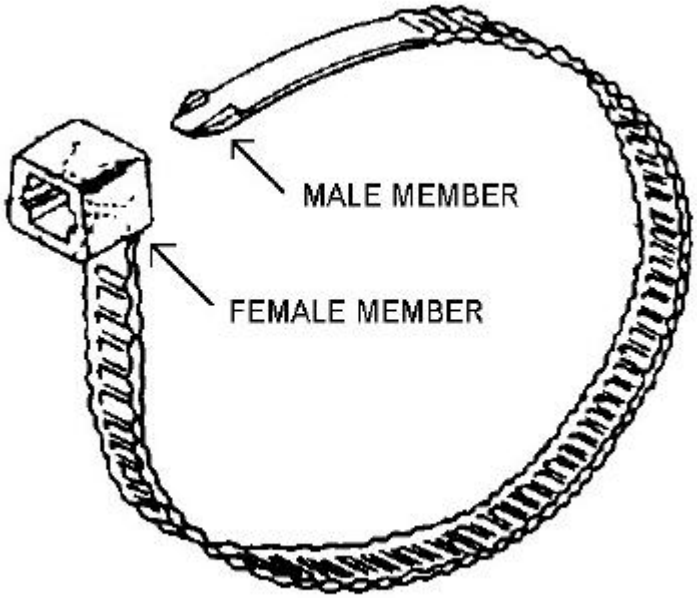

References relevant to classification in this group

This subclass/group does not cover:

Cable tie bandoliers for use with automatic tools	B65B 13/027

Special rules of classification within this group

The use of available Indexing Codes is mandatory.

B65D 63/1036

[N: the female locking member being provided with at least one metal barb]

Definition statement

This subclass/group covers:

Illustrative example of subject matter classified in this group:

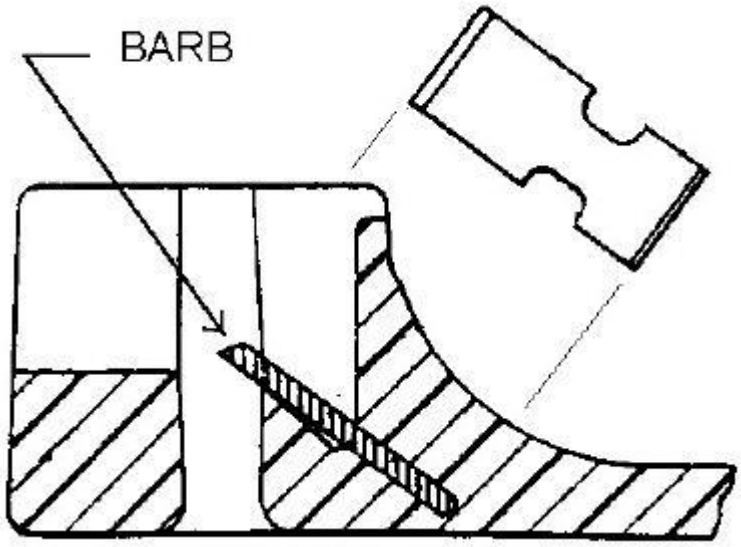

Special rules of classification within this group

The use of available Indexing Codes is mandatory.

B65D 63/1063

[N: the female locking member being provided with at least one plastic barb]

Definition statement

This subclass/group covers:

Illustrative example of subject matter classified in this group:

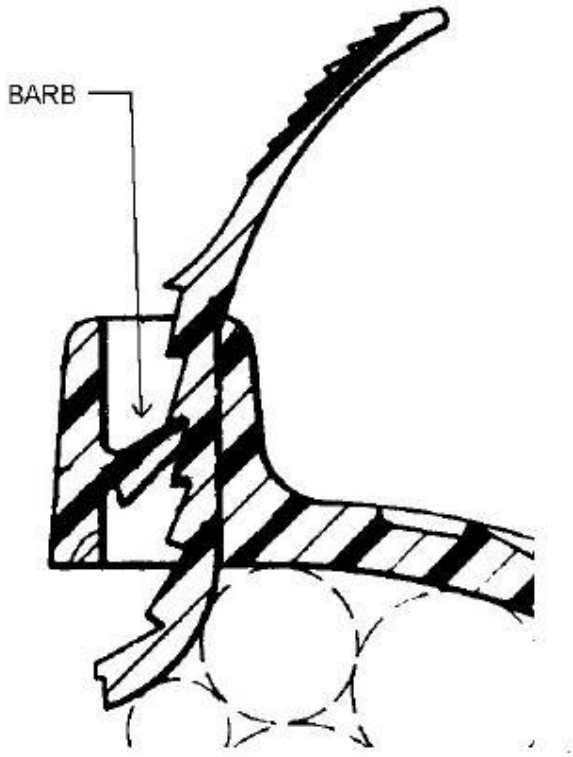

Special rules of classification within this group

The use of available Indexing Codes is mandatory.

B65D 63/1072

[N: the barb having a plurality of serrations]

Definition statement

This subclass/group covers:
Illustrative example of subject matter classified in this group:

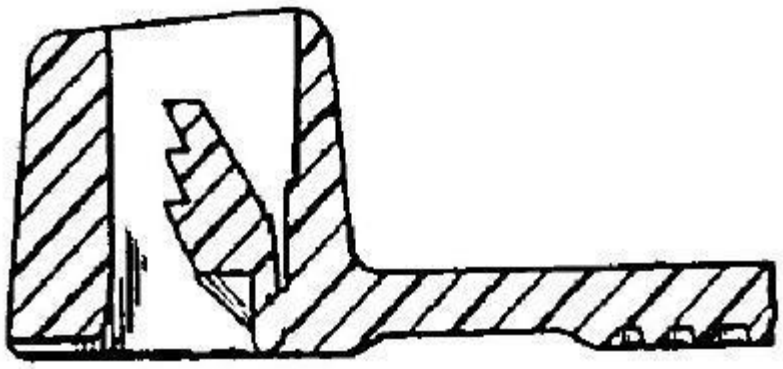

Special rules of classification within this group

The use of available Indexing Codes is mandatory.

B65D 63/1081

[N: with barbs situated on opposite sides of, or concentrically in, the female locking member]

Definition statement

This subclass/group covers:
Illustrative example of subject matter classified in this group:

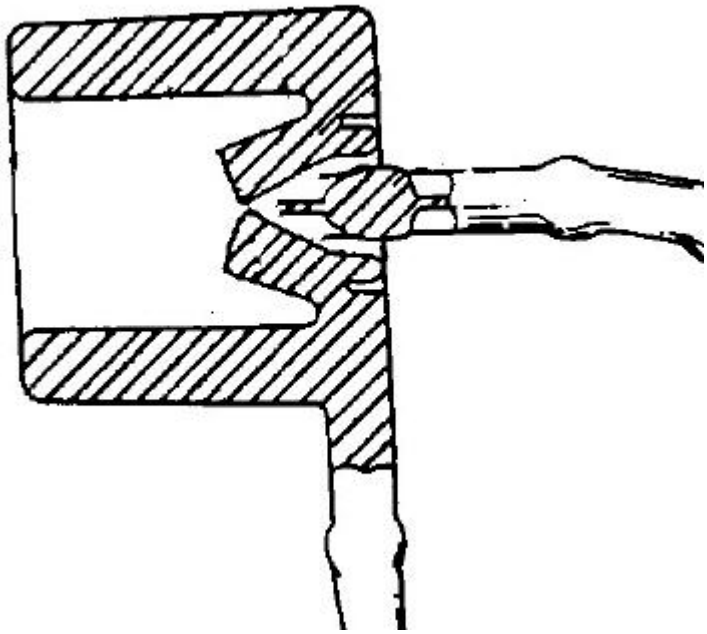

Special rules of classification within this group

The use of available Indexing Codes is mandatory.

B65D 63/109

[N: Application of elastics or like elements]

Definition statement

This subclass/group covers:
Illustrative example of subject matter classified in this group:

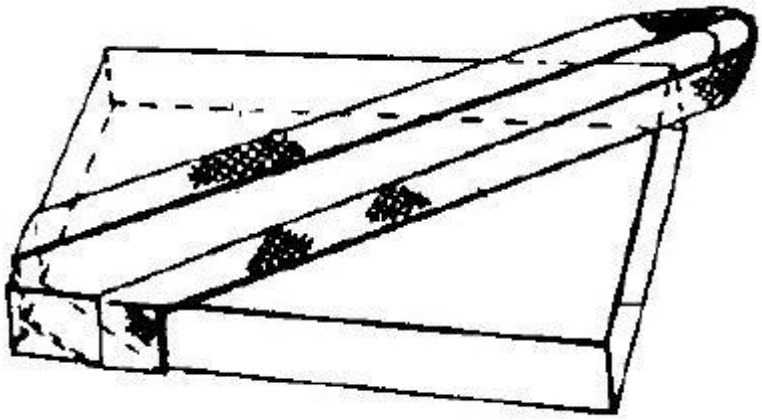

Special rules of classification within this group

The use of available Indexing Codes is mandatory.

B65D 63/12

Joints produced by deformation or tying of ends of elements

Definition statement

This subclass/group covers:
Illustrative example of subject matter classified in this group:



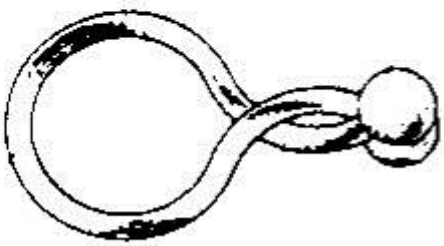

Special rules of classification within this group

The use of available Indexing Codes is mandatory.

B65D 63/14

Joints produced by application of separate securing members

Definition statement

This subclass/group covers:
Illustrative example of subject matter classified in this group:

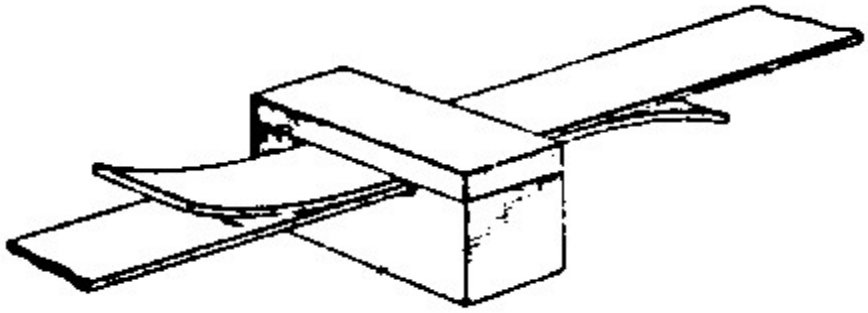

References relevant to classification in this group

This subclass/group does not cover:

For clamps made of metal	B65D 33/1641
For metallic straps	B65D 63/06
Tensioning straps for securing loads	B60P 7/0823

Special rules of classification within this group

The use of available Indexing Codes is mandatory.

B65D 63/16

Joints using buckles, wedges, or like locking members attached to the end of the element

Definition statement

This subclass/group covers:
Illustrative example of subject matter classified in this group:

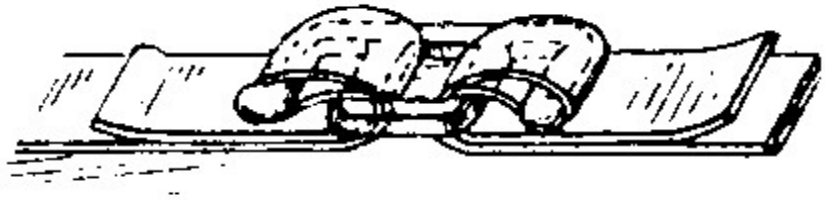

Special rules of classification within this group

The use of available Indexing Codes is mandatory.

B65D 63/18

Elements provided with handles or other suspension means

Definition statement

This subclass/group covers:
Illustrative example of subject matter classified in this group:

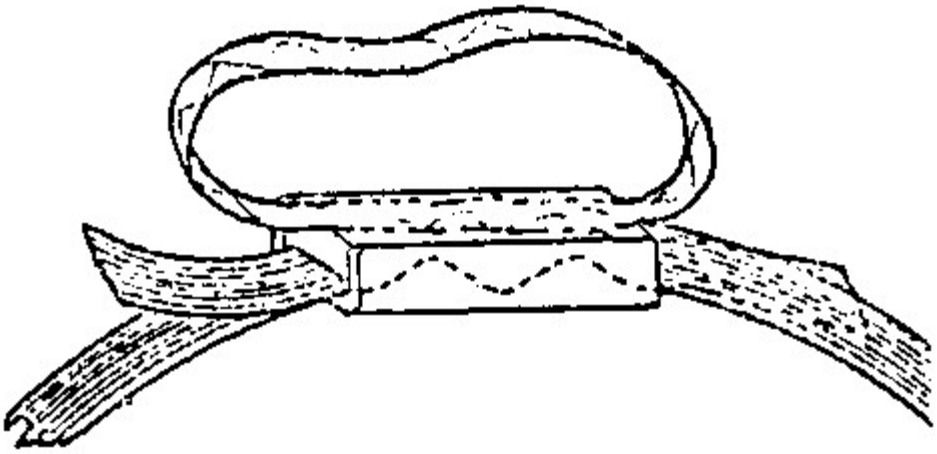

References relevant to classification in this group

This subclass/group does not cover:

Loose handles for carrying purposes	A45F 5/10
Slings	B66C

B65D 65/00

Wrappers or flexible covers; Packaging materials of special type or form (wrappers or envelopes with shock-absorbing properties B65D 81/03; layered products per se B32B; materials per se, see the relevant classes)

B65D 65/04

non-rectangular

References relevant to classification in this group

This subclass/group does not cover:

Holders or wrappers as eating aids for fast food, e.g. hamburgers	A47G 21/001

Informative references

Attention is drawn to the following places, which may be of interest for search:

Layered products per se	B32B

B65D 65/06

formed with foldable flaps, e.g. interlocking flaps

Special rules of classification within this group

The use of available Indexing Codes is mandatory.

B65D 65/08

with fastening elements, e.g. slide fasteners

Definition statement

This subclass/group covers:
Illustrative example of subject matter classified in this group:

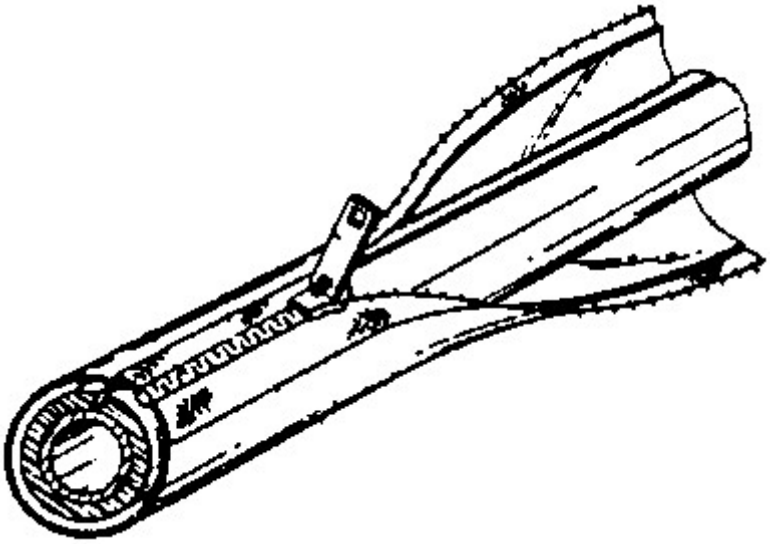

B65D 65/14

with areas coated with adhesive

Definition statement

This subclass/group covers:
Illustrative example of subject matter classified in this group:

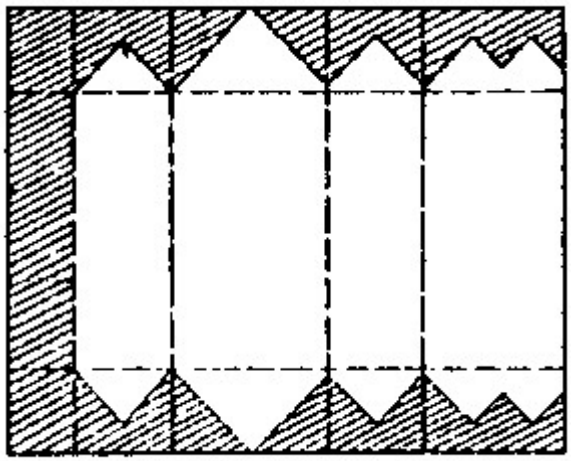

Special rules of classification within this group

The use of available Indexing Codes is mandatory.

B65D 65/18

with some areas transparent and others opaque

Definition statement

This subclass/group covers:
Illustrative example of subject matter classified in this group:

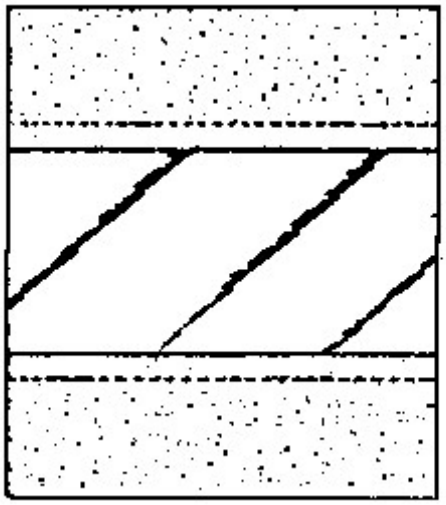

Informative references

Attention is drawn to the following places, which may be of interest for search:

Windows or other apertures	B65D 33/04
Inspection openings and windows	B65D 75/522

B65D 65/22

Details

References relevant to classification in this group

This subclass/group does not cover:

Opening devices	B65D 75/58

B65D 65/24

Tabs or other projections for locating contents

Definition statement

This subclass/group covers:

Illustrative example of subject matter classified in this group:

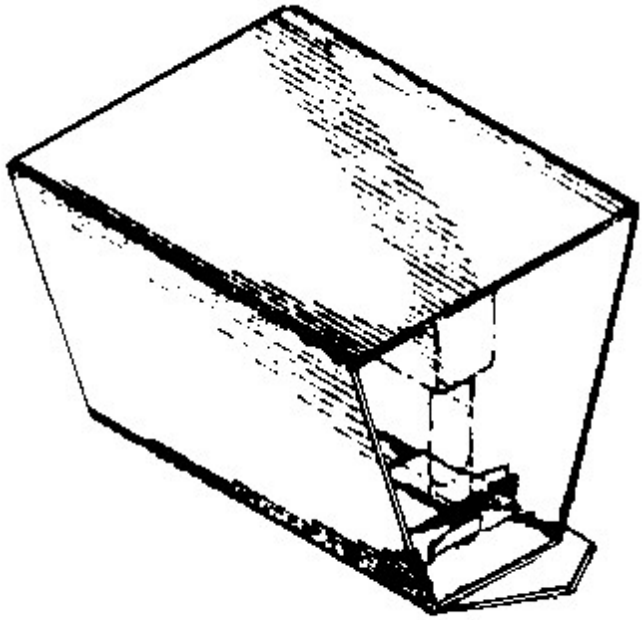

B65D 65/38

Packaging materials of special type or form

References relevant to classification in this group

This subclass/group does not cover:

Shrink or stretch films	B65D 75/00
Combustible packaging for combustible materials	B65D 85/00
Packages for compounding ingredients for rubber, the package being used in the mixing process	C08J 3/22

Special rules of classification within this group

The use of available Indexing Codes is mandatory.

B65D 65/40

Applications of laminates for particular packaging purposes

[N: (B65D 1/0215, B65D 1/28, B65D 3/22, B65D 5/0281, B65D 5/563, B65D 9/30, B65D 29/02, B65D 31/02, B65D 75/26, B65D77/20D, B65D 81/1275, B65D 81/3811, B65D 81/3823, B65D 81/3834, B65D 81/3846, B65D 81/3858, B65D 81/3874, B65D 81/3886, B65D 81/3897 take precedence; laminates per se or laminated packages characterised by the composition or disposition of the layers: B32B; packaging purpose covered by another group of B65D: said group and B32B)]

Definition statement

This subclass/group covers:

Illustrative example of subject matter classified in this group:

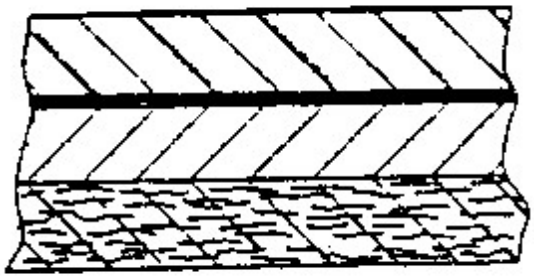

References relevant to classification in this group

This subclass/group does not cover:

Bottles or similar containers with necks or like restricted apertures multilayered	B65D 1/0215
Thin-walled containers formed of laminated material	B65D 1/28
Sacks with laminated or multiple walls	B65D 29/02
Containers having bodies or peripheral walls of curved or partially curved cross-section with double walls; with walls incorporating air-chambers; with walls made of laminated material	B65D 3/22
Bags or like containers made of paper and having structural provision for thickness of contents with laminated	B65D 31/02

walls	
Containers of polygonal cross-section, the tubular body presenting double or multiple walls	B65D 5/0281
Laminated linings; Coatings	B65D 5/563
Articles or materials wholly enclosed in laminated sheets or wrapper blanks	B65D 75/26
Containers, packaging elements, or packages laminated or bonded to the inner wall of a container	**B65D77/20D**
Containers, packaging elements, or packages, for contents presenting particular transport or storage problems, or adapted to be used for non-packaging purposes after removal of contents laminated or bonded to the inner wall of a container	B65D 81/1275
Rigid container in the form of a barrel or vat formed of different materials, e.g. laminated or foam filling between walls	B65D 81/3811
Rigid container being in the form of a box, tray or like container formed of different materials, e.g. laminated or foam filling between walls	B65D 81/3823
Rigid container being in the form of a box, tray or like container with one or more containers located inside the external container formed of different materials, e.g. laminated or foam filling between walls	B65D 81/3834
Rigid container in the form of a bottle, jar or like container formed of different materials, e.g. laminated or foam filling between walls	B65D 81/3846
Semi-rigid container folded up from one or more blanks formed of	B65D 81/3858

different materials, e.g. laminated or foam filling between walls	
Drinking cups or like containers formed of different materials, e.g. laminated or foam filling between walls	B65D 81/3874
Insulating sleeves or jackets for cans, bottles, barrels formed of different materials, e.g. laminated or foam filling between walls	B65D 81/3886
Containers, packaging elements, or packages, for contents presenting particular transport or storage problems, or adapted to be used for non-packaging purposes after removal of contents, formed of different materials	B65D 81/3897
Applications of laminates as wall material, e.g. plywood	B65D 9/30

B65D 65/403

[N: with at least one corrugated layer]

Definition statement

This subclass/group covers:

Illustrative example of subject matter classified in this group:

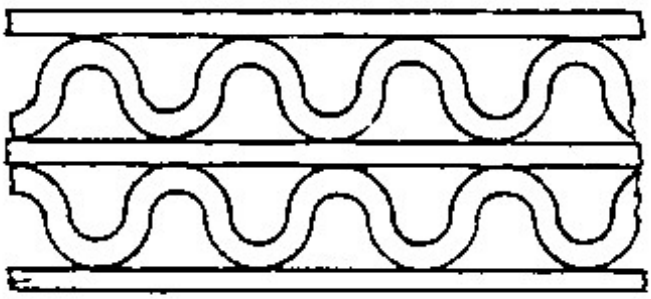

B65D 65/406

[N: with at least one layer provided with a relief other than corrugations]

Definition statement

This subclass/group covers:
Illustrative example of subject matter classified in this group:

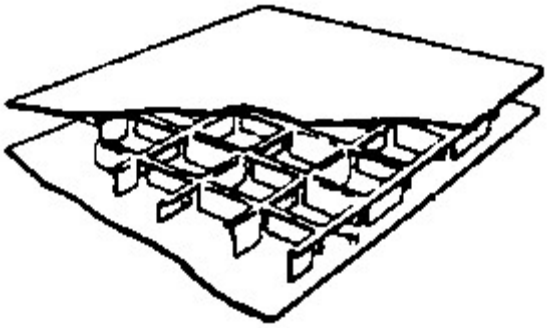

B65D 65/42

Applications of coated or impregnated materials

Definition statement

This subclass/group covers:
Illustrative example of subject matter classified in this group:

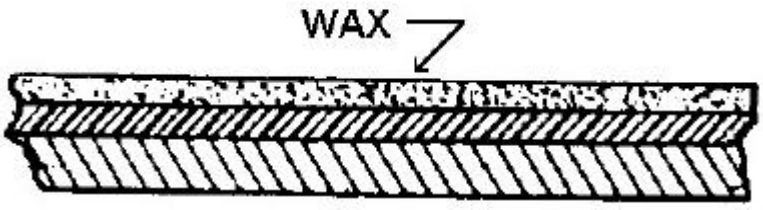

B65D 65/44

Applications of resilient shock-absorbing materials, e.g. foamed plastics material, honeycomb material

Definition statement

This subclass/group covers:
Illustrative example of subject matter classified in this group:

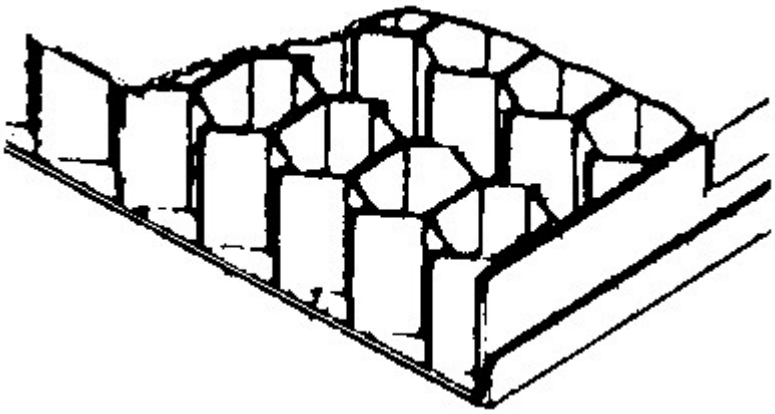

References relevant to classification in this group

This subclass/group does not cover:

Separating trays for fruit or the like	B65D 1/36, B65D 85/34
Pallets having honeycomb paper support means	**B65D19/34**

B65D 65/46

Applications of disintegrable, dissolvable or edible materials

References relevant to classification in this group

This subclass/group does not cover:

Detergent materials	C11D 17/042
Cement mixtures contained in dissolvable bags	E04C 5/012, E04C 5/073

B65D 65/463

[N: Edible packaging materials]

Informative references

Attention is drawn to the following places, which may be of interest for search:

Baking; Edible doughs	A21

Food or foodstuffs; Their treatment, not covered by other classes	A23
Food, foodstuffs, or non-alcoholic beverages, not covered by subclasses A23B to A23L; their preparation or treatment	A23L
Shaping or working of foodstuffs, not fully covered by a single other subclass	A23P

B65D 65/466

[N: Bio- or photodegradable packaging materials]

Informative references

Attention is drawn to the following places, which may be of interest for search:

Details of processes or apparatus for reducing environmental damage or for working-up compositions comprising inert blowing agents or biodegradable components	B29C 67/2285
Absorbent pads, e.g. sanitary towels, swabs or tampons for external or internal application to the body; Supporting or fastening means therefor; Tampon applicators	A61F 13/15
Parts, details or accessories for books or filing appliances: materials, e.g. biodegradable	B42P 2241/28
Indexing Codes relating to refuse receptacles: Biodegradable	B65F 2250/105

B65D 67/00

Kinds or types of packaging elements not otherwise provided for [N: (B65D 5/425 takes precedence)]

Definition statement

This subclass/group covers:
Illustrative example of subject matter classified in this group:

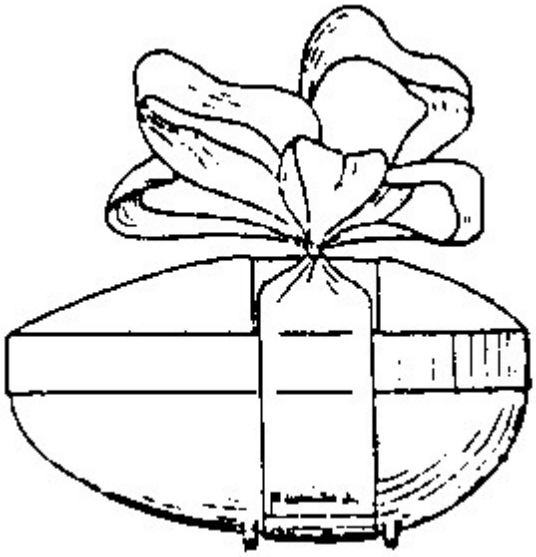

References relevant to classification in this group

This subclass/group does not cover:

Decorative ribbons or rosettes	B65D 5/4212, B65D 33/004
Decoration elements	B65D 5/425

B65D 67/02

Clips or clamps for holding articles together for convenience of storage or transport

Definition statement

This subclass/group covers:
Illustrative example of subject matter classified in this group:

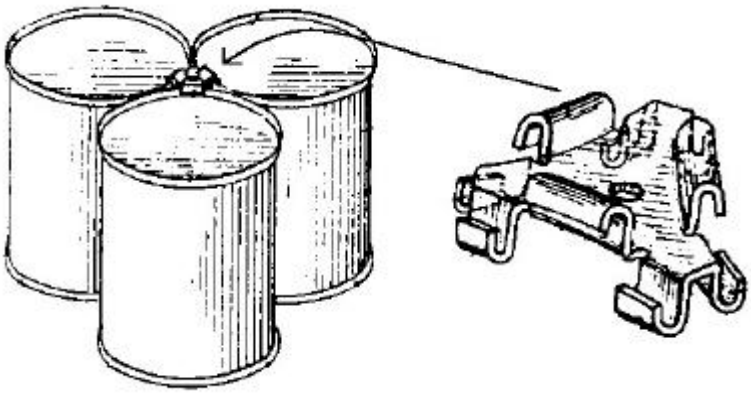

References relevant to classification in this group

This subclass/group does not cover:

Connectors for solely coaxial connection	B65D 71/502
Releasable fastenings clips	F16B 2/20

Informative references

Attention is drawn to the following places, which may be of interest for search:

Bundles of articles, held together by packaging elements for convenience of storage or transport, comprising a plurality of articles held together only partially by packaging elements formed otherwise than by folding a blank	B65D 71/50

B65D 69/00

Articles joined together for convenience of storage or transport without the use of packaging elements ([N: packages joined together B65D 5/427, B65D 21/02]; joining articles for convenience of packaging B65B 17/02)

Definition statement

This subclass/group covers:

Illustrative example of subject matter classified in this group:

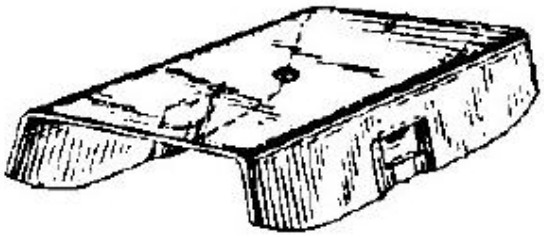

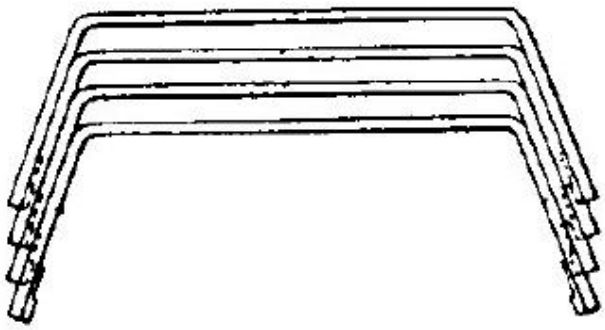

References relevant to classification in this group

This subclass/group does not cover:

Coaxial connectors	B65D 71/502

Informative references

Attention is drawn to the following places, which may be of interest for search:

Containers specially shaped, or provided with fittings or attachments stackable or joined together side-by-side	B65D 21/0201
Cylindrical or polygonal containers composed of two or more separate containers joined to each other	B65D 81/3288

B65D 71/00

Bundles of articles held together by packaging elements for convenience of storage or transport, e.g. portable segregating carrier for plural receptacles such as beer cans, pop bottles;

Bales of material (binding of hay or straw A01D, A01F 1/00; bundling or baling B65B, e.g. B65D 13/00, B65D 27/00)

References relevant to classification in this group

This subclass/group does not cover:

Ice-cream cone holders	A47G 23/02
Ice-cream cone carriers	A47G 23/06
Packages containing several articles intended to be suspended from a display rod	B65D 83/0088
Containers, packaging elements or packages specially adapted for compressible or flexible articles of other shapes	B65D 85/16

Special rules of classification within this group

Documents classed in B65D 71/0003 to B65D 71/0081 and in B65D 71/12 to B65D 71/38 must also get all the possible codes of B65D 2571/00123.

B65D 71/0003

[N: Tray-like elements provided with handles, for storage or transport of several articles, e.g. bottles, tins, jars]

Definition statement

This subclass/group covers:

Illustrative example of subject matter classified in this group:

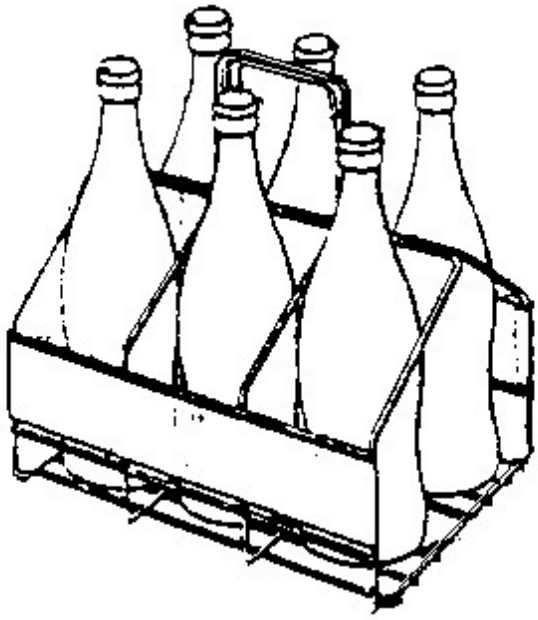

Special rules of classification within this group

The use of available Indexing Codes is mandatory.

B65D 71/0007

[N: without partitions]

Definition statement

This subclass/group covers:
Illustrative example of subject matter classified in this group:

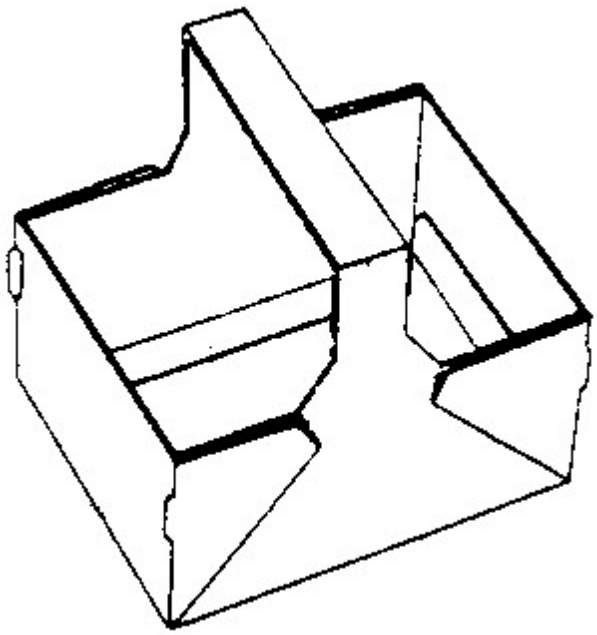

Special rules of classification within this group

The use of available Indexing Codes is mandatory.

B65D 71/0014

[N: with one longitudinal partition]

Definition statement

This subclass/group covers:
Illustrative example of subject matter classified in this group:

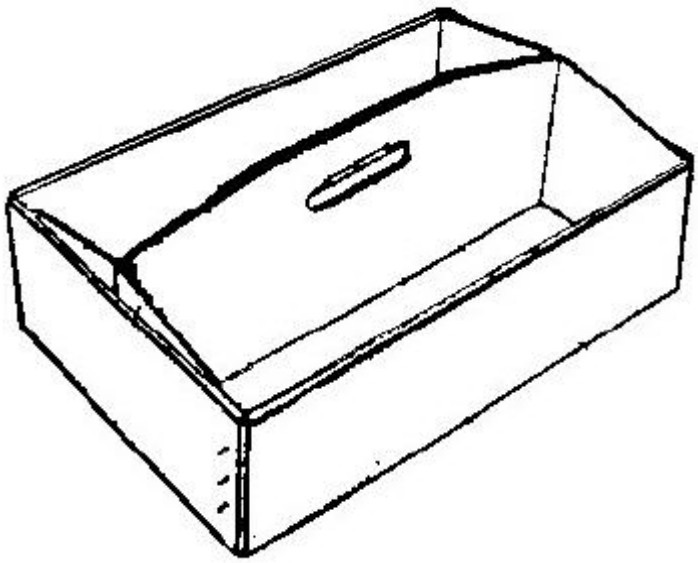

Special rules of classification within this group

The use of available Indexing Codes is mandatory.

B65D 71/0022

[N: formed by folding or erecting one blank, and provided with vertical partitions]

Definition statement

This subclass/group covers:

Illustrative example of subject matter classified in this group:

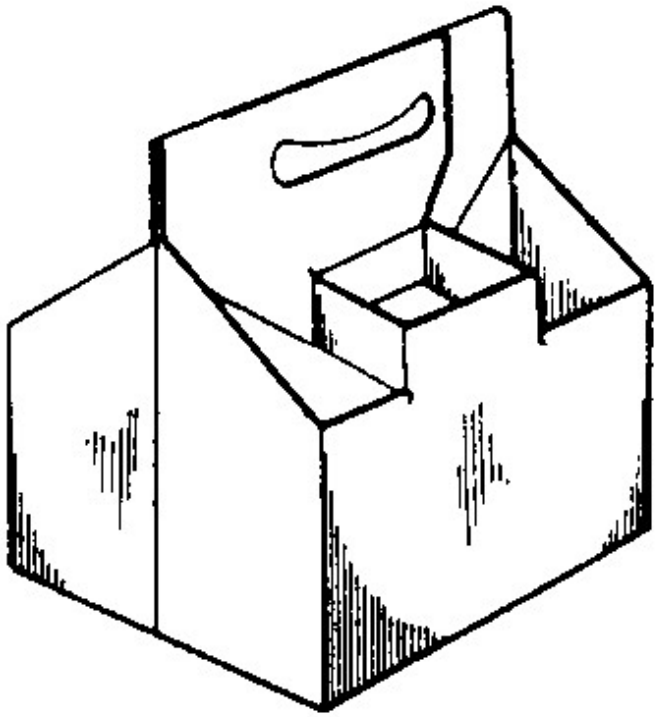

References relevant to classification in this group

This subclass/group does not cover:

Formed by folding one blank so as to form a tubular element in which the upper wall is provided with openings through which the articles extend partially	B65D 71/0029

Special rules of classification within this group

The use of available Indexing Codes is mandatory.

B65D 71/0033

[N: with parts of the walls bent against one another so as to form a longitudinal partition for two rows of articles]

Definition statement

This subclass/group covers:
Illustrative example of subject matter classified in this group:

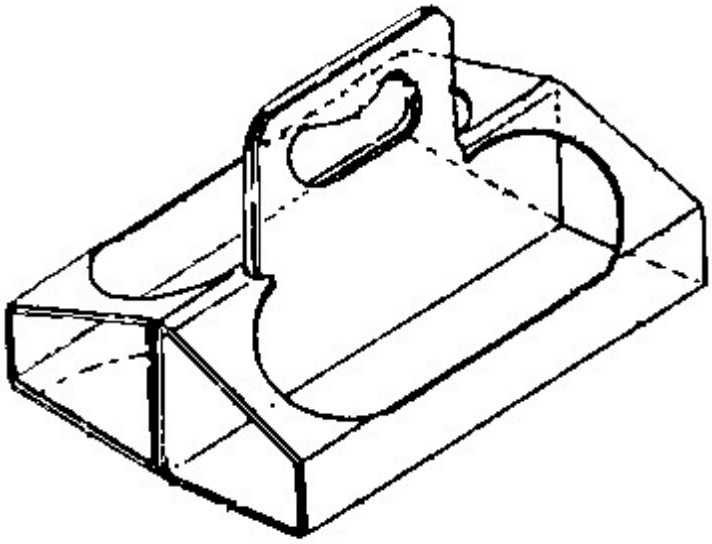

Special rules of classification within this group

The use of available Indexing Codes is mandatory.

B65D 71/0037

[N: with additional locating elements for the articles]

Definition statement

This subclass/group covers:
Illustrative example of subject matter classified in this group:

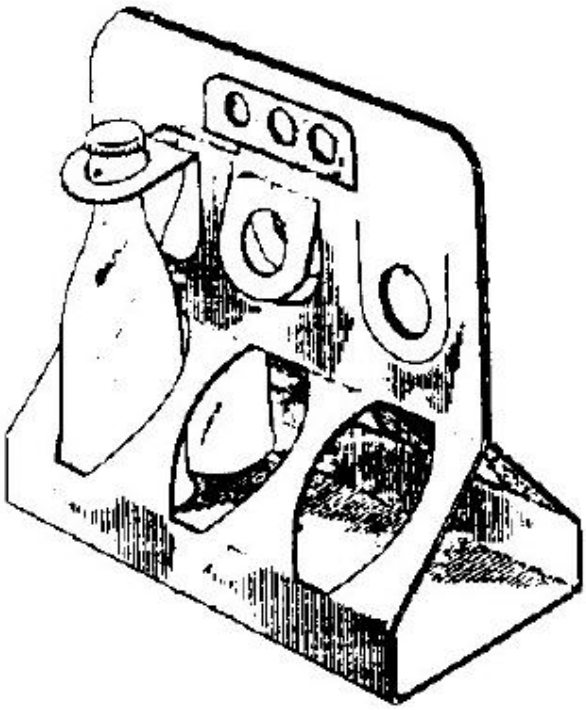

Special rules of classification within this group

The use of available Indexing Codes is mandatory.

B65D 71/0048

[N: with walls wrapping around a great part of the articles]

Definition statement

This subclass/group covers:
Illustrative example of subject matter classified in this group:

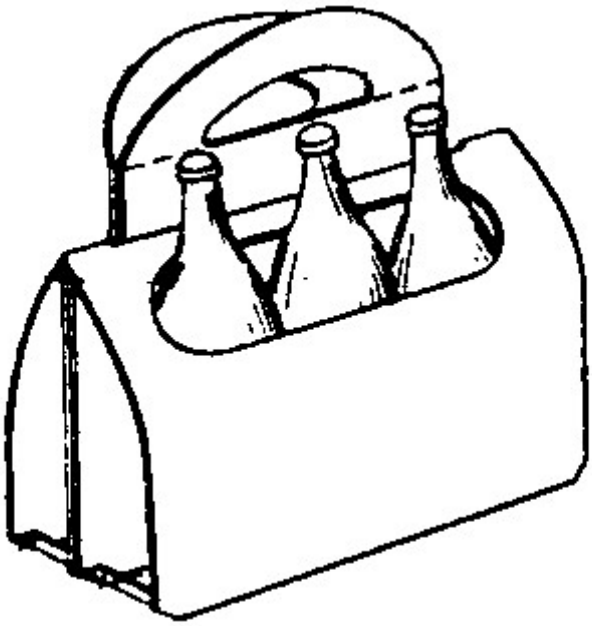

Special rules of classification within this group

The use of available Indexing Codes is mandatory.

B65D 71/0051

[N: with additional locating elements for the articles]

Definition statement

This subclass/group covers:
Illustrative example of subject matter classified in this group:

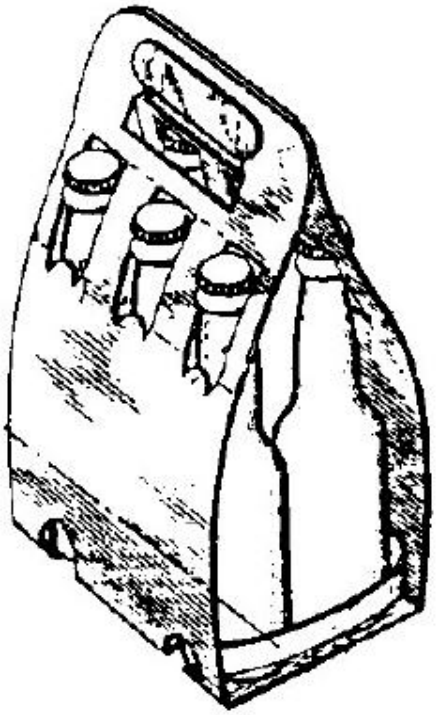

Special rules of classification within this group

The use of available Indexing Codes is mandatory.

B65D 71/0062

[N: for holding one row of articles]

Definition statement

This subclass/group covers:
Illustrative example of subject matter classified in this group:

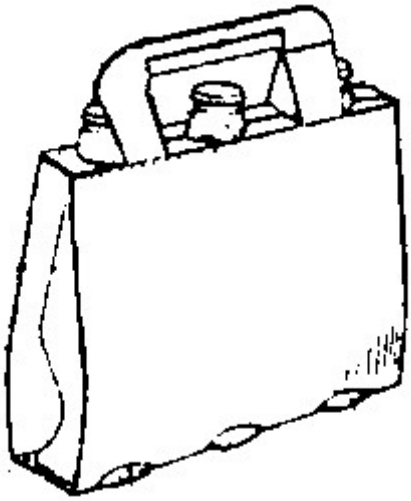

Special rules of classification within this group

The use of available Indexing Codes is mandatory.

B65D 71/0066

[N: with additional locating elements for the articles]

Definition statement

This subclass/group covers:
Illustrative example of subject matter classified in this group:

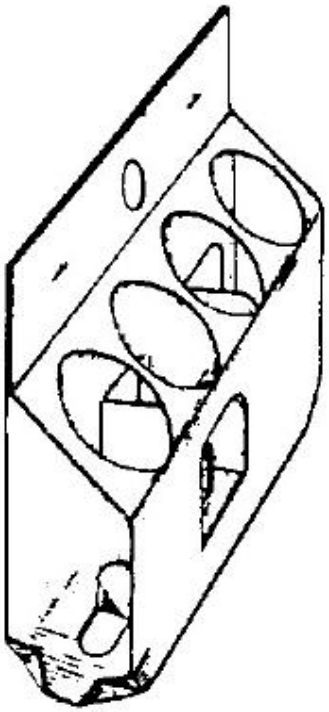

Special rules of classification within this group

The use of available Indexing Codes is mandatory.

B65D 71/0077

[N: formed by folding and interconnecting of two or more blanks]

Definition statement

This subclass/group covers:
Illustrative example of subject matter classified in this group:

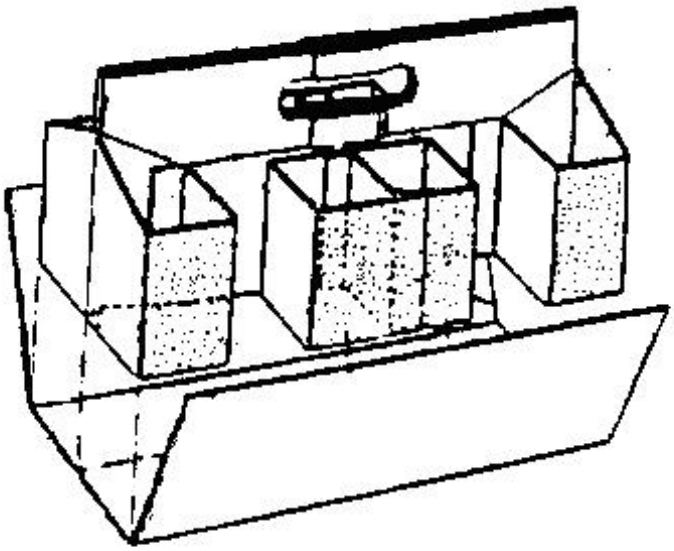

Special rules of classification within this group

The use of available Indexing Codes is mandatory.

B65D 71/0081

[N: with separately attached handles]

Special rules of classification within this group

The use of available Indexing Codes is mandatory.

B65D 71/0085

[N: Packaging elements adhered to the articles, e.g. a carton sheet (adhesive tapes B65D 63/1009)]

Definition statement

This subclass/group covers:
Illustrative example of subject matter classified in this group:

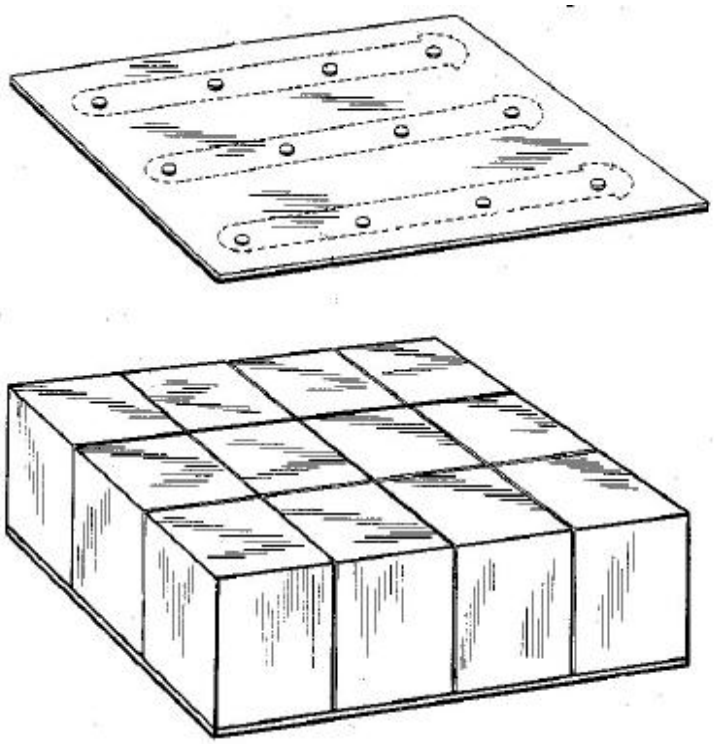

Informative references

Attention is drawn to the following places, which may be of interest for search:

Adhesive or cohesive means for holding the contents attached to the container	B65D 2313/10

B65D 71/0088

[N: Palletisable loads, i.e. loads intended to be transported by means of a fork-lift truck]

Definition statement

This subclass/group covers:

Illustrative example of subject matter classified in this group:

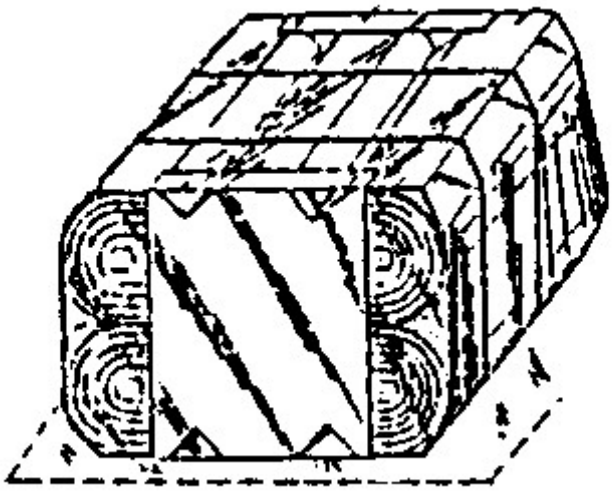

Special rules of classification within this group

The use of available Indexing Codes is mandatory.

B65D 71/0092

[N: provided with one or more rigid supports, at least one dimension of the supports corresponding to a dimension of the load, e.g. skids]

Definition statement

This subclass/group covers:

Illustrative example of subject matter classified in this group:

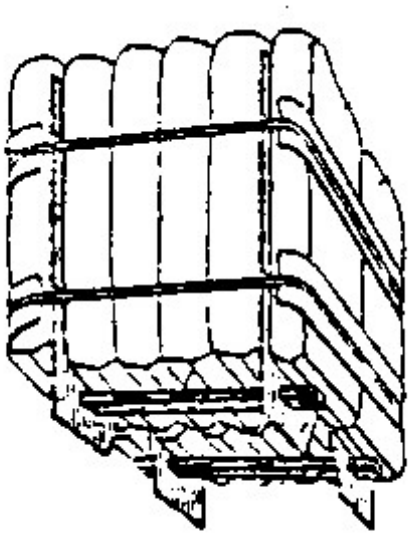

Special rules of classification within this group

The use of available Indexing Codes is mandatory.

B65D 71/0096

[N: the dimensions of the supports corresponding to the periphery of the load, e.g. pallets]

Definition statement

This subclass/group covers:
Illustrative example of subject matter classified in this group:

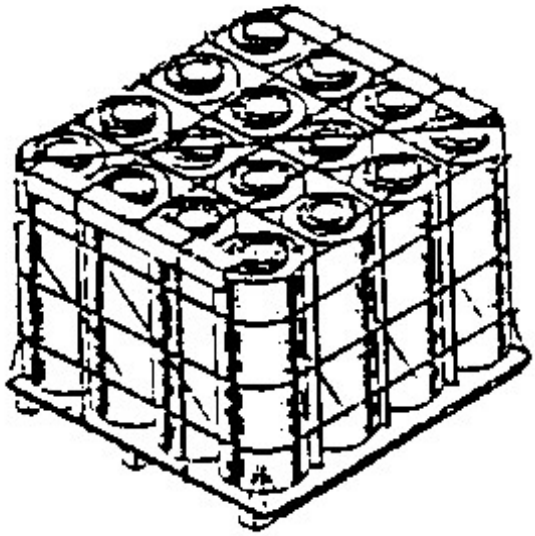

Special rules of classification within this group

The use of available Indexing Codes is mandatory.

B65D 71/02

Arrangements of flexible binders

Definition statement

This subclass/group covers:
Illustrative example of subject matter classified in this group:

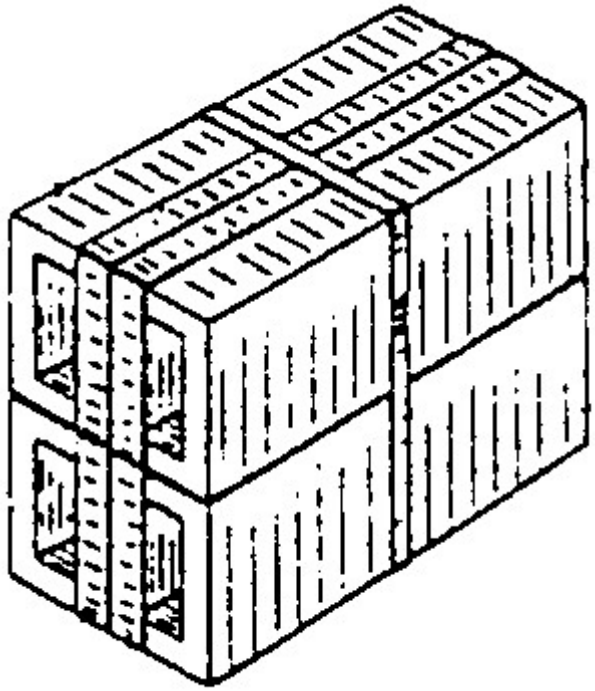

References relevant to classification in this group

This subclass/group does not cover:

Palletisable loads whereby the binder is not described	B65D 71/0088
Slings	B66C 1/00
When the binder is not described	B65D 71/02

Special rules of classification within this group

The use of available Indexing Codes is mandatory.

B65D 71/04

with protecting or supporting elements arranged between binder and articles or materials, e.g. for preventing chafing of binder

Definition statement

This subclass/group covers:

Illustrative example of subject matter classified in this group:

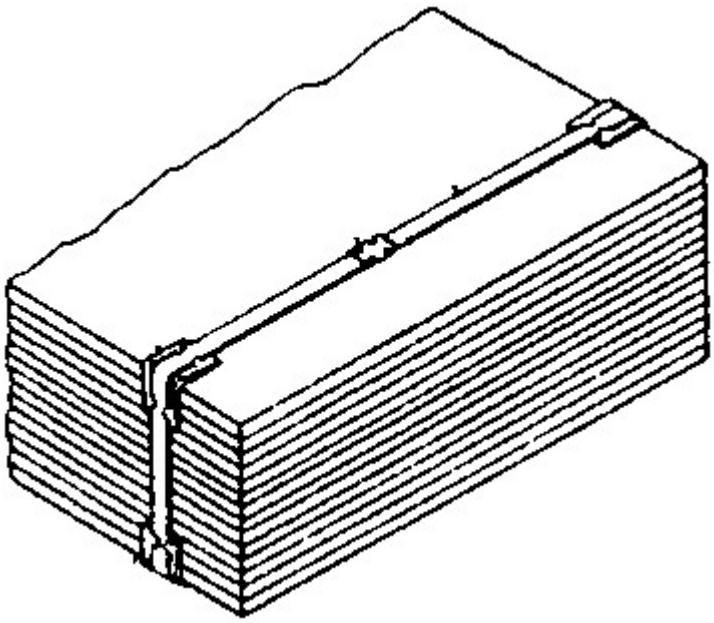

References relevant to classification in this group

This subclass/group does not cover:

Palletisable loads whereby the element is not described	B65D 71/0088
Slings with load protectors	B66C 1/122
When the element is not described	B65D 71/04

Informative references

Attention is drawn to the following places, which may be of interest for search:

Corner, edge or end protectors	B65D 81/053

B65D 71/06

Packaging elements holding or encircling completely or almost completely the bundle of articles, e.g. wrappers [N0802]

Informative references

Attention is drawn to the following places, which may be of interest for search:

Containers of polygonal cross-section the tubular body having no end closures	B65D 5/04

Special rules of classification within this group

The use of available Indexing Codes is mandatory.

B65D 71/063

[N: Wrappers formed by one or more films or the like, e.g. nets (B65D 71/08 takes precedence; wrappers formed by folding a single blank B65D 71/12; wrappers formed by folding two or more blanks B65D 71/38)]

References relevant to classification in this group

This subclass/group does not cover:

Nets per se	B65D 29/00
Wrappers shrunk by heat	B65D 71/08

B65D 71/066

[N: and provided with inserts (B65D 7/10 takes precedence)]

Definition statement

This subclass/group covers:

Illustrative example of subject matter classified in this group:

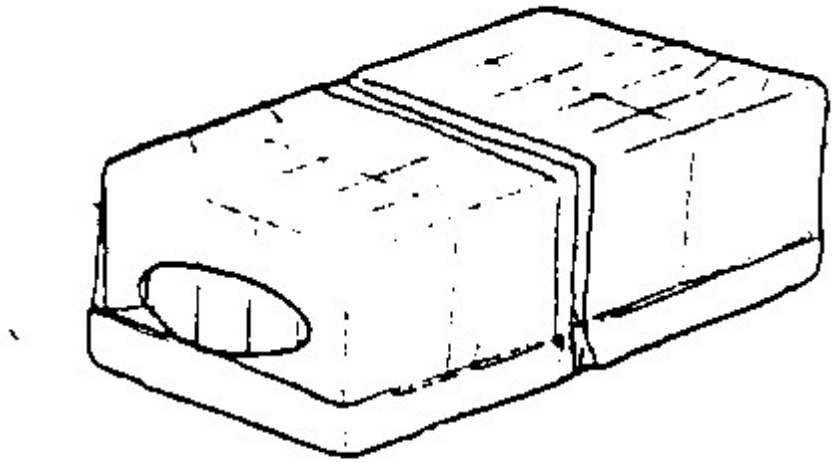

References relevant to classification in this group

This subclass/group does not cover:

Containers having bodies formed by interconnecting or uniting two or more rigid, or substantially rigid, components made wholly or mainly of metal: Of drawer-and-shell type	B65D 7/10

B65D 71/08

Wrappers shrunk by heat [N: or under tension, e.g. stretch films, films tensioned by compressed articles (wrappers formed by folding a single blank B65D 71/12; wrappers formed by folding two or more blanks B65D 71/38)]

Definition statement

This subclass/group covers:

Illustrative example of subject matter classified in this group:

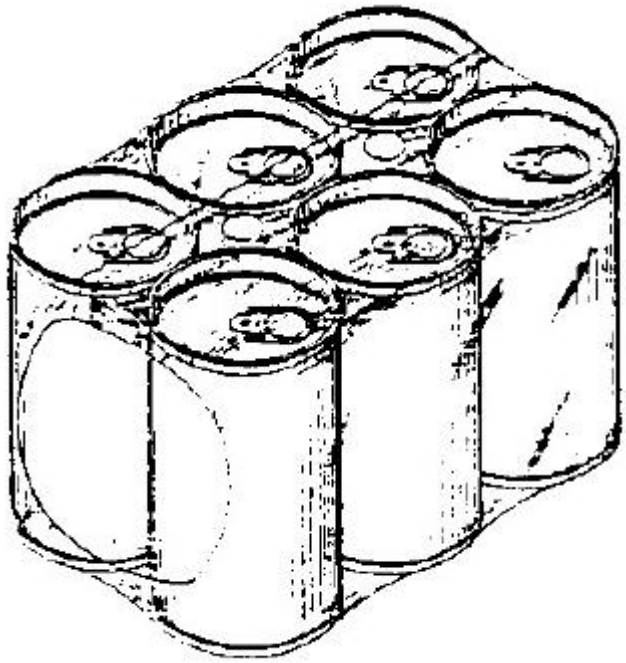

B65D 71/125

[N: not having a tubular shape]

Definition statement

This subclass/group covers:
Illustrative example of subject matter classified in this group:

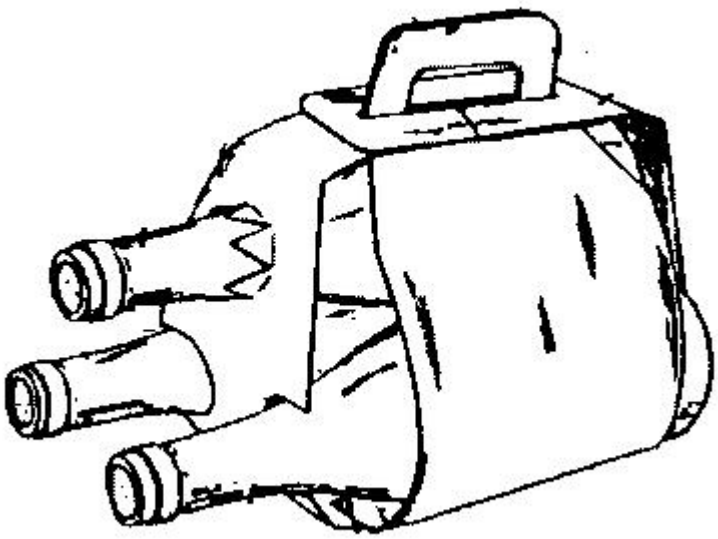

Special rules of classification within this group

The use of available Indexing Codes is mandatory.

B65D 71/16

with article-locating elements

Definition statement

This subclass/group covers:
Illustrative example of subject matter classified in this group:

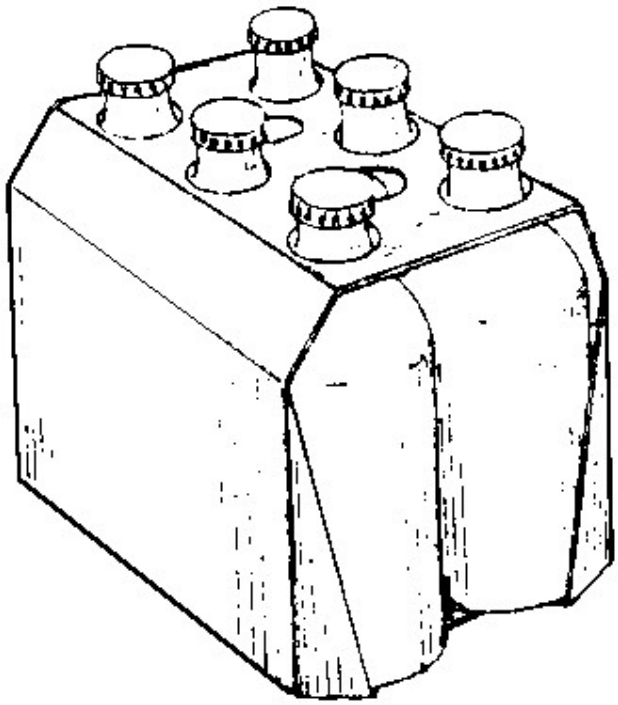

Informative references

Attention is drawn to the following places, which may be of interest for search:

Tabs or other projections for locating contents	B65D 65/24

Special rules of classification within this group

The use of available Indexing Codes is mandatory.

B65D 71/18

Tabs inwardly folded tabs from the upper or lower wall

Definition statement

This subclass/group covers:
Illustrative example of subject matter classified in this group:

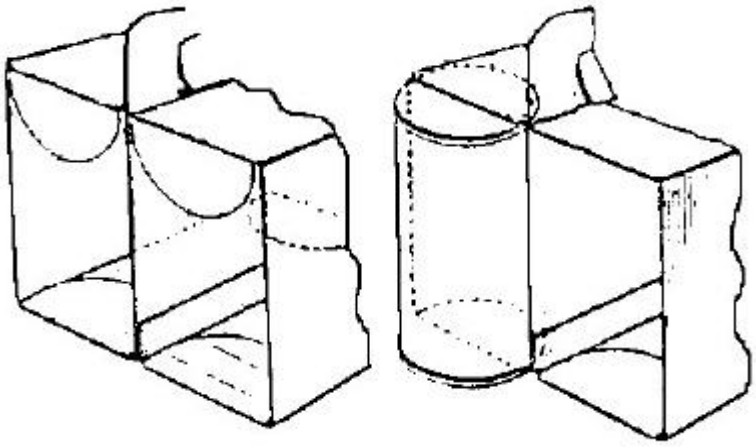

Special rules of classification within this group

The use of available Indexing Codes is mandatory.

B65D 71/20

Slits or openings along the fold line of the tubular body

Definition statement

This subclass/group covers:
Illustrative example of subject matter classified in this group:

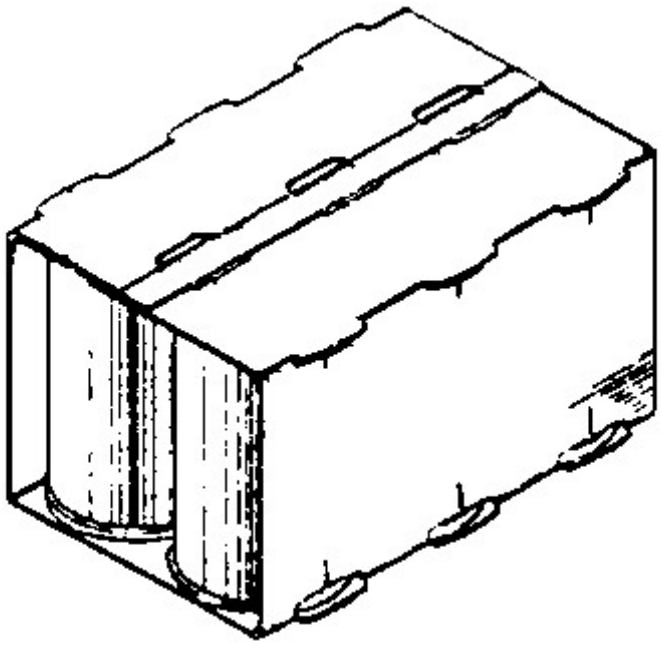

Special rules of classification within this group

The use of available Indexing Codes is mandatory.

B65D 71/22

Openings or windows formed in the side walls

Definition statement

This subclass/group covers:

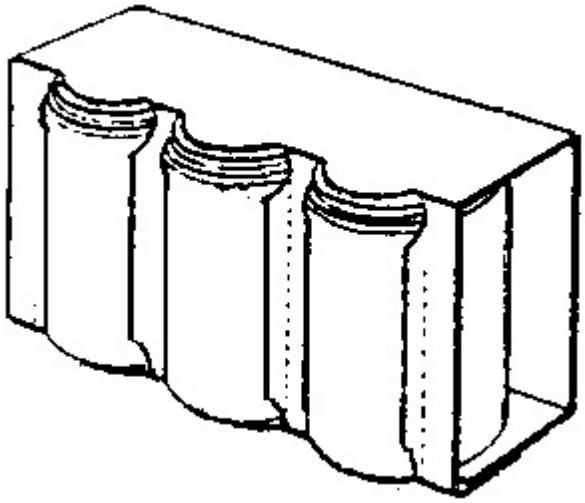

Special rules of classification within this group

The use of available Indexing Codes is mandatory.

B65D 71/243

[N: extending from the side walls]

Definition statement

This subclass/group covers:

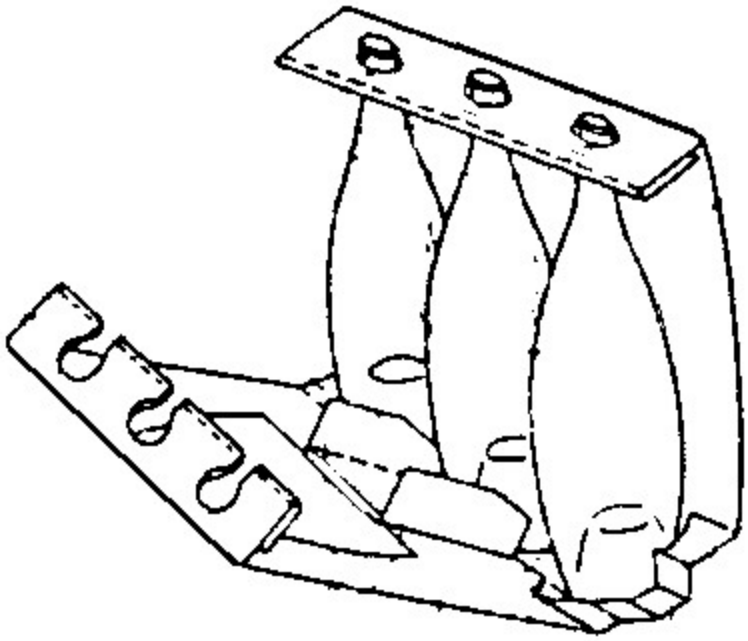

Special rules of classification within this group

The use of available Indexing Codes is mandatory.

B65D 71/246

[N: Inserted partitions]

Definition statement

This subclass/group covers:
Illustrative example of subject matter classified in this group:

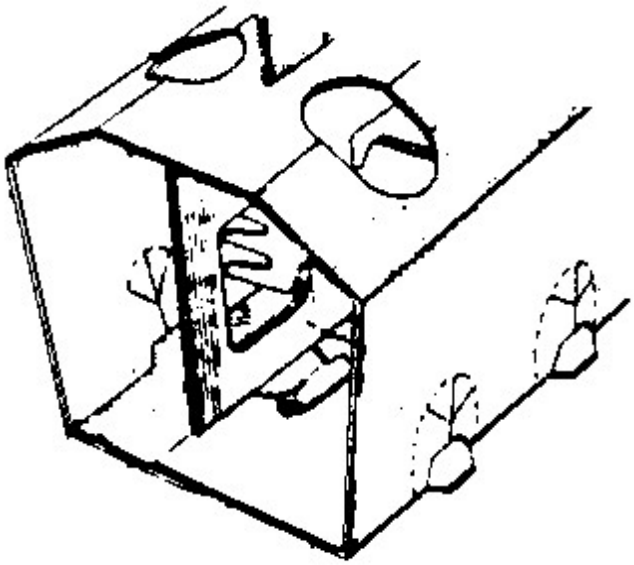

Special rules of classification within this group

The use of available Indexing Codes is mandatory.

B65D 71/26

extending from the upper or lower wall

Definition statement

This subclass/group covers:
Illustrative example of subject matter classified in this group:

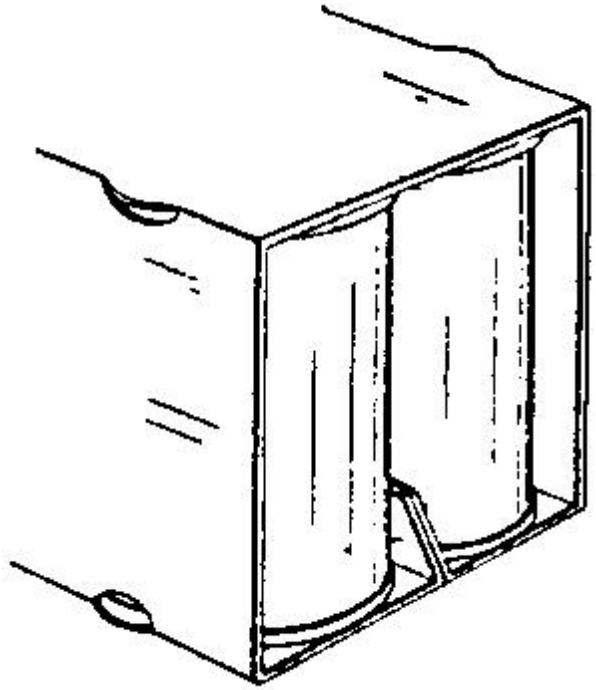

Special rules of classification within this group

The use of available Indexing Codes is mandatory.

B65D 71/285

[N: Separately-attached handles]

Definition statement

This subclass/group covers:
Illustrative example of subject matter classified in this group:

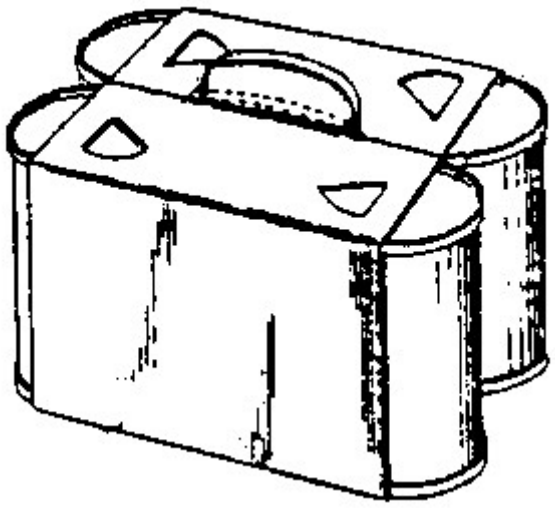

Special rules of classification within this group

The use of available Indexing Codes is mandatory.

B65D 71/30

unitary [N: i.e. integral] with the tubular packaging elements

Definition statement

This subclass/group covers:
Illustrative example of subject matter classified in this group:

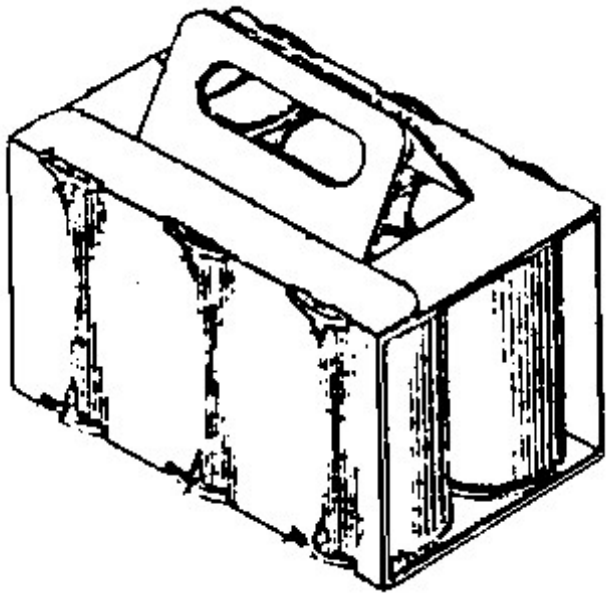

Informative references

Attention is drawn to the following places, which may be of interest for search:

With walls wrapping around a great part of the articles	B65D 71/0048

Special rules of classification within this group

The use of available Indexing Codes is mandatory.

B65D 71/32

formed by finger-holes

Definition statement

This subclass/group covers:
Illustrative example of subject matter classified in this group:

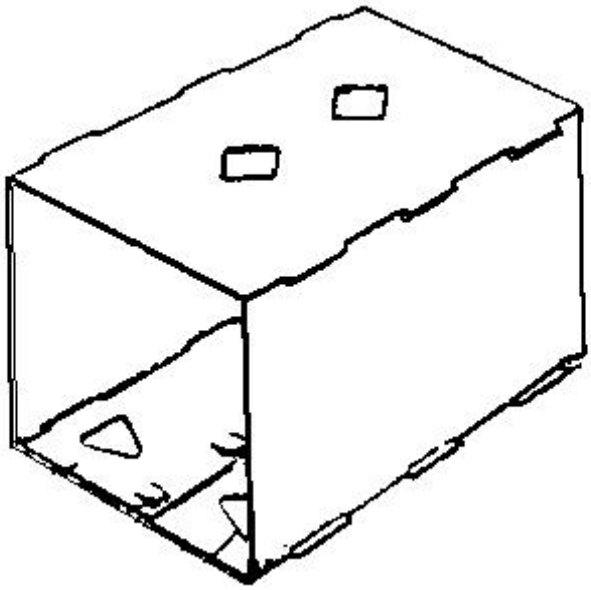

Special rules of classification within this group

The use of available Indexing Codes is mandatory.

B65D 71/34

characterised by [N: weakened lines or other opening devices]

Definition statement

This subclass/group covers:
Illustrative example of subject matter classified in this group:

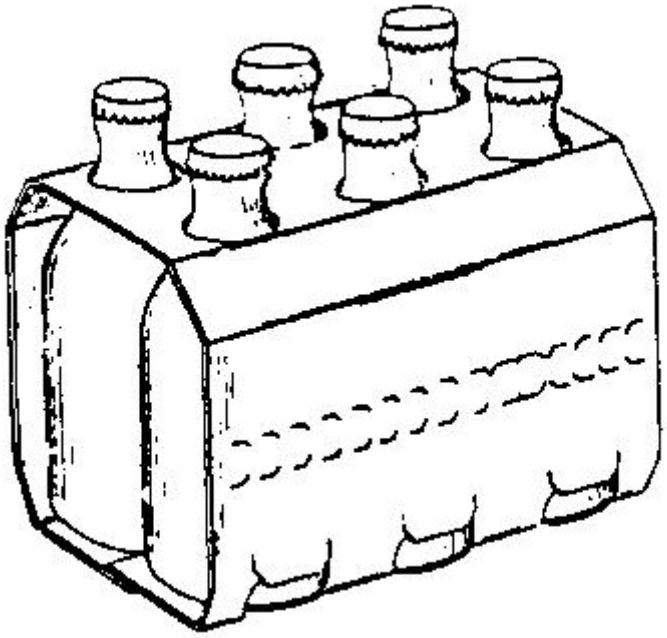

Special rules of classification within this group

The use of available Indexing Codes is mandatory.

B65D 71/36

[N: having a tubular shape, e.g. tubular wrappers, with] end walls

Definition statement

This subclass/group covers:

Illustrative example of subject matter classified in this group:

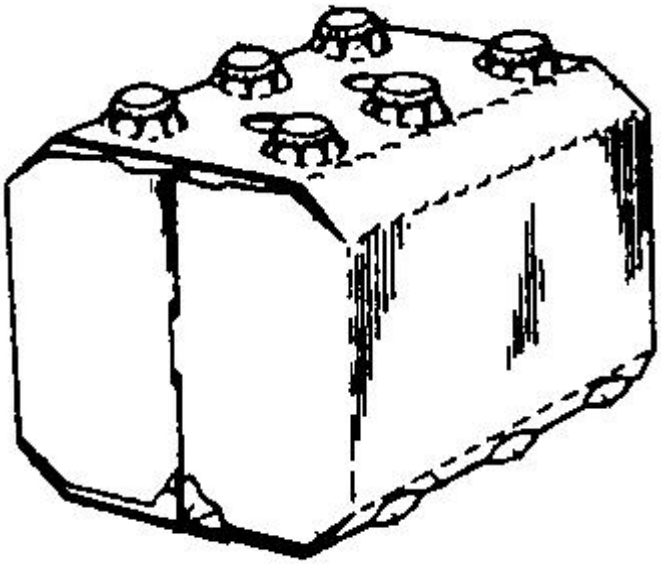

Special rules of classification within this group

The use of available Indexing Codes is mandatory.

B65D 71/38

the packaging elements [N: e.g. wrappers] being formed by folding and interconnecting two or more blanks

Definition statement

This subclass/group covers:

Illustrative example of subject matter classified in this group:

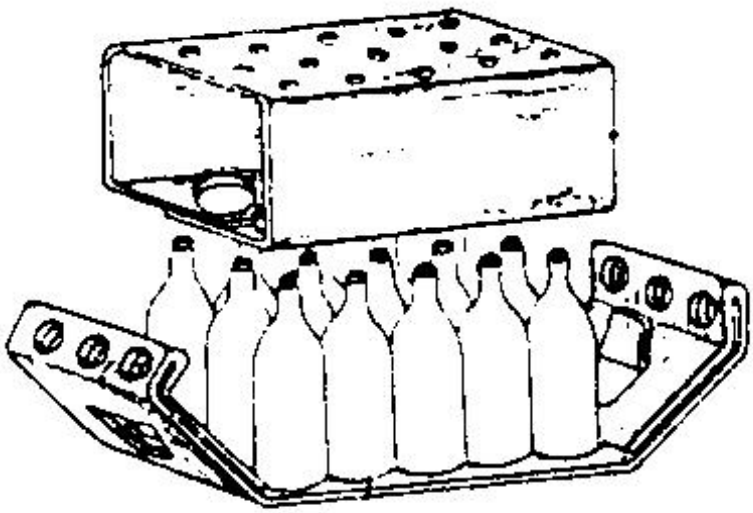

Special rules of classification within this group

The use of available Indexing Codes is mandatory.

B65D 71/40

comprising a plurality of articles held together only partially by packaging elements formed by folding a blank [N: or several blanks]

References relevant to classification in this group

This subclass/group does not cover:

Packages comprising articles attached to cards, sheets, or webs combined with a preformed enclosure	B65D 73/0092

B65D 71/403

[N: formed by folding several blanks]

Definition statement

This subclass/group covers:

Illustrative example of subject matter classified in this group:

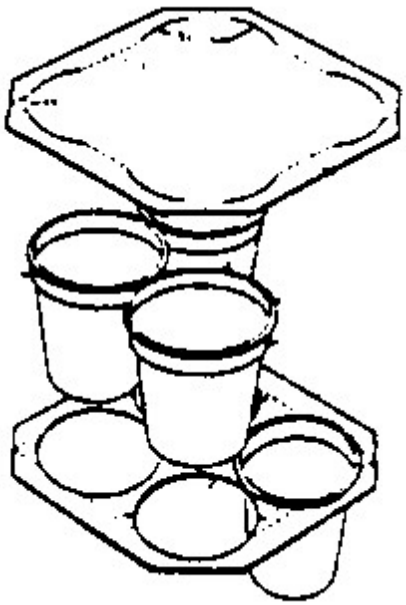

B65D 71/42

formed by folding a single blank into a single layer element

Definition statement

This subclass/group covers:
Illustrative example of subject matter classified in this group:

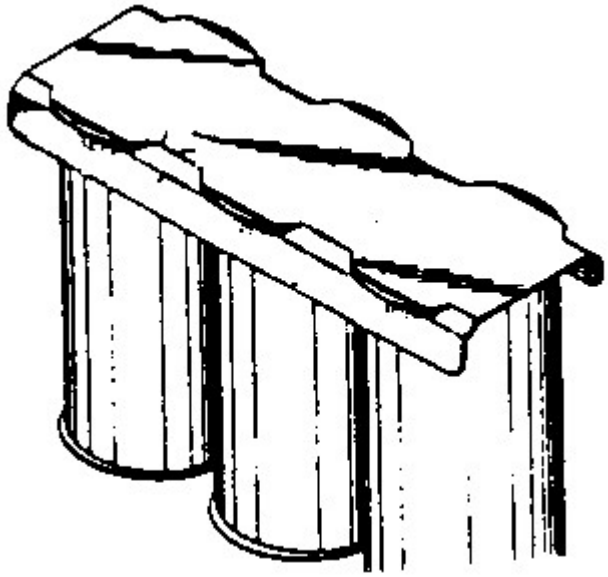

B65D 71/44

characterised by the handle

Definition statement

This subclass/group covers:
Illustrative example of subject matter classified in this group:

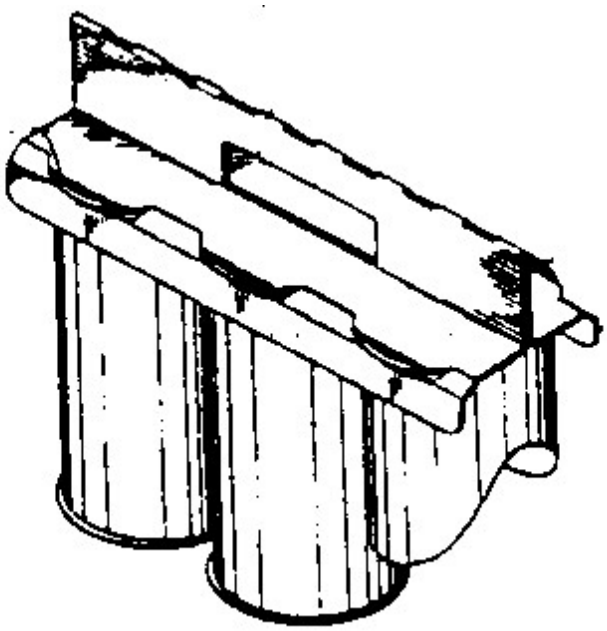

References relevant to classification in this group

This subclass/group does not cover:

Wrappers fixed only by adhesives	B65D 71/0085

B65D 71/46

formed by folding a single blank into a tubular element

Definition statement

This subclass/group covers:

Illustrative example of subject matter classified in this group:

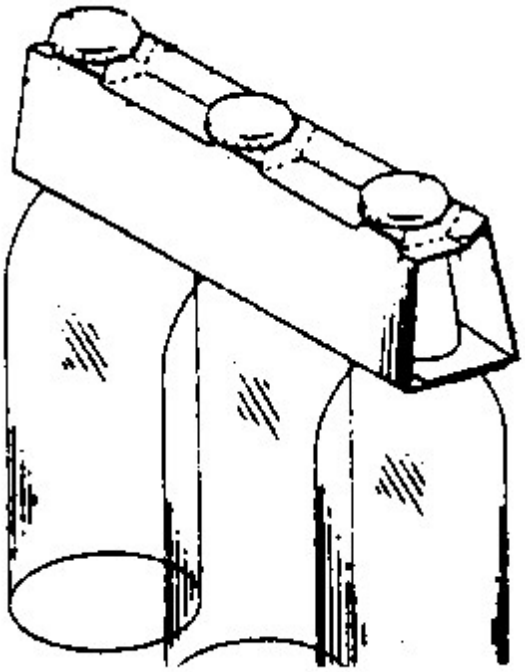

B65D 71/48

characterised by the handle

Definition statement

This subclass/group covers:
Illustrative example of subject matter classified in this group:

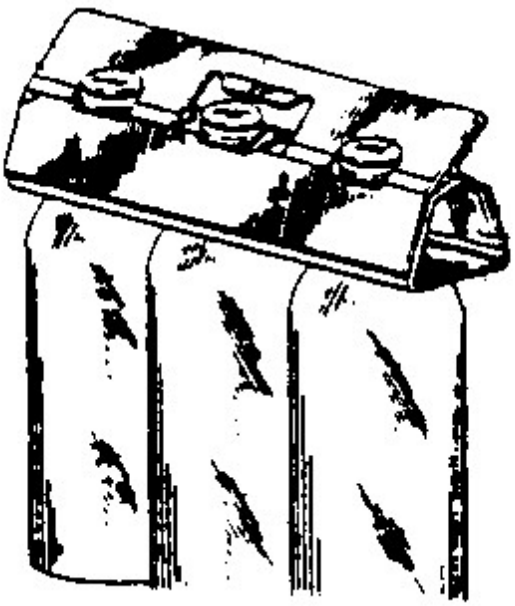

B65D 71/50

comprising a plurality of articles held together only partially by packaging elements formed otherwise than by folding a blank

Definition statement

This subclass/group covers:

Illustrative example of subject matter classified in this group:

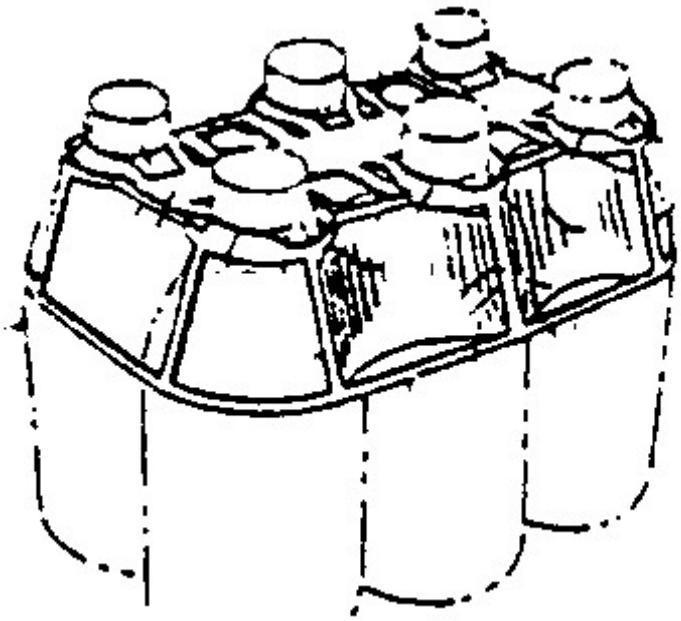

References relevant to classification in this group

This subclass/group does not cover:

Connectors or clips for coaxial and parallel connection	B65D 67/02
Packaging elements adhered to the articles	B65D 71/0085
Flexible binders	B65D 71/02
Trays	B65D 71/70
Releasable fastenings clips	F16B 2/20

Informative references

Attention is drawn to the following places, which may be of interest for search:

Articles partially enclosed in folded or wound strips or sheets, e.g. wrapped newspapers	B65D 75/02

B65D 71/502

[N: Coaxial connections]

Definition statement

This subclass/group covers:

Illustrative example of subject matter classified in this group:

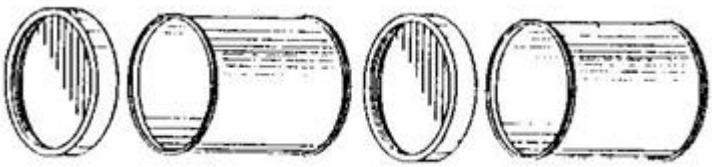

References relevant to classification in this group

This subclass/group does not cover:

Connectors or clips for coaxial and parallel connection	B65D 67/02
Coaxial connectors made by folding a blank	B65D 71/40
Releasable fastenings clips	F16B 2/20

Informative references

Attention is drawn to the following places, which may be of interest for search:

Auxiliary removable stacking elements other than covers	B65D 21/0224
Separate rigid or semi-rigid containers joined to each other at their external surfaces	B65D 81/3205

B65D 71/504

[N: the element being formed from a flexible sheet provided with slits or apertures intended to be stretched over the articles and adapt to the shape of the article]

Definition statement

This subclass/group covers:

Illustrative example of subject matter classified in this group:

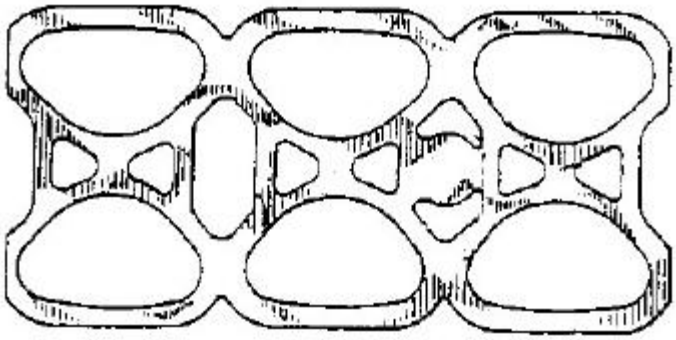

References relevant to classification in this group

This subclass/group does not cover:

Joining articles, e.g. cans, using a top carrier element	B65B 17/025

B65D 71/506

[N: and provided with an additional element encircling the periphery of the group of articles]

Definition statement

This subclass/group covers:

Illustrative example of subject matter classified in this group:

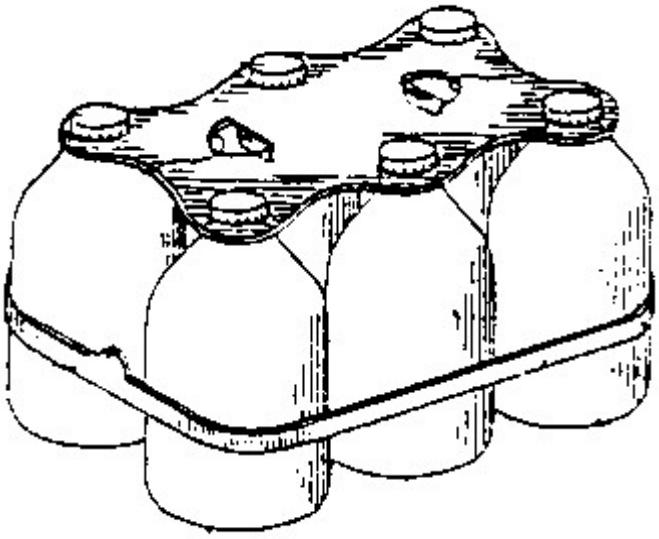

B65D 71/508

[N: the elements being formed by one or more films or similar, e.g. nets]

Definition statement

This subclass/group covers:

Illustrative example of subject matter classified in this group:

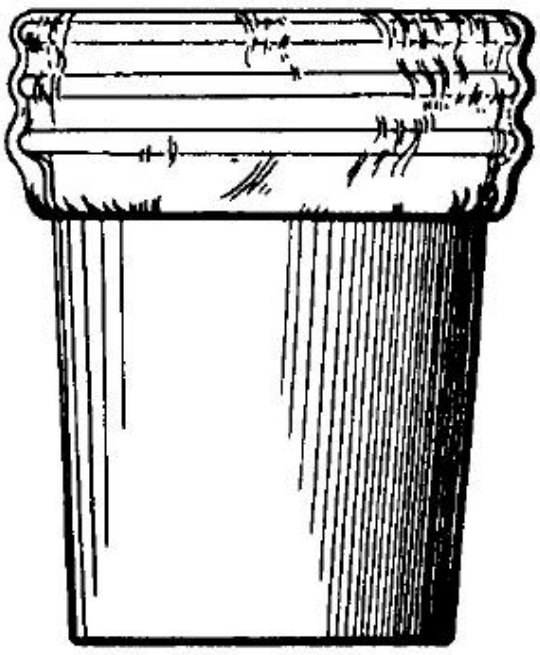

B65D 71/70

Trays provided with projections or recesses in order to assemble multiple articles, e.g. intermediate elements for stacking

Definition statement

This subclass/group covers:

Illustrative example of subject matter classified in this group:

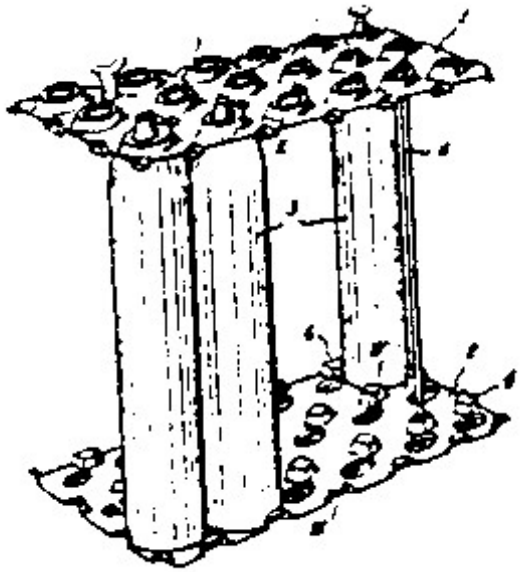

References relevant to classification in this group

This subclass/group does not cover:

Stack holders or separators	B65G 1/14

B65D 71/72

formed by folding one or more blanks, the articles being inserted in openings in a wall [N: (trays with apertures located within an external paper container B65D 5/5038)]

Definition statement

This subclass/group covers:

Illustrative example of subject matter classified in this group:

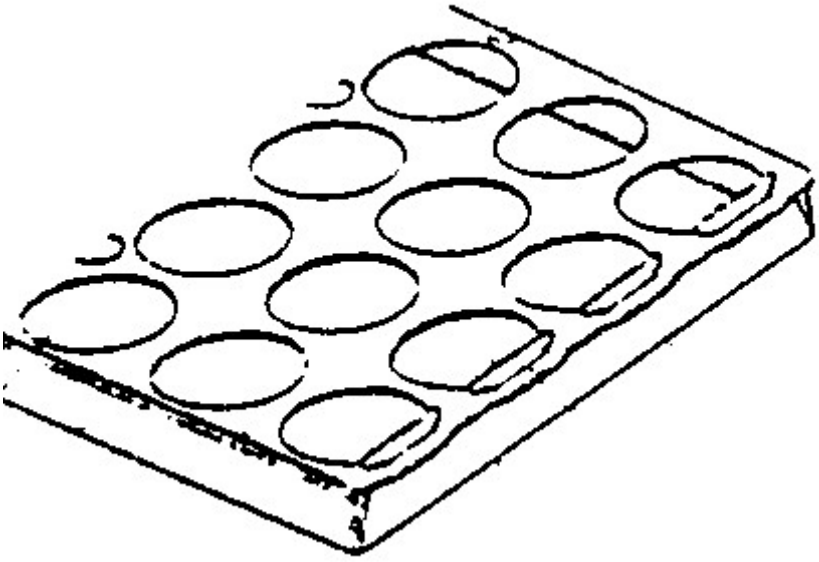

Informative references

Attention is drawn to the following places, which may be of interest for search:

Tray-like elements formed by folding a blank and presenting openings or recesses	B65D 5/5038
Devices, e.g. plates, presenting apertures through which the articles project	B65D 25/108

B65D 73/00

Packages comprising articles attached to cards, sheets, or webs ([N: B65D 85/18 takes precedence]; cards for buttons, collar-studs, or sleeve-links A44B 7/00; attaching articles to cards, sheets, or webs B65B 15/00)

References relevant to classification in this group

This subclass/group does not cover:

Skin packages	B65D 75/305
Containers, packaging elements or packages specially adapted for wearing apparel	B65D 85/18

B65D 73/0007

[N: the articles being attached to the plane surface of a single card (B65D 75/30 takes precedence)]

References relevant to classification in this group

This subclass/group does not cover:

Articles or materials enclosed between two opposed sheets or blanks having their margins united, e.g. by pressure-sensitive adhesive, crimping, heat-sealing, or welding	B65D 75/30

Informative references

Attention is drawn to the following places, which may be of interest for search:

The articles being supported by or suspended from a tag-like element (hangers for wearing apparel)	B65D 73/0064

B65D 73/0014

[N: by means of separate fixing elements, e.g. clips, clamps, bands]

Definition statement

This subclass/group covers:

Illustrative example of subject matter classified in this group:

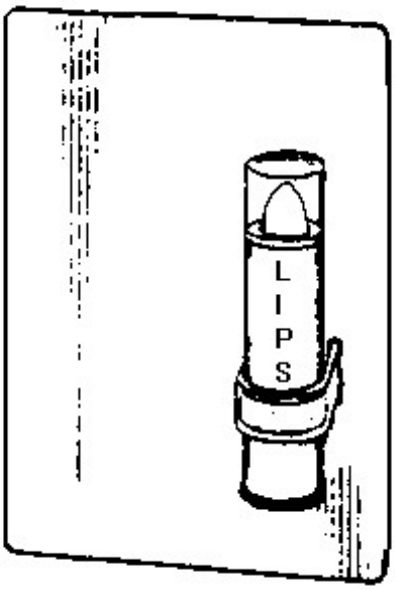

References relevant to classification in this group

This subclass/group does not cover:

Releasable fastenings clips	F16B 2/20

B65D 73/0021

[N: by means of cut-out or marginal tabs, tongues or flaps]

Definition statement

This subclass/group covers:
Illustrative example of subject matter classified in this group:

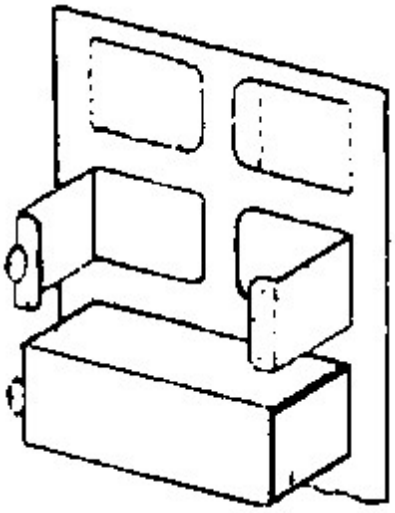

B65D 73/0028

[N: by means of adhesive, heat-seal or the like]

Definition statement

This subclass/group covers:
Illustrative example of subject matter classified in this group:

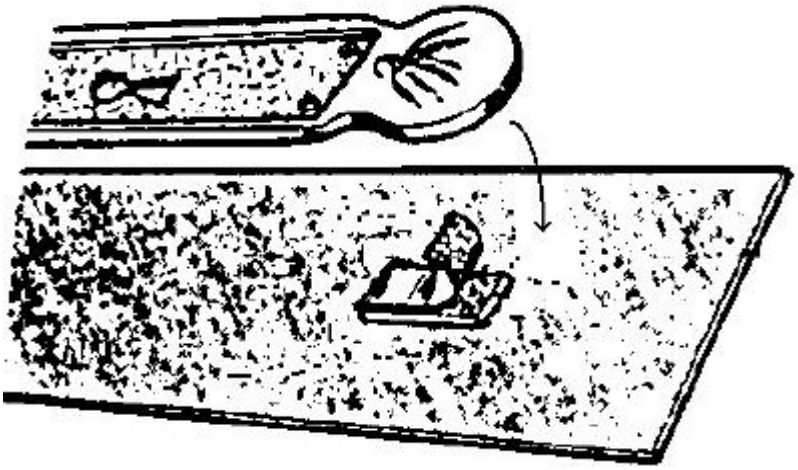

B65D 73/0035

[N: the articles being retained within a recess or a series of recesses provided in a single card (B65D 75/32 takes precedence)]

Definition statement

This subclass/group covers:
Illustrative example of subject matter classified in this group:

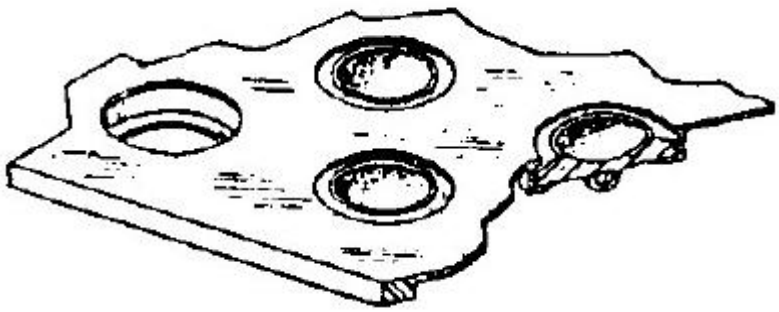

References relevant to classification in this group

This subclass/group does not cover:

Button-cards	A44B 7/00
Articles or materials enclosed between two opposed sheets or blanks having their margins united, one or both sheets or blanks being recessed to accommodate contents	B65D 75/32

B65D 73/0042

[N: the articles being retained within a window, hole or other cut-out portion of a single card]

Informative references

Attention is drawn to the following places, which may be of interest for search:

Within a window, hole or cut-out portion	B65D 73/0085

B65D 73/005

[N: by means of separate fixing elements, e.g. clips, clamps, bands]

Definition statement

This subclass/group covers:

Illustrative example of subject matter classified in this group:

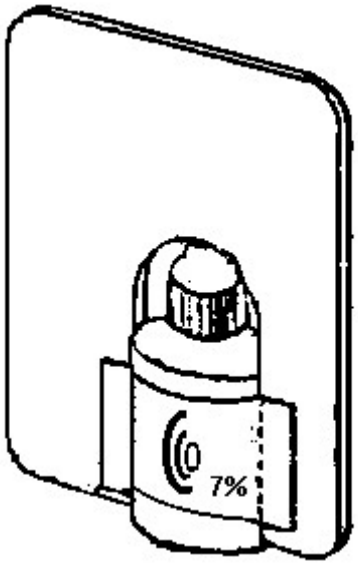

References relevant to classification in this group

This subclass/group does not cover:

Releasable fastenings clips	F16B 2/20

B65D 73/0057

[N: by means of a preformed enclosure, e.g. a bulb]

Definition statement

This subclass/group covers:
Illustrative example of subject matter classified in this group:

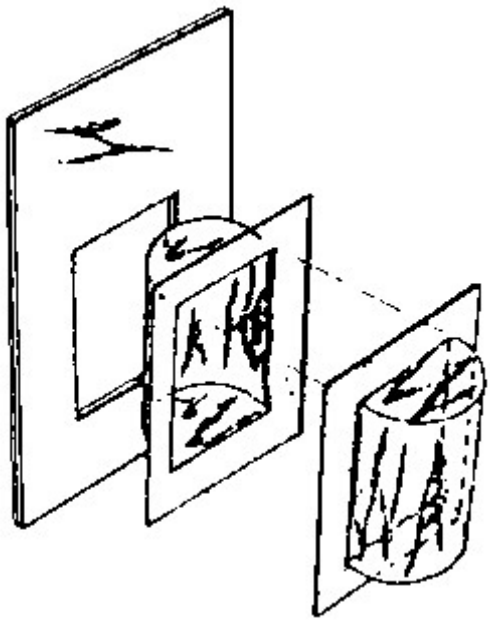

B65D 73/0064

[N: the articles being supported by or suspended from a tag-like element (hangers for wearing apparel A47G 25/00)]

Definition statement

This subclass/group covers:

Illustrative example of subject matter classified in this group:

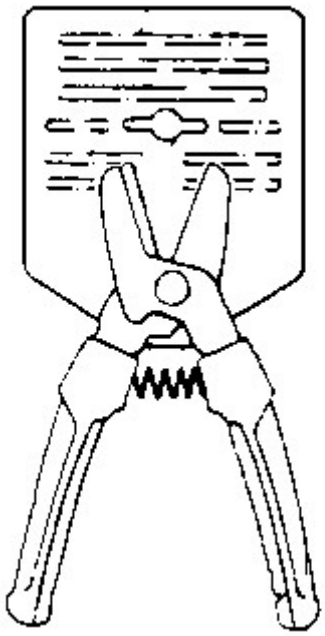

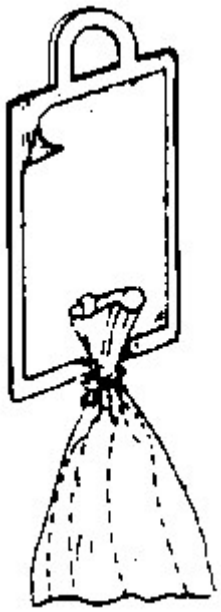

Informative references

Attention is drawn to the following places, which may be of interest for search:

Hangers for hanging articles on bars, tringles, bracket arms or the like	A47F 5/0006
The articles being attached to the plane surface of a single card	B65D 73/0007

B65D 73/0071

[N: the tag-like element being doubled-over to engage the upper part of the article]

Definition statement

This subclass/group covers:

Illustrative example of subject matter classified in this group:

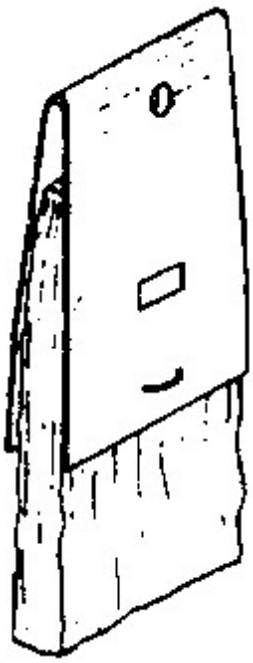

Special rules of classification within this group

The use of available Indexing Codes is mandatory.

B65D 73/0085

[N: within a window, hole or cut-out portion]

Definition statement

This subclass/group covers:
Illustrative example of subject matter classified in this group:

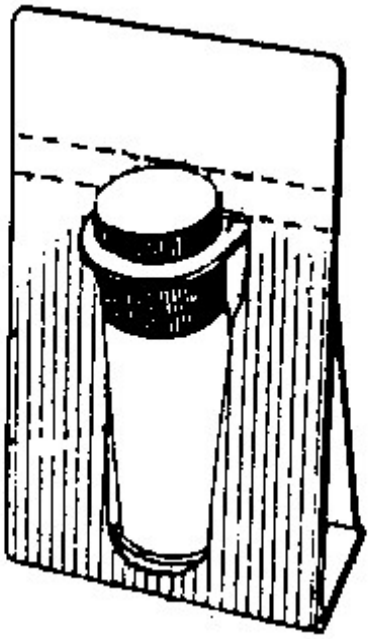

B65D 73/0092

[N: combined with a preformed enclosure, e.g. a bulb]

Definition statement

This subclass/group covers:
Illustrative example of subject matter classified in this group:

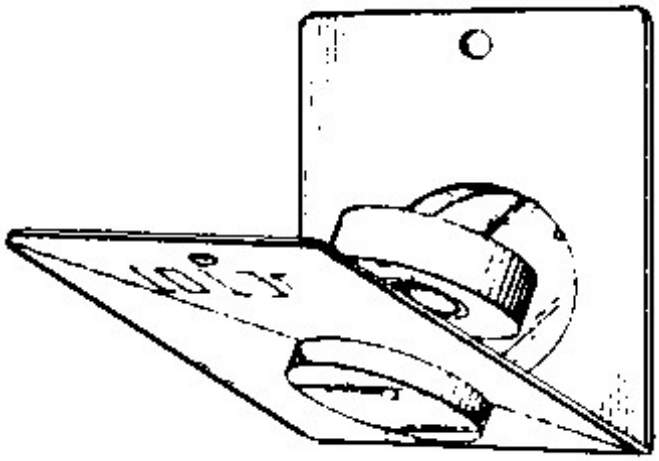

B65D 73/02

Articles, e.g. small electrical components, attached to webs

Definition statement

This subclass/group covers:

Illustrative example of subject matter classified in this group:

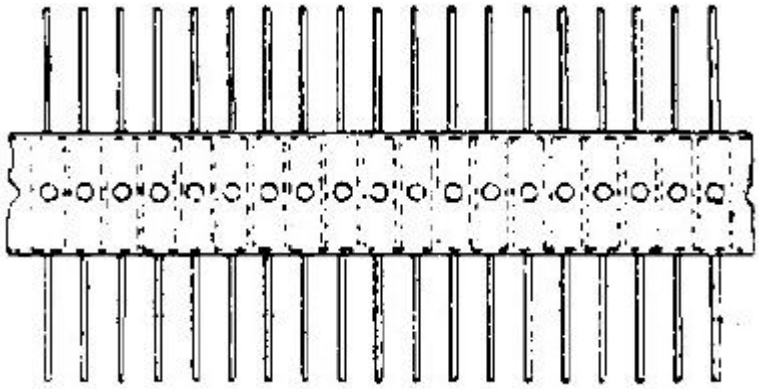

References relevant to classification in this group

This subclass/group does not cover:

Strips of nails, screws, easily separable	F16B 15/00, F16B 27/00

Informative references

Attention is drawn to the following places, which may be of interest for search:

Attaching a series of articles, e.g. small electrical components, to a continuous web	B65B 15/04
Placing of electric components on belts holding the terminals	H05K 13/003

B65D 75/00

Packages comprising articles or materials partially or wholly enclosed in strips, sheets, blanks, tubes, or webs of flexible sheet material, e.g. in folded wrappers (B65D 71/00 takes precedence; wrapping B65B 11/00)

References relevant to classification in this group

This subclass/group does not cover:

Holders or wrappers as eating aids for fast food, e.g. hamburgers	A47G 21/001

Special rules of classification within this group

The use of available Indexing Codes is mandatory.

B65D 75/002

[N: in shrink films (B65D71/00CA5B takes precedence)]

Definition statement

This subclass/group covers:

Illustrative example of subject matter classified in this group:

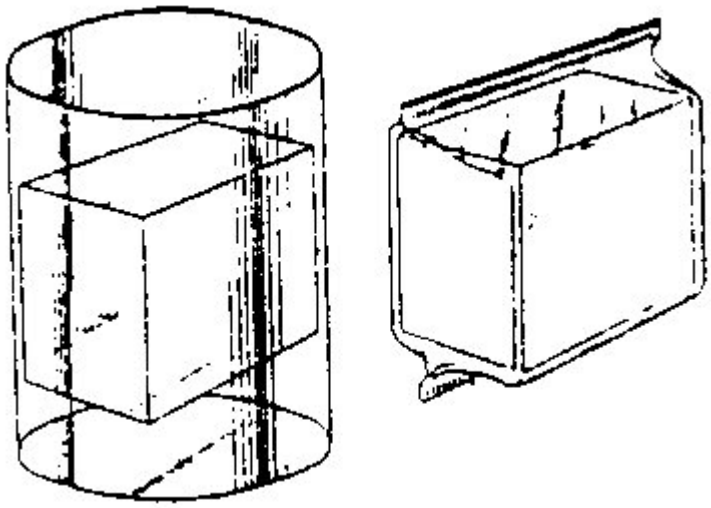

References relevant to classification in this group

This subclass/group does not cover:

Laminates	B32B
Coverings for bottles	B65D 23/0878
Composition of the film	C08J
Labels to be fastened or secured by the material of the label itself, e.g. by thermo-adhesion	G09F 3/04

Informative references

Attention is drawn to the following places, which may be of interest for search:

Packaging elements holding or encircling completely or almost completely the bundle of articles, e.g. wrappers	B65D 71/06
Wrappers shrunk by heat	B65D 71/08

Special rules of classification within this group

The use of available Indexing Codes is mandatory.

B65D71/00CA5B does not exist!

B65D 75/004

[N: with auxiliary packaging elements, e.g. protective pads or frames, trays]

Informative references

Attention is drawn to the following places, which may be of interest for search:

Wrappers formed by one or more films or the like and provided with inserts	B65D 71/066
Wrappers shrunk by heat and provided with inserts	B65D 71/10

Special rules of classification within this group

The use of available Indexing Codes is mandatory.

B65D 75/006

[N: in stretch films]

References relevant to classification in this group

This subclass/group does not cover:

Laminates	B32B
Coverings for bottles	B65D 23/0878
Composition of the film	C08J
Labels to be fastened or secured by the material of the label itself, e.g. by thermo-adhesion	G09F 3/04

Informative references

Attention is drawn to the following places, which may be of interest for search:

Packaging elements holding or encircling completely or almost completely the bundle of articles, e.g. wrappers	B65D 71/06
Wrappers shrunk by heat	B65D 71/08

Special rules of classification within this group

The use of available Indexing Codes is mandatory.

B65D 75/008

[N: Standing pouches, i.e. "Standbeutel"]

Definition statement

This subclass/group covers:

Illustrative example of subject matter classified in this group:

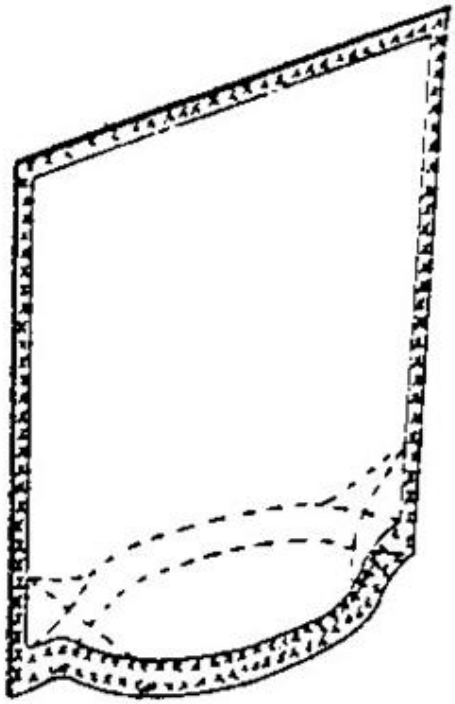

References relevant to classification in this group

This subclass/group does not cover:

Handles for standing pouches	B65D 33/06, B65D 75/56
Contents removing means for standing pouches	B65D 75/58

Informative references

Attention is drawn to the following places, which may be of interest for search:

Bags or like containers made of paper and having structural provision for thickness of contents with rigid end walls	B65D 31/06

Special rules of classification within this group

The use of available Indexing Codes is mandatory.

B65D 75/02

Articles partially enclosed in folded or wound strips or sheets, e.g. wrapped newspapers

Definition statement

This subclass/group covers:

Illustrative example of subject matter classified in this group:

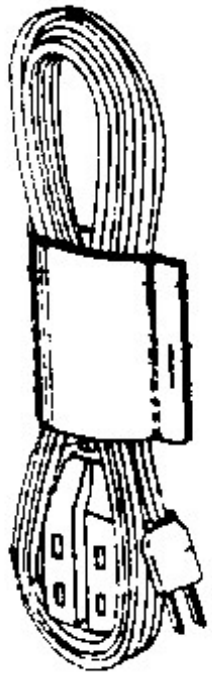

References relevant to classification in this group

This subclass/group does not cover:

Comprising a plurality of articles held together only partially by packaging elements formed otherwise than by folding a blank	B65D 71/50

Special rules of classification within this group

The use of available Indexing Codes is mandatory.

B65D 75/08

with the ends of the tube closed by folding

Definition statement

This subclass/group covers:
Illustrative example of subject matter classified in this group:

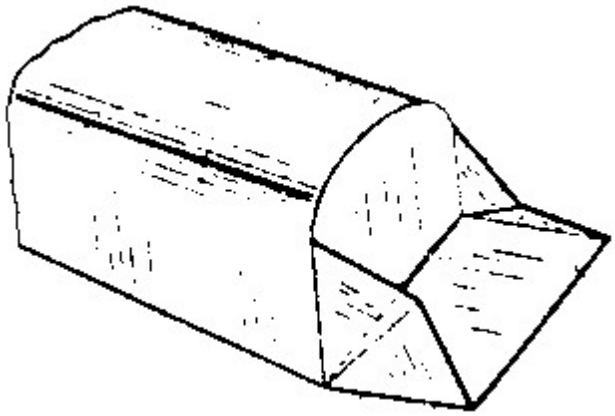

Special rules of classification within this group

The use of available Indexing Codes is mandatory.

B65D 75/10

with the ends of the tube closed by twisting

Definition statement

This subclass/group covers:
Illustrative example of subject matter classified in this group:

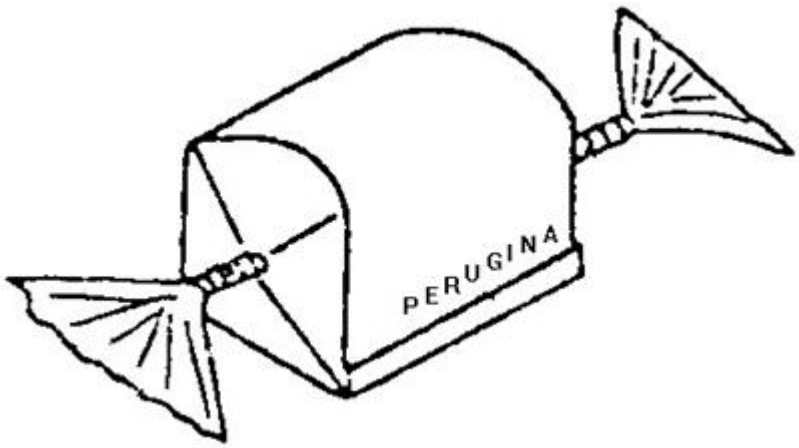

Special rules of classification within this group

The use of available Indexing Codes is mandatory.

B65D 75/12

with the ends of the tube closed by flattening and heat-sealing

Definition statement

This subclass/group covers:
Illustrative example of subject matter classified in this group:

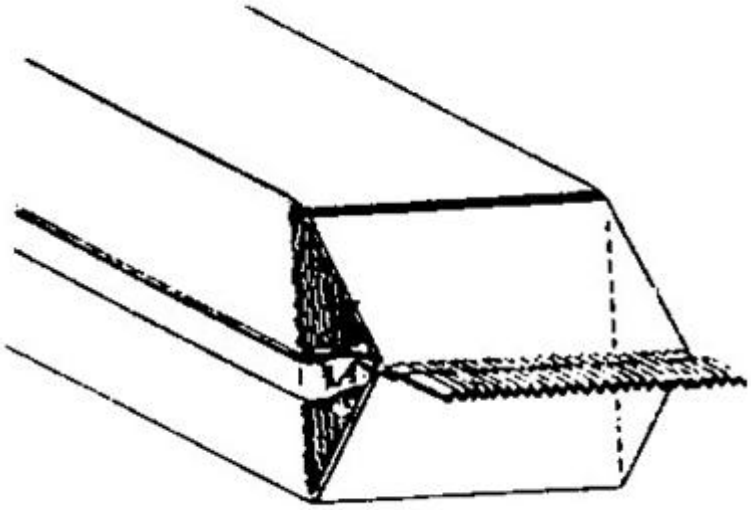

Special rules of classification within this group

The use of available Indexing Codes is mandatory.

B65D 75/14

in sheets or blanks folded-up around all sides of the contents from a portion on which the contents are placed

Definition statement

This subclass/group covers:
Illustrative example of subject matter classified in this group:

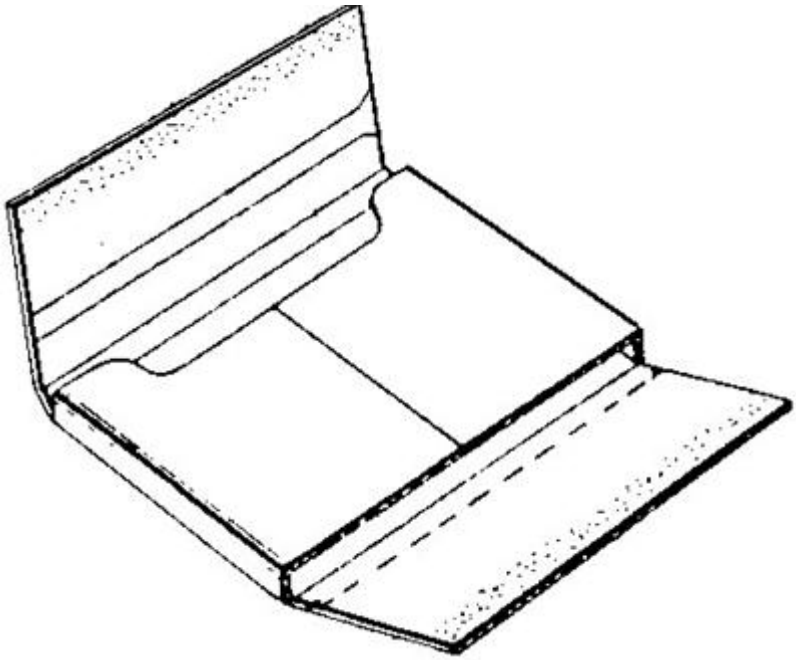

Informative references

Attention is drawn to the following places, which may be of interest for search:

Containers of polygonal cross-section characterised by integral closure-flaps	B65D 5/2052

Special rules of classification within this group

The use of available Indexing Codes is mandatory.

B65D 75/16

the upstanding portion of the wrapper being closed by twisting

Definition statement

This subclass/group covers:

Illustrative example of subject matter classified in this group:

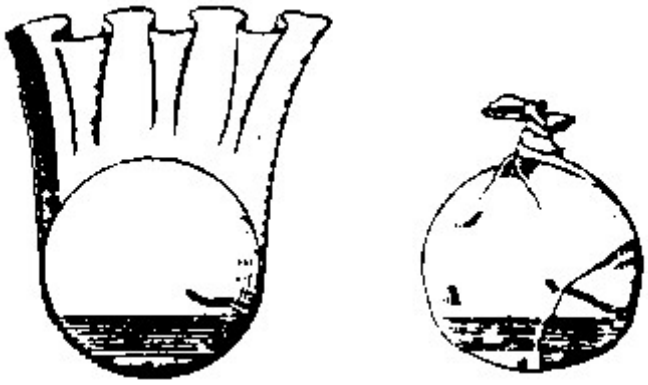

Special rules of classification within this group

The use of available Indexing Codes is mandatory.

B65D 75/18

the upstanding portion of the wrapper being closed by regular or irregular folds or pleats, e.g. bunch-wrapped packages

Definition statement

This subclass/group covers:
Illustrative example of subject matter classified in this group:

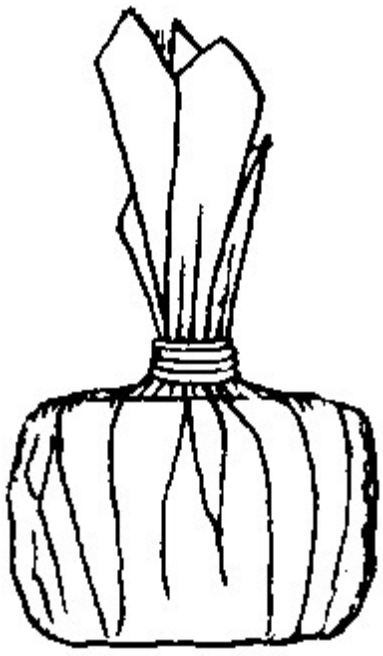

Special rules of classification within this group

The use of available Indexing Codes is mandatory.

B65D 75/20

in sheets or blanks doubled around contents and having their opposed free margins united, e.g. by pressure-sensitive adhesive, crimping, heat-sealing, or welding

Definition statement

This subclass/group covers:

Illustrative example of subject matter classified in this group:

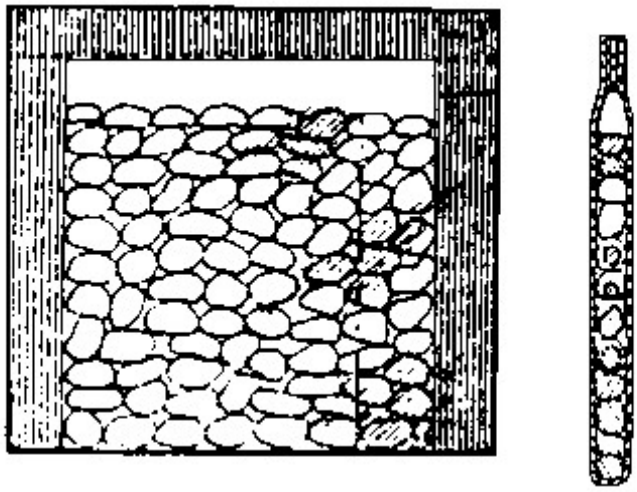

References relevant to classification in this group

This subclass/group does not cover:

Records	B65D 85/546

Special rules of classification within this group

The use of available Indexing Codes is mandatory.

B65D 75/22

the sheet or blank being recessed to accommodate contents [N: (containers simulating a book B65D 77/006)]

Definition statement

This subclass/group covers:

Illustrative example of subject matter classified in this group:

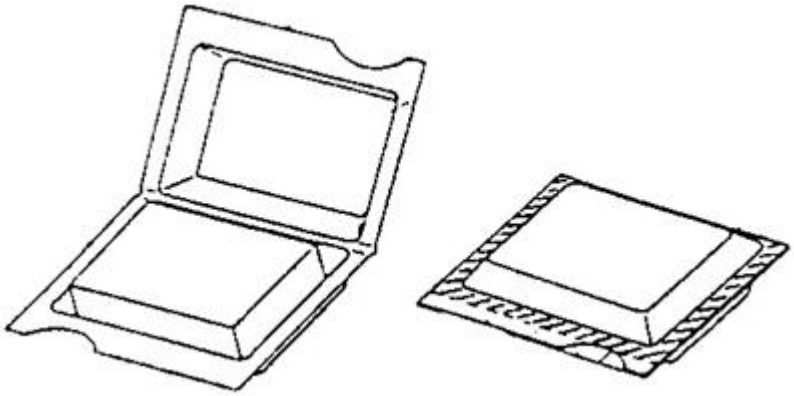

Informative references

Attention is drawn to the following places, which may be of interest for search:

Non-removable lids or covers - the container, the lid and the hinge being made of one piece	B65D 43/162

Special rules of classification within this group

The use of available Indexing Codes is mandatory.

B65D 75/225

[N: the sheet or blank comprising more than one fold line (B65D 75/245 takes precedence)]

Definition statement

This subclass/group covers:

Illustrative example of subject matter classified in this group:

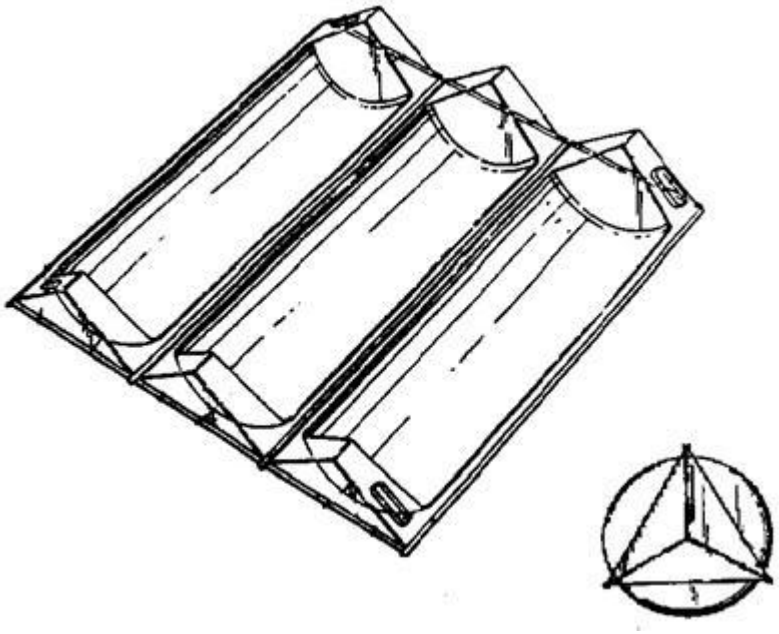

References relevant to classification in this group

This subclass/group does not cover:

And formed with several recesses to accommodate a series of articles or quantities of material	B65D 75/245

Special rules of classification within this group

The use of available Indexing Codes is mandatory.

B65D 75/24

and formed with several recesses to accommodate a series of articles or quantities of material

Definition statement

This subclass/group covers:

Illustrative example of subject matter classified in this group:

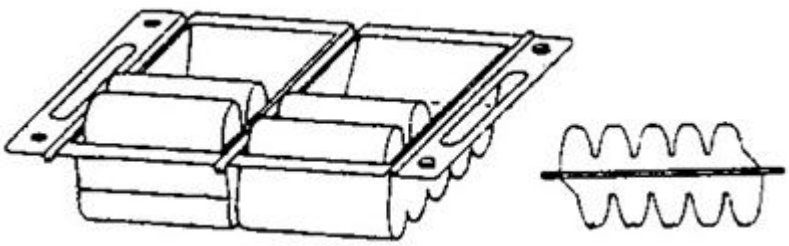

Special rules of classification within this group

The use of available Indexing Codes is mandatory.

B65D 75/245

[N: the sheet or blank comprising more than one fold line]

Definition statement

This subclass/group covers:
Illustrative example of subject matter classified in this group:

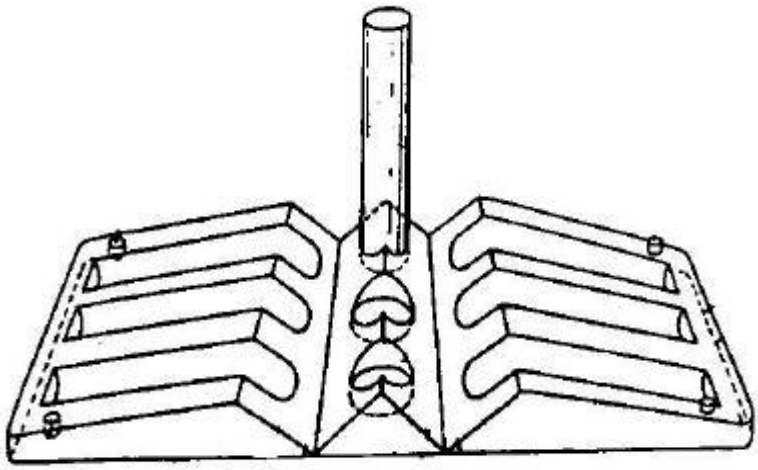

Special rules of classification within this group

The use of available Indexing Codes is mandatory.

B65D 75/26

Articles or materials wholly enclosed in laminated sheets or wrapper blanks

Definition statement

This subclass/group covers:
Illustrative example of subject matter classified in this group:

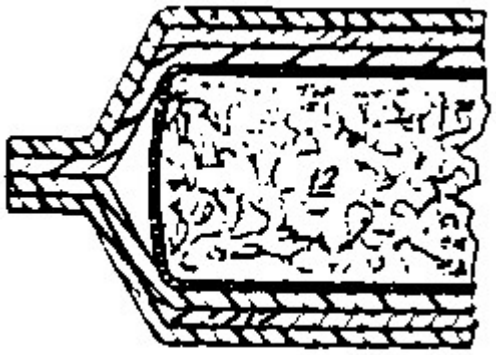

Special rules of classification within this group

The use of available Indexing Codes is mandatory.

B65D 75/28

Articles or materials wholly enclosed in composite wrappers, i.e. wrappers formed by associating or interconnecting two or more sheets or blanks

Definition statement

This subclass/group covers:

Illustrative example of subject matter classified in this group:

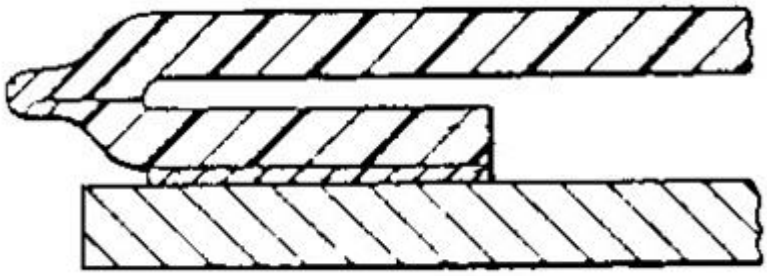

References relevant to classification in this group

This subclass/group does not cover:

Two tubular sheets, the axes thereof being arranged perpendicularly to each other	B65D 75/38
Records	B65D 85/548

Special rules of classification within this group

The use of available Indexing Codes is mandatory.

B65D 75/30

Articles or materials enclosed between two opposed sheets or blanks having their margins united, e.g. by pressure-sensitive adhesive, crimping, heat-sealing, or welding

Definition statement

This subclass/group covers:

Illustrative example of subject matter classified in this group:

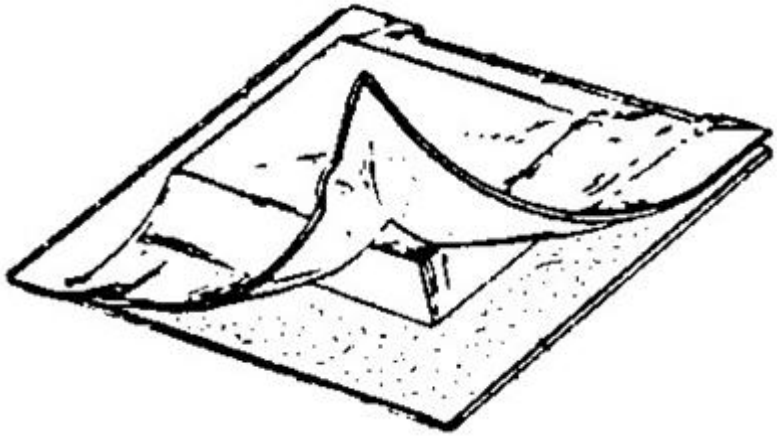

Special rules of classification within this group

The use of available Indexing Codes is mandatory.

B65D 75/305

[N: Skin packages]

Definition statement

This subclass/group covers:

Illustrative example of subject matter classified in this group:

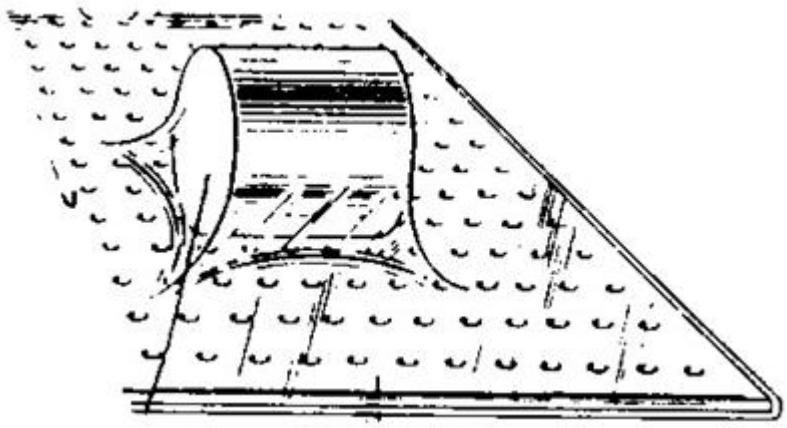

References relevant to classification in this group

This subclass/group does not cover:

Articles attached to cards by means of a preformed enclosure	B65D 73/0057, B65D 73/0092

Special rules of classification within this group

The use of available Indexing Codes is mandatory.

B65D 75/32

one or both sheets or blanks being recessed to accommodate contents

References relevant to classification in this group

This subclass/group does not cover:

Freezing trays for ice-cubes	F25C 1/243

Special rules of classification within this group

The use of available Indexing Codes is mandatory.

B65D 75/322

[N: and forming one compartment]

Definition statement

This subclass/group covers:
Illustrative example of subject matter classified in this group:

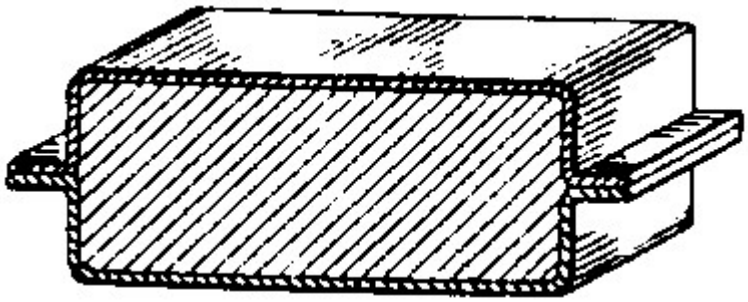

Special rules of classification within this group

The use of available Indexing Codes is mandatory.

B65D 75/323

[N: and forming several compartments]

Definition statement

This subclass/group covers:
Illustrative example of subject matter classified in this group:

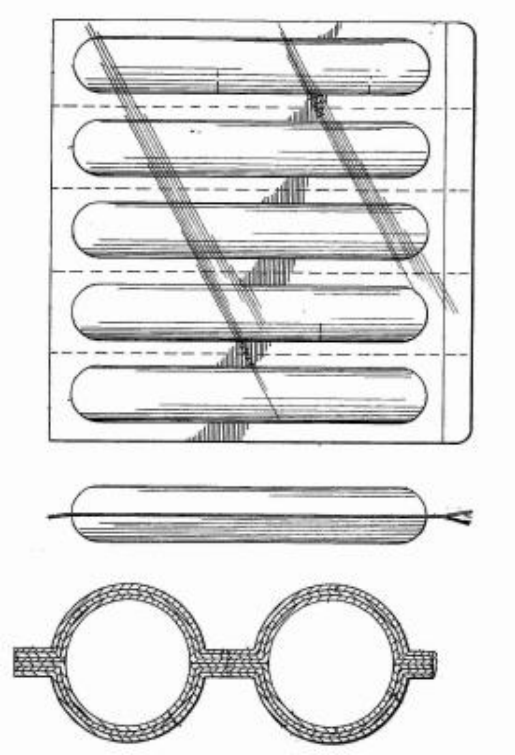

References relevant to classification in this group

This subclass/group does not cover:

Blister-type containers for medical or pharmaceutical purposes	A61J 1/035
Tools for removing pills or other small items out of blister packs	B65B 69/00

Informative references

Attention is drawn to the following places, which may be of interest for search:

Thermoformed trays or the like with a plurality of recesses for different materials located in different recesses	B65D 81/3294

Special rules of classification within this group

The use of available Indexing Codes is mandatory.

B65D 75/324

[N: the compartments being interconnected, e.g. by small channels]

Definition statement

This subclass/group covers:

Illustrative example of subject matter classified in this group:

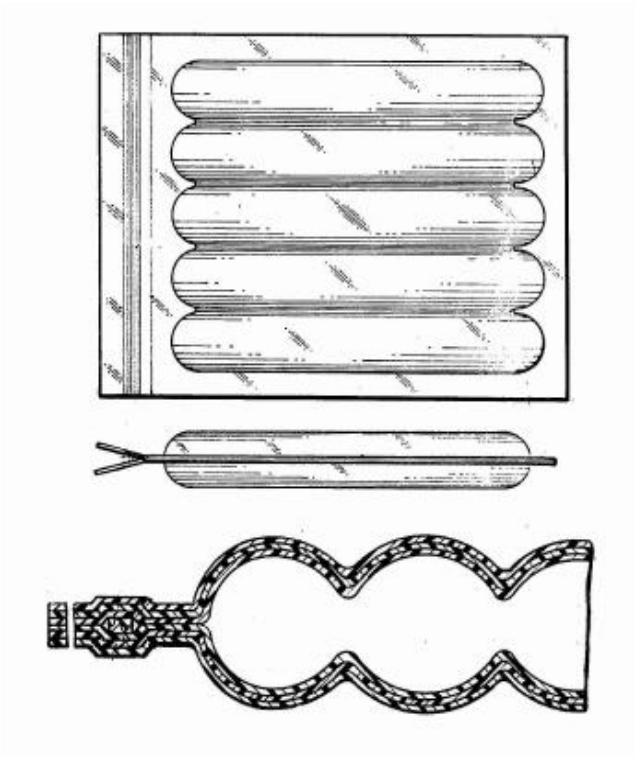

Special rules of classification within this group

The use of available Indexing Codes is mandatory.

B65D 75/326

[N: and forming one compartment]

Definition statement

This subclass/group covers:
Illustrative example of subject matter classified in this group:

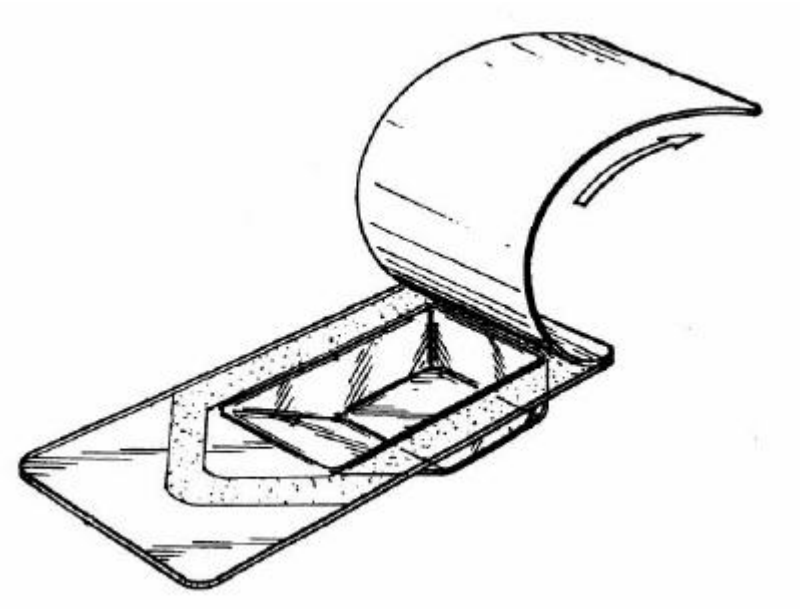

Special rules of classification within this group

The use of available Indexing Codes is mandatory.

B65D 75/327

[N: and forming several compartments]

Definition statement

This subclass/group covers:
Illustrative example of subject matter classified in this group:

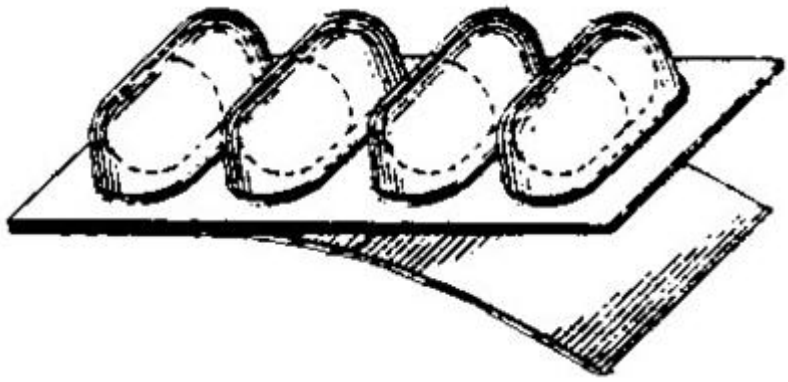

References relevant to classification in this group

This subclass/group does not cover:

Blister-type containers for medical or pharmaceutical purposes	A61J 1/035

Tools for removing pills or other small items out of blister packs	B65B 69/00

Informative references

Attention is drawn to the following places, which may be of interest for search:

Thermoformed trays or the like with a plurality of recesses for different materials located in different recesses	B65D 81/3294

Special rules of classification within this group

The use of available Indexing Codes is mandatory.

B65D 75/328

[N: the compartments being interconnected, e.g. by small channels]

Definition statement

This subclass/group covers:

Illustrative example of subject matter classified in this group:

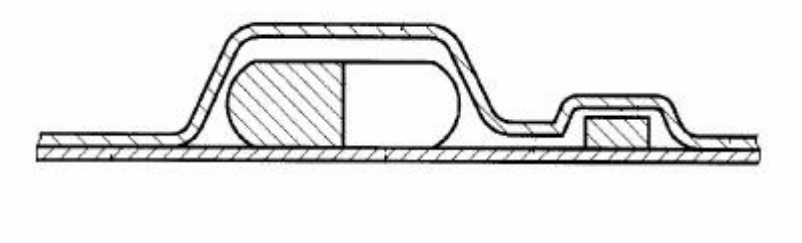

Special rules of classification within this group

The use of available Indexing Codes is mandatory.

B65D 75/34

and having several recesses to accommodate a series of articles or quantities of material

References relevant to classification in this group

This subclass/group does not cover:

Blister-type containers for medical or pharmaceutical purposes	A61J 1/035

Informative references

Attention is drawn to the following places, which may be of interest for search:

Thermoformed trays or the like with a plurality of recesses for different materials located in different recesses	B65D 81/3294

B65D 75/36

one sheet or blank being recessed and the other formed of relatively stiff flat sheet material, e.g. blister packages, [N: the recess or recesses being preformed (B65D 73/0057, B65D 73/0092 take precedence)]

References relevant to classification in this group

This subclass/group does not cover:

Illustrative example of subject matter classified in this group:

Blister-type containers for medical or pharmaceutical purposes	A61J 1/035
Tools for removing pills or other small items out of blister packs	B65B 69/00

Special rules of classification within this group

The use of available Indexing Codes is mandatory.

B65D 75/366

[N: and forming one compartment]

Definition statement

This subclass/group covers:

Illustrative example of subject matter classified in this group:

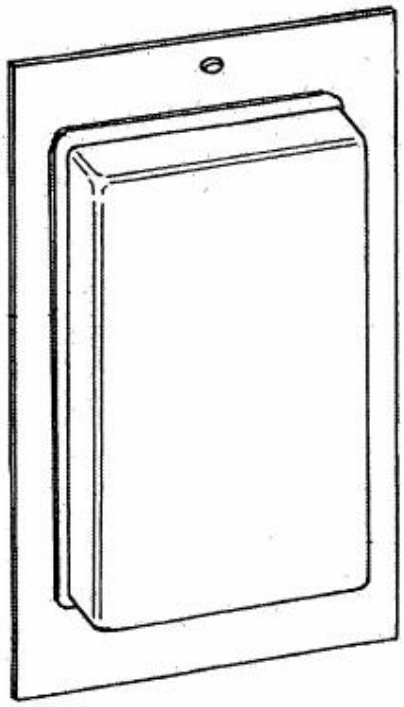

Special rules of classification within this group

The use of available Indexing Codes is mandatory.

B65D 75/367

[N: and forming several compartments]

Definition statement

This subclass/group covers:
Illustrative example of subject matter classified in this group:

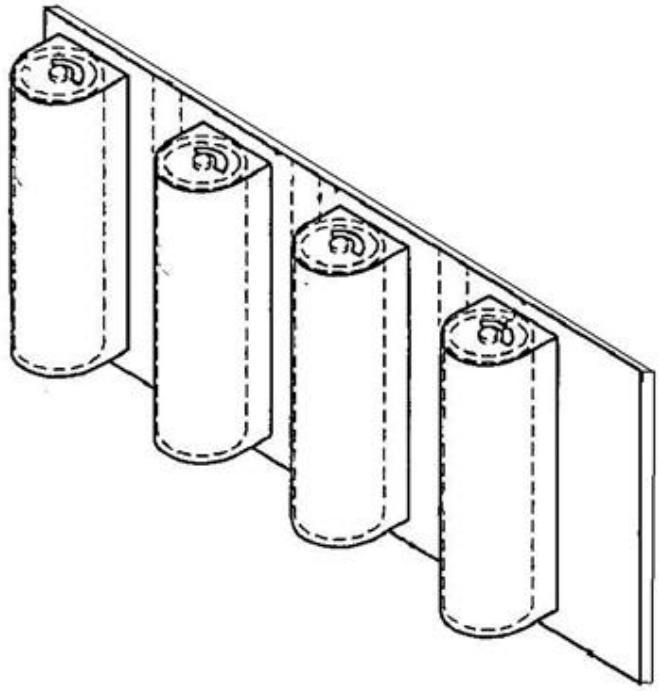

References relevant to classification in this group

This subclass/group does not cover:

Blister-type containers for medical or pharmaceutical purposes	A61J 1/035
Tools for removing pills or other small items out of blister packs	B65B 69/00

Informative references

Attention is drawn to the following places, which may be of interest for search:

Thermoformed trays or the like with a plurality of recesses for different materials located in different recesses	B65D 81/3294

Special rules of classification within this group

The use of available Indexing Codes is mandatory.

B65D 75/368

[N: the compartments being interconnected, e.g. by small channels]

Definition statement

This subclass/group covers:
Illustrative example of subject matter classified in this group:

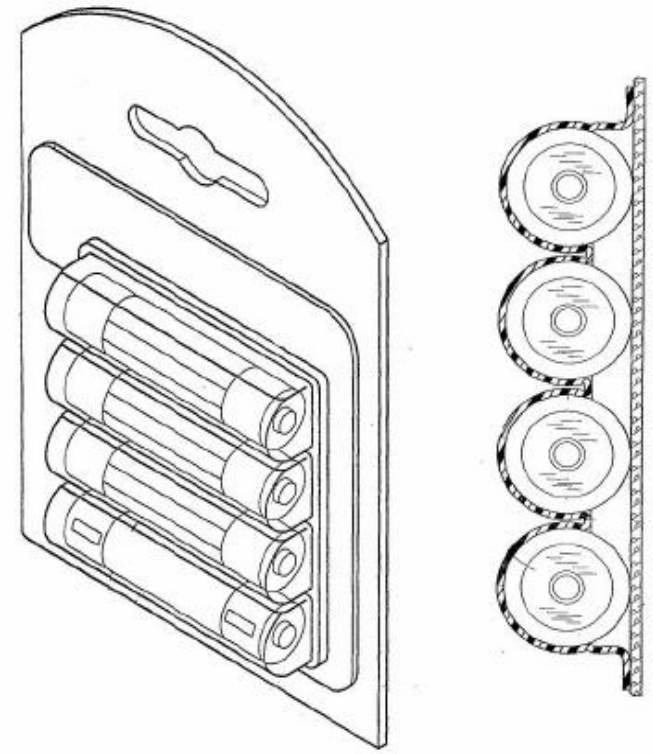

Special rules of classification within this group

The use of available Indexing Codes is mandatory.

B65D 75/38

Articles or materials enclosed in two or more wrappers disposed one inside the other [N: (for shock absorbing purposes B65D 81/03; for thermal insulating purposes B65D 81/3893)]

Definition statement

This subclass/group covers:
Illustrative example of subject matter classified in this group:

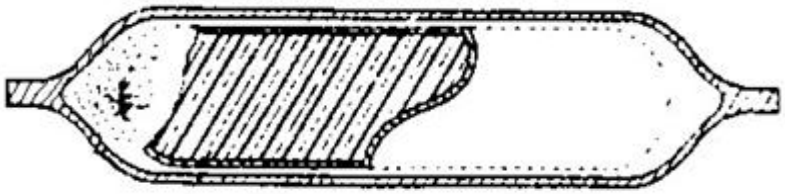

References relevant to classification in this group

This subclass/group does not cover:

Two tubular sheets, the axes thereof being arranged perpendicularly to each other	B65D 75/28

Informative references

Attention is drawn to the following places, which may be of interest for search:

Articles or materials enclosed in two or more containers disposed one within another	B65D 77/04

Special rules of classification within this group

The use of available Indexing Codes is mandatory.

B65D 75/40

Packages formed by enclosing successive articles, or increments of material, in webs, e.g. folded or tubular webs, or by subdividing tubes filled with liquid, semi-liquid, or plastic materials

Definition statement

This subclass/group covers:

Illustrative example of subject matter classified in this group:

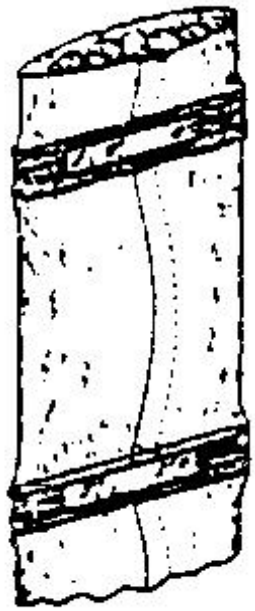

Special rules of classification within this group

The use of available Indexing Codes is mandatory.

B65D 75/42

Chains of interconnected packages

Definition statement

This subclass/group covers:
Illustrative example of subject matter classified in this group:



Special rules of classification within this group

The use of available Indexing Codes is mandatory.

B65D 75/44

Individual packages cut from webs or tubes

Definition statement

This subclass/group covers:
Illustrative example of subject matter classified in this group:

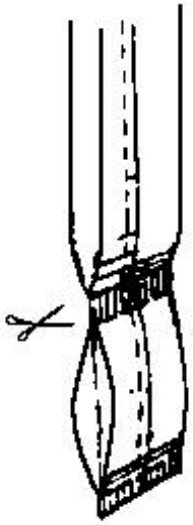

Special rules of classification within this group

The use of available Indexing Codes is mandatory.

B65D 75/46

containing articles

Definition statement

This subclass/group covers:
Illustrative example of subject matter classified in this group:

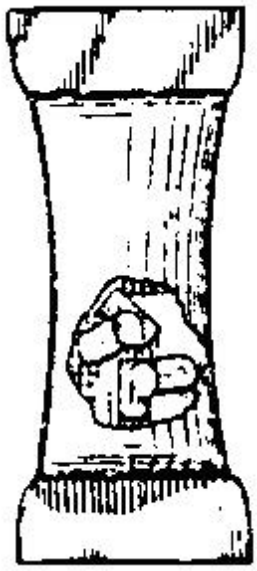

Special rules of classification within this group

The use of available Indexing Codes is mandatory.

B65D 75/48

containing liquids, semi-liquids, or pastes, e.g. cushion-shaped packages

Definition statement

This subclass/group covers:

Illustrative example of subject matter classified in this group:

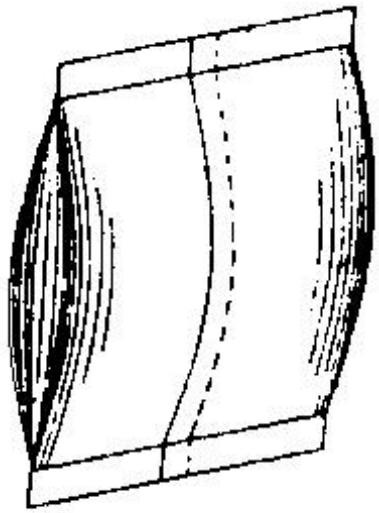

Informative references

Attention is drawn to the following places, which may be of interest for search:

Containers, packaging elements, or packages using pillow-like elements filled with fluid	B65D 81/052

Special rules of classification within this group

The use of available Indexing Codes is mandatory.

B65D 75/50

Tetrahedral packages

Definition statement

This subclass/group covers:
Illustrative example of subject matter classified in this group:

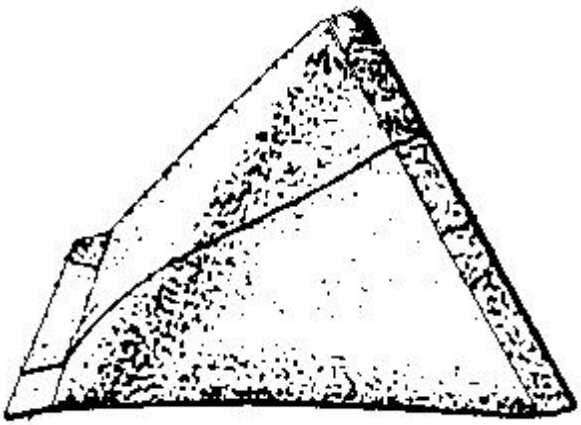

References relevant to classification in this group

This subclass/group does not cover:

Packages for tetrahedral packages	B65D 85/542

Special rules of classification within this group

The use of available Indexing Codes is mandatory.

B65D 75/52

Details

References relevant to classification in this group

This subclass/group does not cover:

Flexible valves, e.g. pressure-relief valves	B65D 77/225

Special rules of classification within this group

The use of available Indexing Codes is mandatory.

B65D 75/522

[N: Inspection openings or windows]

Definition statement

This subclass/group covers:

Illustrative example of subject matter classified in this group:

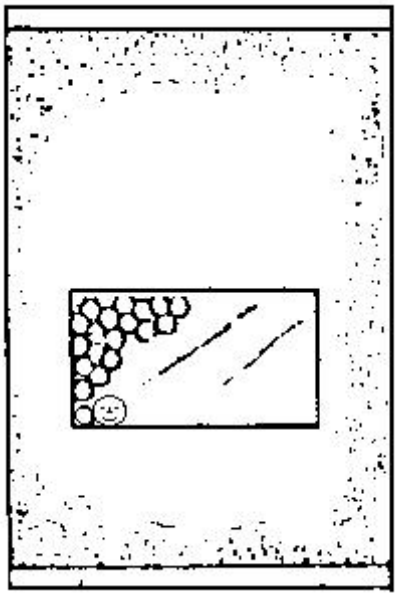

Informative references

Attention is drawn to the following places, which may be of interest for search:

Windows or other apertures, e.g. for viewing contents	B65D 33/04
Wrappers or flexible covers with some areas transparent and others opaque	B65D 65/18
Means or constructions for testing or controlling the contents	B65D 2201/00

Special rules of classification within this group

The use of available Indexing Codes is mandatory.

B65D 75/525

[N: External rigid or semi-rigid supports]

Definition statement

This subclass/group covers:

Illustrative example of subject matter classified in this group:

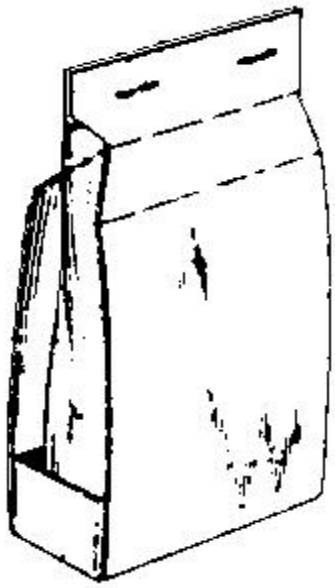

Informative references

Attention is drawn to the following places, which may be of interest for search:

Bags or like containers made of paper and having structural provision for thickness of contents	B65D 31/00
Details of, or accessories for, sacks or bags	B65D 33/00

Special rules of classification within this group

The use of available Indexing Codes is mandatory.

B65D 75/527

[N: Tear-lines for separating a package into individual packages (B65D 1/30, B65D 21/0206, B65D 75/34 take precedence)]

Definition statement

This subclass/group covers:

Illustrative example of subject matter classified in this group:

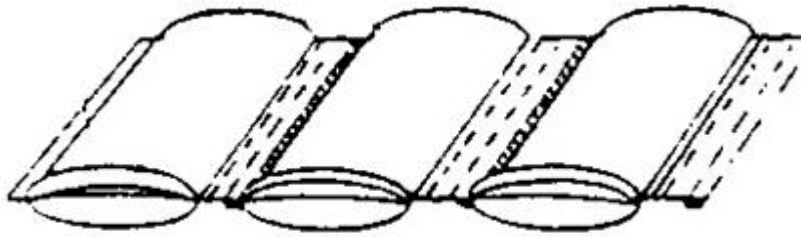

Informative references

Attention is drawn to the following places, which may be of interest for search:

Groups of containers joined together end-to-end or side-by-side	B65D 1/30
Separate rigid or semi-rigid trays or cups joined together	B65D 21/0206
Articles or materials wholly enclosed in composite wrappers and having several recesses to accommodate a series of articles or quantities of material	B65D 75/34
Tear-lines for removing successive sections of a package	B65D 75/5888

Special rules of classification within this group

The use of available Indexing Codes is mandatory.

B65D 75/54

Cards, coupons, or other inserts or accessories (opening devices B65D 75/70)

References relevant to classification in this group

This subclass/group does not cover:

Information or decoration elements, e.g. content indicators	B65D 5/4212
Means for the attachment of smaller articles of tags	B65D 23/14

Means for the attachment of labels, cards, coupons or the like	B65D 25/205
Information or decoration elements, e.g. level indicators, detachable tabs or coupons	B65D 33/004
Drinking straws incorporated in or attached to containers	B65D 77/28

Informative references

Attention is drawn to the following places, which may be of interest for search:

Containers of polygonal cross-section the container body comprising a set of interconnected cells	B65D 5/009
Means for the attachment of smaller articles of tags	B65D 23/14
Means for the attachment of labels, cards, coupons or the like	B65D 25/205
Information or decoration elements, e.g. level indicators, detachable tabs or coupons	B65D 33/004
Tear-lines for removing successive sections of a package	B65D 75/5888

Special rules of classification within this group

The use of available Indexing Codes is mandatory.

B65D 75/545

[N: the inserts or accessories being located within a pouch or envelope attached to the exterior of the packages, e.g. shipping mailers (envelope construction B65D 27/00)]

Definition statement

This subclass/group covers:
Illustrative example of subject matter classified in this group:

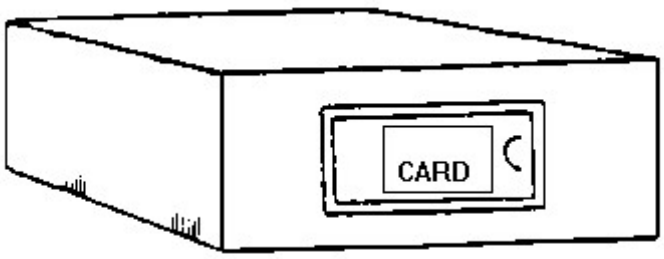

Special rules of classification within this group

The use of available Indexing Codes is mandatory.

B65D 75/56

Handles or other suspension means

Definition statement

This subclass/group covers:
Illustrative example of subject matter classified in this group:

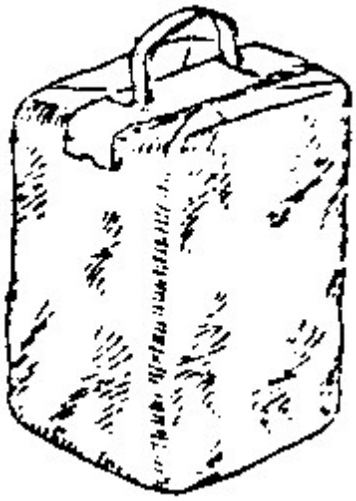

References relevant to classification in this group

This subclass/group does not cover:

Loose handles for carrying purposes	A45F 5/10

Informative references

Attention is drawn to the following places, which may be of interest for search:

External fittings for facilitating lifting or suspending of containers	B65D 25/22
Handles	B65D 33/06
Elements provided with handles or other suspension means	B65D 63/18

Special rules of classification within this group

The use of available Indexing Codes is mandatory.

B65D 75/563

[N: Integral handles or suspension means (B65D 75/566 takes precedence)]

Definition statement

This subclass/group covers:

Illustrative example of subject matter classified in this group:

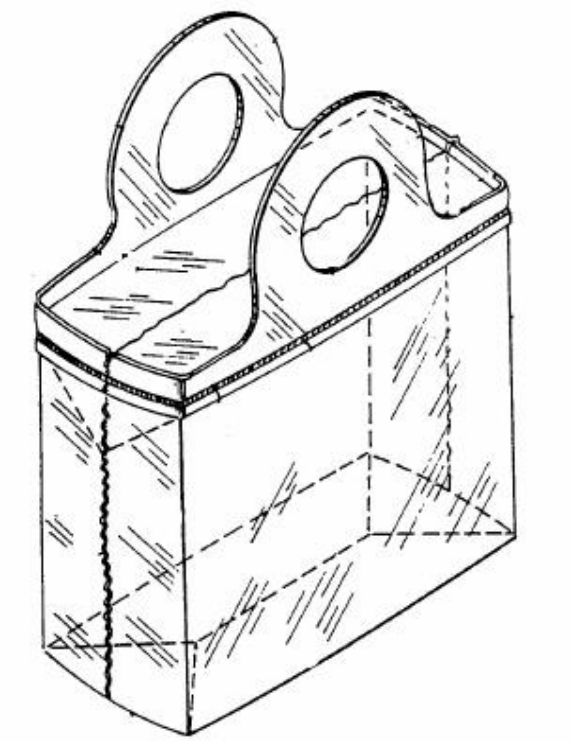

References relevant to classification in this group

This subclass/group does not cover:

Hand holes or suspension apertures	B65D 75/566

Special rules of classification within this group

The use of available Indexing Codes is mandatory.

B65D 75/566

[N: Hand holes or suspension apertures]

Definition statement

This subclass/group covers:
Illustrative example of subject matter classified in this group:

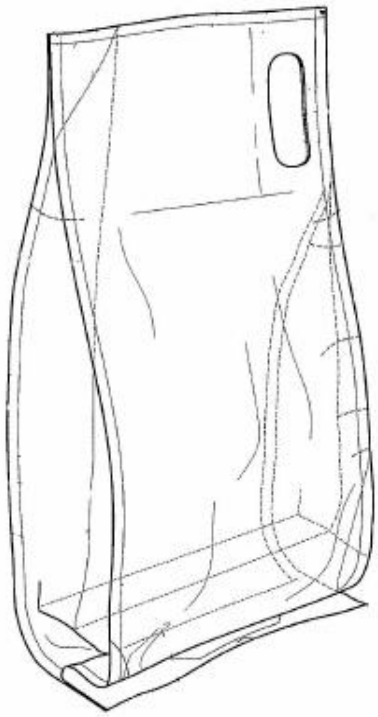

Special rules of classification within this group

The use of available Indexing Codes is mandatory.

B65D 75/58

Opening or contents-removing devices added or incorporated during package manufacture [N: (B65D 75/36, B65D 85/1027 take precedence)]

References relevant to classification in this group

This subclass/group does not cover:

Articles or materials enclosed between two opposed sheets or blanks having their margins united, one sheet or blank being recessed and the other formed of relatively stiff flat sheet material	B65D 75/36
Opening devices	B65D 85/1027

Informative references

Attention is drawn to the following places, which may be of interest for search:

Packages formed by enclosing successive articles, or increments of material, in webs, e.g. folded or tubular webs, or by subdividing tubes filled with liquid, semi-liquid, or plastic materials	B65D 75/40 - B65D 75/50

Special rules of classification within this group

The use of available Indexing Codes is mandatory.

B65D 75/5805

[N: for tearing a side strip parallel and next to the edge, e.g. by means of a line of weakness]

Definition statement

This subclass/group covers:

Illustrative example of subject matter classified in this group:

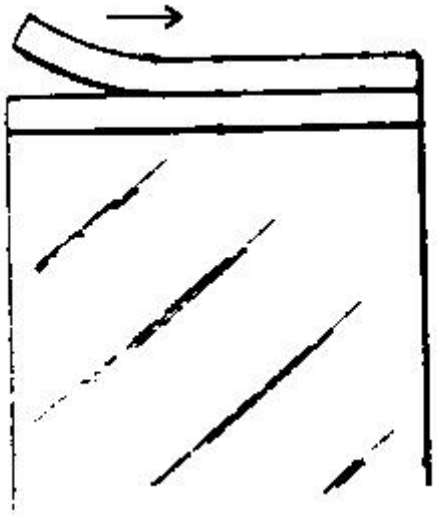

Informative references

Attention is drawn to the following places, which may be of interest for search:

Packages formed by enclosing successive articles, or increments of material, in webs, e.g. folded or tubular webs, or by subdividing tubes filled with liquid, semi-liquid, or plastic materials	B65D 75/40 - B65D 75/50

Special rules of classification within this group

The use of available Indexing Codes is mandatory.

B65D 75/5811

[N: and defining, after tearing, a small dispensing spout, a small orifice or the like]

Definition statement

This subclass/group covers:

Illustrative example of subject matter classified in this group:

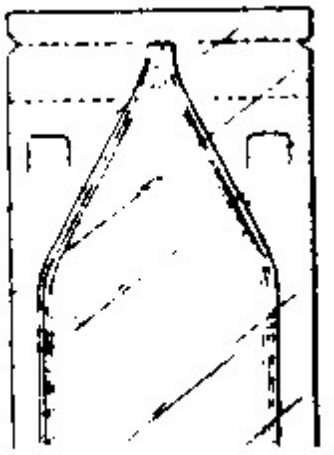

Informative references

Attention is drawn to the following places, which may be of interest for search:

Packages formed by enclosing successive articles, or increments of material, in webs, e.g. folded or tubular webs, or by subdividing tubes filled with liquid, semi-liquid, or plastic materials	B65D 75/40 - B65D 75/50
For tearing a corner or other small portion next to the edge and defining a small dispensing spout, a small orifice or the like	B65D 75/5822
Integral spouts	B65D 75/5866

Special rules of classification within this group

The use of available Indexing Codes is mandatory.

B65D 75/5816

[N: for tearing a corner or other small portion next to the edge, e.g. a U-shaped portion]

Definition statement

This subclass/group covers:

Illustrative example of subject matter classified in this group:

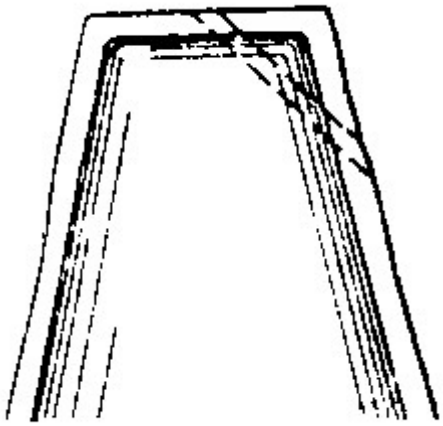

Informative references

Attention is drawn to the following places, which may be of interest for search:

Packages formed by enclosing successive articles, or increments of material, in webs, e.g. folded or tubular webs, or by subdividing tubes filled with liquid, semi-liquid, or plastic materials	B65D 75/40 - B65D 75/50

Special rules of classification within this group

The use of available Indexing Codes is mandatory.

B65D 75/5822

[N: and defining, after tearing, a small dispensing spout, a small orifice or the like]

Definition statement

This subclass/group covers:

Illustrative example of subject matter classified in this group:

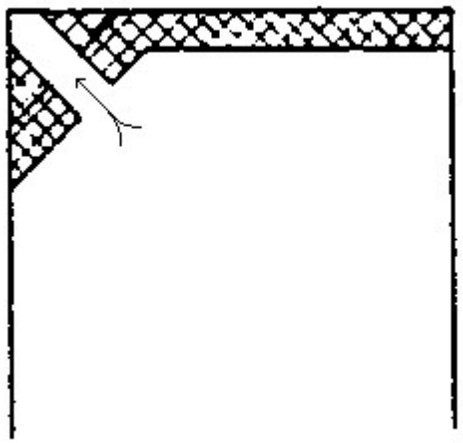

Informative references

Attention is drawn to the following places, which may be of interest for search:

Packages formed by enclosing successive articles, or increments of material, in webs, e.g. folded or tubular webs, or by subdividing tubes filled with liquid, semi-liquid, or plastic materials	B65D 75/40 - B65D 75/50
For tearing a side strip parallel and next to the edge, e.g. by means of a line of weakness and defining a small dispensing spout, a small orifice or the like	B65D 75/5811
Integral spouts	B65D 75/5866

Special rules of classification within this group

The use of available Indexing Codes is mandatory.

B65D 75/5827

[N: Tear-lines provided in a wall portion (B65D 75/5805, B65D 75/5816 take precedence)]

Definition statement

This subclass/group covers:

Illustrative example of subject matter classified in this group:

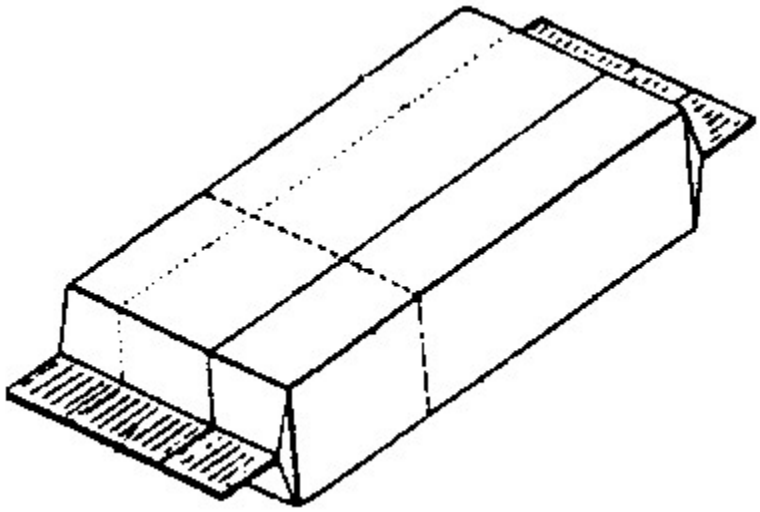

References relevant to classification in this group

This subclass/group does not cover:

Opening or contents-removing devices added or incorporated during package manufacture for tearing a side strip parallel and next to the edge	B65D 75/5805
Opening or contents-removing devices added or incorporated during package manufacture, for tearing a corner or other small portion next to the edge	B65D 75/5816

Informative references

Attention is drawn to the following places, which may be of interest for search:

Packages formed by enclosing successive articles, or increments of material, in webs, e.g. folded or tubular webs, or by subdividing tubes filled with liquid, semi-liquid, or plastic materials	B65D 75/40 - B65D 75/50

Special rules of classification within this group

The use of available Indexing Codes is mandatory.

B65D 75/5833

[N: for tearing out a portion of the wall]

Definition statement

This subclass/group covers:
Illustrative example of subject matter classified in this group:

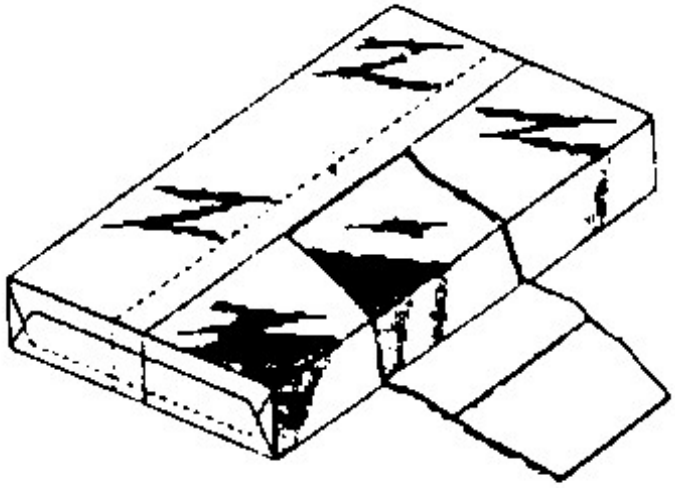

Informative references

Attention is drawn to the following places, which may be of interest for search:

Packages formed by enclosing successive articles, or increments of material, in webs, e.g. folded or tubular webs, or by subdividing tubes filled with liquid, semi-liquid, or plastic materials	B65D 75/40 - B65D 75/50

Special rules of classification within this group

The use of available Indexing Codes is mandatory.

B65D 75/5838

[N: combined with separate fixed tearing means, e.g. tabs]

Definition statement

This subclass/group covers:

Illustrative example of subject matter classified in this group:

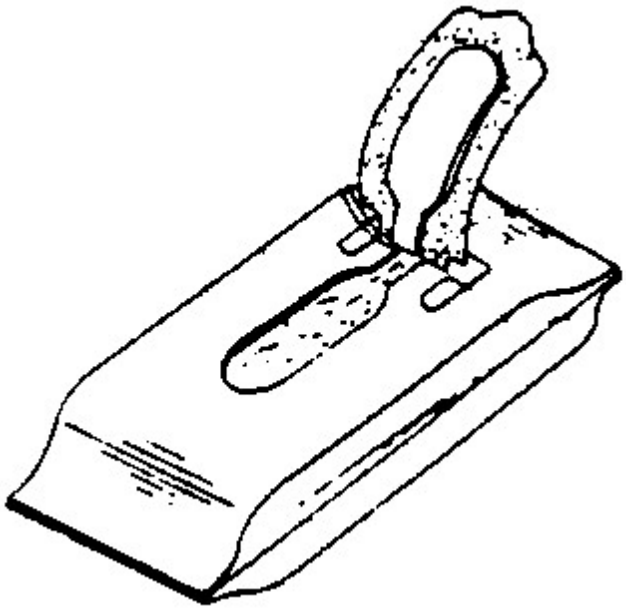

Informative references

Attention is drawn to the following places, which may be of interest for search:

Packages formed by enclosing successive articles, or increments of material, in webs, e.g. folded or tubular webs, or by subdividing tubes filled with liquid, semi-liquid, or plastic materials	B65D 75/40 - B65D 75/50

Special rules of classification within this group

The use of available Indexing Codes is mandatory.

B65D 75/5844

[N: the portion of the wall being a narrow strip, e.g. between lines of weakness (B65D 75/5838 takes precedence)]

Definition statement

This subclass/group covers:

Illustrative example of subject matter classified in this group:

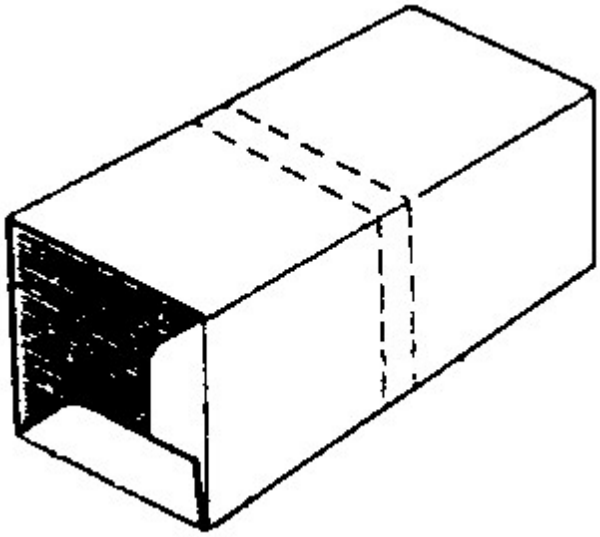

References relevant to classification in this group

This subclass/group does not cover:

Tear-lines provided in a wall portion combined with separate fixed tearing means	B65D 75/5838

Informative references

Attention is drawn to the following places, which may be of interest for search:

Packages formed by enclosing successive articles, or increments of material, in webs, e.g. folded or tubular webs, or by subdividing tubes filled with liquid, semi-liquid, or plastic materials	B65D 75/40 - B65D 75/50

Special rules of classification within this group

The use of available Indexing Codes is mandatory.

B65D 75/585

[N: the tear-lines being broken by deformation or bending]

Definition statement

This subclass/group covers:
Illustrative example of subject matter classified in this group:

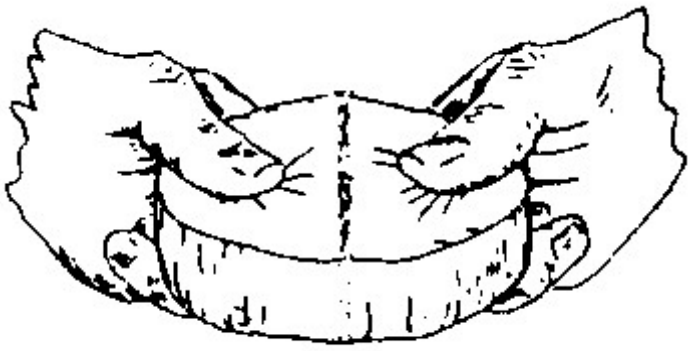

Informative references

Attention is drawn to the following places, which may be of interest for search:

Packages formed by enclosing successive articles, or increments of material, in webs, e.g. folded or tubular webs, or by subdividing tubes filled with liquid, semi-liquid, or plastic materials	B65D 75/40 -B65D 75/50

Special rules of classification within this group

The use of available Indexing Codes is mandatory.

B65D 75/5855

[N: Peelable seals]

Definition statement

This subclass/group covers:
Illustrative example of subject matter classified in this group:

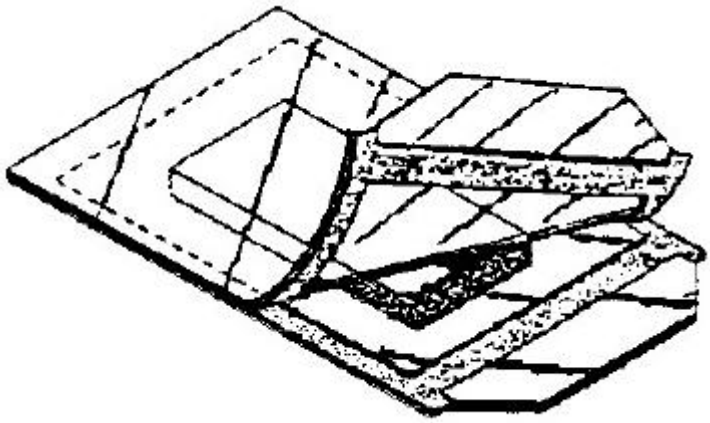

References relevant to classification in this group

This subclass/group does not cover:

Making non-permanent or releasable joints	B29C 65/76

Informative references

Attention is drawn to the following places, which may be of interest for search:

Packages formed by enclosing successive articles, or increments of material, in webs, e.g. folded or tubular webs, or by subdividing tubes filled with liquid, semi-liquid, or plastic materials	B65D 75/40 -B65D 75/50

Special rules of classification within this group

The use of available Indexing Codes is mandatory.

B65D 75/5861

[N: Spouts (B65D 75/5811, B65D 75/5822 take precedence)]

Informative references

Attention is drawn to the following places, which may be of interest for search:

Packages formed by enclosing successive articles, or increments of	B65D 75/40 -B65D 75/50

material, in webs, e.g. folded or tubular webs, or by subdividing tubes filled with liquid, semi-liquid, or plastic materials	
Flexible containers disposed within polygonal containers formed by folding a carton blank	B65D 77/062

Special rules of classification within this group

The use of available Indexing Codes is mandatory.

B65D 75/5866

[N: Integral spouts]

Definition statement

This subclass/group covers:

Illustrative example of subject matter classified in this group:

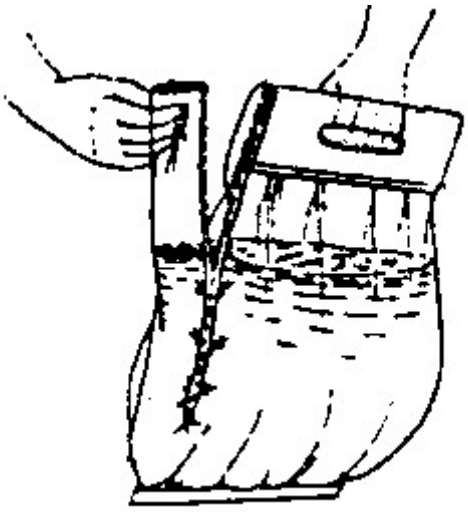

Informative references

Attention is drawn to the following places, which may be of interest for search:

Packages formed by enclosing successive articles, or increments of material, in webs, e.g. folded or tubular webs, or by subdividing tubes filled with liquid, semi-liquid, or plastic	B65D 75/40 -B65D 75/50

materials	
Opening or contents-removing devices for tearing a side strip parallel and next to the edge and defining, after tearing, a small dispensing spout, a small orifice or the like	B65D 75/5811
Opening or contents-removing devices for tearing a side strip parallel and next to the edge and defining, after tearing, a small dispensing spout, a small orifice or the like	B65D 75/5822
Spouts, pouring necks or discharging tubes fixed to or integral with the flexible container	B65D 77/065

Special rules of classification within this group

The use of available Indexing Codes is mandatory.

B65D 75/5872

[N: Non-integral spouts]

Informative references

Attention is drawn to the following places, which may be of interest for search:

Spouts formed separately from the container	B65D 5/746

Special rules of classification within this group

The use of available Indexing Codes is mandatory.

B65D 75/5877

[N: connected to a planar surface of the package wall]

Definition statement

This subclass/group covers:

Illustrative example of subject matter classified in this group:

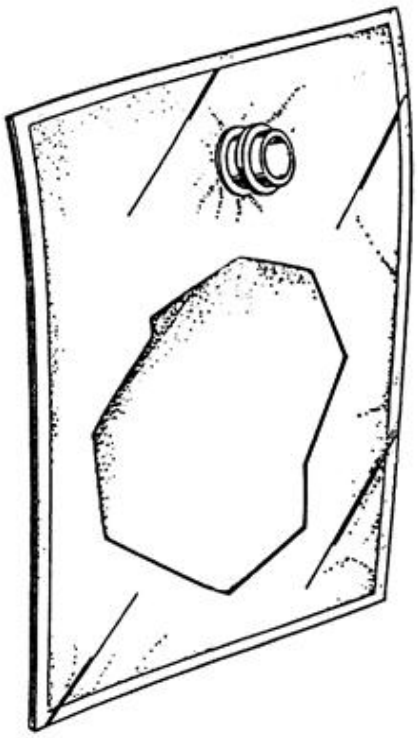

Special rules of classification within this group

The use of available Indexing Codes is mandatory.

B65D 75/5883

[N: connected to the package at the sealed junction of two package walls]

Definition statement

This subclass/group covers:

Illustrative example of subject matter classified in this group:

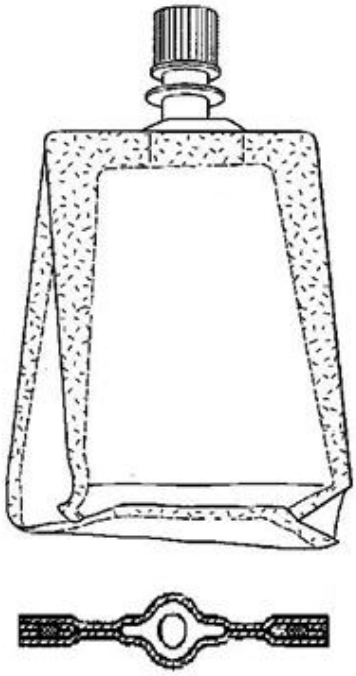

Special rules of classification within this group

The use of available Indexing Codes is mandatory.

B65D 75/5888

[N: Tear-lines for removing successive sections of a package (for separating package into individual packages B65D 75/527)]

Definition statement

This subclass/group covers:
Illustrative example of subject matter classified in this group:

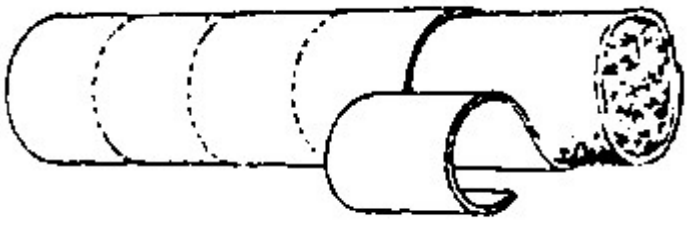

Informative references

Attention is drawn to the following places, which may be of interest for search:

Packages formed by enclosing successive articles, or increments of material, in webs, e.g. folded or tubular webs, or by subdividing tubes filled with liquid, semi-liquid, or plastic materials	B65D 75/40 -B65D 75/50
Opening arrangements or devices incorporated in, or attached to, containers, forming a circumferential line of weakness	B65D 3/262

Special rules of classification within this group

The use of available Indexing Codes is mandatory.

B65D 75/5894

[N: Preformed openings provided in a wall portion and covered by a separate removable flexible element]

Definition statement

This subclass/group covers:

Illustrative example of subject matter classified in this group:

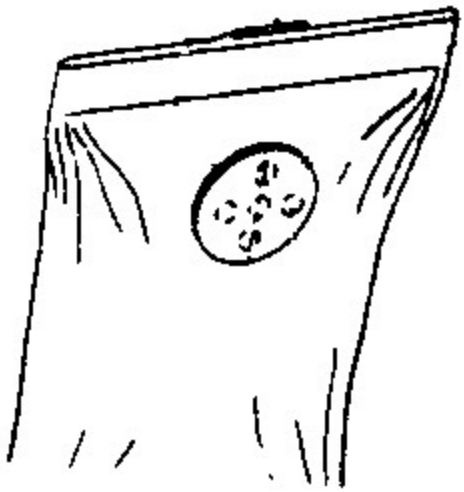

Informative references

Attention is drawn to the following places, which may be of interest for search:

Packages formed by enclosing successive articles, or increments of material, in webs, e.g. folded or tubular webs, or by subdividing tubes filled with liquid, semi-liquid, or plastic materials	B65D 75/40 -B65D 75/50
Non-integral frangible members applied to, or inserted in, a preformed opening	B65D 17/50

Special rules of classification within this group

The use of available Indexing Codes is mandatory.

B65D 75/66

Inserted or applied tearing-strings or like flexible elements

Definition statement

This subclass/group covers:

Illustrative example of subject matter classified in this group:

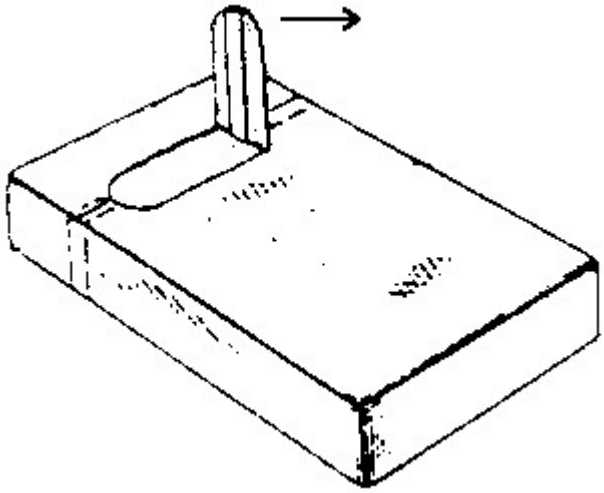

Informative references

Attention is drawn to the following places, which may be of interest for search:

Tearing-strings or -strips	B65D 27/38
Tearing-strings or like flexible elements	B65D 77/32

Special rules of classification within this group

The use of available Indexing Codes is mandatory.

B65D 75/68

extending through wrapper closure or between wrapper layers

Definition statement

This subclass/group covers:
Illustrative example of subject matter classified in this group:

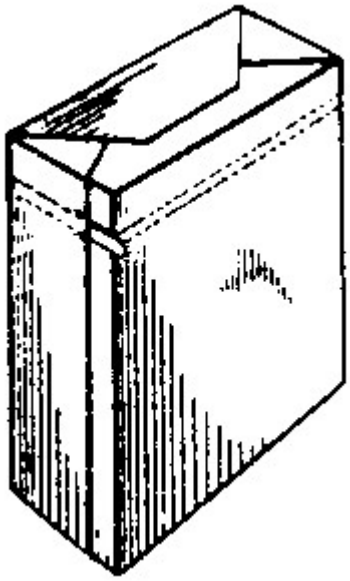

Informative references

Attention is drawn to the following places, which may be of interest for search:

Opening devices	B65D 85/1027

Special rules of classification within this group

The use of available Indexing Codes is mandatory.

B65D 75/70

Rigid cutting or tearing devices

Definition statement

This subclass/group covers:
Illustrative example of subject matter classified in this group:

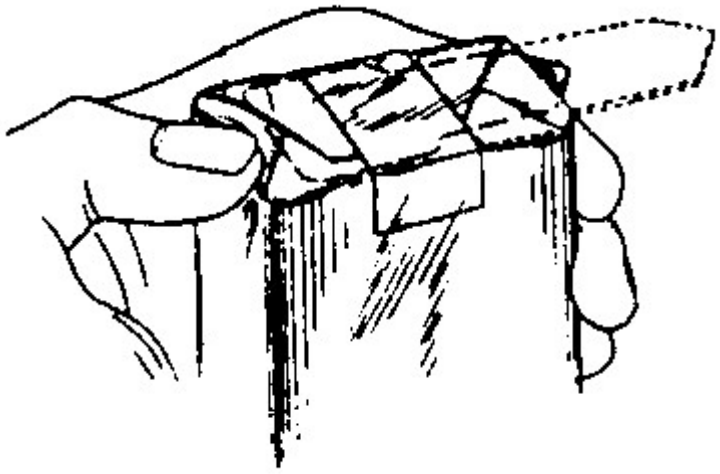

Informative references

Attention is drawn to the following places, which may be of interest for search:

Rigid cutting or tearing devices	B65D 77/40
Opening devices	B65D 85/1027

Special rules of classification within this group

The use of available Indexing Codes is mandatory.

B65D 77/00

Packages formed by enclosing articles or materials in preformed containers, e.g. boxes, cartons, sacks, bags

B65D 77/003

[N: Articles enclosed in rigid or semi-rigid containers, the whole being wrapped]

Definition statement

This subclass/group covers:
Illustrative example of subject matter classified in this group:

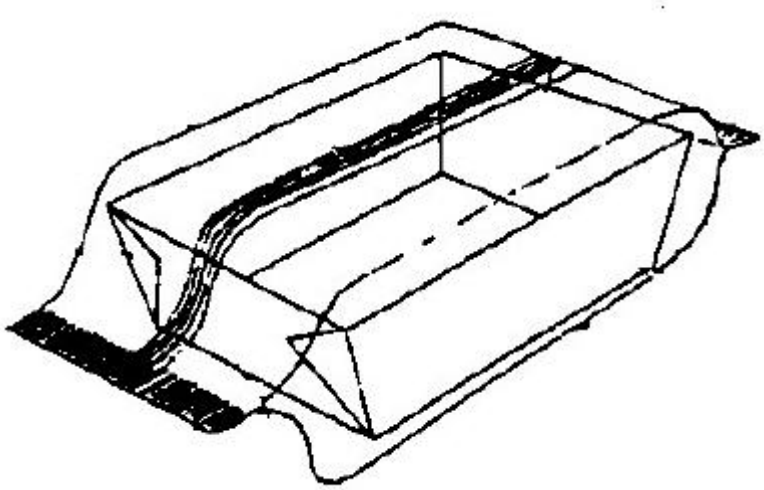

References relevant to classification in this group

This subclass/group does not cover:

Tray-like elements provided with handles without partitions	B65D 71/0007
Wrapped articles in rigid or semi-rigid containers	B65D 77/02
Rigid or semi-rigid containers in flexible containers	B65D 77/0406
Flexible containers in rigid or semi-rigid containers	B65D 77/06

Informative references

Attention is drawn to the following places, which may be of interest for search:

External coverings or coatings	B65D 5/62
Rigid or semi-rigid containers in flexible containers	B65D 77/0406

B65D 77/006

[N: Containers simulating a book (pencil cases A45C 11/34; books, book covers B42D; albums, filing appliances, e.g.

boxes, B42F; for videos G11B)]

Definition statement

This subclass/group covers:
Illustrative example of subject matter classified in this group:

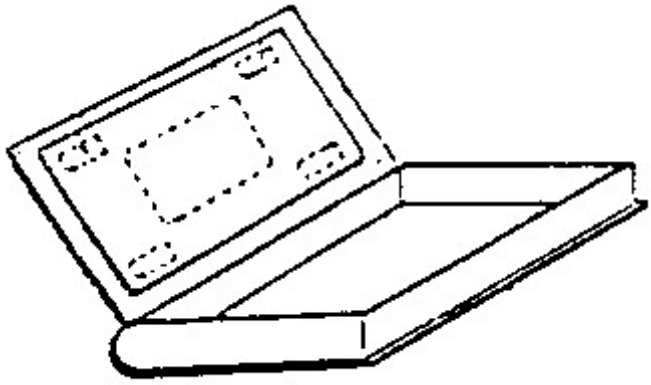

B65D 77/02

Wrapped articles enclosed in rigid or semi-rigid containers

Definition statement

This subclass/group covers:
Illustrative example of subject matter classified in this group:

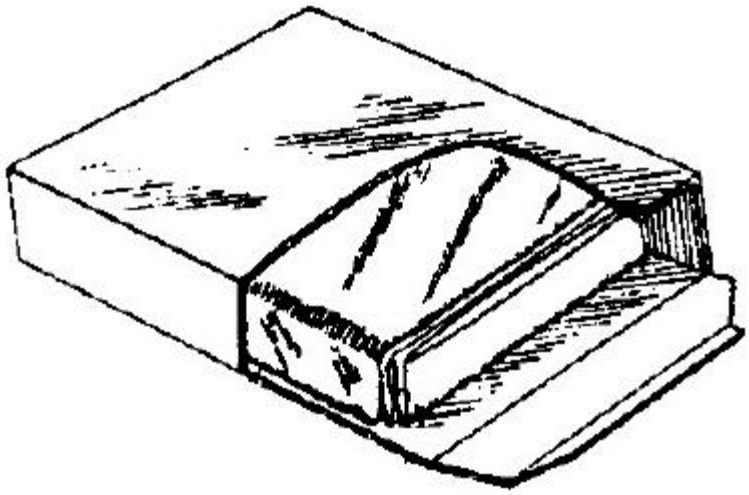

References relevant to classification in this group

This subclass/group does not cover:

Rigid or semi-rigid containers in wrapper	B65D 77/003

Rigid or semi-rigid containers in flexible containers	B65D 77/0406
Flexible containers in rigid or semi-rigid containers	B65D 77/06

B65D 77/04

Articles or materials enclosed in two or more containers disposed one within another

Definition statement

This subclass/group covers:

Illustrative example of subject matter classified in this group:

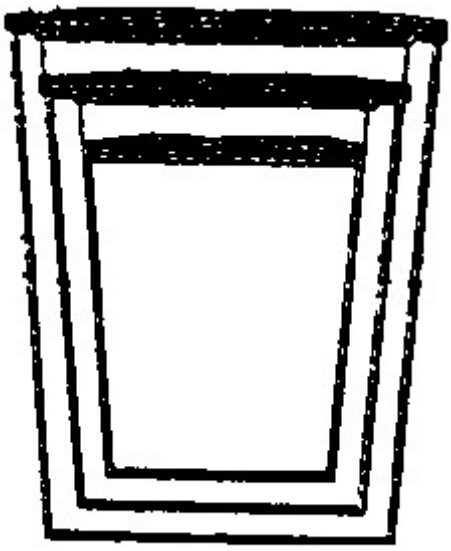

References relevant to classification in this group

This subclass/group does not cover:

Bottle-crates containing wrapped bottles	B65D 1/243
For bottles with handles in a sleeve	B65D 23/001, B65D 23/08, B65D 23/10
Coverings for bottles	B65D 23/08

Wrapped articles in wrapper	B65D 75/38
Rigid or semi-rigid containers in wrapper	B65D 77/003
Wrapped articles in rigid or semi-rigid containers	B65D 77/02
Rigid or semi-rigid containers in flexible containers	B65D 77/0406
Flexible containers in rigid or semi-rigid containers	B65D 77/06
Packages containing several articles intended to be suspended from a display rod	B65D 83/0088

Special rules of classification within this group

The use of available Indexing Codes is mandatory.

B65D 77/0406

[N: Rigid containers in preformed flexible containers]

Definition statement

This subclass/group covers:

Illustrative example of subject matter classified in this group:

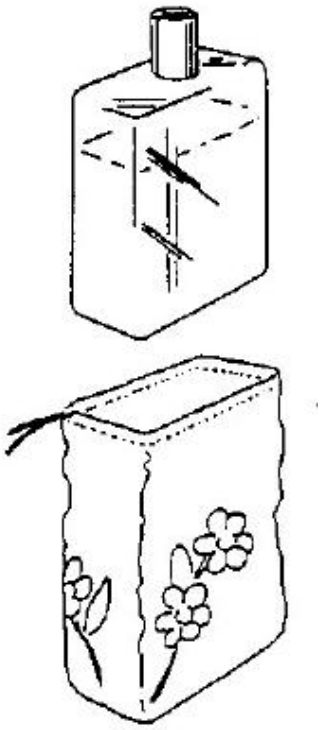

References relevant to classification in this group

This subclass/group does not cover:

Coverings for bottles	B65D 23/08
Rigid or semi-rigid containers in wrappers	B65D 77/003
Wrapped articles in rigid or semi-rigid containers	B65D 77/02
Flexible containers in rigid or semi-rigid containers	B65D 77/06

Special rules of classification within this group

The use of available Indexing Codes is mandatory.

B65D 77/0413

[N: the inner and outer containers being rigid or semi-rigid and the outer container being of polygonal cross-section formed by folding or erecting one or more blanks, e.g. carton]

Definition statement

This subclass/group covers:

Illustrative example of subject matter classified in this group:

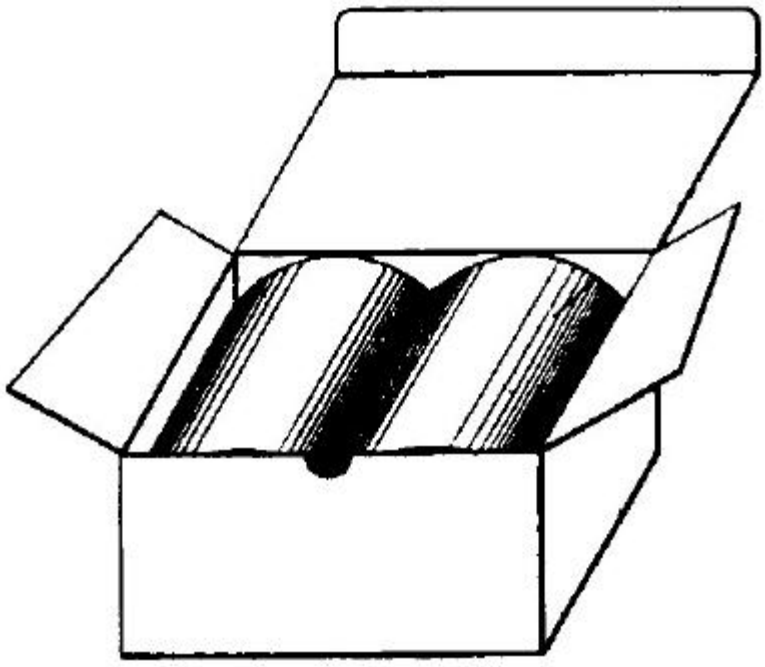

References relevant to classification in this group

This subclass/group does not cover:

Rigid or semi-rigid containers in wrapper	B65D 77/003
Wrapped articles in rigid or semi-rigid containers	B65D 77/02
Rigid or semi-rigid containers in flexible containers	B65D 77/0406
Flexible containers in rigid or semi-rigid containers	B65D 77/06

Special rules of classification within this group

The use of available Indexing Codes is mandatory.

B65D 77/042

[N: the inner container being of polygonal cross-section formed by folding or erecting one or more blanks, e.g. carton]

Definition statement

This subclass/group covers:

Illustrative example of subject matter classified in this group:

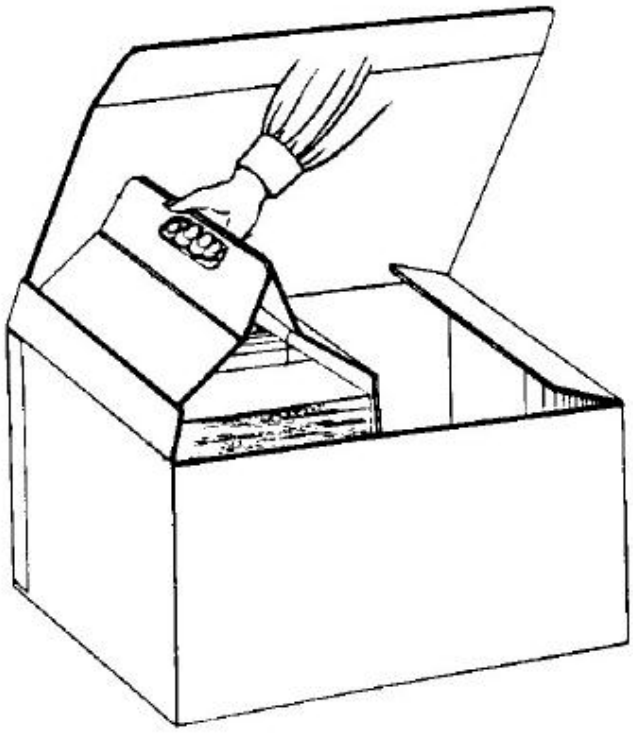

Special rules of classification within this group

The use of available Indexing Codes is mandatory.

B65D 77/0426

[N: the inner container being a bottle, canister or like hollow container]

Definition statement

This subclass/group covers:

Illustrative example of subject matter classified in this group:

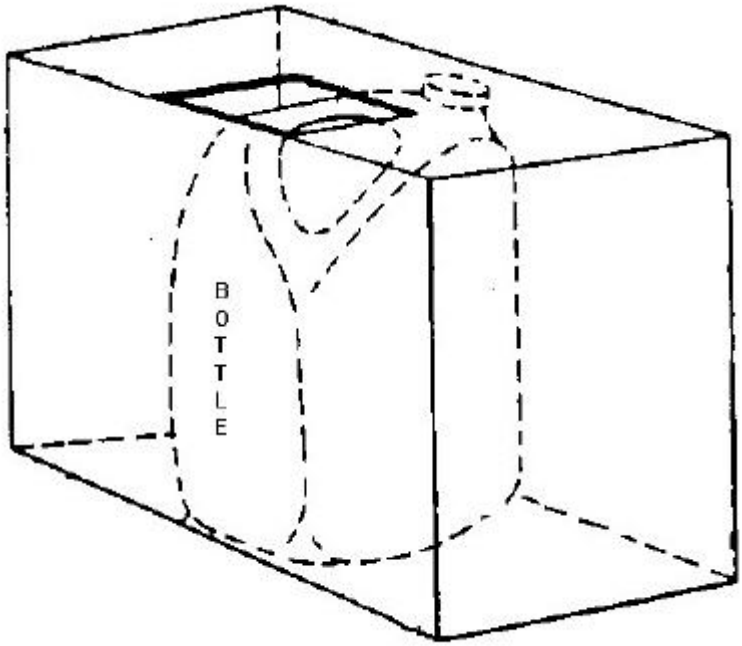

Special rules of classification within this group

The use of available Indexing Codes is mandatory.

B65D 77/0433

[N: the inner container being a tray or like shallow container, not formed by folding or erecting one or more blanks (B65D 81/3862 takes precedence)]

Definition statement

This subclass/group covers:

Illustrative example of subject matter classified in this group:

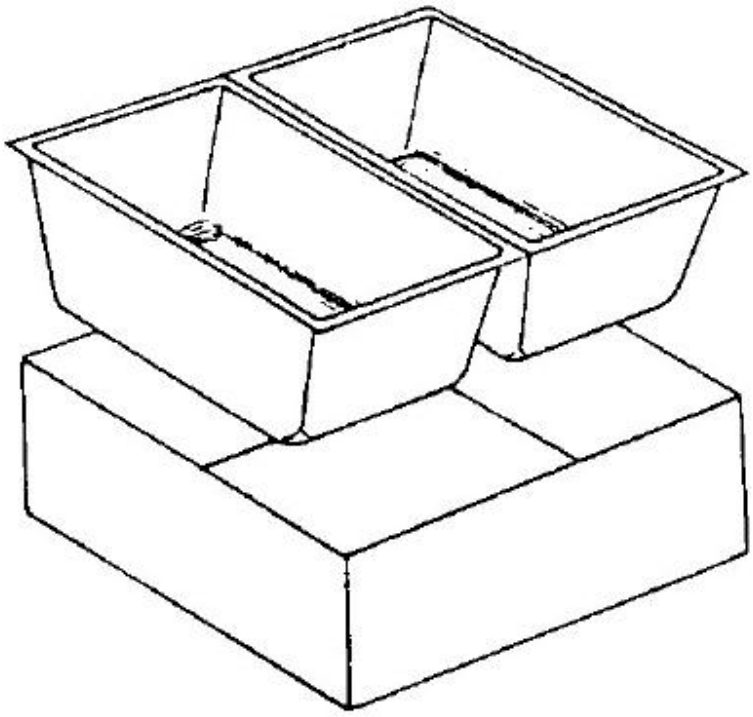

Informative references

Attention is drawn to the following places, which may be of interest for search:

Tray-like elements formed in one piece	B65D 5/503

Special rules of classification within this group

The use of available Indexing Codes is mandatory.

B65D 77/044

[N: the inner container being a filled deformable tube]

Definition statement

This subclass/group covers:
Illustrative example of subject matter classified in this group:

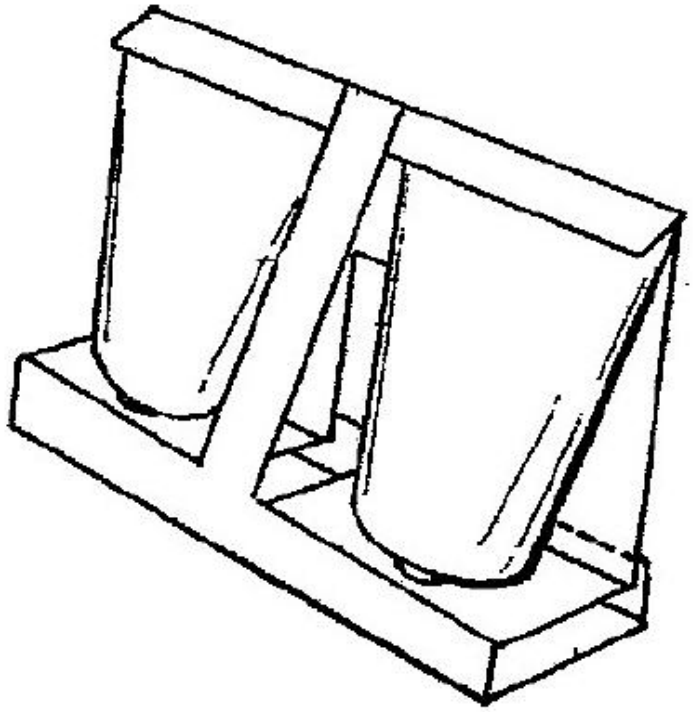

Special rules of classification within this group

The use of available Indexing Codes is mandatory.

B65D 77/0446

[N: the inner and outer containers being rigid or semi-rigid and the outer container being of polygonal cross-section not formed by folding or erecting one or more blanks (B65D 81/3825 takes precedence)]

Definition statement

This subclass/group covers:

Illustrative example of subject matter classified in this group:

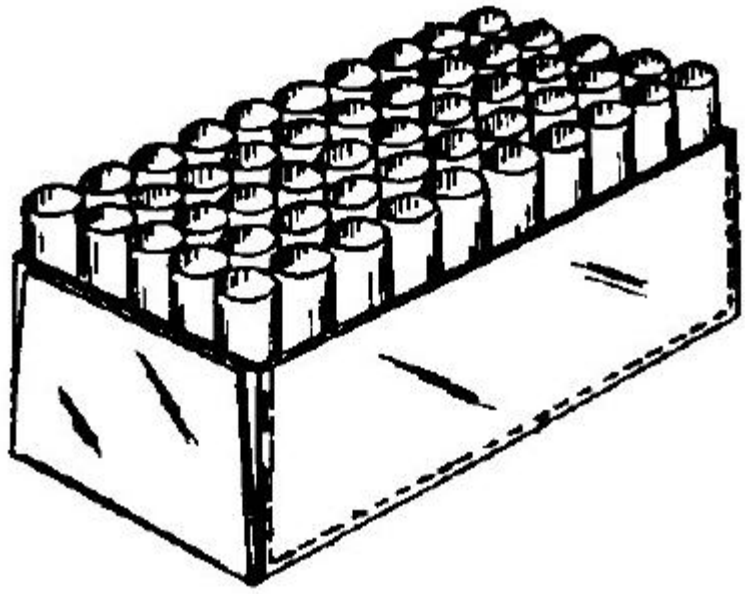

References relevant to classification in this group

This subclass/group does not cover:

Rigid or semi-rigid containers in wrapper	B65D 77/003
Wrapped articles in rigid or semi-rigid containers	B65D 77/02
Rigid or semi-rigid containers in flexible containers	B65D 77/0406
Flexible containers in rigid or semi-rigid containers	B65D 77/06

Special rules of classification within this group

The use of available Indexing Codes is mandatory.

B65D 77/0453

[N: the inner container having a polygonal cross-section]

Definition statement

This subclass/group covers:

Illustrative example of subject matter classified in this group:

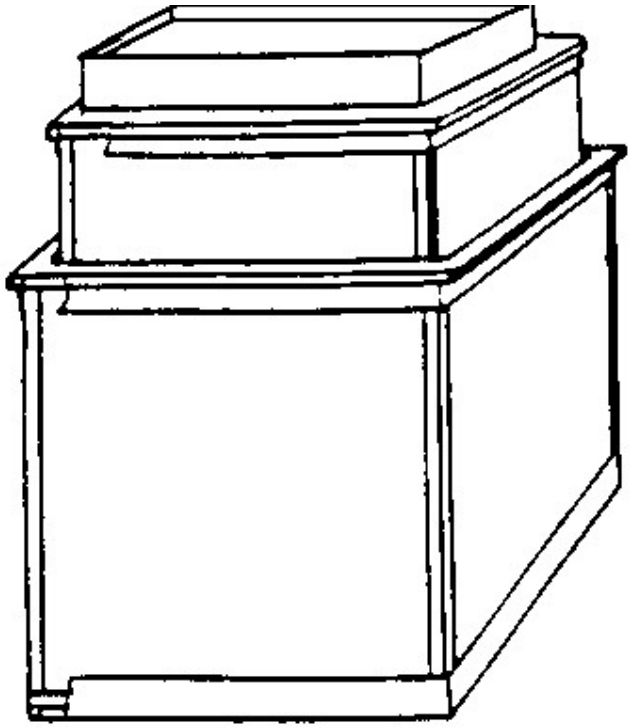

Special rules of classification within this group

The use of available Indexing Codes is mandatory.

B65D 77/046

[N: and being a tray or like shallow container]

Definition statement

This subclass/group covers:
Illustrative example of subject matter classified in this group:

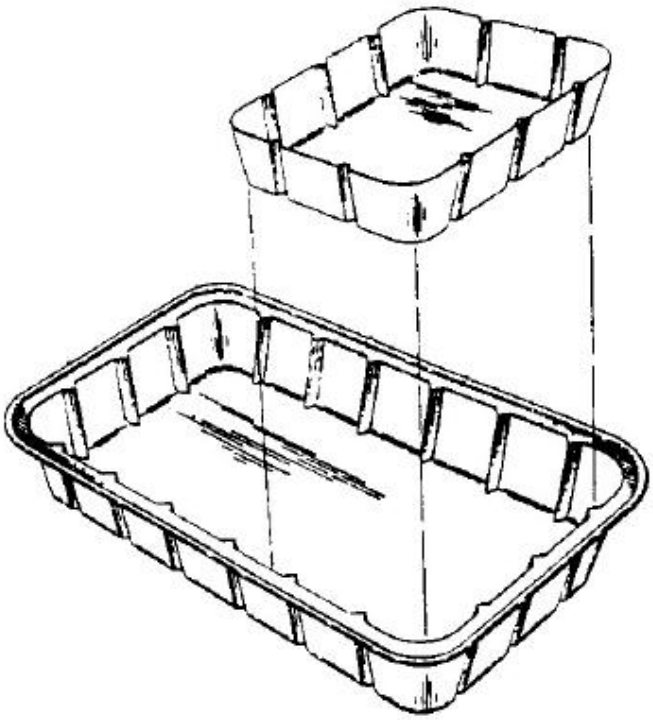

Special rules of classification within this group

The use of available Indexing Codes is mandatory.

B65D 77/0466

[N: the containers being mounted on a pallet]

Definition statement

This subclass/group covers:
Illustrative example of subject matter classified in this group:

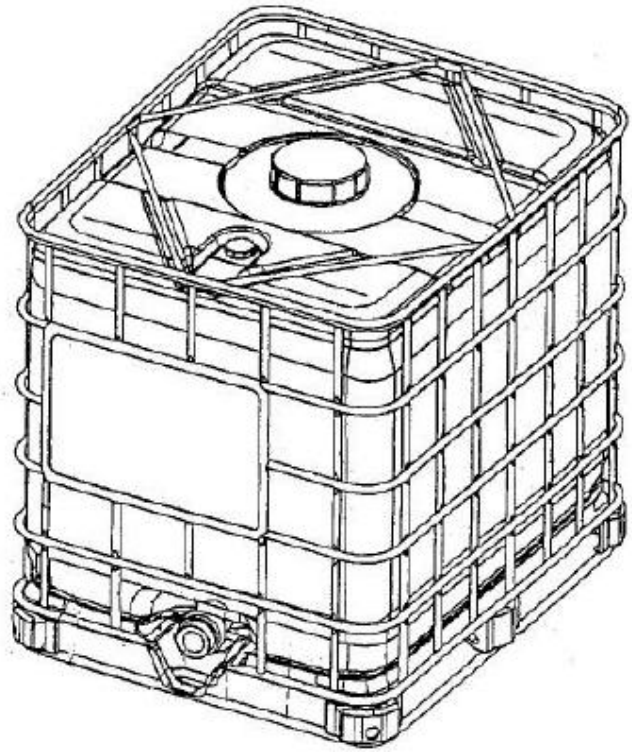

References relevant to classification in this group

This subclass/group does not cover:

Without a pallet	B65D 77/0453
Flexible container within a box pallet	B65D 77/061
Means for preventing electrostatic charges	B65D 2213/02

Special rules of classification within this group

The use of available Indexing Codes is mandatory.

B65D 77/0473

[N: the inner container being a filled deformable tube]

Definition statement

This subclass/group covers:

Illustrative example of subject matter classified in this group:

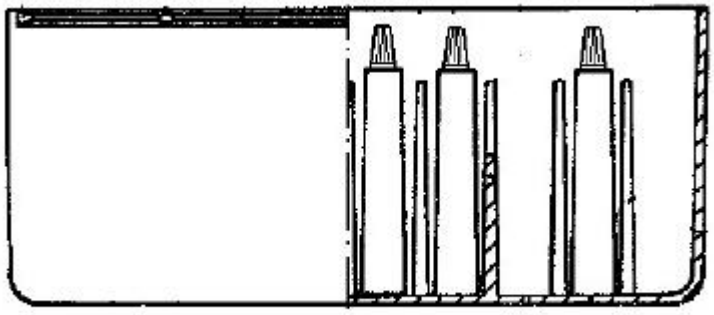

Special rules of classification within this group

The use of available Indexing Codes is mandatory.

B65D 77/048

[N: the inner and outer containers being rigid and the outer container being of curved cross-section, e.g. cylindrical (B65D 81/3825 takes precedence)]

Definition statement

This subclass/group covers:
Illustrative example of subject matter classified in this group:

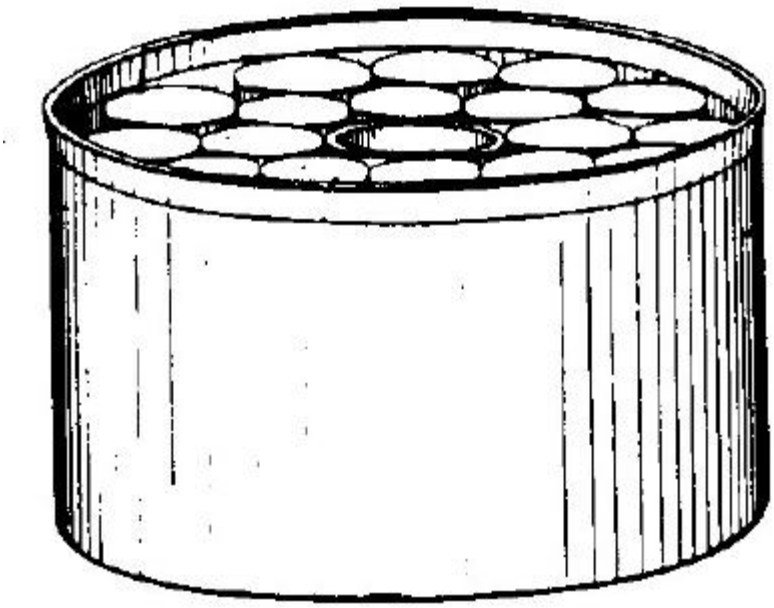

References relevant to classification in this group

This subclass/group does not cover:

Rigid or semi-rigid containers in wrapper	B65D 77/003
Wrapped articles in rigid or semi-rigid containers	B65D 77/02
Rigid or semi-rigid containers in flexible containers	B65D 77/0406
Flexible containers in rigid or semi-rigid containers	B65D 77/06

Special rules of classification within this group

The use of available Indexing Codes is mandatory.

B65D 77/0486

[N: the inner container being coaxially disposed within the outer container (B65D 81/3876 takes precedence)]

Definition statement

This subclass/group covers:

Illustrative example of subject matter classified in this group:

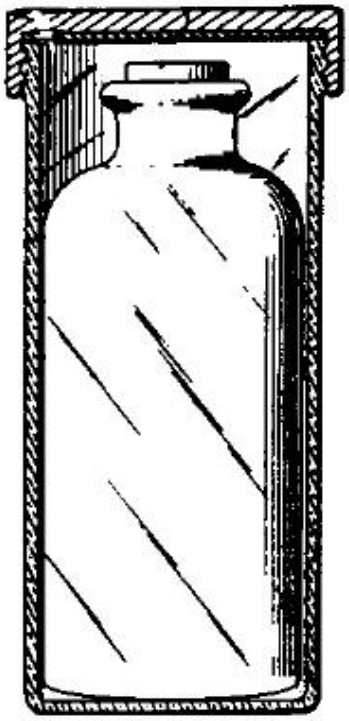

Special rules of classification within this group

The use of available Indexing Codes is mandatory.

B65D 77/0493

[N: and retained at a distance of the inner side-wall of the outer container, e.g. within a bottle neck]

Definition statement

This subclass/group covers:

Illustrative example of subject matter classified in this group:

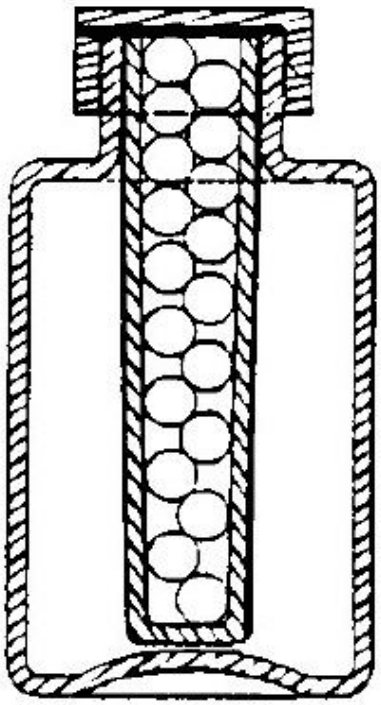

References relevant to classification in this group

This subclass/group does not cover:

Closures with auxiliary containers for additional articles or material	B65D 51/28

Special rules of classification within this group

The use of available Indexing Codes is mandatory.

B65D 77/06

Liquids or semi-liquids [N: or other materials or articles] enclosed in flexible containers disposed within rigid containers

References relevant to classification in this group

This subclass/group does not cover:

Rigid or semi-rigid containers in wrapper	B65D 77/003
Wrapped articles in rigid or semi-rigid containers	B65D 77/02

Rigid or semi-rigid containers in flexible containers	B65D 77/0406

B65D 77/061

[N: the containers being mounted on a pallet]

Definition statement

This subclass/group covers:

Illustrative example of subject matter classified in this group:

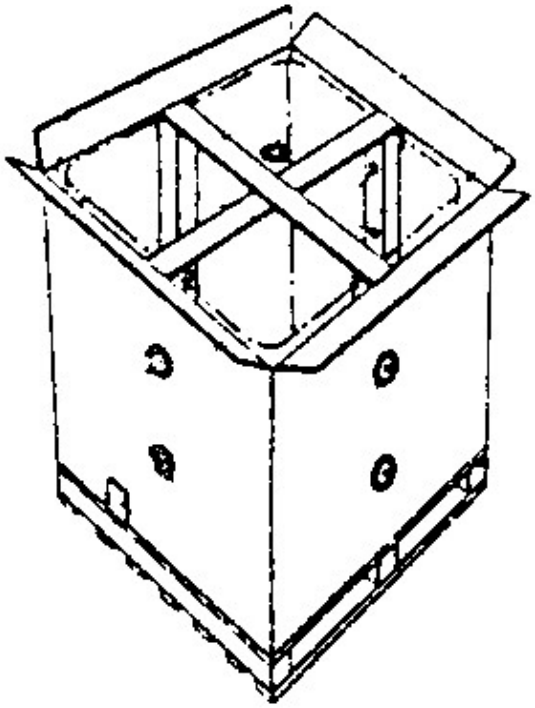

Informative references

Attention is drawn to the following places, which may be of interest for search:

External frames or supports adapted to be assembled around, or applied to, articles	B65D 61/00
Large flexible containers	B65D 88/16
Large flexible bellows-shaped containers	B65D 88/18

Large flexible containers with rigid end-walls	B65D 88/20

B65D 77/064

[N: comprising discharging means formed by cutting a part, e.g. a corner, of the flexible container]

Definition statement

This subclass/group covers:

Illustrative example of subject matter classified in this group:

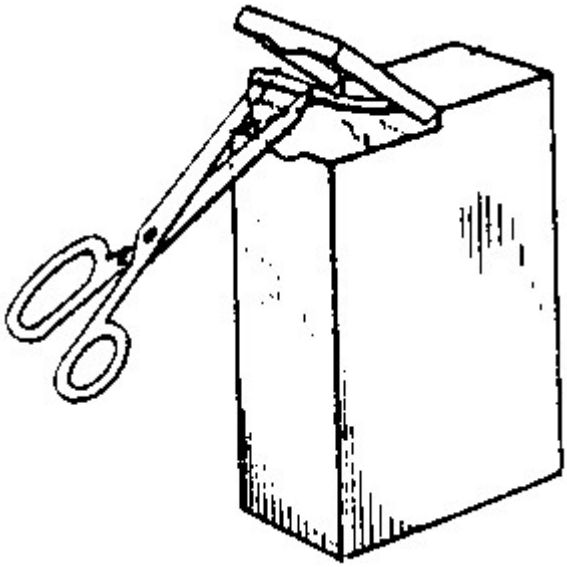

B65D 77/065

[N: Spouts, pouring necks or discharging tubes fixed to or integral with the flexible container]

Definition statement

This subclass/group covers:

Illustrative example of subject matter classified in this group:

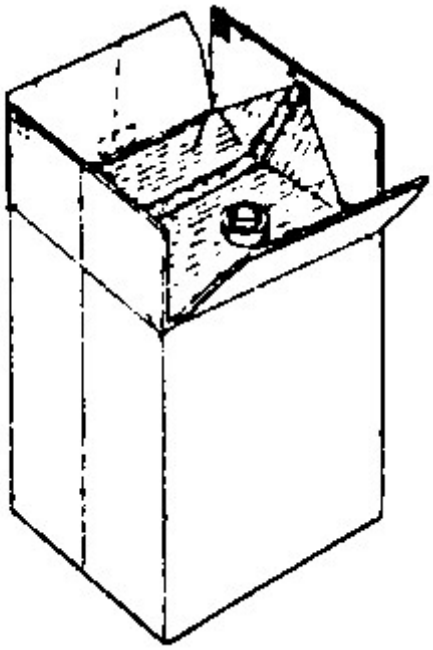

Informative references

Attention is drawn to the following places, which may be of interest for search:

Spouts	B65D 75/5861
Integral spouts	B65D 75/5866

B65D 77/067

[N: combined with a valve, a tap or a piercer]

Definition statement

This subclass/group covers:

Illustrative example of subject matter classified in this group:

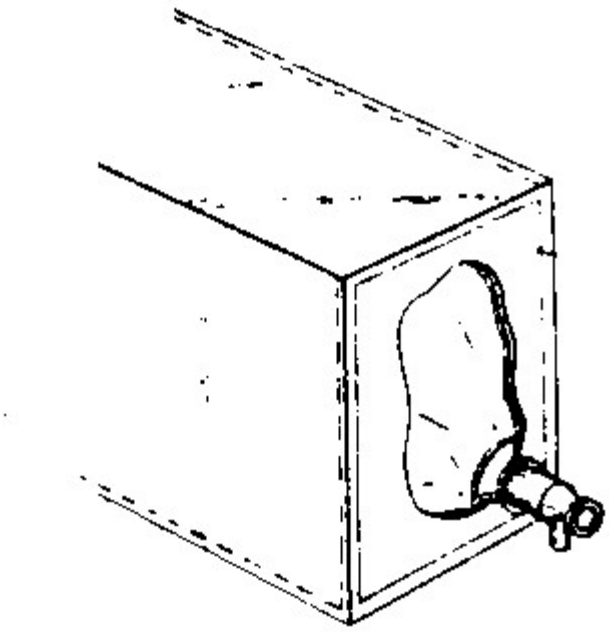

B65D 77/068

[N: Spouts formed separately from the container]

Definition statement

This subclass/group covers:
Illustrative example of subject matter classified in this group:

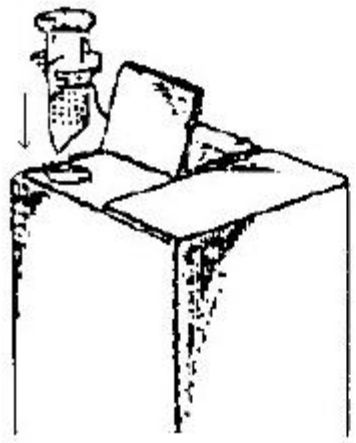

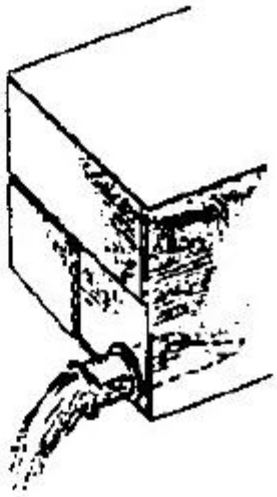

Informative references

Attention is drawn to the following places, which may be of interest for search:

Separable nozzles or spouts	B65D 25/48

B65D 77/08

Materials, e.g. different materials, enclosed in separate compartments formed during filling of a single container

Definition statement

This subclass/group covers:

Illustrative example of subject matter classified in this group:

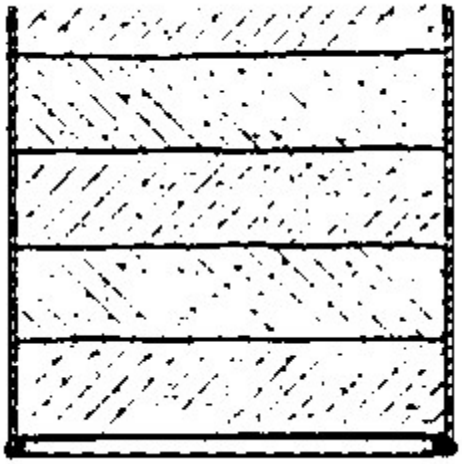

B65D 77/12

by collapsing and flattening the mouth portion of the container and securing without folding, e.g. by pressure-sensitive adhesive, heat-sealing, welding, applying a separate securing member

Definition statement

This subclass/group covers:

Illustrative example of subject matter classified in this group:

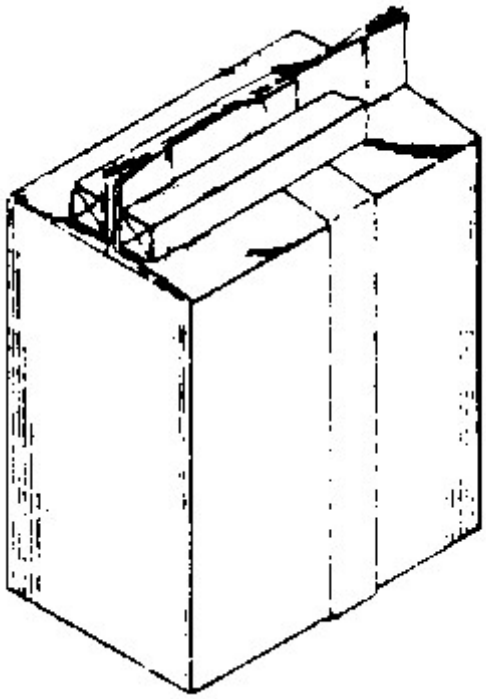

B65D 77/14

by flattening and subsequently folding or rolling the mouth portion

Definition statement

This subclass/group covers:

Illustrative example of subject matter classified in this group:

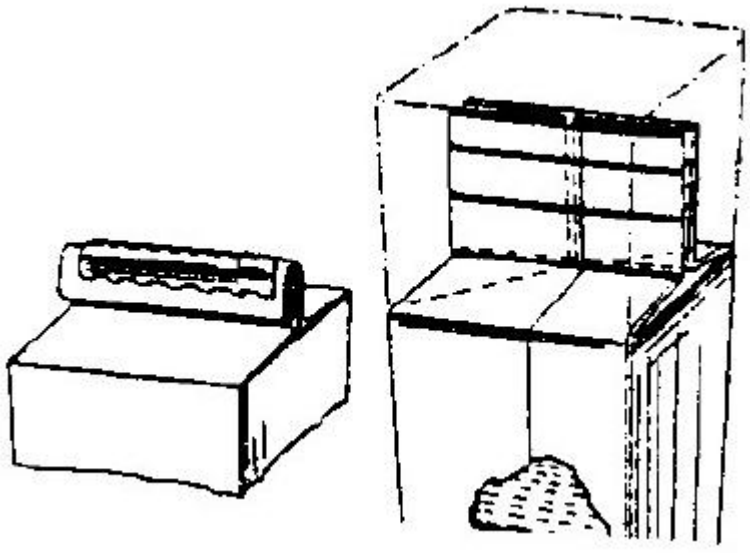

B65D 77/16

by collapsing and twisting mouth portion

Definition statement

This subclass/group covers:
Illustrative example of subject matter classified in this group:

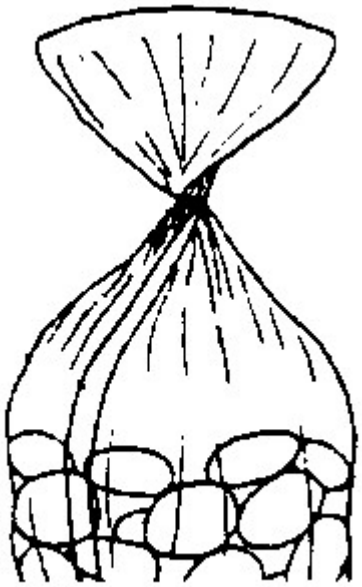

B65D 77/18

and securing by a deformable clip or binder

Definition statement

This subclass/group covers:
Illustrative example of subject matter classified in this group:

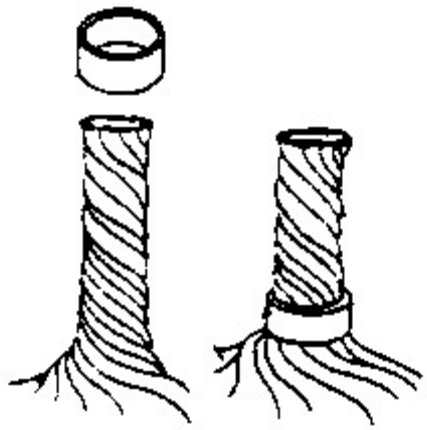

References relevant to classification in this group

This subclass/group does not cover:

For sacks	B65D 33/16
Releasable fastenings clips	F16B 2/20

B65D 77/185

[N: with means for discouraging or for indicating unauthorised opening or removal]

Definition statement

This subclass/group covers:

Illustrative example of subject matter classified in this group:

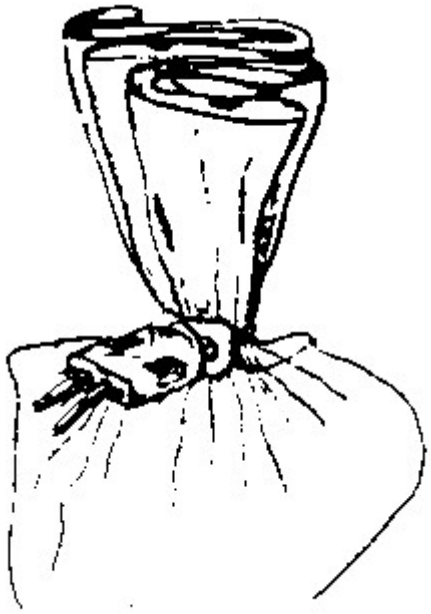

References relevant to classification in this group

This subclass/group does not cover:

Postal sacks	B65D 29/00

Informative references

Attention is drawn to the following places, which may be of interest for search:

Details of, or accessories for, sacks or bagswith special means for indicating unauthorised opening	B65D 33/34

B65D 77/20

by applying separate lids or covers, [N: i.e. flexible membrane or foil-like covers]

References relevant to classification in this group

This subclass/group does not cover:

Cover elements inserted in crates	B65D 1/246
Meshed or apertured flexible closures to allow contents to breathe	B65D 85/345

Lids or covers welded or adhered to the container	B65D 2543/00425

Informative references

Attention is drawn to the following places, which may be of interest for search:

Magnetic connections	B65D 2313/04

Special rules of classification within this group

The use of available Indexing Codes is mandatory.

B65D 77/2004

[N: the cover being maintained on the container by mechanical means, e.g. crimping, clamping, riveting (B65D 77/2024 takes precedence)]

Definition statement

This subclass/group covers:

Illustrative example of subject matter classified in this group:

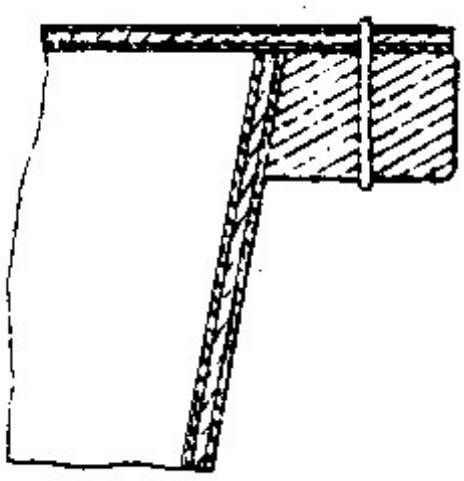

References relevant to classification in this group

This subclass/group does not cover:

Container closures formed after filling	B65D 77/2024

by applying separate lids or covers the cover being welded or adhered to the container	

Informative references

Attention is drawn to the following places, which may be of interest for search:

Containers formed by rolling, or by rolling and pressing	B65D 7/36
Closures secured by folding or rolling and pressing	B65D 17/08

Special rules of classification within this group

The use of available Indexing Codes is mandatory.

B65D 77/2008

[N: the container flange being crimped over the cover]

Definition statement

This subclass/group covers:

Illustrative example of subject matter classified in this group:

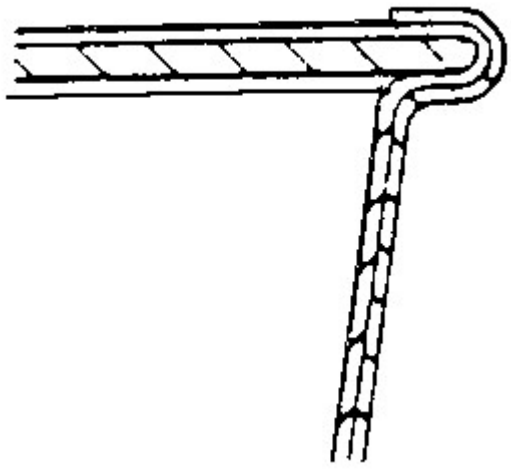

Special rules of classification within this group

The use of available Indexing Codes is mandatory.

B65D 77/2012

[N: the cover being crimped or folded over the container flange]

Definition statement

This subclass/group covers:

Illustrative example of subject matter classified in this group:

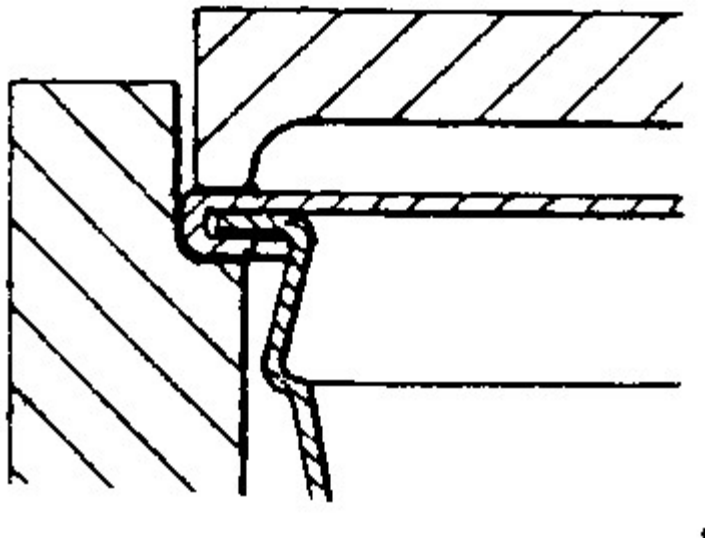

Special rules of classification within this group

The use of available Indexing Codes is mandatory.

B65D 77/2016

[N: the cover being maintained by projections or recesses on the container]

Definition statement

This subclass/group covers:

Illustrative example of subject matter classified in this group:

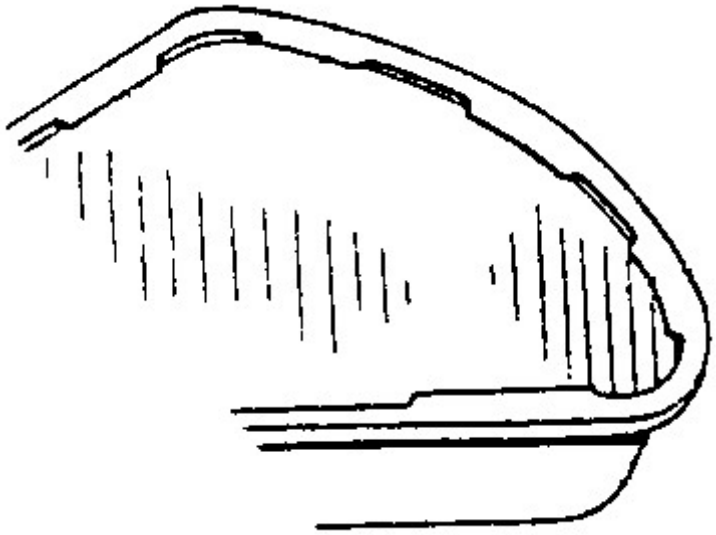

Informative references

Attention is drawn to the following places, which may be of interest for search:

Disc closures	B65D 39/02
Removable lids or covers secured by snapping over beads or projections, only on the inside, or a part turned to the inside, of the mouth	B65D 43/021

Special rules of classification within this group

The use of available Indexing Codes is mandatory.

B65D 77/202

[N: the cover being connected to the container by separate circumferential ring elements]

Definition statement

This subclass/group covers:

Illustrative example of subject matter classified in this group:

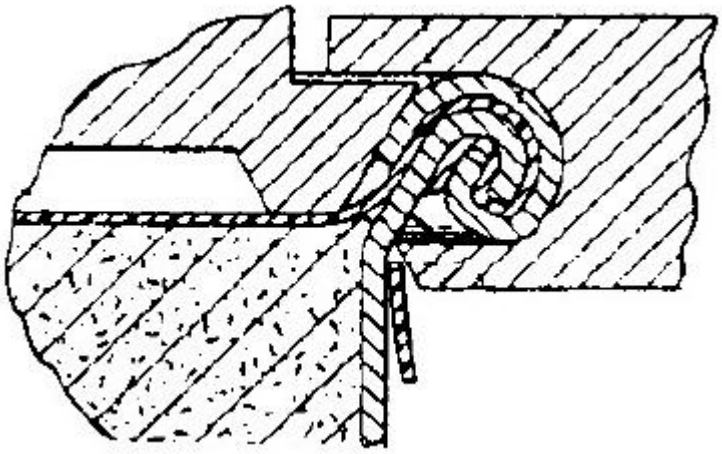

Special rules of classification within this group

The use of available Indexing Codes is mandatory.

B65D 77/204

[N: the cover having an unsealed portion for initiating removal (B65D 77/2036 takes precedence)]

References relevant to classification in this group

This subclass/group does not cover:

Means for opening the cover other than, or in addition to, a pull tab, the seal having a stress concentrating portion	B65D 77/2036

B65D 77/2044

[N: whereby a layer of the container or cover fails, e.g. cohesive failure (B65D 77/2036 takes precedence)]

References relevant to classification in this group

This subclass/group does not cover:

Means for opening the cover other than, or in addition to, a pull tab, the seal having a stress concentrating portion	B65D 77/2036

B65D 77/2048

[N: whereby part of the container or cover has been weakened, e.g. perforated or precut (B65D 77/2036 takes precedence)]

References relevant to classification in this group

This subclass/group does not cover:

Means for opening the cover other than, or in addition to, a pull tab, the seal having a stress concentrating portion	B65D 77/2036

B65D 77/225

[N: Pressure relief-valves incorporated in a container wall, e.g. valves comprising at least one elastic element]

Definition statement

This subclass/group covers:

Illustrative example of subject matter classified in this group:

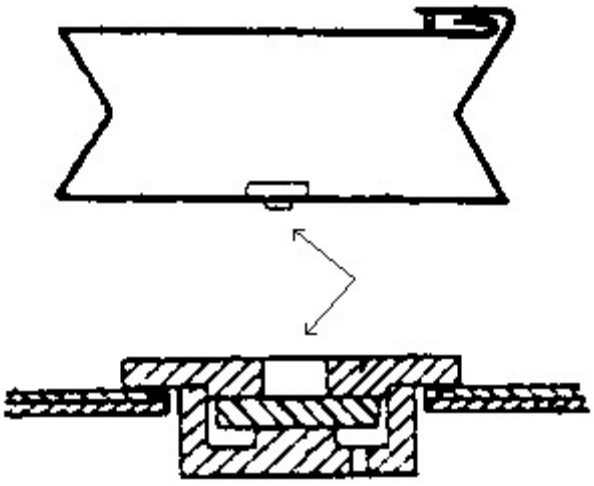

References relevant to classification in this group

This subclass/group does not cover:

Filling valves	B65D 31/14

Included in a closure	B65D 51/16

Informative references

Attention is drawn to the following places, which may be of interest for search:

Ventilation or drainage of bags	B65D 33/01
Venting air or gas with the element being a valve	B65D 51/1644
Venting means	B65D 2205/00

B65D 77/24

Inserts or accessories added or incorporated during filling of containers (opening devices B65D 77/30)

References relevant to classification in this group

This subclass/group does not cover:

- cards or coupons

Information or decoration elements	B65D 5/4212, B65D 33/004
Means for the attachment of tags	B65D 23/14
Means for the attachment of labels, cards, coupons or the like	B65D 25/205
Closures provided with decoration, information or contents indicating devices, labels	B65D 51/245
Cards, coupons, or other inserts or accessories	B65D 75/54

Informative references

Attention is drawn to the following places, which may be of interest for search:

Inserts or accessories added or	B65D 85/1081

joined to the container	

B65D 77/245

[N: Utensils for removing the contents from the package, e.g. spoons, forks, spatulas (B65D 77/28 takes precedence)]

Definition statement

This subclass/group covers:

Illustrative example of subject matter classified in this group:

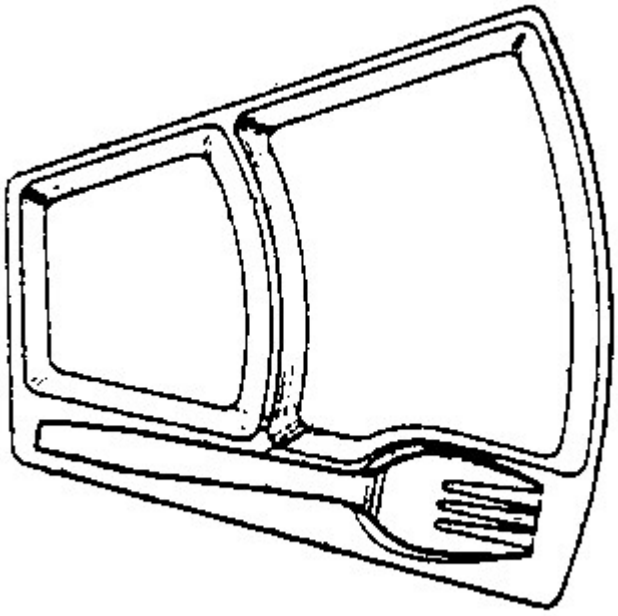

References relevant to classification in this group

This subclass/group does not cover:

Lids with eating utensils or spatulas	B65D 51/246
Cards, coupons, or drinking straws	B65D 77/28
Utensils per se	A47G 21/00
Spoon-shaped dispensing spouts for administering medicine	A61J 7/0015
Measuring spoons per se	A61J 7/0015, G01F 19/002

Informative references

Attention is drawn to the following places, which may be of interest for search:

Utensils attached to trays, cups, etc.	A47G 19/06

B65D 77/26

Elements or devices for locating or protecting articles

Definition statement

This subclass/group covers:

Illustrative example of subject matter classified in this group:

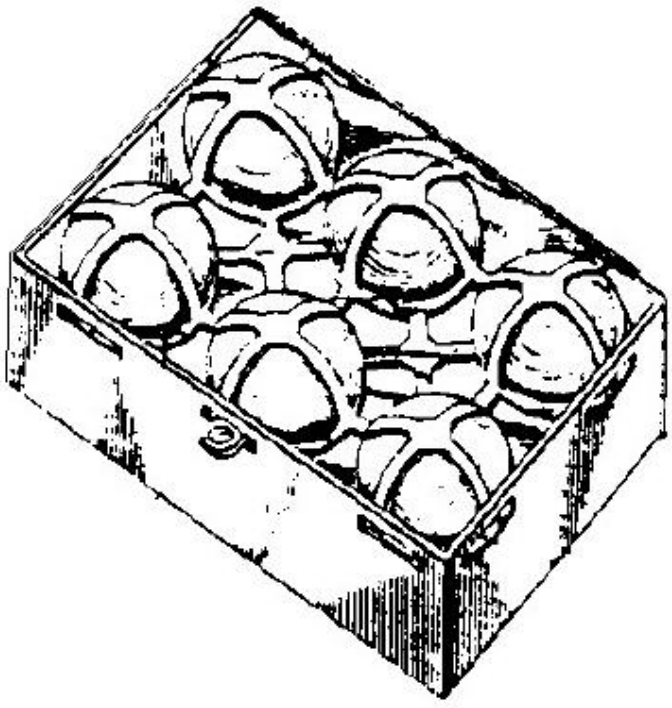

References relevant to classification in this group

This subclass/group does not cover:

Internal heat-shrinkable sheets for maintaining the contents	B65D 5/5028

Informative references

Attention is drawn to the following places, which may be of interest for search:

Internal heat-shrinkable sheets for maintaining the contents	B65D 5/5028
Devices to locate articles in containers	B65D 25/10

B65D 77/28

Cards, coupons, or drinking straws [N: (B65D 5/4212, B65D 23/14, B65D 25/205, B65D 33/004, B65D 51/245, B65D 75/54 take precedence)]

Definition statement

This subclass/group covers:

Illustrative example of subject matter classified in this group:

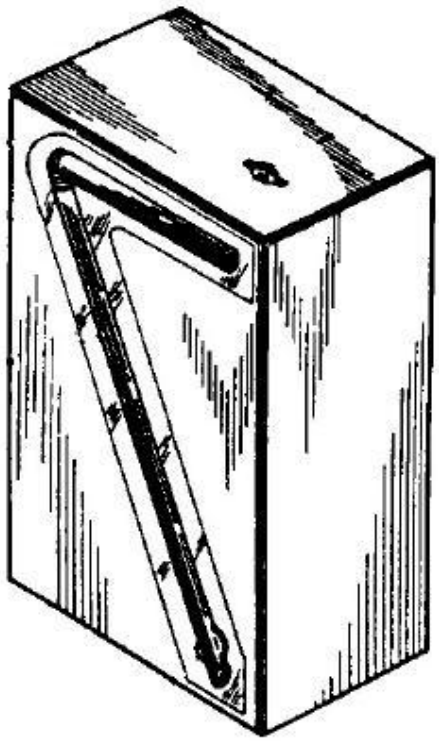

References relevant to classification in this group

This subclass/group does not cover:

Construction of the drinking straws	A47G 21/18

per se	
Means for the attachment of tags	B65D 23/14
Means for the attachment of labels, cards, coupons or the like	B65D 25/205
Details of, or accessories for, sacks or bags, information or decoration elements	B65D 33/004
Covers for drinking cups having means, e.g. weakened zones, for inserting a drinking straw (without means for the attachment of the drinking straw to the container):	B65D 47/36, B65D 2231/02
Details of containers or of foldable or erectable container blanks, information or decoration elements	B65D 5/4212
Closures provided with decoration, information or contents indicating devices, labels	B65D 51/245
Cards, coupons, or other inserts or accessories	B65D 75/54
Attached or integral utensils for removing the contents, e.g. forks, spoons, spatulas	B65D 77/245
Containers with means for inserting a drinking straw (without means for the attachment of the drinking straw to the container): relevant group for the container construction +	B65D 2231/02
Beverage cans incorporating a drinking straw	B65D 2517/0049

B65D 77/283

[N: located initially inside the container, whereby the straw is revealed only upon opening the container, e.g. pop-up straws]

Definition statement

This subclass/group covers:

Illustrative example of subject matter classified in this group:

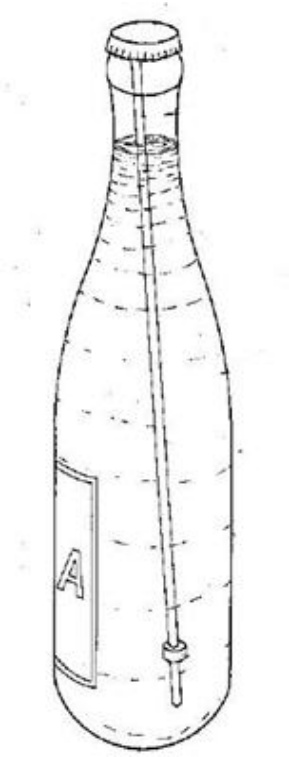

B65D 77/286

[N: formed integrally with the container (containers having integrally formed tubes with contents expelled by deforming the container B65D 1/326)]

Definition statement

This subclass/group covers:

Illustrative example of subject matter classified in this group:

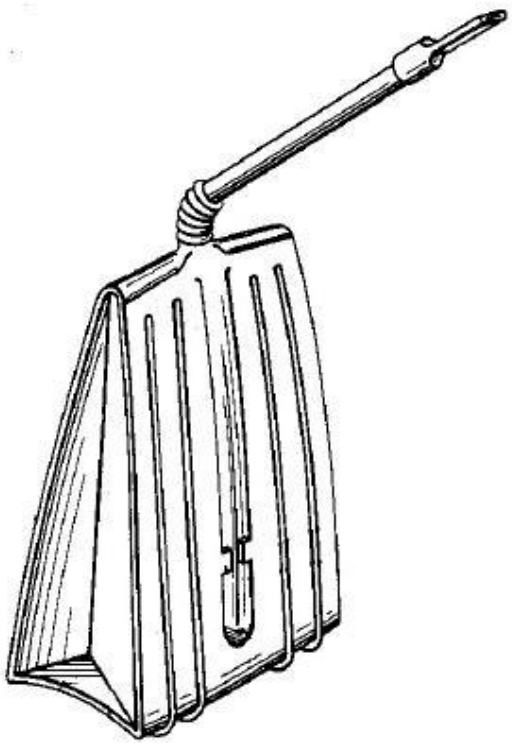

References relevant to classification in this group

This subclass/group does not cover:

Containers having integrally formed tubes with contents expelled by deforming the container	B65D 1/326

Informative references

Attention is drawn to the following places, which may be of interest for search:

Integral or attached nozzles or spouts	B65D 25/42
Closures with filling and discharging, or with discharging, devices the spout being either flexible or having a flexible wall portion, whereby the spout is foldable between a dispensing and a non-dispensing position	B65D 47/066
Integral spouts	B65D 75/5866

B65D 77/30

Opening or contents-removing devices added or incorporated during filling or closing of containers [N: (B65D 77/20 takes precedence)]

References relevant to classification in this group

This subclass/group does not cover:

Container closures formed after filling by applying separate lids or covers	B65D 77/20

B65D 77/32

Tearing-strings or like flexible elements

Definition statement

This subclass/group covers:

Illustrative example of subject matter classified in this group:

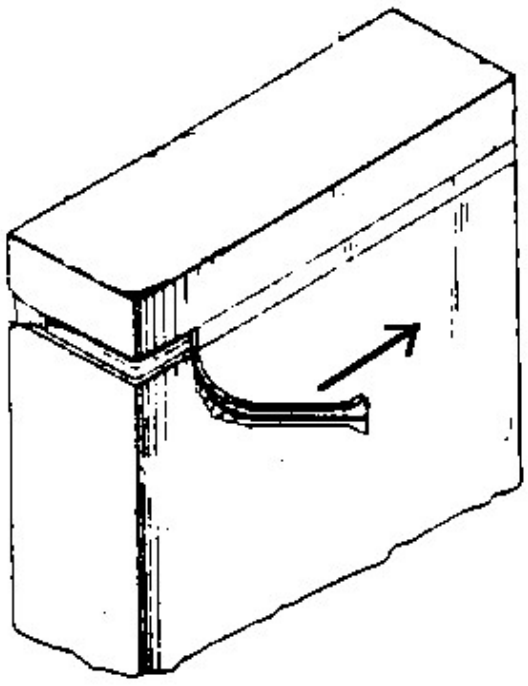

Informative references

Attention is drawn to the following places, which may be of interest for search:

Tearing-strings or -strips	B65D 27/38

Inserted or applied tearing-strings or like flexible elements	B65D 75/66
Opening devices	B65D 85/1027

B65D 77/34

enclosed in a mouth seal

Definition statement

This subclass/group covers:

Illustrative example of subject matter classified in this group:

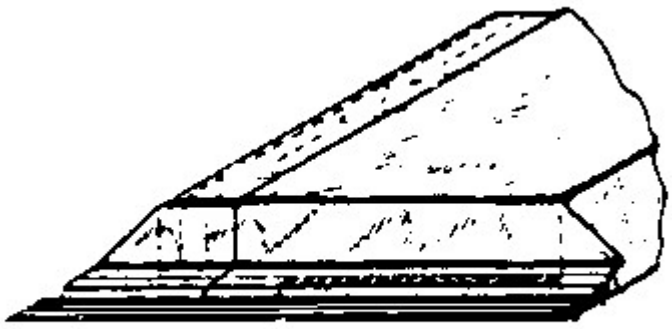

B65D 77/36

disposed beneath a wrapper, label, or other element of sheet material securing a lid, cover, or container mouth

Definition statement

This subclass/group covers:

Illustrative example of subject matter classified in this group:

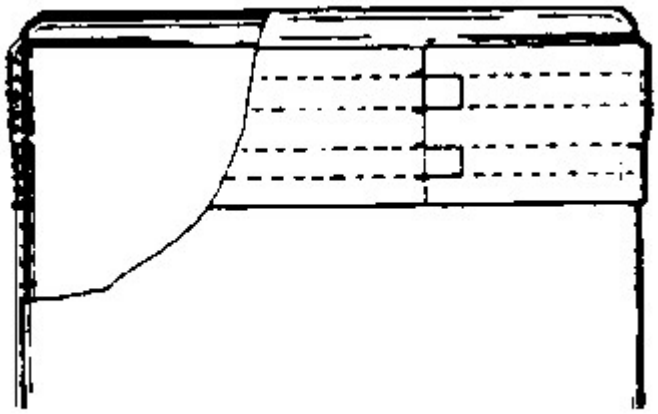

Informative references

Attention is drawn to the following places, which may be of interest for search:

Destructible or permanently removable bands	B65D 55/0818

B65D 77/38

Weakened closure seams

Definition statement

This subclass/group covers:

Illustrative example of subject matter classified in this group:

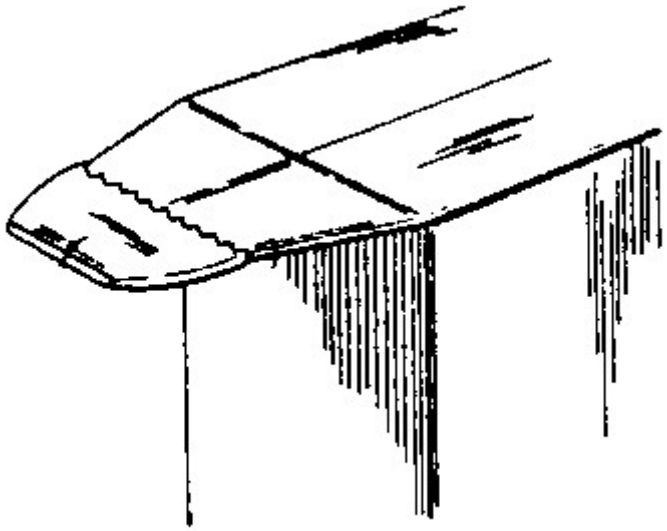

B65D 77/40

Rigid cutting or tearing devices

Definition statement

This subclass/group covers:
Illustrative example of subject matter classified in this group:



Informative references

Attention is drawn to the following places, which may be of interest for search:

Rigid cutting or tearing devices	B65D 75/70

B65D 79/005

[N: Containers or closures having deformable parts for indicating or neutralising internal pressure-variations]

Definition statement

This subclass/group covers:
Illustrative example of subject matter classified in this group:

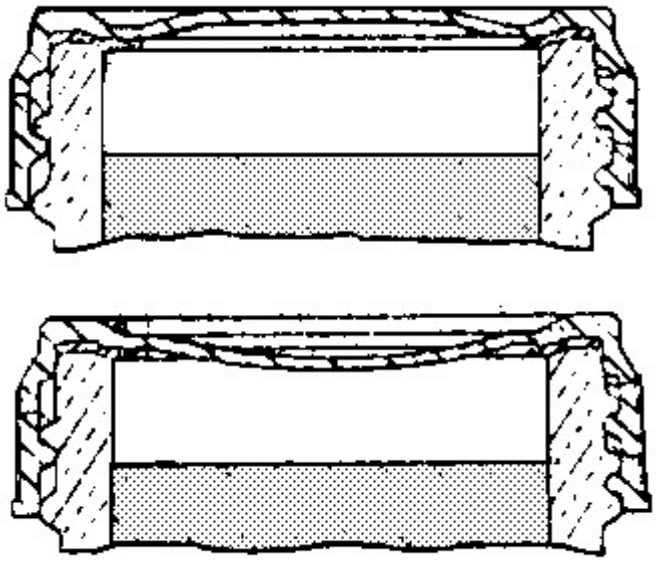

B65D 79/00C

[N: Packages with special means for effervescing the contents, e.g. for forming bubbles]

References relevant to classification in this group

This subclass/group does not cover:

Pressure regulators for aerosols	**B65D83/14N1**

B65D 79/02

Arrangements or devices for indicating incorrect storage or transport ([N: B65D 79/005 takes precedence]; measuring devices G01)

Definition statement

This subclass/group covers:

Illustrative example of subject matter classified in this group:

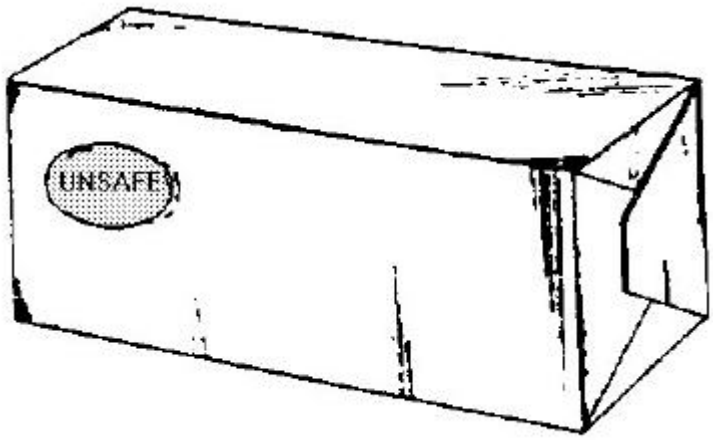

References relevant to classification in this group

This subclass/group does not cover:

Tamper-evident devices	B65D 55/02
Containers or closures having deformable parts for indicating or neutralising internal pressure-variations	B65D 79/005
Time or temperature indicators	G01K 3/04
Chemical indicators for investigating time/temperature history	G01N 31/229

B65D 81/00

Containers, packaging elements, or packages, for contents presenting particular transport or storage problems, or adapted to be used for non-packaging purposes after removal of contents

Special rules of classification within this group

ALSO USED AS Indexing Code

B65D 81/022

[N: Containers made of shock-absorbing material (B65D 81/03 takes precedence; for thermal insulating purposes B65D

81/3813)]

Definition statement

This subclass/group covers:
Illustrative example of subject matter classified in this group:

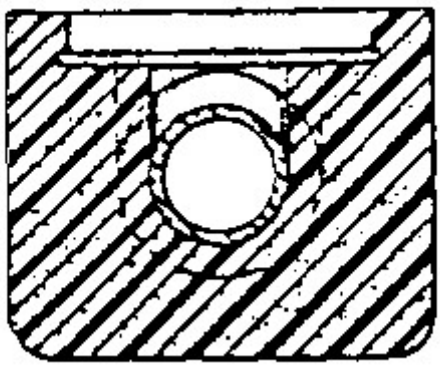

References relevant to classification in this group

This subclass/group does not cover:

Wrappers or envelopes with shock-absorbing properties	B65D 81/03

Special rules of classification within this group

ALSO USED AS Indexing Code

B65D 81/025

[N: Containers made of sheet-like material and having a shape to accommodate contents]

Definition statement

This subclass/group covers:
Illustrative example of subject matter classified in this group:

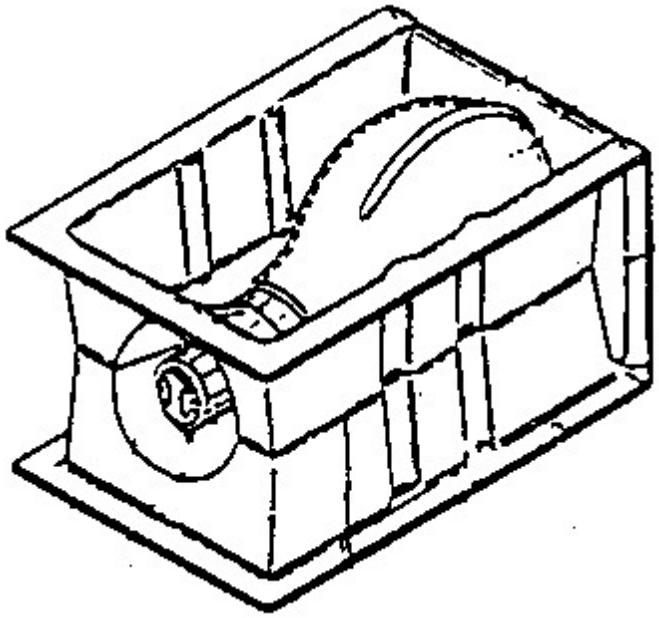

Special rules of classification within this group

ALSO USED AS Indexing Code

B65D 81/027

[N: double-walled (for thermal insulating purposes B65D 81/3818, B65D 81/383)]

Definition statement

This subclass/group covers:
Illustrative example of subject matter classified in this group:

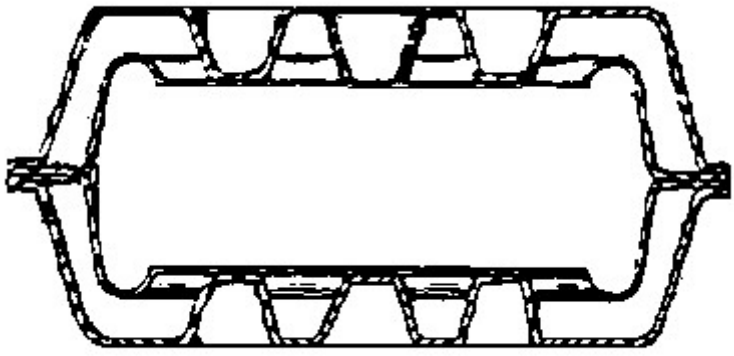

B65D 81/03

Wrappers or envelopes with shock-absorbing properties, e.g. bubble films [N: (for thermal insulating purposes B65D 81/3888)]

Definition statement

This subclass/group covers:

Illustrative example of subject matter classified in this group:

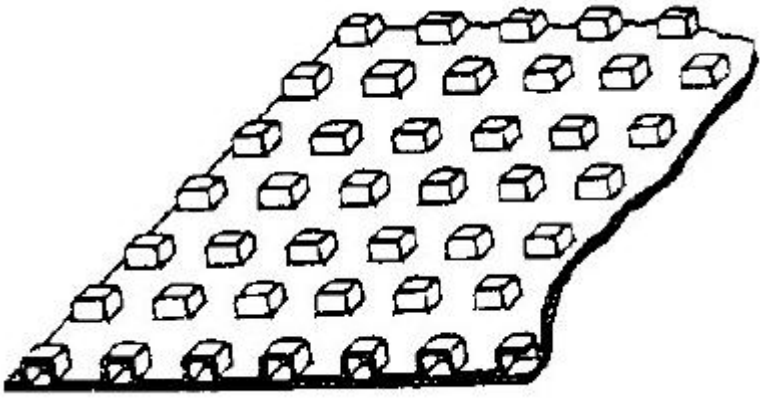

Special rules of classification within this group

ALSO USED AS Indexing Code

B65D 81/05

maintaining contents at spaced relation from package walls, or from other contents ([N: B65D 81/022, B65D 81/025,] B65D 81/03 take precedence)

References relevant to classification in this group

This subclass/group does not cover:

Made of paper	B65D 5/5035
Containers maintaining the contents in an upright position, e.g. using a gyroscopic system	B65D 81/00
Containers made of shock-absorbing material	B65D 81/022
Containers made of sheet-like material and having a shape to accommodate contents	B65D 81/025

Wrappers or envelopes with shock-absorbing properties	B65D 81/03

Special rules of classification within this group

ALSO USED AS Indexing Code

B65D 81/051

[N: using pillow-like elements filled with cushioning material, e.g. elastic foam, fabric]

Definition statement

This subclass/group covers:
Illustrative example of subject matter classified in this group:

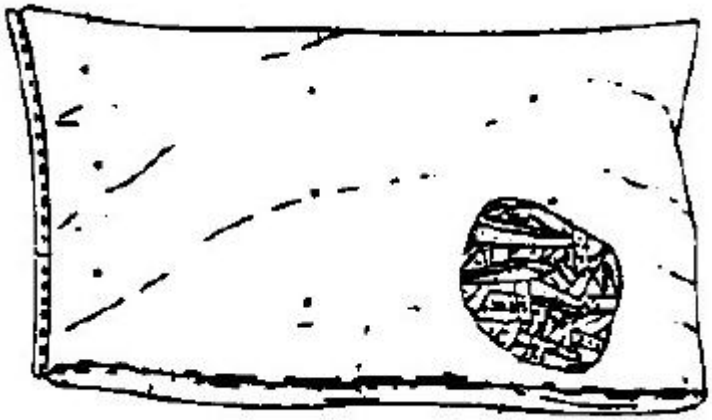

Special rules of classification within this group

ALSO USED AS Indexing Code

B65D 81/052

[N: filled with fluid, e.g. inflatable elements]

Definition statement

This subclass/group covers:
Illustrative example of subject matter classified in this group:

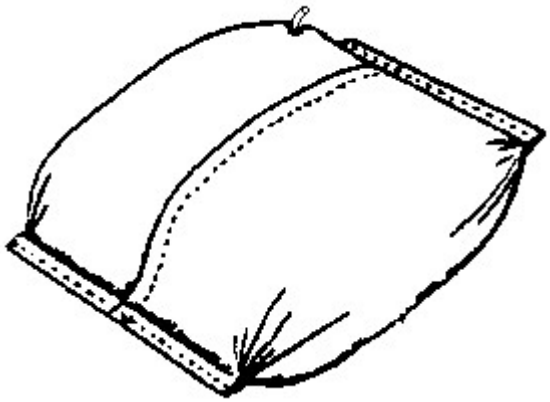

References relevant to classification in this group

This subclass/group does not cover:

Inflatable fittings for suitcases	A45C 13/02
Inflatable mattresses	A47C 27/08
Inflatable pillows	A47G 9/1027

Informative references

Attention is drawn to the following places, which may be of interest for search:

Individual packages cut from webs or tubescontaining liquids, semi-liquids, or pastes	B65D 75/48

Special rules of classification within this group

ALSO USED AS Indexing Code

B65D 81/053

[N: Corner, edge or end protectors]

Definition statement

This subclass/group covers:

Illustrative example of subject matter classified in this group:

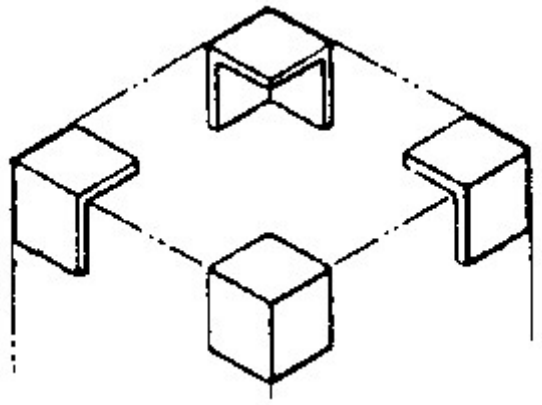

Informative references

Attention is drawn to the following places, which may be of interest for search:

Reinforcements formed separately from the container	B65D 5/445
Corner pads or corner posts	B65D 5/5033
Capping elements	B65D 5/5069
Arrangements of flexible binders, with protecting or supporting elements arranged between binder and articles or materials	B65D 71/04

Special rules of classification within this group

ALSO USED AS Indexing Code

This group is being reorganized, contact C.Pernice.

B65D 81/054

[N: Protectors contacting two generally perpendicular surfaces of the packaged article, e.g. edge protectors (B65D 81/055 takes precedence)]

References relevant to classification in this group

This subclass/group does not cover:

Protectors contacting three surfaces of the packaged article	B65D 81/055

B65D 81/055

[N: Protectors contacting three surfaces of the packaged article, e.g. three-sided edge protectors (B65D 81/058 takes precedence)]

References relevant to classification in this group

This subclass/group does not cover:

Protectors contacting five surfaces of the packaged article	B65D 81/055

B65D 81/07

using resilient suspension means [N: (B65D 81/051 takes precedence)]

Definition statement

This subclass/group covers:

Illustrative example of subject matter classified in this group:

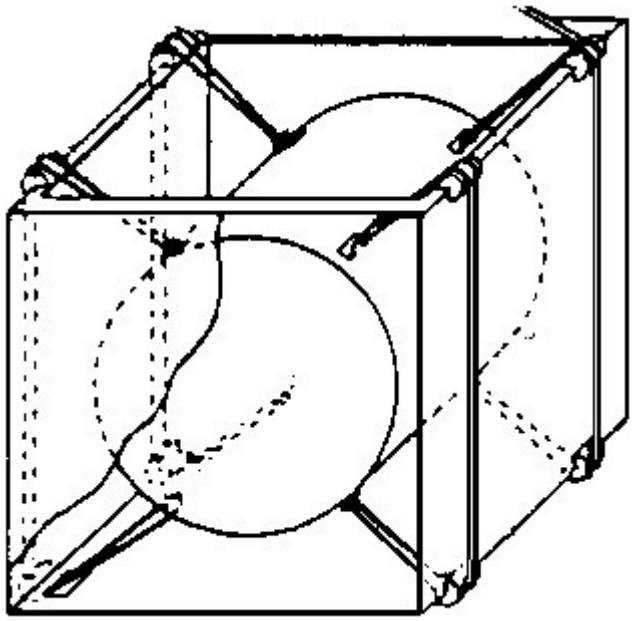

References relevant to classification in this group

This subclass/group does not cover:

Internal heat-shrinkable sheets for maintaining the contents in paper boxes	B65D 5/5028
Containers maintaining contents at spaced relation from package walls, or from other contents using pillow-like elements filled with cushioning material	B65D 81/051

Special rules of classification within this group

ALSO USED AS Indexing Code

B65D 81/075

[N: the contents being located between two membranes stretched between opposed sides of the package]

Definition statement

This subclass/group covers:

Illustrative example of subject matter classified in this group:

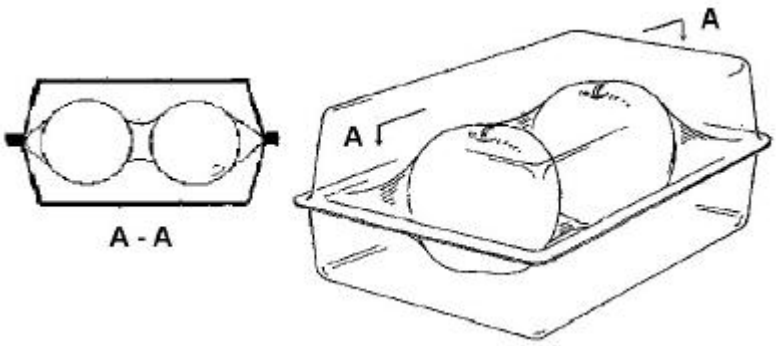

Special rules of classification within this group

ALSO USED AS Indexing Code

B65D 81/09

using flowable discrete elements of shock-absorbing material, e.g. pellets, popcorn [N: (B65D 81/051 takes precedence)]

Definition statement

This subclass/group covers:

Illustrative example of subject matter classified in this group:

References relevant to classification in this group

This subclass/group does not cover:

Containers maintaining contents at spaced relation from package walls, or from other contents using pillow-like elements filled with cushioning material	B65D 81/051

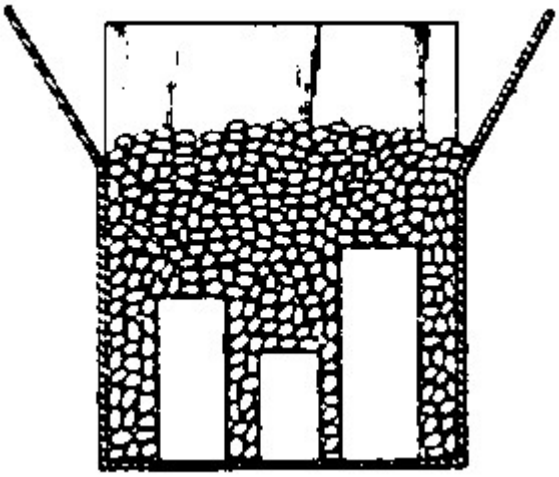

Special rules of classification within this group

ALSO USED AS Indexing Code

B65D 81/107

using blocks of shock-absorbing material

Definition statement

This subclass/group covers:

Illustrative example of subject matter classified in this group:

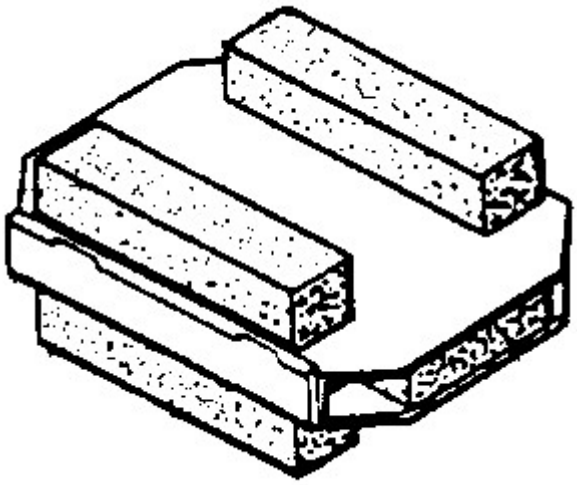

References relevant to classification in this group

This subclass/group does not cover:

Blocking the drums of washing machines	D06F 39/001

Special rules of classification within this group

ALSO USED AS Indexing Code

B65D 81/1075

[N: deformable to accommodate contents]

Definition statement

This subclass/group covers:

Illustrative example of subject matter classified in this group:



Special rules of classification within this group

ALSO USED AS Indexing Code

B65D 81/113

of a shape specially adapted to accommodate contents [N: (B65D 81/053 takes precedence)]

Definition statement

This subclass/group covers:

Illustrative example of subject matter classified in this group:

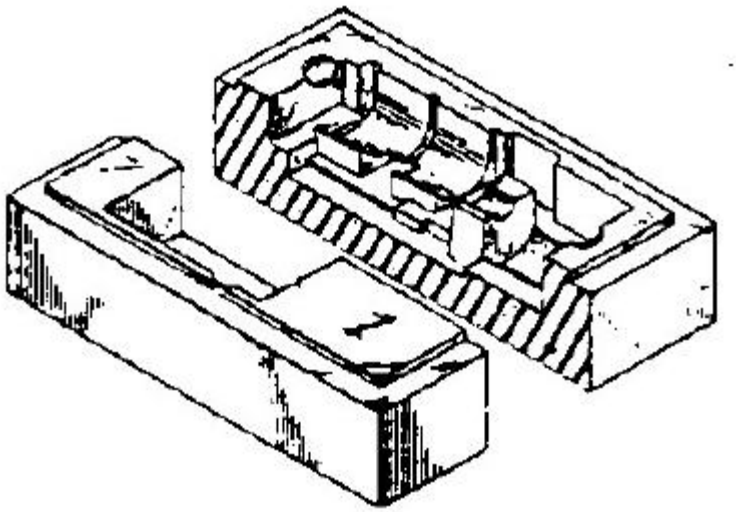

References relevant to classification in this group

This subclass/group does not cover:

Corner, edge or end protectors	B65D 81/053

Special rules of classification within this group

ALSO USED AS Indexing Code

B65D 81/127

using rigid or semi-rigid sheets of shock-absorbing material [N: (B65D 81/025 takes precedence)]

Definition statement

This subclass/group covers:

Illustrative example of subject matter classified in this group:

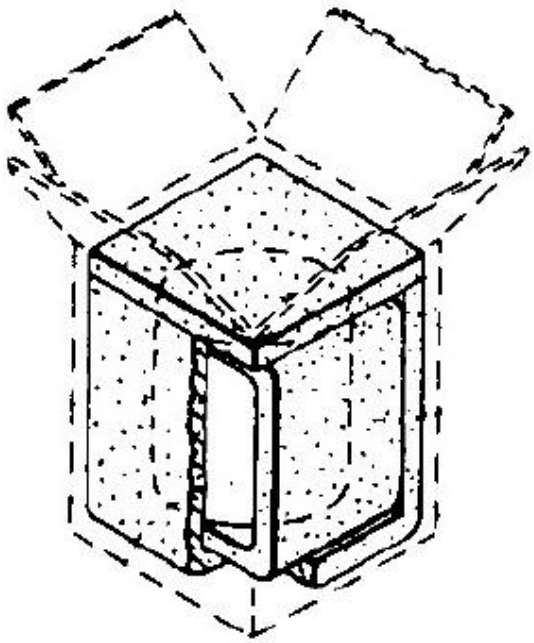

References relevant to classification in this group

This subclass/group does not cover:

Containers made of sheet-like material and having a shape to	B65D 81/025

accommodate contents	

Special rules of classification within this group

ALSO USED AS Indexing Code

B65D 81/1275

[N: laminated or bonded to the inner wall of a container (for thermal insulating purposes B65D 81/3858)]

Definition statement

This subclass/group covers:

Illustrative example of subject matter classified in this group:

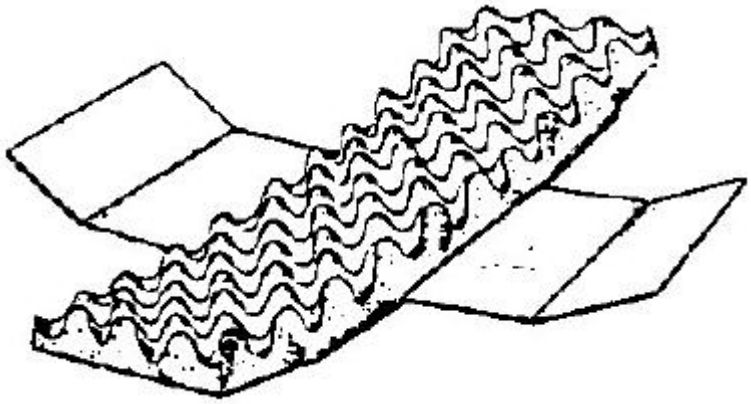

Special rules of classification within this group

ALSO USED AS Indexing Code

B65D 81/133

of a shape specially adapted to accommodate contents, e.g. trays [N: (B65D 81/053 takes precedence; thermally insulated trays B65D 81/3816, B65D 81/3827)]

Definition statement

This subclass/group covers:

Illustrative example of subject matter classified in this group:

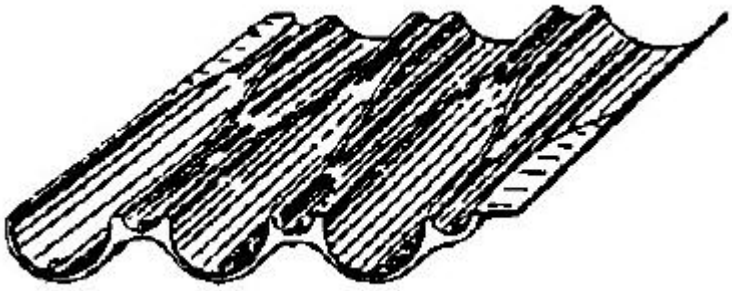

References relevant to classification in this group

This subclass/group does not cover:

Corner, edge or end protectors	B65D 81/053

Informative references

Attention is drawn to the following places, which may be of interest for search:

Tray-like elements formed in one piece	B65D 5/503
Devices to locate articles in containers	B65D 25/10

Special rules of classification within this group

ALSO USED AS Indexing Code

B65D 81/20

under vacuum or superatmospheric pressure, or in a special atmosphere, e.g. of inert gas [N: (B65D 81/28 takes precedence; containers with pressurising means for maintaining ball pressure A63B 39/025)]

Definition statement

This subclass/group covers:

Illustrative example of subject matter classified in this group:

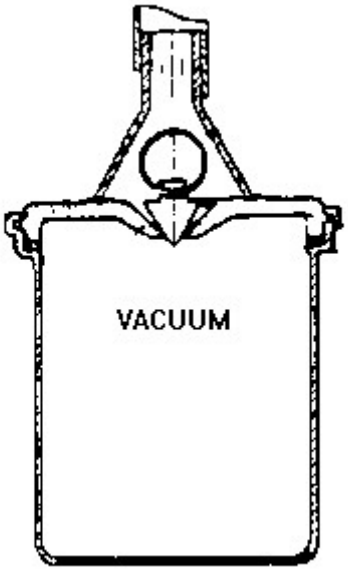

References relevant to classification in this group

This subclass/group does not cover:

Pumping means for creating a vacuum or super-pressure	B65B 31/00
Placing in such a container	B65B 31/02
Pressure-relief valves	B65D 31/14, B65D 77/225
Containers or closures having deformable parts for indicating or neutralising changes of internal pressure	B65D 79/005
Applications of food preservatives, fungicides, pesticides, or animal repellents	B65D 81/28

Special rules of classification within this group

ALSO USED AS Indexing Code

B65D 81/2007

[N: under vacuum]

References relevant to classification in this group

This subclass/group does not cover:

Containers for several uses, e.g. for contents under vacuum or in a special atmosphere	B65D 81/20

Special rules of classification within this group

ALSO USED AS Indexing Code

B65D 81/2015

[N: in an at least partially rigid container (B65D 81/2038 takes precedence)]

References relevant to classification in this group

This subclass/group does not cover:

Containers for several uses, e.g. for contents under vacuum or in a special atmosphere with means for establishing or improving vacuum	B65D 81/2038

Special rules of classification within this group

ALSO USED AS Indexing Code

B65D 81/2023

[N: in a flexible container (B65D 81/2038 takes precedence)]

References relevant to classification in this group

This subclass/group does not cover:

Containers for several uses, e.g. for contents under vacuum or in a special atmosphere with means for establishing or improving vacuum	B65D 81/2038

Special rules of classification within this group

ALSO USED AS Indexing Code

B65D 81/2046

[N: under superatmospheric pressure (B65D 81/2069 takes precedence)]

References relevant to classification in this group

This subclass/group does not cover:

Containers for several uses, e.g. for contents under vacuum or in a special atmosphere	B65D 81/00
Containers for several uses, e.g. for contents under vacuum and in a special atmosphere	B65D 81/2069

Special rules of classification within this group

ALSO USED AS Indexing Code

B65D 81/2061

[N: in a flexible container]

Informative references

Attention is drawn to the following places, which may be of interest for search:

Flexible containers in rigid containers if the vacuum is in the flexible one	B65D 81/2023

Special rules of classification within this group

ALSO USED AS Indexing Code

B65D 81/2069

[N: in a special atmosphere]

References relevant to classification in this group

This subclass/group does not cover:

Containers for several uses, e.g. for contents under vacuum or in a special atmosphere	B65D 81/20

Special rules of classification within this group

ALSO USED AS Indexing Code

B65D 81/22

in moist conditions or immersed in liquids

Definition statement

This subclass/group covers:
Illustrative example of subject matter classified in this group:

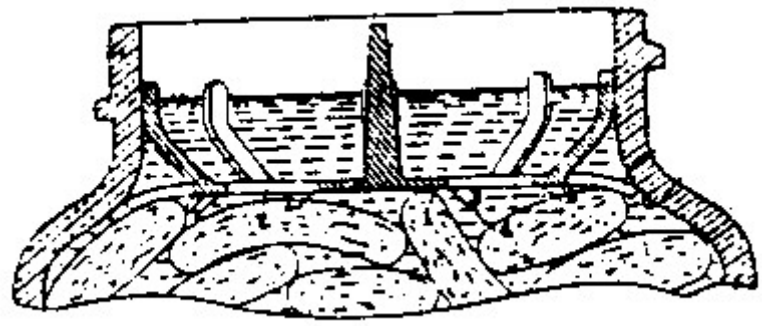

Informative references

Attention is drawn to the following places, which may be of interest for search:

Contact lenses immersed in liquid	B65D 2585/545

Special rules of classification within this group

ALSO USED AS Indexing Code

B65D 81/24

Adaptations for preventing deterioration or decay of contents; Applications to the container or packaging material of food preservatives, fungicides, pesticides or animal repellants

(with thermal insulation B65D 81/38)

References relevant to classification in this group

This subclass/group does not cover:

Anti-bacterial filters placed on venting apertures in deformable containers	B05B 11/0016, B05B 11/04

Informative references

Attention is drawn to the following places, which may be of interest for search:

Inserts or accessories added or joined to the container	B65D 85/1081

Special rules of classification within this group

ALSO USED AS Indexing Code

B65D 81/245

[N: Internal membrane, floating cover or the like isolating the contents from the ambient atmosphere (loosely-attached linings B65D 25/16; dispensing pistons B65D 83/0005; flexible bags for expelling the contents B65D 83/0055)]

Definition statement

This subclass/group covers:

Illustrative example of subject matter classified in this group:

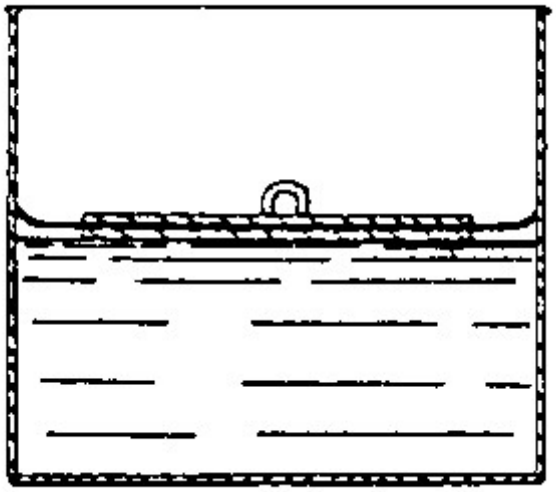

References relevant to classification in this group

This subclass/group does not cover:

Floating covers in large containers	B65D 88/34

Special rules of classification within this group

ALSO USED AS Indexing Code

B65D 81/26

with provision for draining away, or absorbing, [N: or removing by ventilation,] fluids, e.g. exuded by contents; [N: (B65D 33/01 takes precedence)]; Applications of corrosion inhibitors or desiccators

References relevant to classification in this group

This subclass/group does not cover:

Drainage of bags	B65D 33/01

Special rules of classification within this group

ALSO USED AS Indexing Code

B65D 81/261

[N: for draining or collecting liquids without absorbing them]

Definition statement

This subclass/group covers:
Illustrative example of subject matter classified in this group:



Special rules of classification within this group

ALSO USED AS Indexing Code

B65D 81/262

[N: Rigid containers having false bottoms provided with passages for draining and receiving liquids]

Definition statement

This subclass/group covers:
Illustrative example of subject matter classified in this group:

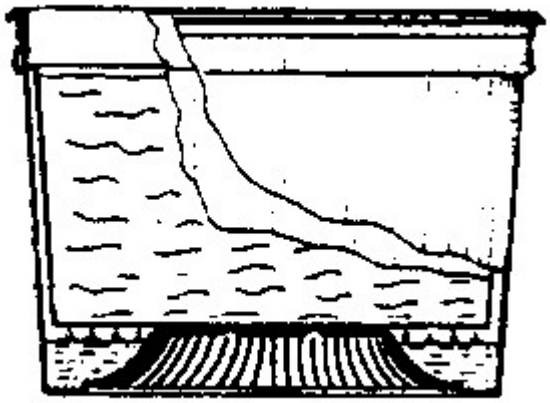

References relevant to classification in this group

This subclass/group does not cover:

Adaptations for preventing	B65D 81/265

deterioration or decay of contents with provision for draining away, or absorbing the absorbent being placed beneath a false bottom	

Special rules of classification within this group

ALSO USED AS Indexing Code

B65D 81/263

[N: for ventilating the contents (B65D 5/4295, B65D 51/1605 take precedence)]

Definition statement

This subclass/group covers:

Illustrative example of subject matter classified in this group:

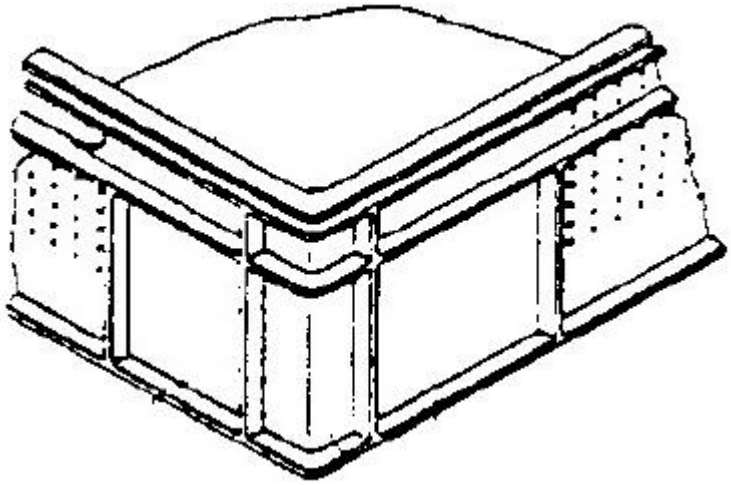

References relevant to classification in this group

This subclass/group does not cover:

Ventilating arrangements	B65D 5/4295
Means for venting air or gas whereby the interior of the container is maintained in permanent gaseous communication with the exterior	B65D 51/1605

Special rules of classification within this group

ALSO USED AS Indexing Code

B65D 81/264

[N: for absorbing liquids]

Definition statement

This subclass/group covers:
Illustrative example of subject matter classified in this group:

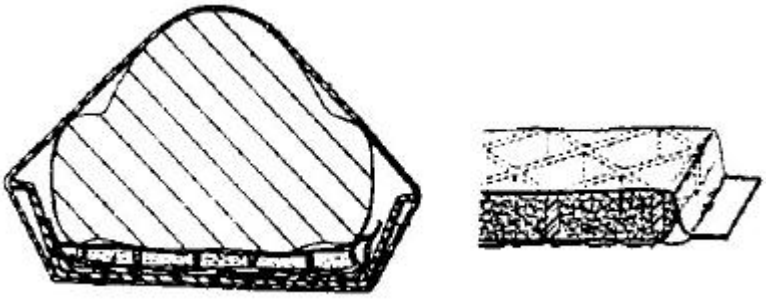

Special rules of classification within this group

ALSO USED AS Indexing Code

B65D 81/265

[N: the absorbent being placed beneath a false bottom]

Definition statement

This subclass/group covers:
Illustrative example of subject matter classified in this group:

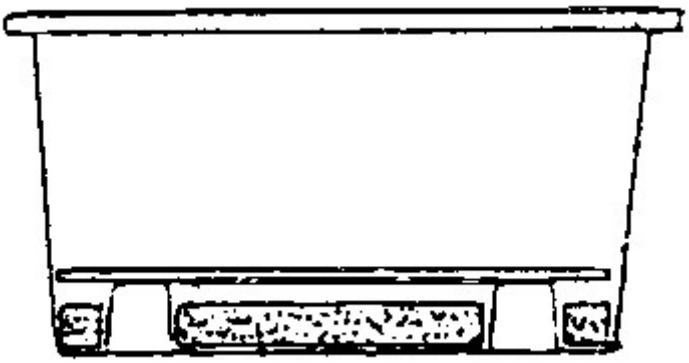

References relevant to classification in this group

This subclass/group does not cover:

Multilayered containers having an absorbent layer, e.g. trays having an absorbent layer sandwiched between two other layers	B65D 81/264

Special rules of classification within this group

ALSO USED AS Indexing Code

B65D 81/266

[N: for absorbing gases, e.g. oxygen absorbers or desiccants (B65D 51/244, B65D 51/30 take precedence)]

References relevant to classification in this group

This subclass/group does not cover:

Closures provided with oxygen absorbers	B65D 51/244
Closures with auxiliary containers for desiccators	B65D 51/30

Special rules of classification within this group

ALSO USED AS Indexing Code

B65D 81/267

[N: the absorber being in sheet form]

Definition statement

This subclass/group covers:

Illustrative example of subject matter classified in this group:

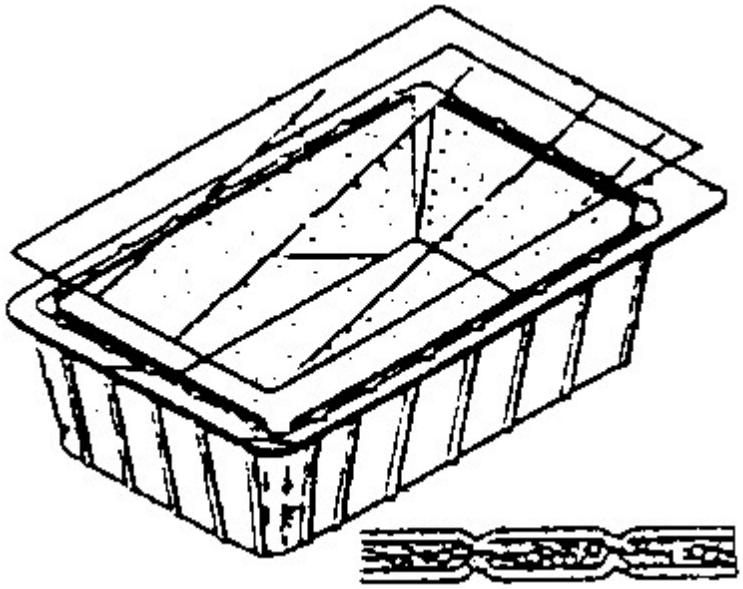

Special rules of classification within this group

ALSO USED AS Indexing Code

B65D 81/268

[N: the absorber being enclosed in a small pack, e.g. bag, included in the package]

Definition statement

This subclass/group covers:
Illustrative example of subject matter classified in this group:

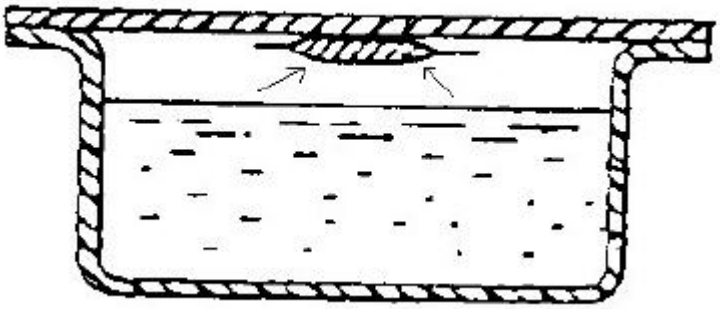

Special rules of classification within this group

ALSO USED AS Indexing Code

B65D 81/30

by excluding light or other outside radiation (wrappers B65D 65/16)

References relevant to classification in this group

This subclass/group does not cover:

Photographic material	G03C 3/00
Casings of electric apparatus	H05K 9/00

Special rules of classification within this group

ALSO USED AS Indexing Code

B65D 81/32

for packaging two or more different materials which must be maintained separate prior to use in admixture (containers with removable or destructible partitions B65D 25/08; [N: closures combined with auxiliary containers B65D 51/28; in aerosol containers B65D 83/682; amalgam capsules A61C 5/066; containers for pharmaceutical purposes A61J1/00M, A61M 5/19; medical syringes A61M 3/005, resin cartridges for grouting anchoring-bolts in mines E21D 20/026])

References relevant to classification in this group

This subclass/group does not cover:

Construction of the mixing element per se	B01F
Partitions formed by a gel	C08J 3/24
Stirring devices	B01F 13/0018
Packaging two or more different substances isolated from one another	B65B 29/10

Informative references

Attention is drawn to the following places, which may be of interest for search:

Articles joined together for	B65D 69/00

convenience of storage or transport without the use of packaging elements	
Materials, e.g. different materials, enclosed in separate compartments formed during filling of a single container	B65D 77/08

Special rules of classification within this group

ALSO USED AS Indexing Code

B65D 81/3205

[N: Separate rigid or semi-rigid containers joined to each other at their external surfaces (B65D 81/3288 takes precedence)]

Definition statement

This subclass/group covers:

Illustrative example of subject matter classified in this group:

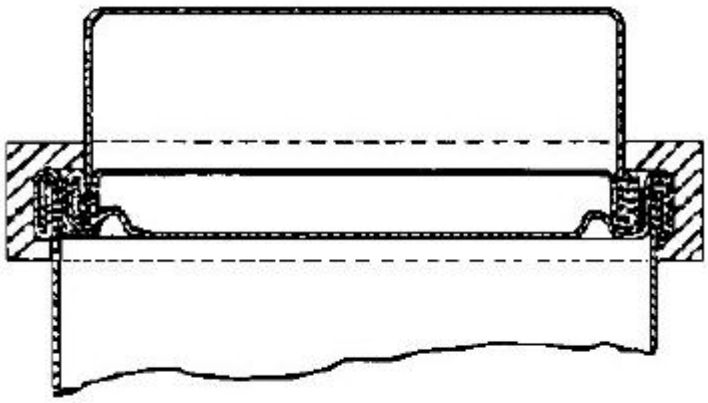

References relevant to classification in this group

This subclass/group does not cover:

Cylindrical or polygonal containers composed of two or more separate containers joined to each other	B65D 81/3288

Informative references

Attention is drawn to the following places, which may be of interest for search:

Auxiliary removable stacking elements other than covers	B65D 21/0224
Rigid or semi-rigid containers provided with a recess in order to be seated on the neck or similar protrusion of a larger container	B65D 21/0238
Coaxial connections	B65D 71/502

Special rules of classification within this group

ALSO USED AS Indexing Code

B65D 81/3211

[N: coaxially and provided with means facilitating admixture]

Definition statement

This subclass/group covers:

Illustrative example of subject matter classified in this group:

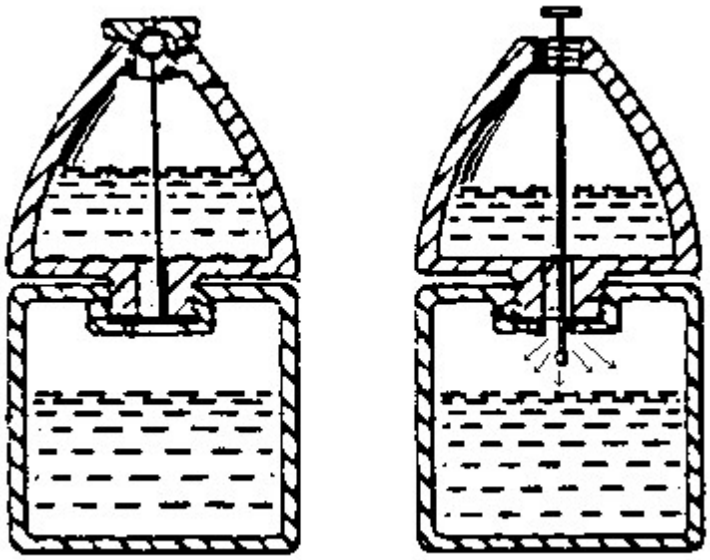

References relevant to classification in this group

This subclass/group does not cover:

Packages having self-contained heating means, e.g. by mixing two heat generating chemicals	B65D 81/3484

Informative references

Attention is drawn to the following places, which may be of interest for search:

Partitions with provisions for removing or destroying	B65D 25/08

Special rules of classification within this group

ALSO USED AS Indexing Code

B65D 81/3216

[N: Rigid containers disposed one within the other]

Definition statement

This subclass/group covers:

Illustrative example of subject matter classified in this group:

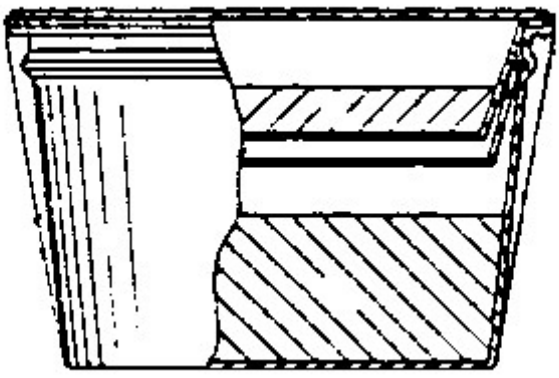

Special rules of classification within this group

ALSO USED AS Indexing Code

B65D 81/3222

[N: with additional means facilitating admixture]

Definition statement

This subclass/group covers:
Illustrative example of subject matter classified in this group:

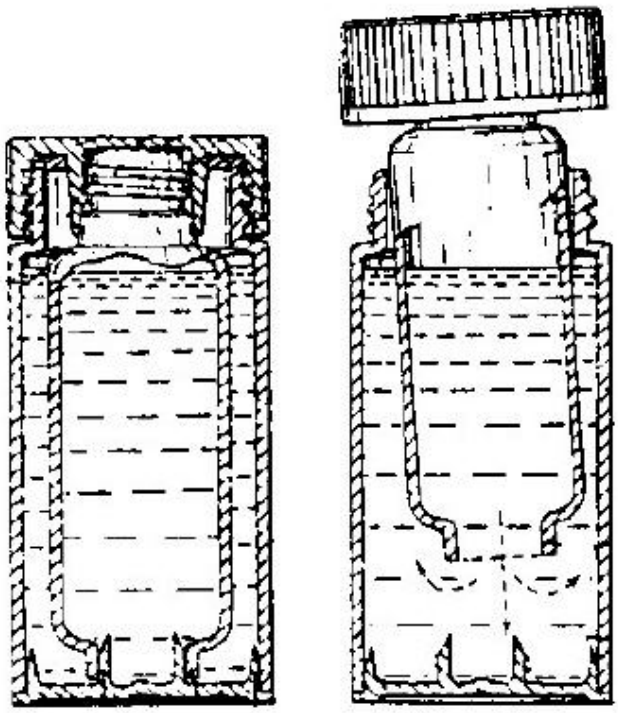

References relevant to classification in this group

This subclass/group does not cover:

Packages having self-contained heating means, e.g. by mixing two heat generating chemicals	B65D 81/34

Informative references

Attention is drawn to the following places, which may be of interest for search:

Closures presenting means for placing the additional articles or materials in contact with the main contents by acting on a part of the closure without removing the closure	B65D 51/2807

Special rules of classification within this group

ALSO USED AS Indexing Code

B65D 81/3227

[N: arranged parallel or concentrically and permitting simultaneous dispensing of the two materials without prior mixing (B65D 81/325 takes precedence)]

Definition statement

This subclass/group covers:

Illustrative example of subject matter classified in this group:

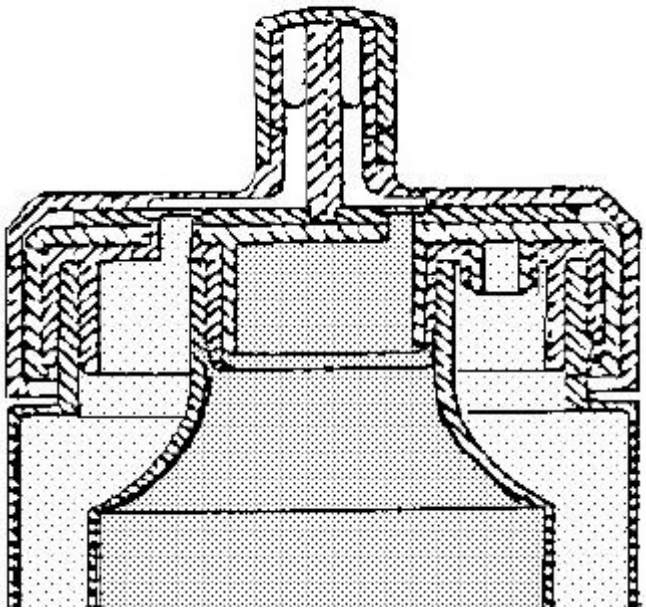

References relevant to classification in this group

This subclass/group does not cover:

Construction of the mixing element per se	B01F

Informative references

Attention is drawn to the following places, which may be of interest for search:

Multi-cavity bottles	B65D 1/04
Pliable tubular containers adapted to be permanently deformed to expel contents with two or more compartments	B65D 35/22
Flexible containers disposed within rigid containers arranged parallel or concentrically and permitting simultaneous dispensing of the two materials without prior mixing	B65D 81/3244
Containers having parallel or coaxial compartments, provided with a piston or a movable bottom for discharging contents	B65D 81/325

Special rules of classification within this group

ALSO USED AS Indexing Code

B65D 81/3233

[N: Flexible containers disposed within rigid containers]

Definition statement

This subclass/group covers:

Illustrative example of subject matter classified in this group:

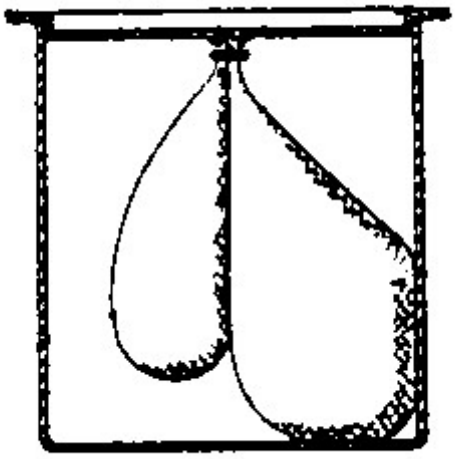

Special rules of classification within this group

ALSO USED AS Indexing Code

B65D 81/3238

[N: with additional means facilitating admixture]

Definition statement

This subclass/group covers:
Illustrative example of subject matter classified in this group:

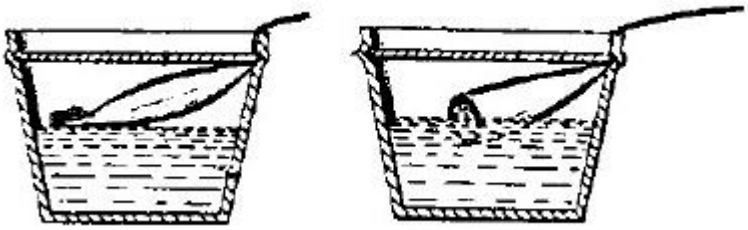

Special rules of classification within this group

ALSO USED AS Indexing Code

B65D 81/3244

[N: arranged parallel or concentrically and permitting simultaneous dispensing of the two materials without prior mixing (B65D 35/22, B65D 81/325 take precedence)]

Definition statement

This subclass/group covers:
Illustrative example of subject matter classified in this group:

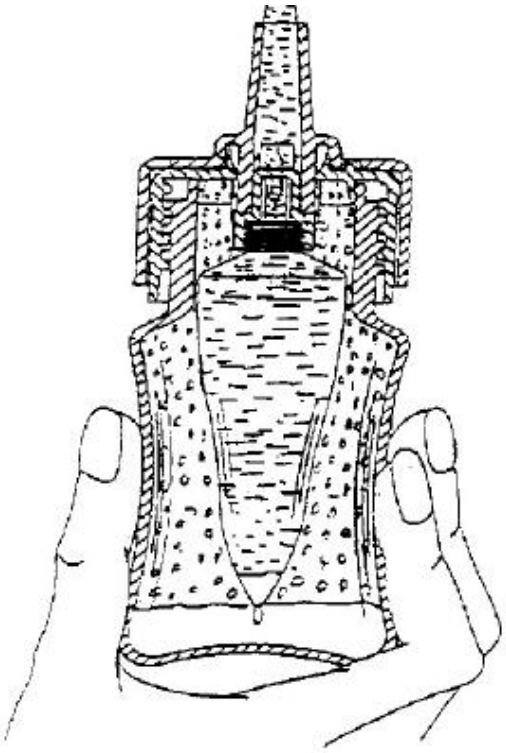

References relevant to classification in this group

This subclass/group does not cover:

Pliable tubular containers adapted to be permanently deformed to expel contents with two or more compartments	B65D 35/22
Containers having parallel or coaxial compartments, provided with a piston or a movable bottom for discharging contents	B65D 81/325

Informative references

Attention is drawn to the following places, which may be of interest for search:

Multi-cavity bottles	B65D 1/04
Rigid containers disposed one within the other arranged parallel or concentrically and permitting simultaneous dispensing of the two materials without prior mixing	B65D 81/3227

Special rules of classification within this group

ALSO USED AS Indexing Code

B65D 81/325

[N: Containers having parallel or coaxial compartments, provided with a piston or a movable bottom for discharging contents]

Definition statement

This subclass/group covers:

Illustrative example of subject matter classified in this group:

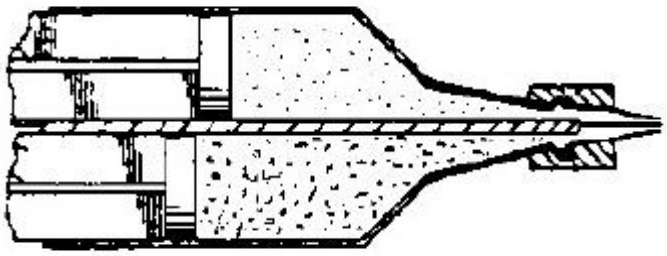

References relevant to classification in this group

This subclass/group does not cover:

Construction of the mixing element per se	B01F

Informative references

Attention is drawn to the following places, which may be of interest for search:

Movable or transportable mixing devices or plants	B01F 13/0016
Hand tools or apparatus using hand held tools with means allowing the stock of material to consist of at least two different components	B05C 17/00553
Rigid containers disposed one within the other arranged parallel or	B65D 81/3227

concentrically and permitting simultaneous dispensing of the two materials without prior mixing	
Flexible containers disposed within rigid containersarranged parallel or concentrically and permitting simultaneous dispensing of the two materials without prior mixing	B65D 81/3244
Cylindrical or polygonal containers	B65D 81/3283

Special rules of classification within this group

ALSO USED AS Indexing Code

B65D 81/3255

[N: Containers provided with a piston or a movable bottom, and permitting admixture within the container]

Definition statement

This subclass/group covers:
Illustrative example of subject matter classified in this group:

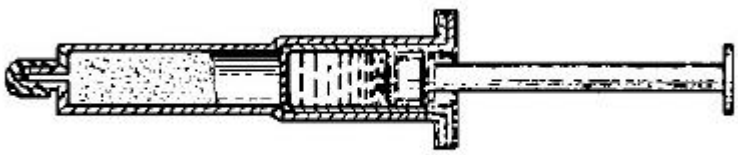

Special rules of classification within this group

ALSO USED AS Indexing Code

B65D 81/3261

[N: Flexible containers having several compartments]

Definition statement

This subclass/group covers:
Illustrative example of subject matter classified in this group:

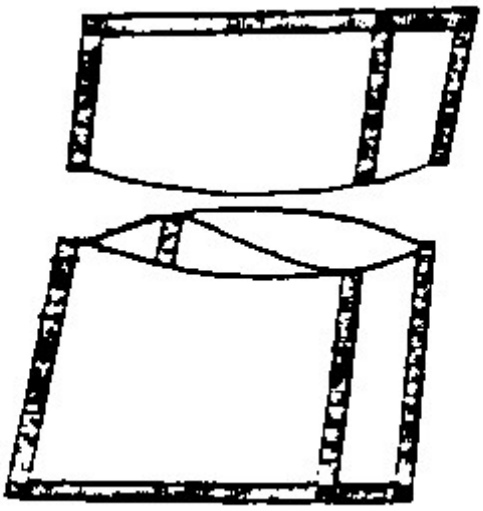

References relevant to classification in this group

This subclass/group does not cover:

Packages having self-contained heating means, e.g. by mixing two heat generating chemicals	B65D 81/3484

Special rules of classification within this group

ALSO USED AS Indexing Code

B65D 81/3266

[N: separated by a common rupturable seal, a clip or other removable fastening device]

Definition statement

This subclass/group covers:

Illustrative example of subject matter classified in this group:

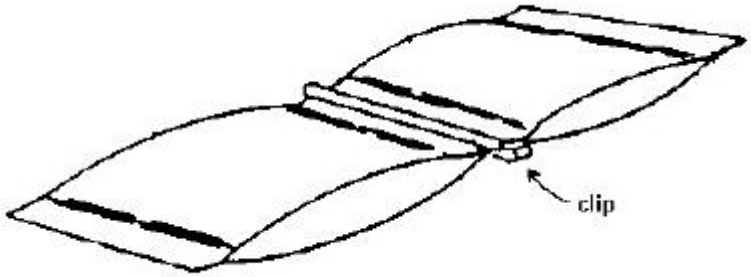

References relevant to classification in this group

This subclass/group does not cover:

For clips	B65D 33/1658
Releasable fastenings clips	F16B 2/20

Special rules of classification within this group

ALSO USED AS Indexing Code

B65D 81/3272

[N: formed by arranging one flexible container within another]

Definition statement

This subclass/group covers:
Illustrative example of subject matter classified in this group:

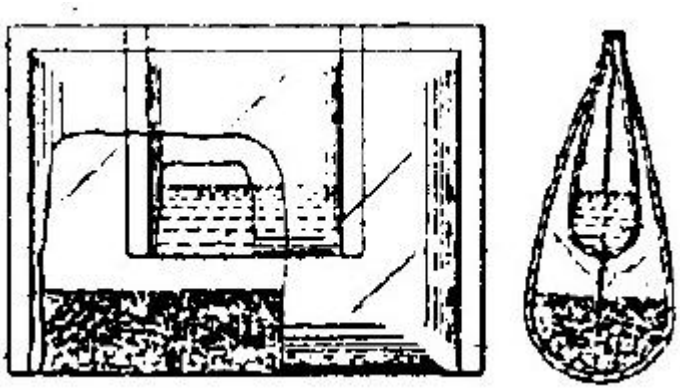

Special rules of classification within this group

ALSO USED AS Indexing Code

B65D 81/3277

[N: Ampoules]

Definition statement

This subclass/group covers:
Illustrative example of subject matter classified in this group:

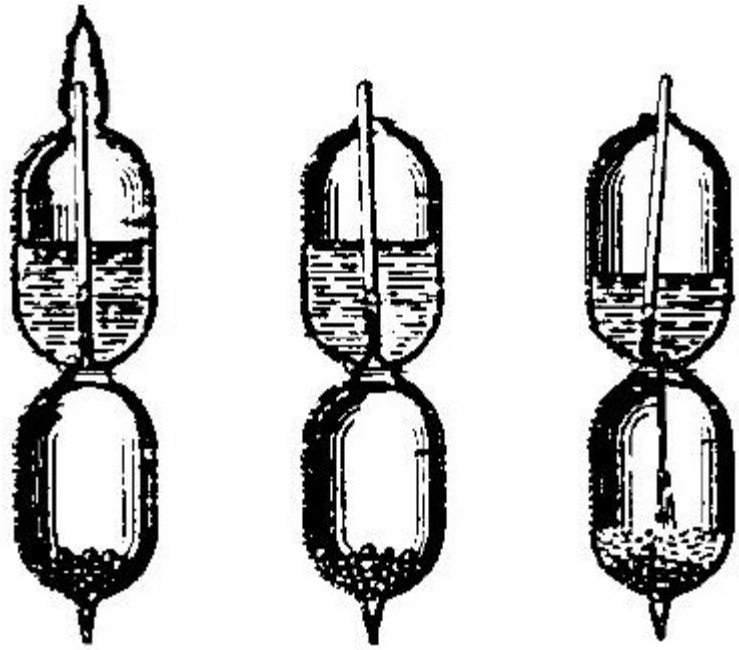

Special rules of classification within this group

ALSO USED AS Indexing Code

B65D 81/3283

[N: Cylindrical or polygonal containers, e.g. bottles, with two or more substantially axially offset, side-by-side compartments for simultaneous dispensing (B65D 35/22, B65D 35/242, B65D 81/3227, B65D 81/325 take precedence)]

Definition statement

This subclass/group covers:
Illustrative example of subject matter classified in this group:

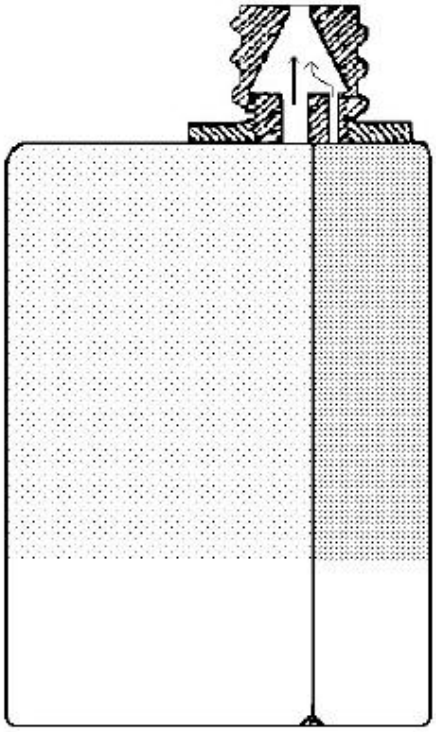

References relevant to classification in this group

This subclass/group does not cover:

Ampoules	**B01D1/09**
Construction of the mixing element per se	B01F
Pliable tubular containers adapted to be permanently deformed to expel contents with two or more compartments	B65D 35/22
Pliable tubular containers adapted to be permanently [N: or temporarily] deformed to expel contents, for mixing or discharging of two or more components	B65D 35/242
Rigid containers disposed one within the other arranged parallel or concentrically and permitting simultaneous dispensing of the two materials without prior mixing	B65D 81/3227
Containers having parallel or coaxial compartments, provided with a piston	B65D 81/325

or a movable bottom for discharging contents	

Informative references

Attention is drawn to the following places, which may be of interest for search:

Multi-cavity bottles	B65D 1/04

Special rules of classification within this group

ALSO USED AS Indexing Code

B65D 81/3288

[N: composed of two or more separate containers joined to each other]

Informative references

Attention is drawn to the following places, which may be of interest for search:

Multi-cavity bottles	B65D 1/04
Containers, stackable or joined together side-by-side	B65D 21/0201
Articles joined together for convenience of storage or transport without the use of packaging elements	B65D 69/00
Containers having parallel or coaxial compartments, provided with a piston or a movable bottom for discharging contents	B65D 81/325

Special rules of classification within this group

ALSO USED AS Indexing Code

B65D 81/3294

[N: Thermoformed trays or the like with a plurality of recesses for different materials located in different recesses]

Definition statement

This subclass/group covers:

Illustrative example of subject matter classified in this group:

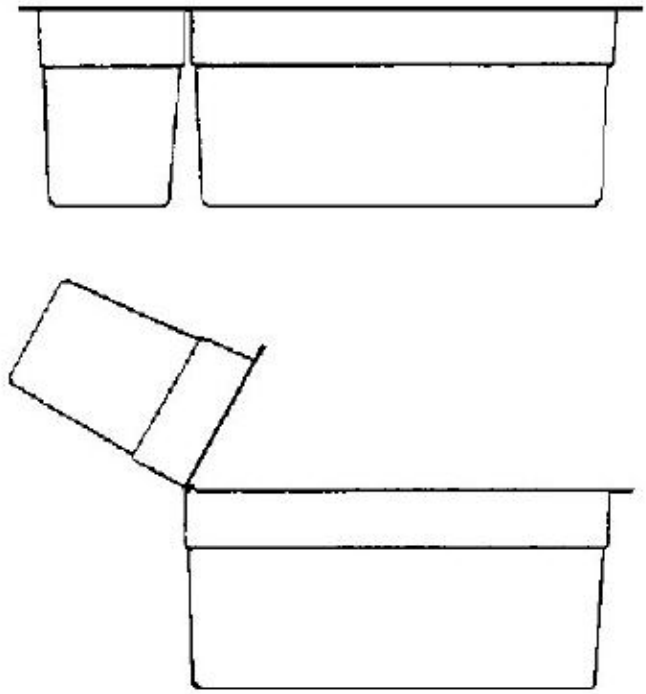

Informative references

Attention is drawn to the following places, which may be of interest for search:

Trays or like shallow containers with moulded compartments or partitions	B65D 1/36
Articles or materials enclosed between two opposed sheets or blanks having their margins united and having several recesses to accommodate a series of articles or quantities of material	B65D 75/34

Special rules of classification within this group

ALSO USED AS Indexing Code

B65D 81/34

for packaging foodstuffs [N: or other articles] intended to be cooked or heated within the package

References relevant to classification in this group

This subclass/group does not cover:

Containers specified for micro-waves	B65D 81/3446
Treatment or preparation of food or foodstuffs	A23L
Combination stirring device & package	A47G 19/00
Combination spoon & packaging container	A47G 21/00, **A47J36/0004**
Inserted devices for cooking	
Cooking or baking vessels or supports for using only once	A47J 36/022
Inserted devices for cooling	F25D
Chemical indicators for investigating time/temperature history	G01N 31/229
Packaging of edible materials intended to be cooked in the package	B65B 29/08
Holders for fast food, e.g. pizza slice	A47G 21/001

Special rules of classification within this group

ALSO USED AS Indexing Code

B65D 81/3407

[N: specially adapted to be heated over a heat source, e.g. a hob, campfire]

Definition statement

This subclass/group covers:
Illustrative example of subject matter classified in this group:

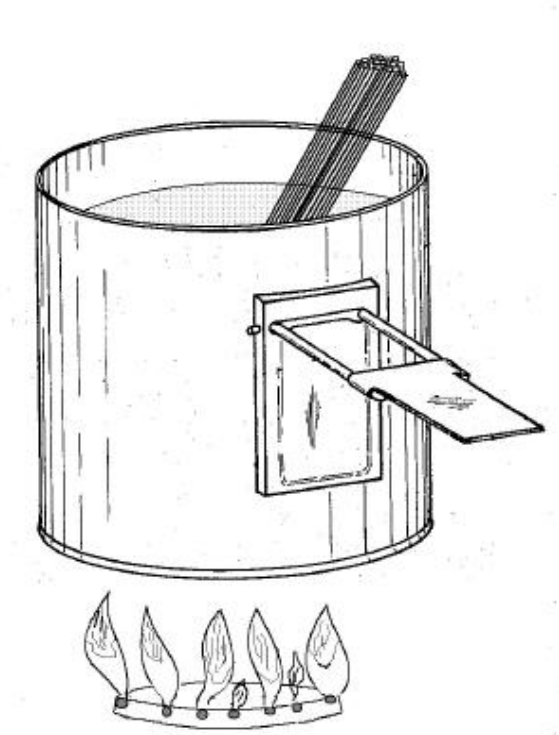

Special rules of classification within this group

ALSO USED AS Indexing Code

B65D 81/3415

[N: specially adapted to be heated in hot water, e.g. boil pouches (dissolvable packages B65D 65/46; packaging articles or materials intended to be mixed or infused with a liquid B65D81/00B)]

Definition statement

This subclass/group covers:
Illustrative example of subject matter classified in this group:

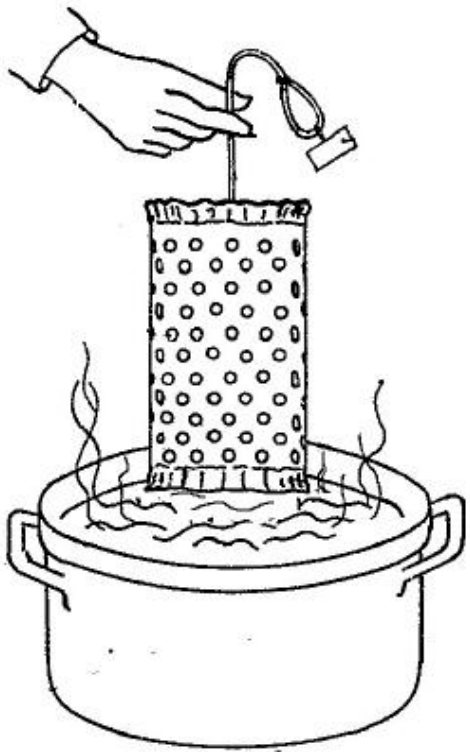

Special rules of classification within this group

ALSO USED AS Indexing Code

B65D 81/3423

[N: Packages shrinking in hot water, e.g. for boiling hams]

Definition statement

This subclass/group covers:
Illustrative example of subject matter classified in this group:

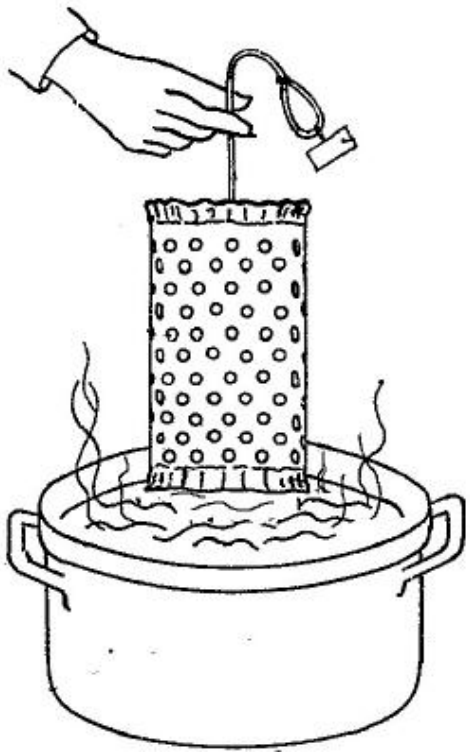

References relevant to classification in this group

This subclass/group does not cover:

Packaging for cooking ham	**L65D81/34H100M3**

Special rules of classification within this group

ALSO USED AS Indexing Code

B65D 81/343

[N: specially adapted to be heated in a conventional oven, e.g. a gas or electric resistance oven]

References relevant to classification in this group

This subclass/group does not cover:

Dual-ovenable containers, i.e. for use in a conventional or microwave oven	B65D 81/343 , B65D 81/3446, B65D 81/3453, B65D 81/3461

Special rules of classification within this group

ALSO USED AS Indexing Code

B65D 81/34C99

documents that stay in B65D 81/34 (DO NOT USE - REORGANISATION)

B65D 81/3438

[N: specially adapted to be heated by steaming (au-bain-marie L65D81/34H200C)]

Definition statement

This subclass/group covers:
Illustrative example of subject matter classified in this group:

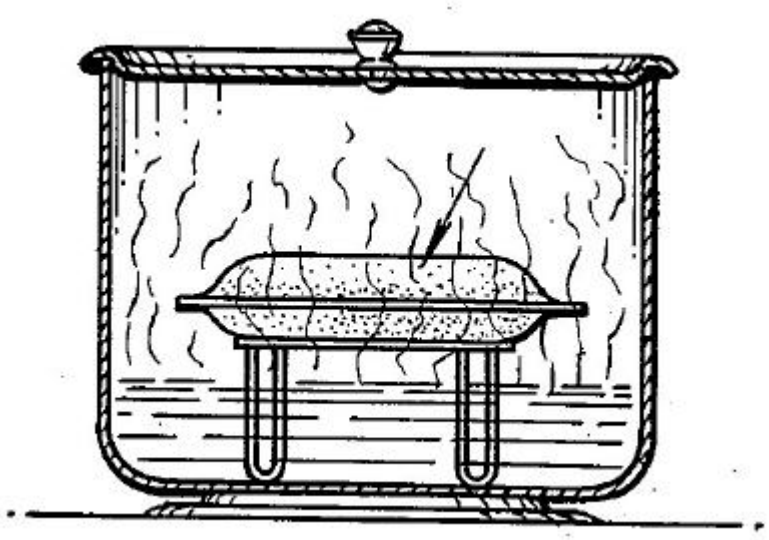

Special rules of classification within this group

ALSO USED AS Indexing Code

B65D 81/3446

[N: specially adapted to be heated by micro-waves]

Definition statement

This subclass/group covers:
Illustrative example of subject matter classified in this group:

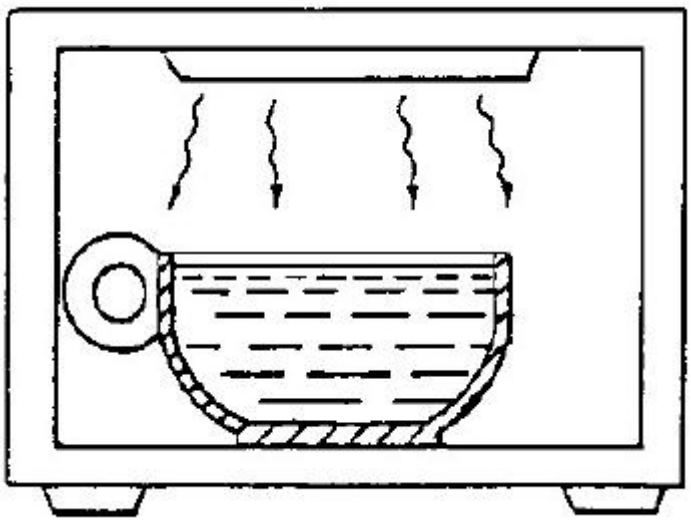

References relevant to classification in this group

This subclass/group does not cover:

Dualovenable containers, i.e. for use in a conventional or microwave oven	B65D 81/343, B65D 81/3446, B65D 81/3453, B65D 81/3461

Special rules of classification within this group

ALSO USED AS Indexing Code

B65D 81/3453

[N: Rigid containers, e.g. trays, bottles, boxes, cups]

References relevant to classification in this group

This subclass/group does not cover:

Cooking or baking-vessels specially adapted for use in MW oven	A47J 36/027
Water boiling vessels using MW energy	A47J 31/547

Special rules of classification within this group

ALSO USED AS Indexing Code

B65D 81/3469

[N: Pop-corn bags]

Definition statement

This subclass/group covers:
Illustrative example of subject matter classified in this group:

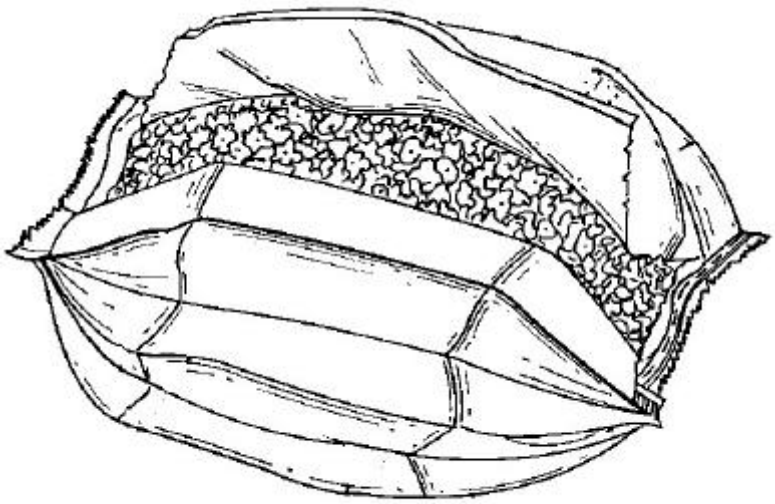

References relevant to classification in this group

This subclass/group does not cover:

Making puffed cereals by heating without pressure release, e.g. pop corn, puffed rice	A23L 1/18

Special rules of classification within this group

ALSO USED AS Indexing Code

B65D 81/3476

[N: Packages provided with an electrical circuit, e.g. resistances, for heating the contents (microwave susceptors L65D81/34M700S)]

Definition statement

This subclass/group covers:
Illustrative example of subject matter classified in this group:

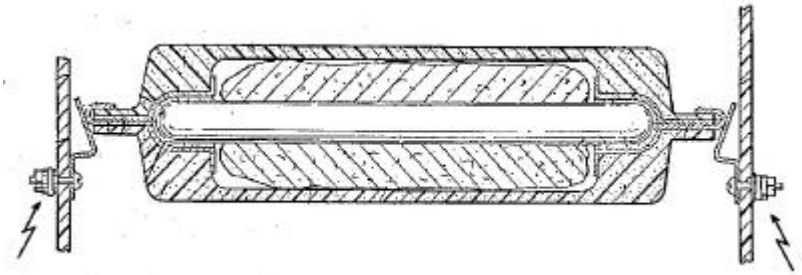

Special rules of classification within this group

ALSO USED AS Indexing Code

B65D 81/3484

[N: Packages having self-contained heating means, e.g. heating generated by the reaction of two chemicals (warming devices A47J 36/24)]

Definition statement

This subclass/group covers:
Illustrative example of subject matter classified in this group:

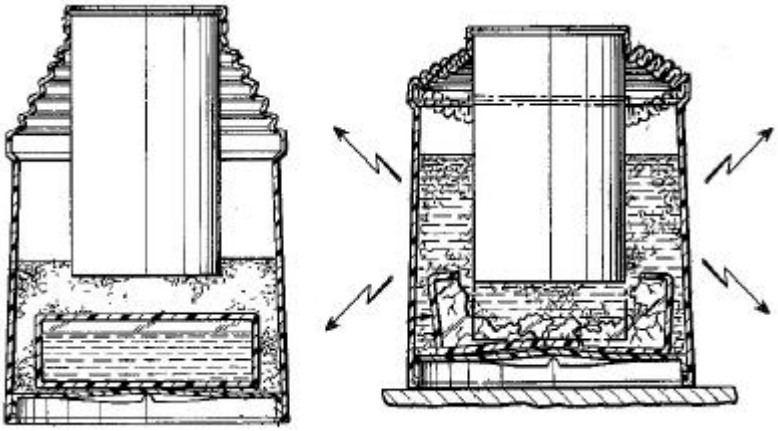

References relevant to classification in this group

This subclass/group does not cover:

Rigid containers disposed one within the other	B65D 81/3216
Apparatus or devices using heat	F24J 1/00

produced by exothermal chemical reactions other than by combustion	
Bottles and cans having self-contained cooling means	F25D 31/007
Materials for the production of heat or cold by chemical reactions other than combustion	C09K 5/00

Special rules of classification within this group

ALSO USED AS Indexing Code

B65D 81/3492

[N: specially adapted to be heated in a toaster]

Definition statement

This subclass/group covers:
Illustrative example of subject matter classified in this group:

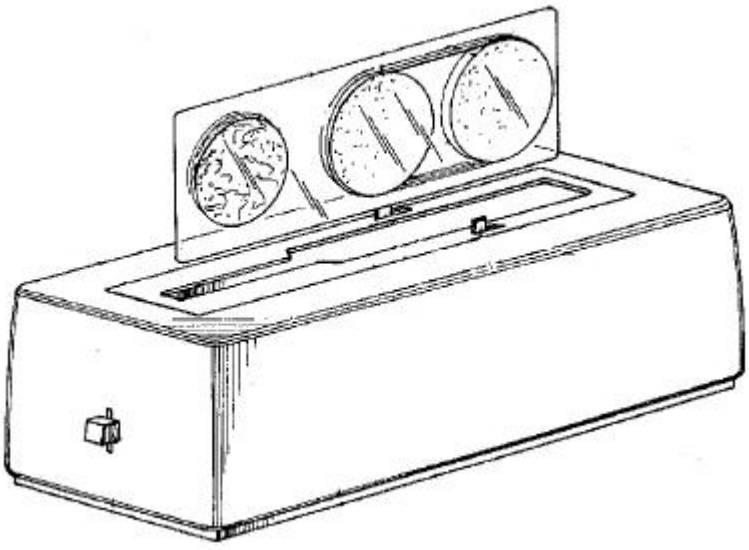

Special rules of classification within this group

ALSO USED AS Indexing Code

B65D 81/36

adapted to be used for non-packaging purposes after removal of contents

References relevant to classification in this group

This subclass/group does not cover:

Combination stirring device & package	A47G 19/00
Holders or wrappers as eating aids for fast food, e.g. hamburgers	A47G 21/001
Combination spoon & packaging container	A47G 21/04
Oil cans for the collection of used oil	F16N 31/002

Special rules of classification within this group

ALSO USED AS Indexing Code

B65D 81/361

[N: Modular elements with complementary shapes, interengageable parts or the like (toy building blocks A63H 33/04; building elements for walls E04B 2/02)]

Definition statement

This subclass/group covers:

Illustrative example of subject matter classified in this group:

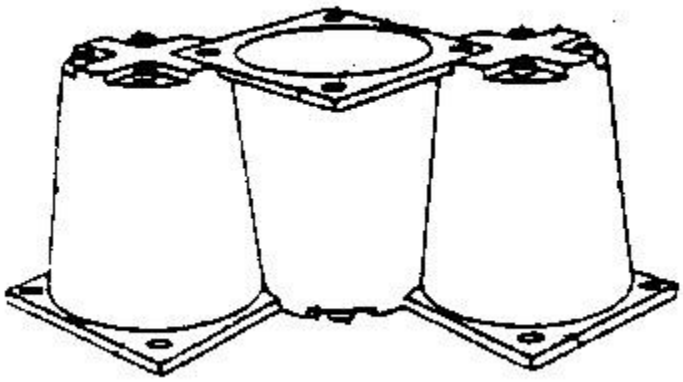

Informative references

Attention is drawn to the following places, which may be of interest for search:

Containers of variable capacity by means of additional elements	B65D 21/083

Special rules of classification within this group

ALSO USED AS Indexing Code

B65D 81/363

[N: Containers forming or being transformable into items of wearing apparel, e.g. shirt, apron, hat]

Definition statement

This subclass/group covers:

Illustrative example of subject matter classified in this group:



Special rules of classification within this group

ALSO USED AS Indexing Code

B65D 81/365

[N: Containers, or parts thereof, simulating or being

incorporated into other items, e.g. puppet, animal, vehicle, building, dumb bells (B65D 81/363, B65D 81/368 take precedence)]

Definition statement

This subclass/group covers:

Illustrative example of subject matter classified in this group:

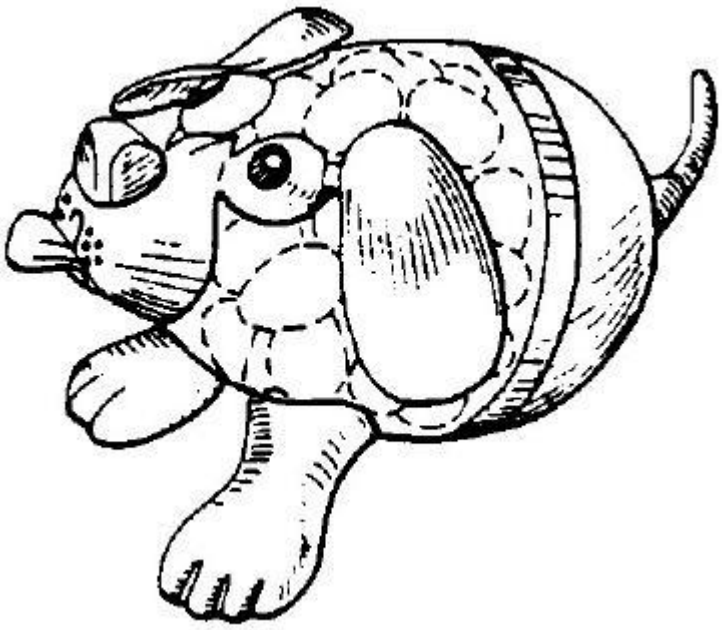

References relevant to classification in this group

This subclass/group does not cover:

Containers forming or being transformable into items of wearing apparel	B65D 81/363
Foldable carton-boxes simulating, or transformable into, a special configuration	B65D 81/368

Special rules of classification within this group

ALSO USED AS Indexing Code

B65D 81/366

[N: the container closure only being provided with a three

dimensional figure, e.g. chess piece, animal]

Definition statement

This subclass/group covers:
Illustrative example of subject matter classified in this group:



Informative references

Attention is drawn to the following places, which may be of interest for search:

Closures provided with decoration, information or contents indicating devices, labels	B65D 51/245
Special configurations relating to container closures	B65D 2251/06

Special rules of classification within this group

ALSO USED AS Indexing Code

B65D 81/368

[N: Foldable carton-boxes simulating, or transformable into, a special configuration, e.g. a car, a house, an animal (cartons with spaced apart images to give a 3-D effect B65D 5/4258; toy models made by folding paper A63H 33/16)]

Definition statement

This subclass/group covers:
Illustrative example of subject matter classified in this group:

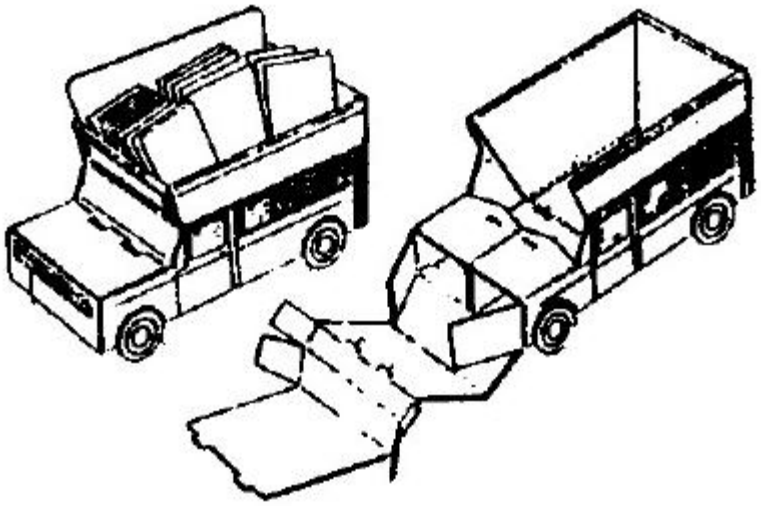

B65D 81/38

with thermal insulation (vacuum bottles or the like A47J 41/00; [N: thermal insulation of domestic water storage heaters F24H1/18B4])

References relevant to classification in this group

This subclass/group does not cover:

Insulated bags	B65D 31/04

Special rules of classification within this group

ALSO USED AS Indexing Code

B65D 81/3806

[N: formed with double walls, i.e. hollow]

Definition statement

This subclass/group covers:
Illustrative example of subject matter classified in this group:

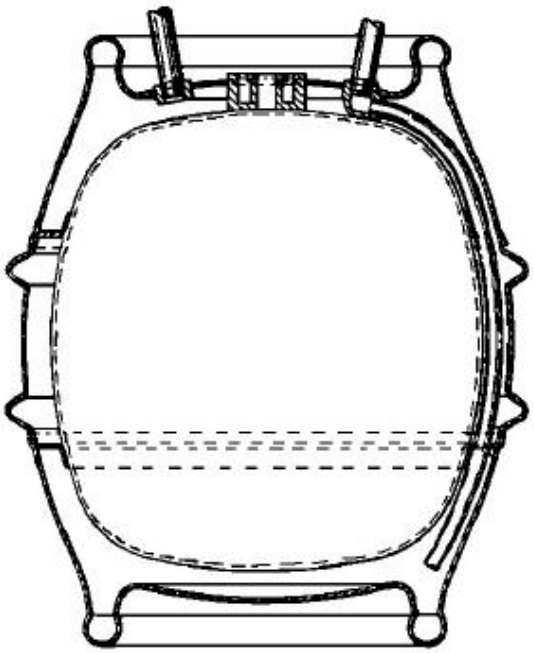

Special rules of classification within this group

ALSO USED AS Indexing Code

B65D 81/3811

[N: formed of different materials, e.g. laminated or foam filling between walls]

Definition statement

This subclass/group covers:

Illustrative example of subject matter classified in this group:

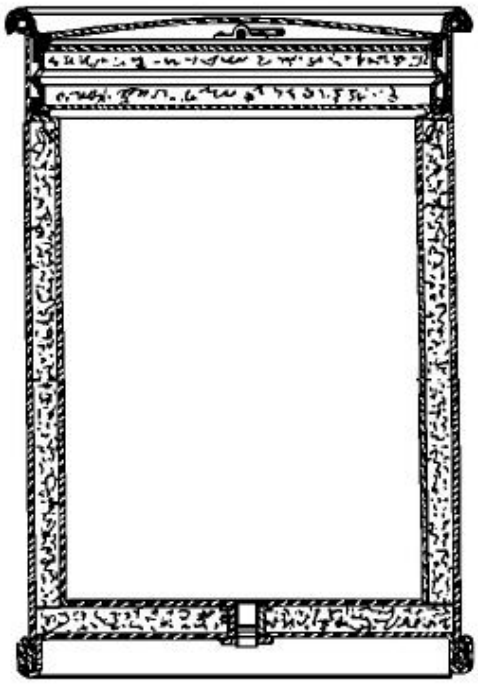

Special rules of classification within this group

ALSO USED AS Indexing Code

B65D 81/3816

[N: formed of foam material]

Definition statement

This subclass/group covers:
Illustrative example of subject matter classified in this group:

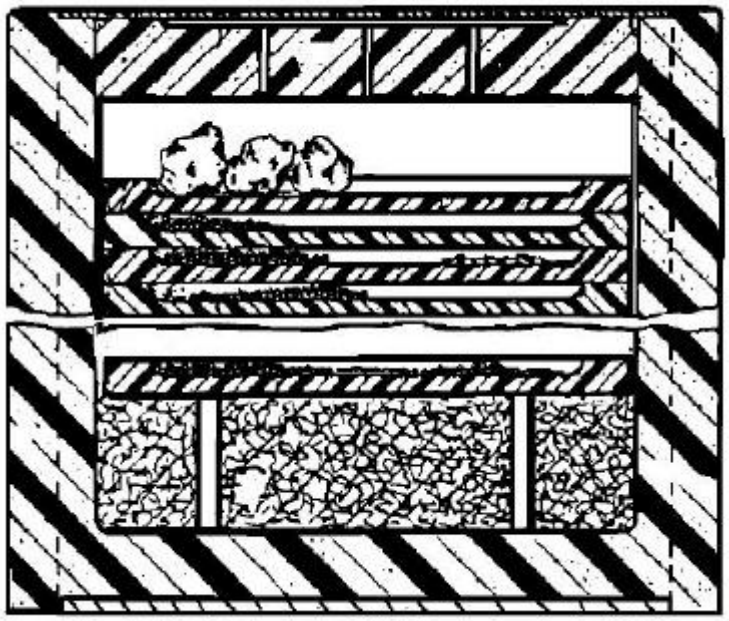

Special rules of classification within this group

ALSO USED AS Indexing Code

B65D 81/3818

[N: formed with double walls, i.e. hollow]

Definition statement

This subclass/group covers:
Illustrative example of subject matter classified in this group:

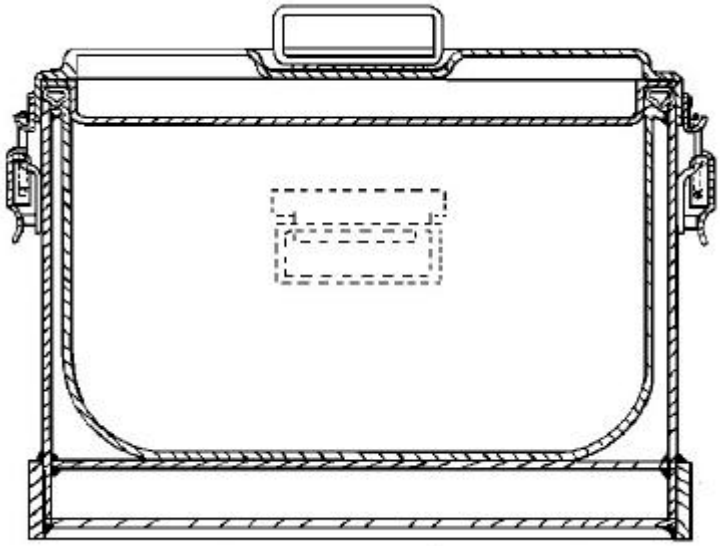

Special rules of classification within this group

ALSO USED AS Indexing Code

B65D 81/382

[N: provided with liquid material between double walls]

Definition statement

This subclass/group covers:
Illustrative example of subject matter classified in this group:

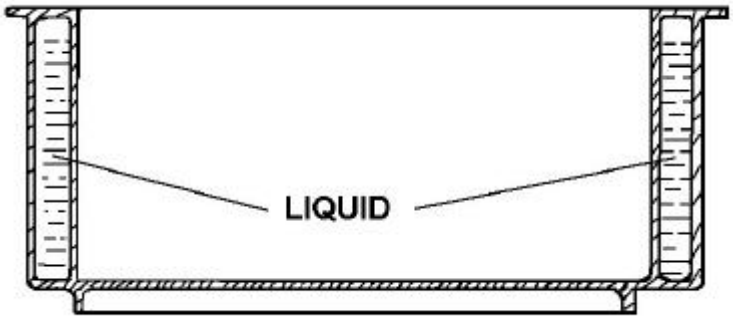

Special rules of classification within this group

ALSO USED AS Indexing Code

B65D 81/3823

[N: formed of different materials, e.g. laminated or foam filling between walls]

Definition statement

This subclass/group covers:
Illustrative example of subject matter classified in this group:

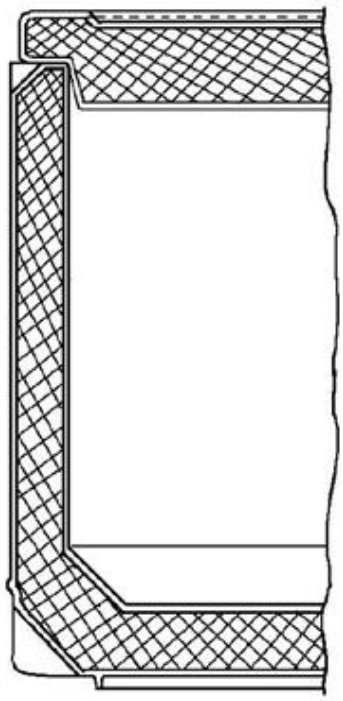

Special rules of classification within this group

ALSO USED AS Indexing Code

B65D 81/3825

[N: rigid container being in the form of a box, tray or like container with one or more containers located inside the external container]

Informative references

Attention is drawn to the following places, which may be of interest for search:

Serving trays with means for keeping food cool or hot	A47G 23/0683
Dish-warmers; devices to keep food hot	A47J 39/02

Special rules of classification within this group

ALSO USED AS Indexing Code

B65D 81/3827

[N: the external tray being formed of foam material]

Definition statement

This subclass/group covers:
Illustrative example of subject matter classified in this group:

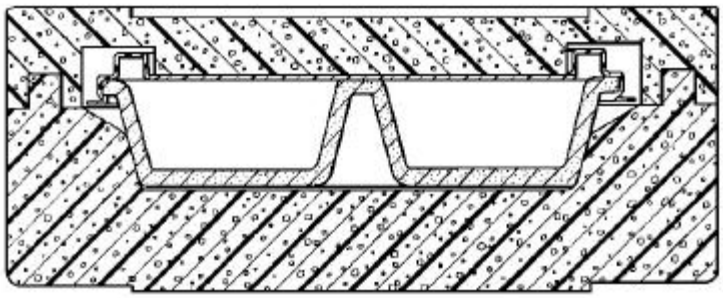

Informative references

Attention is drawn to the following places, which may be of interest for search:

Serving trays with means for keeping food cool or hot	A47G 23/0683
Dish-warmers; devices to keep food hot	A47J 39/02

Special rules of classification within this group

ALSO USED AS Indexing Code

B65D 81/383

[N: the external tray being formed with double walls, i.e. hollow]

Informative references

Attention is drawn to the following places, which may be of interest for search:

Serving trays with means for keeping food cool or hot	A47G 23/0683

Special rules of classification within this group

ALSO USED AS Indexing Code

B65D 81/3832

[N: the external tray being provided with liquid material between double walls]

Informative references

Attention is drawn to the following places, which may be of interest for search:

Serving trays with means for keeping food cool or hot	A47G 23/0683
Dish-warmers; devices to keep food hot	A47J 39/02

Special rules of classification within this group

ALSO USED AS Indexing Code

B65D 81/3834

[N: the external tray being formed of different materials, e.g. laminated or foam filling between walls]

Definition statement

This subclass/group covers:

Illustrative example of subject matter classified in this group:

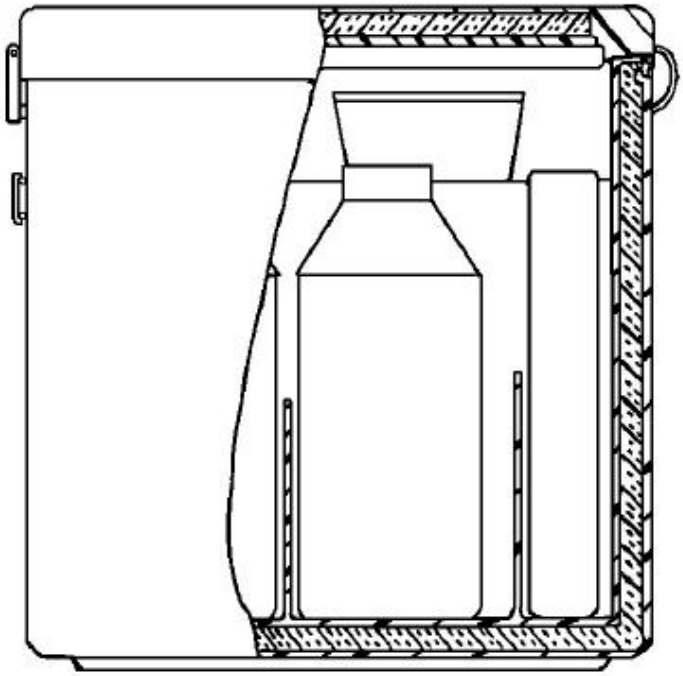

Informative references

Attention is drawn to the following places, which may be of interest for search:

Serving trays with means for keeping food cool or hot	A47G 23/0683
Dish-warmers; devices to keep food hot	A47J 39/02

Special rules of classification within this group

ALSO USED AS Indexing Code

B65D 81/3839

[N: formed of foam material]

Definition statement

This subclass/group covers:

Illustrative example of subject matter classified in this group:

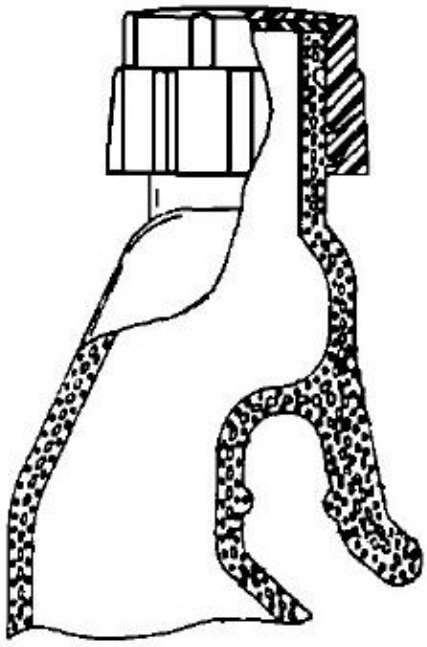

Special rules of classification within this group

ALSO USED AS Indexing Code

B65D 81/3841

[N: formed with double walls, i.e. hollow]

Definition statement

This subclass/group covers:
Illustrative example of subject matter classified in this group:

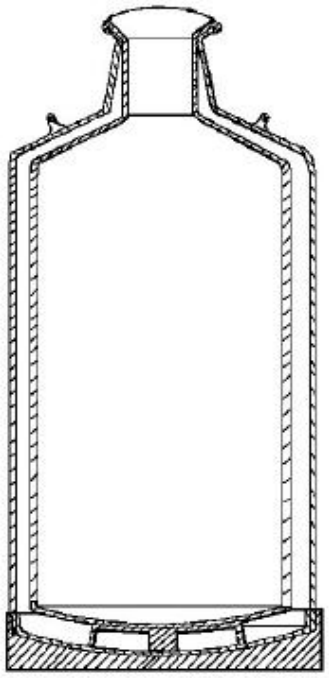

Special rules of classification within this group

ALSO USED AS Indexing Code

B65D 81/3846

[N: formed of different materials, e.g. laminated or foam filling between walls]

Definition statement

This subclass/group covers:

Illustrative example of subject matter classified in this group:

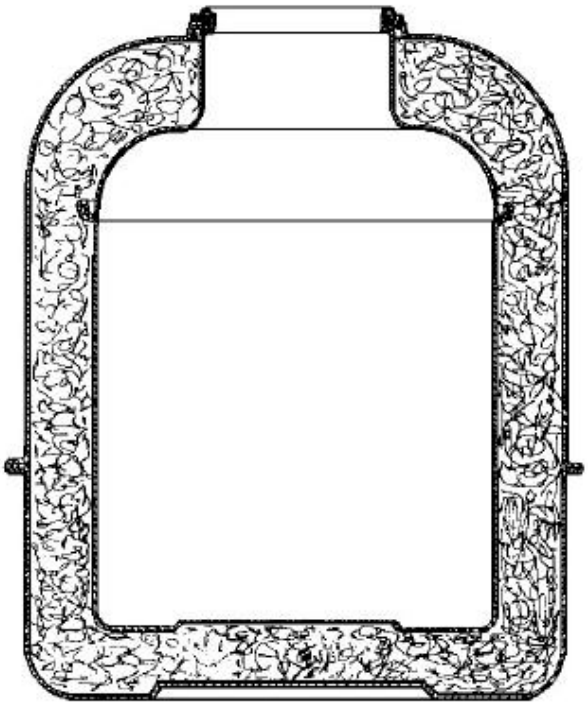

Special rules of classification within this group

ALSO USED AS Indexing Code

B65D 81/3851

[N: formed of foam material]

Definition statement

This subclass/group covers:
Illustrative example of subject matter classified in this group:

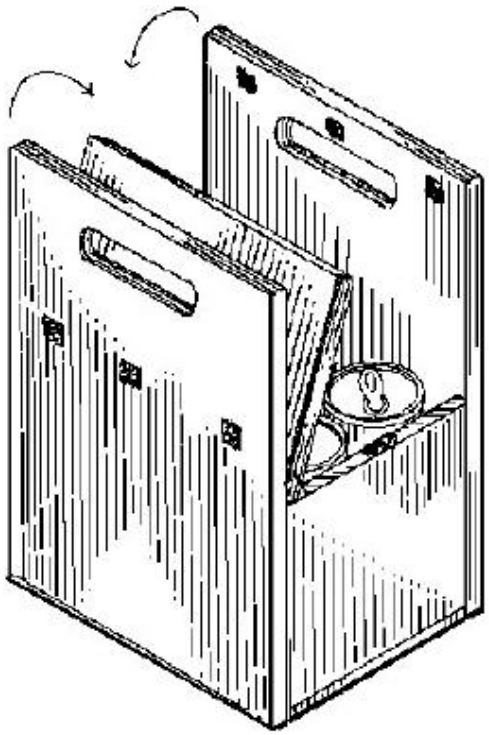

Special rules of classification within this group

ALSO USED AS Indexing Code

B65D 81/3853

[N: formed with double walls, i.e. hollow]

Definition statement

This subclass/group covers:
Illustrative example of subject matter classified in this group:

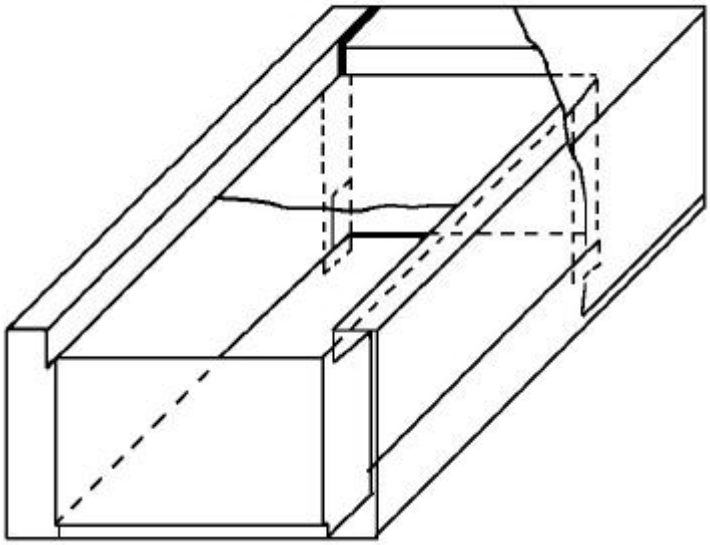

Informative references

Attention is drawn to the following places, which may be of interest for search:

Linings spaced appreciably from container wall	B65D 5/58

Special rules of classification within this group

ALSO USED AS Indexing Code

B65D 81/3858

[N: formed of different materials, e.g. laminated or foam filling between walls; for shock absorbing purposes B65D 81/1275]

Informative references

Attention is drawn to the following places, which may be of interest for search:

Laminated linings; coatings	B65D 5/563
Linings made of relatively rigid sheet material	B65D 5/566

Special rules of classification within this group

ALSO USED AS Indexing Code

B65D 81/386

[N: formed of corrugated material]

Definition statement

This subclass/group covers:
Illustrative example of subject matter classified in this group:

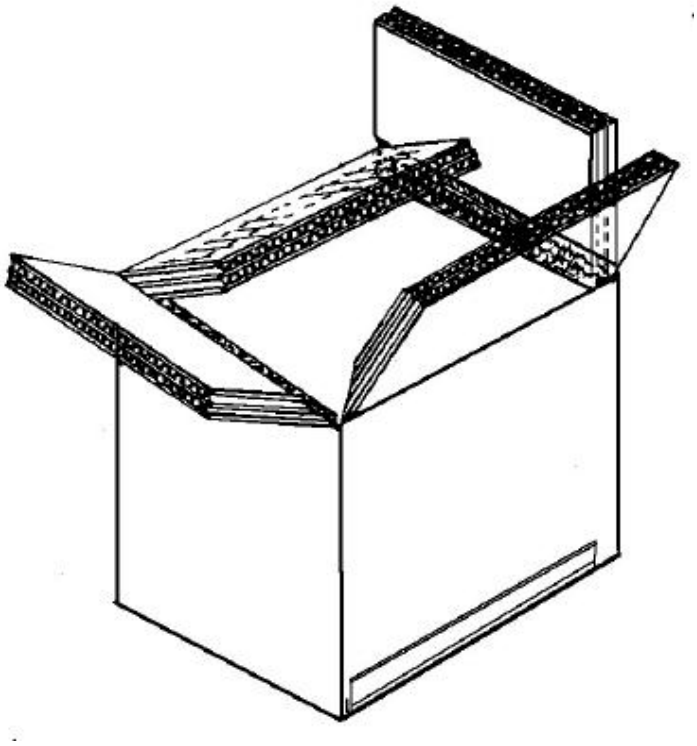

Informative references

Attention is drawn to the following places, which may be of interest for search:

Linings made of relatively rigid sheet material	B65D 5/566

Special rules of classification within this group

ALSO USED AS Indexing Code

B65D 81/3862

[N: with a foam formed container located inside a folded box]

Definition statement

This subclass/group covers:
Illustrative example of subject matter classified in this group:

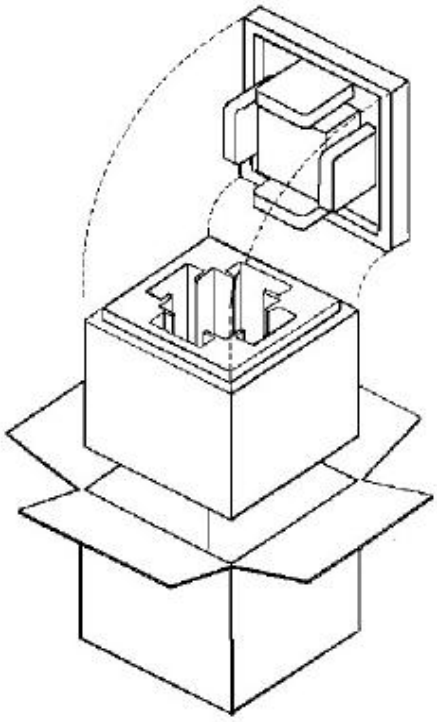

Special rules of classification within this group

ALSO USED AS Indexing Code

B65D 81/3865

[N: drinking cups or like containers]

Definition statement

This subclass/group covers:
Illustrative example of subject matter classified in this group:

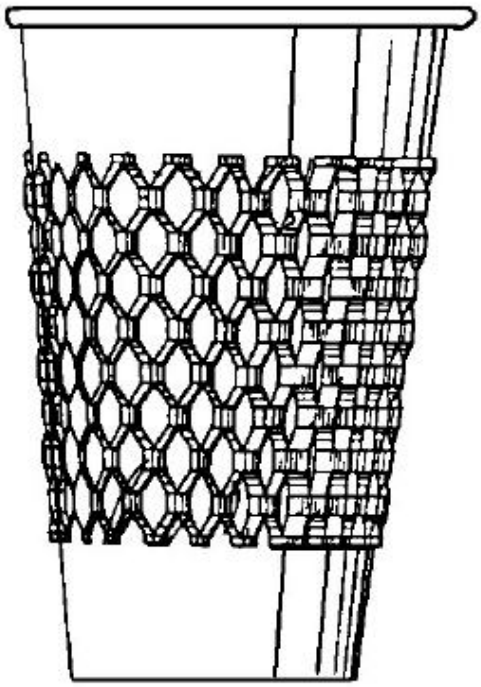

References relevant to classification in this group

This subclass/group does not cover:

Insulating sleeves for drinking cups	B65D 81/3876

Special rules of classification within this group

ALSO USED AS Indexing Code

B65D 81/3867

[N: formed of foam material]

Definition statement

This subclass/group covers:
Illustrative example of subject matter classified in this group:

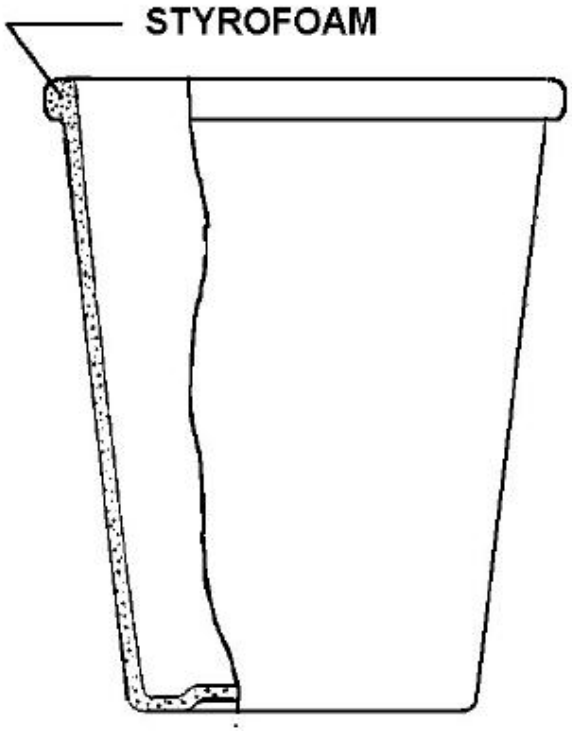

Special rules of classification within this group

ALSO USED AS Indexing Code

B65D 81/3869

[N: formed with double walls, i.e. hollow]

Definition statement

This subclass/group covers:
Illustrative example of subject matter classified in this group:

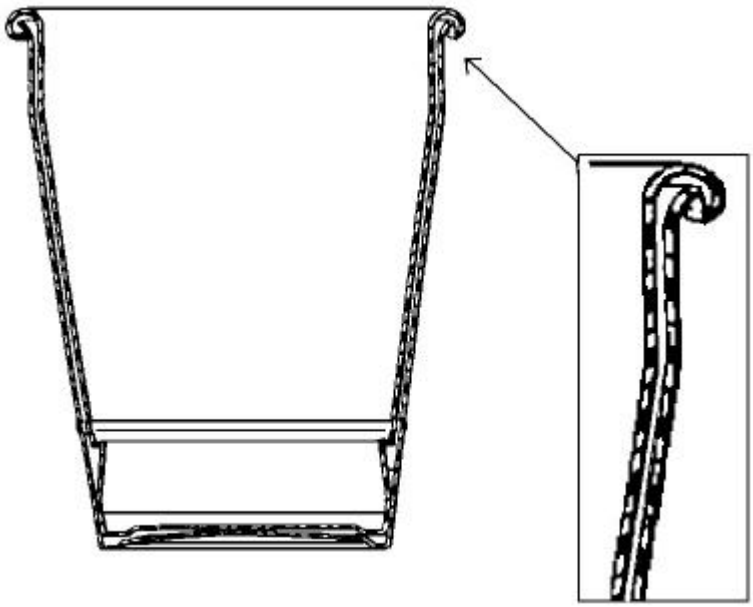

Special rules of classification within this group

ALSO USED AS Indexing Code

B65D 81/3874

[N: formed of different materials, e.g. laminated or foam filling between walls]

Definition statement

This subclass/group covers:

Illustrative example of subject matter classified in this group:

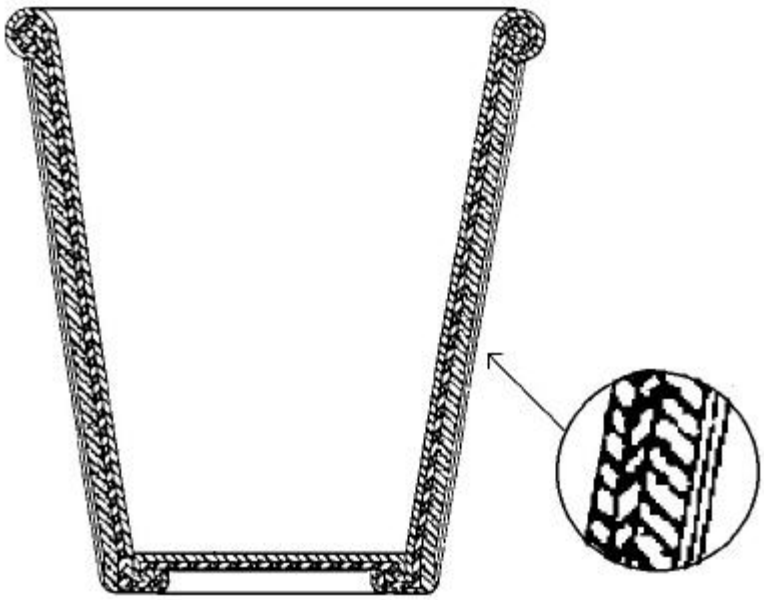

Special rules of classification within this group

ALSO USED AS Indexing Code

B65D 81/3879

[N: formed of foam material]

Definition statement

This subclass/group covers:
Illustrative example of subject matter classified in this group:

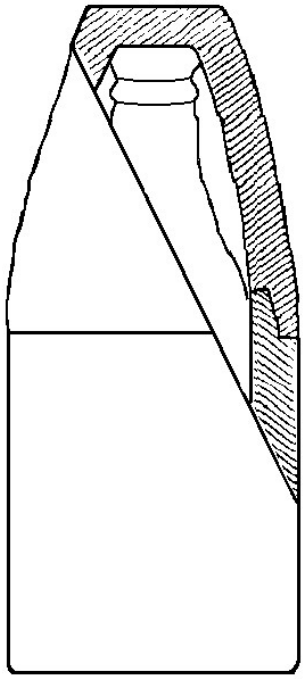

Special rules of classification within this group

ALSO USED AS Indexing Code

B65D 81/3881

[N: formed with double walls, i.e. hollow]

Definition statement

This subclass/group covers:
Illustrative example of subject matter classified in this group:

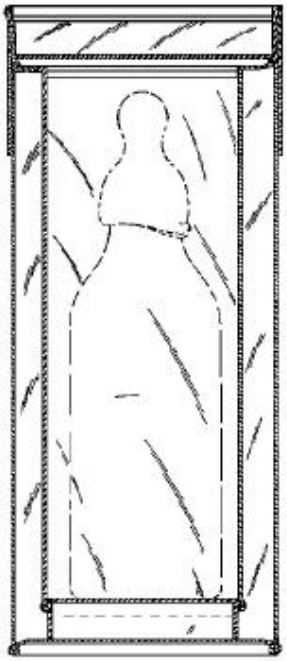

Special rules of classification within this group

ALSO USED AS Indexing Code

B65D 81/3883

[N: provided with liquid material between double walls]

Definition statement

This subclass/group covers:
Illustrative example of subject matter classified in this group:

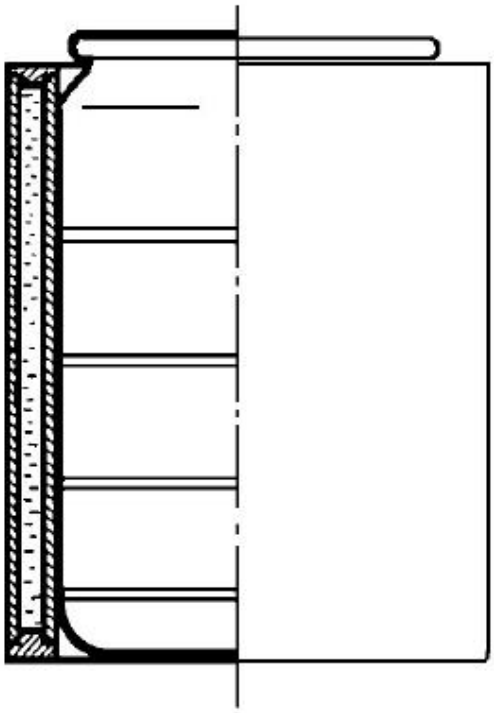

Special rules of classification within this group

ALSO USED AS Indexing Code

B65D 81/3886

[N: formed of different materials, e.g. laminated or foam filling between walls]

Definition statement

This subclass/group covers:

Illustrative example of subject matter classified in this group:

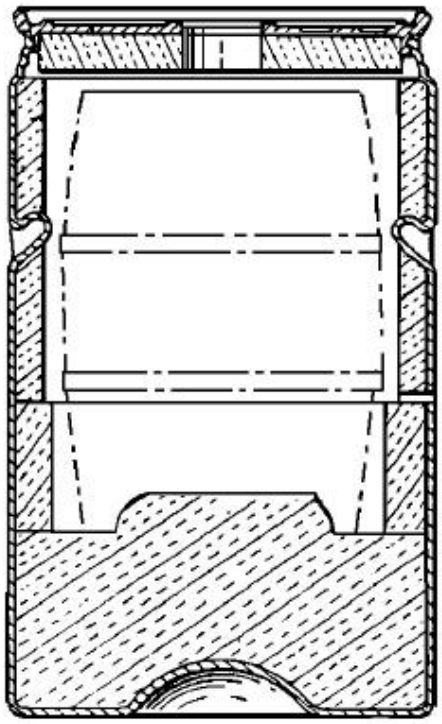

Special rules of classification within this group

ALSO USED AS Indexing Code

B65D 81/3893

[N: formed with double walls, i.e. hollow]

Definition statement

This subclass/group covers:
Illustrative example of subject matter classified in this group:

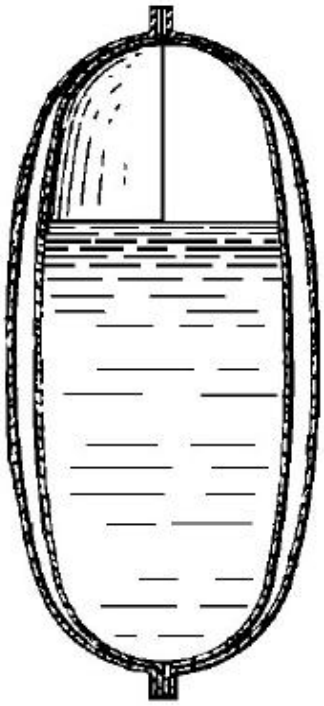

Special rules of classification within this group

ALSO USED AS Indexing Code

B65D 81/3897

[N: formed of different materials, e.g. laminated or foam filling between walls]

Definition statement

This subclass/group covers:

Illustrative example of subject matter classified in this group:

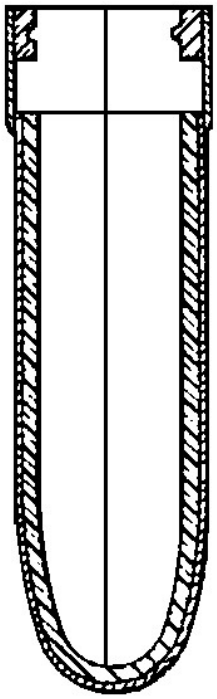

Special rules of classification within this group

ALSO USED AS Indexing Code

B65D 83/00

Containers or packages with special means for dispensing contents (dispensing means incorporated in removable or non-permanently secured container closures B65D 47/00; for shops, stores, offices, bars, or the like A47F 1/04; showcases or cabinets with dispensing arrangements A47F 3/02; [N: for surgical articles A61B 19/026]; magazines for screws or nuts in combination with spanners, wrenches or screw-drivers B25B 23/06; nail dispensers B25C 3/00; for use in connection with the handling of sheets, webs, or filamentary material B65H; coin deliverers G07D 1/00; [N: coin-freed apparatus for dispensing discrete articles G07F 11/00])

References relevant to classification in this group

This subclass/group does not cover:

Dispensers for nested articles from the top	A47F 1/065
Dispensers for nested articles from the bottom	A47F 1/085

Packages or dispensers for surgical gloves	A61B 19/045
Packages or dispensers for prostheses	A61F 2/0095
Packages or dispensers for intraocular lenses	A61F 2/1691
Dispensing containers for dressings or bandages	A61F 15/00
Containers having means for evaporating the content, e.g. deodorant, insecticide	A61L 9/12
Ink cartridges	B41J 2/17503

Special rules of classification within this group

The use of available Indexing Codes is mandatory.

B65D 83/0005

[N: Containers or packages provided with a piston or with a movable bottom or partition having approximately the same section as the container (B65D 83/0072 takes precedence)]

Definition statement

This subclass/group covers:

Illustrative example of subject matter classified in this group.

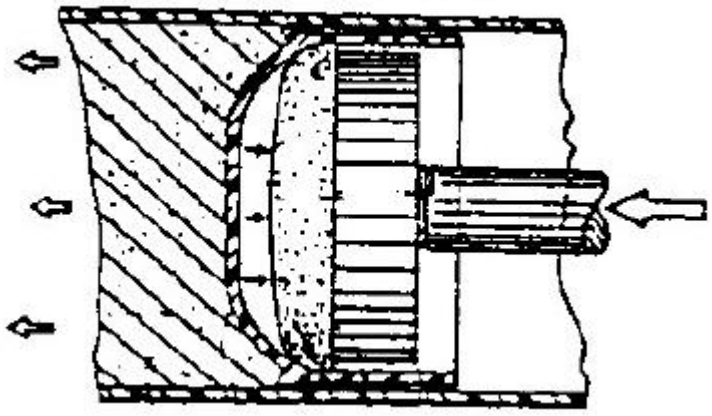

References relevant to classification in this group

This subclass/group does not cover:

Hand tools for discharging fluent material through an outlet orifice by pressure	B05C 17/005
Pistons for pliable tubular containers	B65D 35/30
Floating covers	B65D 81/245
The contents of a flexible bag being expelled by a piston or a movable bottom or partition provided in the container or the package	B65D 83/0072
Containers comprising an internal rotating wing for expelling the contents	B65D 83/0083

Informative references

Attention is drawn to the following places, which may be of interest for search:

Spraying apparatus for discharge of liquids or other fluent material, without essentially mixing with gas or vapour, supply being effected by follower in container	B05B 9/0838

Special rules of classification within this group

The use of available Indexing Codes is mandatory.

B65D 83/0011

[N: moved by a screw-shaft]

Definition statement

This subclass/group covers:
Illustrative example of subject matter classified in this group.

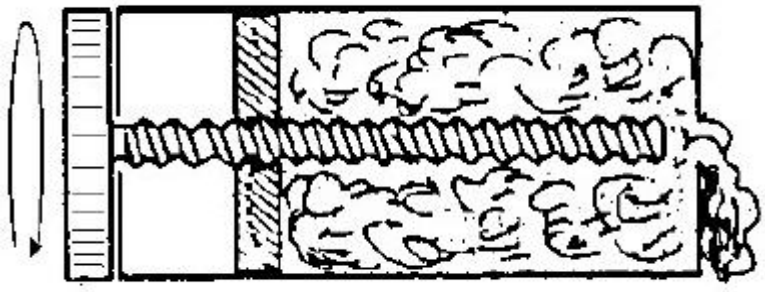

B65D 83/0016

[N: the contents being forced out through the screw-shaft]

Definition statement

This subclass/group covers:
Illustrative example of subject matter classified in this group.

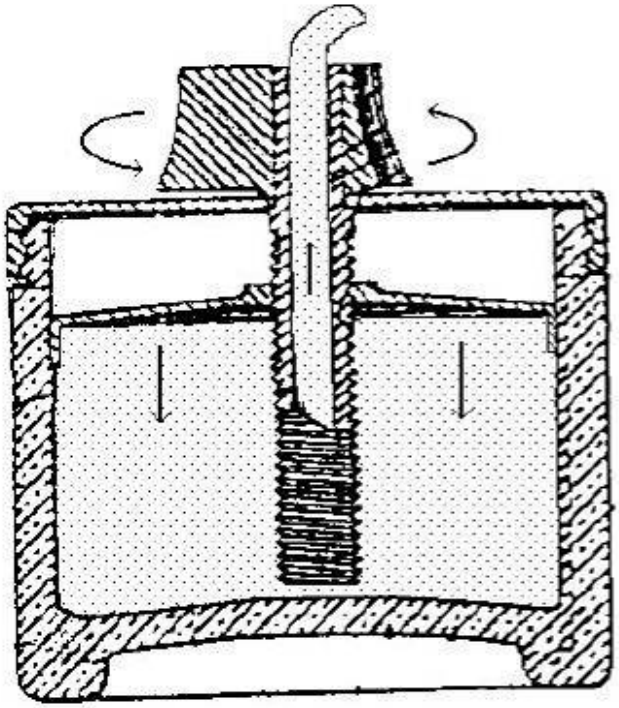

Informative references

Attention is drawn to the following places, which may be of interest for search:

Spraying apparatus for discharge of liquids or other fluent material, without essentially mixing with gas or vapour, supply being effected by follower in container	B05B 9/0838

B65D 83/0022

[N: moved by a reciprocable plunger]

Definition statement

This subclass/group covers:

Illustrative example of subject matter classified in this group.

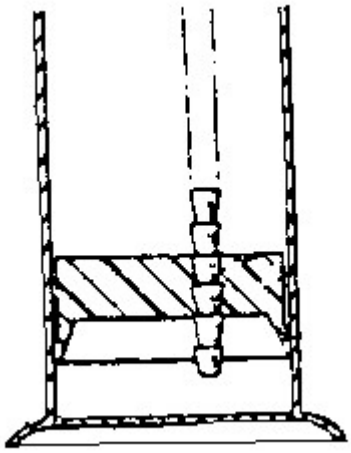

Informative references

Attention is drawn to the following places, which may be of interest for search:

Spraying apparatus for discharge of liquids or other fluent material, without essentially mixing with gas or vapour, supply being effected by follower in container	B05B 9/0838

B65D 83/0027

[N: piston co-operating with a screw-thread in the side wall of the container]

Definition statement

This subclass/group covers:

Illustrative example of subject matter classified in this group.

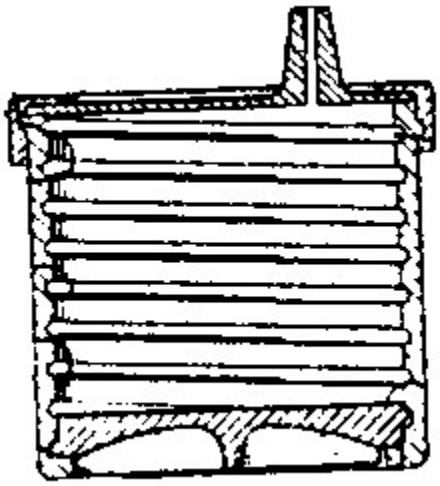

Informative references

Attention is drawn to the following places, which may be of interest for search:

Spraying apparatus for discharge of liquids or other fluent material, without essentially mixing with gas or vapour supply being effected by follower in container	B05B 9/047

B65D 83/0033

[N: the piston being a follower-piston and the dispensing means comprising a hand-operated pressure-device at the opposite part of the container]

Definition statement

This subclass/group covers:

Illustrative example of subject matter classified in this group.

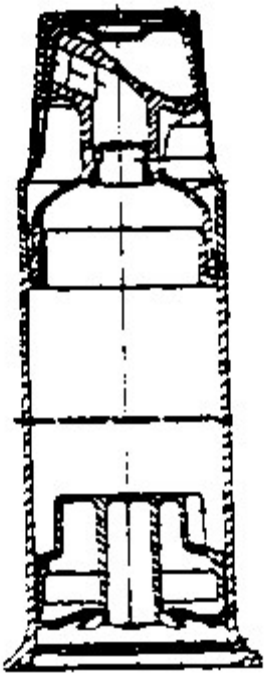

References relevant to classification in this group

This subclass/group does not cover:

Twin-valves, i.e. hand-operated pumps with a suction AND a discharge valve for dispensing or spraying liquids or other fluent material, e.g. paste	B05B 11/00
Other pumps for dispensing liquids, e.g. air pumps	B67D

Informative references

Attention is drawn to the following places, which may be of interest for search:

Spraying apparatus for discharge of liquids or other fluent material, without essentially mixing with gas or vapour supply being effected by follower in container	B05B 9/047

B65D 83/0038

[N: moved by a spring-like mechanism (B65D 83/005, B65D 83/0817, B65D 83/0858 take precedence)]

Definition statement

This subclass/group covers:

Illustrative example of subject matter classified in this group.

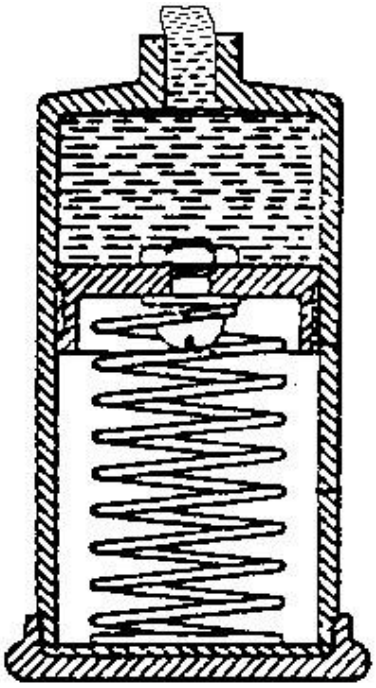

References relevant to classification in this group

This subclass/group does not cover:

Containers or packages provided with a piston or with a movable bottom or partition having approximately the same section as the container the piston or movable bottom being pulled upwards to dispense the contents	B65D 83/005
Dispensing thin flat articles in succession through an aperture in a wall, the articles being automatically urged towards the dispensing aperture	B65D 83/0817
Dispensing thin flat articles in succession through an aperture at the junction of two walls, the articles	B65D 83/0858

being automatically urged towards the dispensing aperture	

Informative references

Attention is drawn to the following places, which may be of interest for search:

Spraying apparatus for discharge of liquids or other fluent material, without essentially mixing with gas or vapour supply being effected by follower in container	B05B 9/047
Moves by a spring-like mechanism	B65D 83/0077

B65D 83/0044

[N: the piston having a dispensing opening formed in the piston (B65D 83/0016 takes precedence)]

Definition statement

This subclass/group covers:

Illustrative example of subject matter classified in this group.

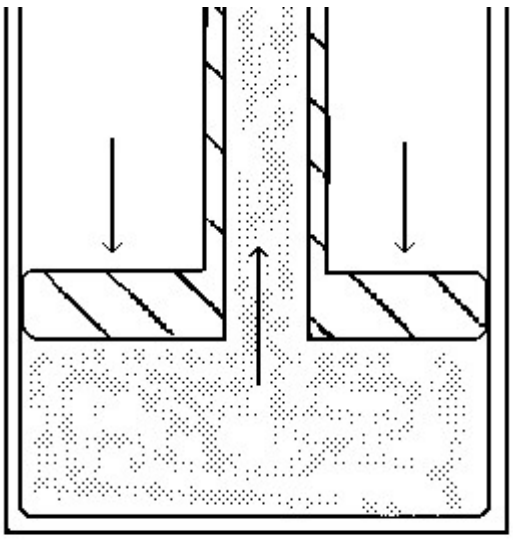

Informative references

Attention is drawn to the following places, which may be of interest for search:

Spraying apparatus for discharge of liquids or other fluent material, without essentially mixing with gas or vapour supply being effected by follower in container	B05B 9/047
The contents being forced out through the screw-shaft	B65D 83/0016

B65D 83/005

[N: the piston or movable bottom being pulled upwards to dispense the contents]

Definition statement

This subclass/group covers:

Illustrative example of subject matter classified in this group.

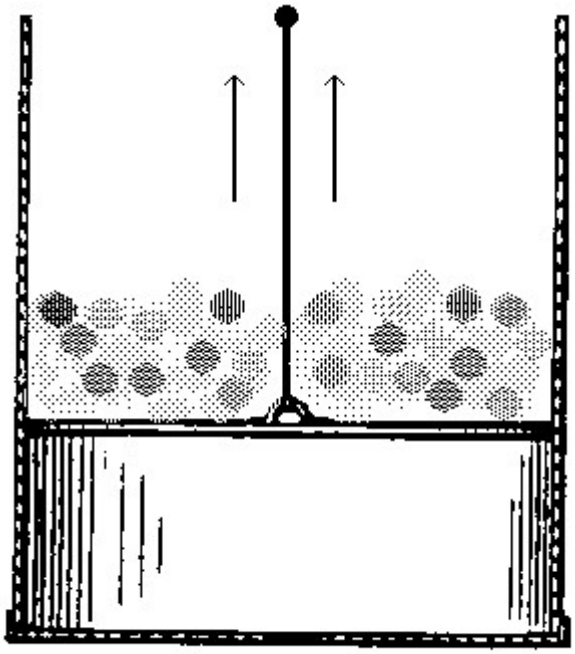

Informative references

Attention is drawn to the following places, which may be of interest for search:

Hand implements for separating solids from liquids or liquids from liquids	A47J 43/284

Spraying apparatus for discharge of liquids or other fluent material, without essentially mixing with gas or vapour supply being effected by follower in container	B05B 9/047

B65D 83/0055

[N: Containers or packages provided with a flexible bag or a deformable membrane or diaphragm for expelling the contents]

Definition statement

This subclass/group covers:

Illustrative example of subject matter classified in this group.

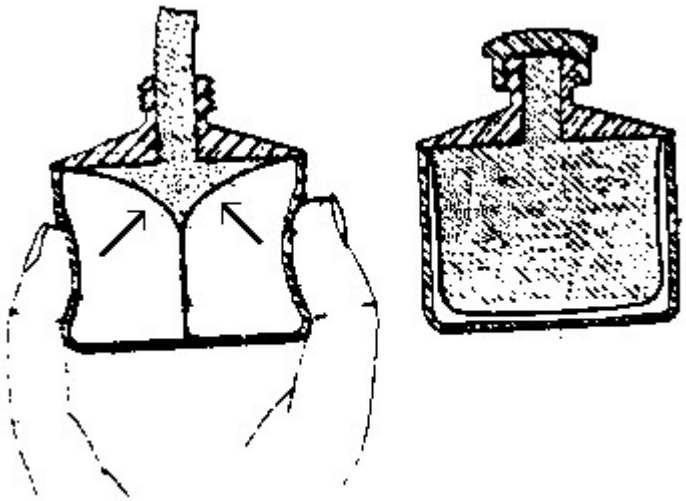

References relevant to classification in this group

This subclass/group does not cover:

The contents of a flexible bag being expelled by a piston or a movable bottom or partition provided in the container or the package	B65D 83/0072

Informative references

Attention is drawn to the following places, which may be of interest for search:

Apparatus utilising compressed air or other gas acting directly or indirectly on beverages in storage containers using elastic bags and pistons actuated by air or other gas	B67D 1/045

Special rules of classification within this group

The use of available Indexing Codes is mandatory.

B65D 83/0061

[N: the contents of a flexible bag being expelled by the contracting forces inherent in the bag or a sleeve fitting snugly around the bag]

Definition statement

This subclass/group covers:

Illustrative example of subject matter classified in this group.

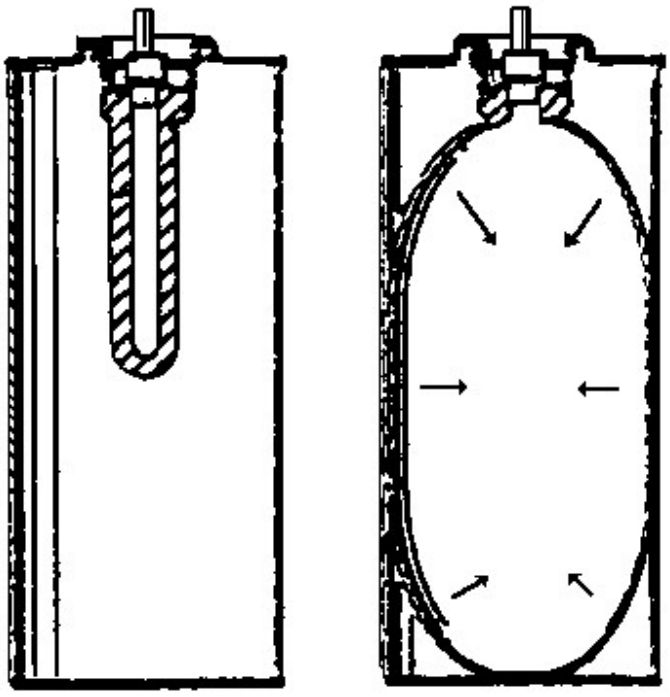

References relevant to classification in this group

This subclass/group does not cover:

Reservoirs for pressure infusion	A61M 5/152

pressurised by contraction of elastic reservoirs	

Special rules of classification within this group

The use of available Indexing Codes is mandatory.

B65D 83/0066

[N: the contents of a flexible bag being expelled by twisting the bag]

Definition statement

This subclass/group covers:

Illustrative example of subject matter classified in this group.

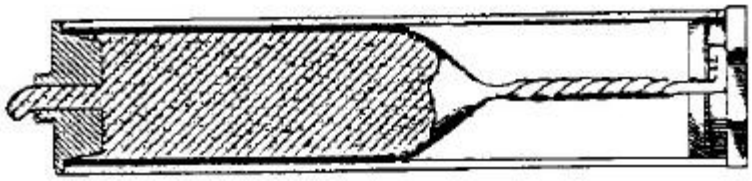

B65D 83/0072

[N: the contents of a flexible bag being expelled by a piston or a movable bottom or partition provided in the container or the package]

Definition statement

This subclass/group covers:

Illustrative example of subject matter classified in this group.

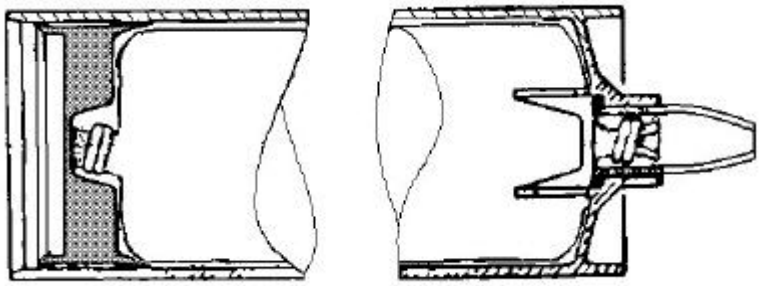

B65D 83/0077

[N: moves by a spring-like mechanism]

Definition statement

This subclass/group covers:
Illustrative example of subject matter classified in this group.

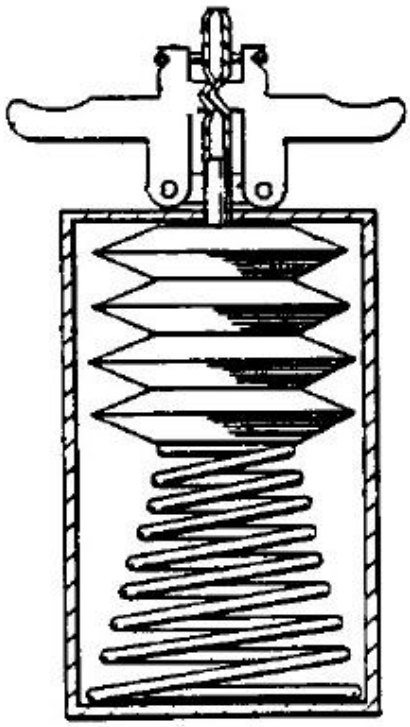

Informative references

Attention is drawn to the following places, which may be of interest for search:

Moved by a spring-like mechanism	B65D 83/0038

B65D 83/0083

[N: Containers comprising an internal rotating wing for expelling the contents]

Definition statement

This subclass/group covers:
Illustrative example of subject matter classified in this group.

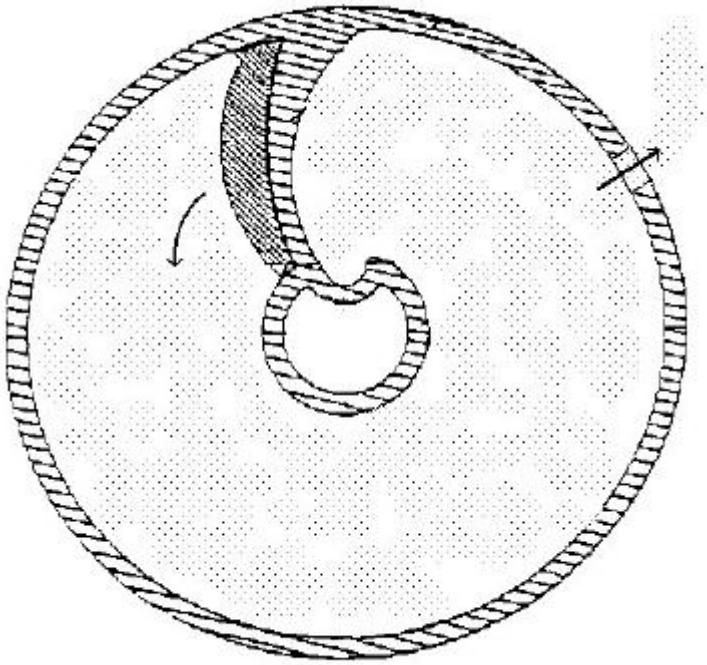

B65D 83/0088

[N: Packages containing several articles intended to be suspended from a display rod, e.g. blisters, i.e. the package being used to facilitate suspending the articles from the rod]

Definition statement

This subclass/group covers:

Illustrative example of subject matter classified in this group.

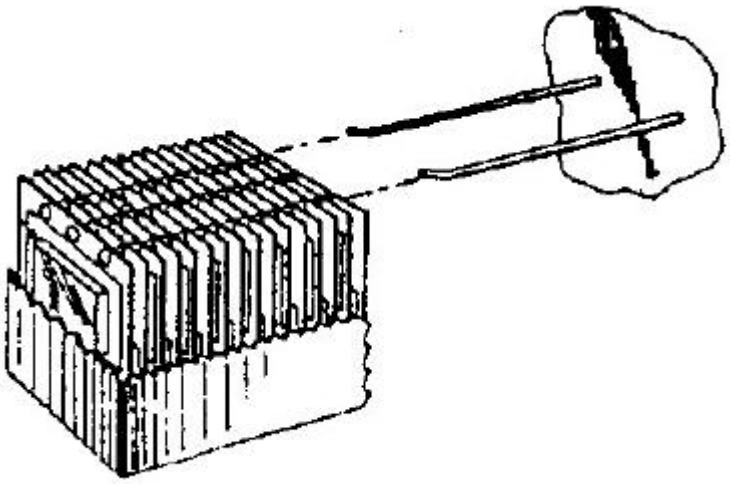

B65D 83/0094

[N: Containers having an external wall formed as, or with, a diaphragm or the like which is deformed to expel the contents (B65D 1/32 takes precedence)]

Definition statement

This subclass/group covers:

Illustrative example of subject matter classified in this group.

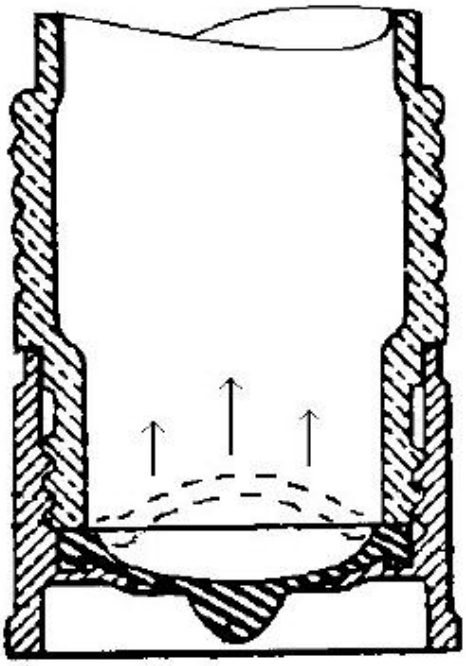

References relevant to classification in this group

This subclass/group does not cover:

Containers adapted to be temporarily deformed by external pressure to expel contents; containers for pharmaceutical purposes; containers with disinfecting linings; liquid sprayers; Kaufman type dispensers based on the siphon principle; oil cans	B65D 1/32

B65D 83/02

for dispensing rod-shaped articles, e.g. needles ([N: packages for cigarettes provided with dispensing means B65D 85/1009];

cigar or cigarette receptacles or boxes A24F 15/00; [N: dispensers for drinking straws A47G 21/184])

Definition statement

This subclass/group covers:

Illustrative example of subject matter classified in this group.

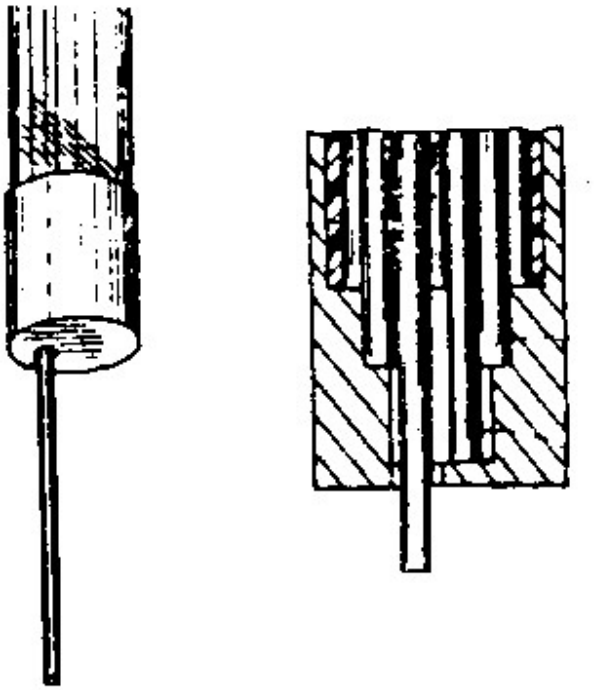

References relevant to classification in this group

This subclass/group does not cover:

Tooth-picks	A61C 15/02
Tooth-pick holders	A47G 21/12
Cotton-swabs per se	A45D, A61F 11/00, B65D 13/00, A61M 35/00
Dispensers for bandages, swab sticks	A61F 15/001
Dispensers for catamenial tampons	A61F 15/003
Distributors for pencil leads, cartridges and the like	B43K 31/005

Informative references

Attention is drawn to the following places, which may be of interest for search:

Containers, packaging elements or packages specially adapted for needles, nails, or other like elongated small articles	B65D 85/24

B65D 83/04

for dispensing annular, disc-shaped, spherical, or like small articles, e.g. tablets, pills

References relevant to classification in this group

This subclass/group does not cover:

Racks for dispensing granulated or powdered materials	A47F 1/02
Arrangement for time indication or reminder for taking medicine	**A47J7/04B**
Medicament distribution means	A61J 7/00
Devices for breaking pills	A61J 7/0007
For dispensing tickets or tokens	B65D 83/12
Coin & token deliverers	G07D 1/00
Cases for miniature batteries	H01M 2/1022
Cases for button cells	H01M 2/1038

Informative references

Attention is drawn to the following places, which may be of interest for search:

For dispensing powdered or granular material	B65D 83/06

Special rules of classification within this group

The use of available Indexing Codes is mandatory.

B65D 83/0409

[N: the dispensing means being adapted for delivering one article, or a single dose, upon each actuation (B65D 83/0445 takes precedence)]

References relevant to classification in this group

This subclass/group does not cover:

All the articles being stored in individual compartments	B65D 83/0445
The dispensing means forming a part of a removable closure, e.g. gripping teeth, cavity	B65D 83/049

Informative references

Attention is drawn to the following places, which may be of interest for search:

For dispensing powdered or granular material	B65D 83/06

Special rules of classification within this group

The use of available Indexing Codes is mandatory.

B65D 83/0418

[N: the articles being substantially flat and stacked one upon the other and the dispensing-closing device sliding the article to be dispensed along the flat side of the next article]

Definition statement

This subclass/group covers:

Illustrative example of subject matter classified in this group.

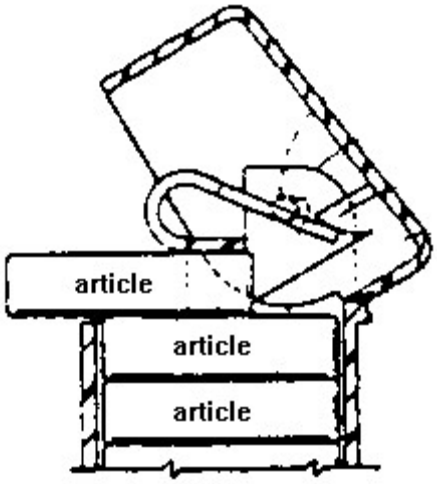

Informative references

Attention is drawn to the following places, which may be of interest for search:

For dispensing powdered or granular material	B65D 83/06

Special rules of classification within this group

The use of available Indexing Codes is mandatory.

B65D 83/0427

[N: the articles being dispensed by inverting the container each time, by which action movable parts may be displaced by their own weight]

Definition statement

This subclass/group covers:

Illustrative example of subject matter classified in this group.

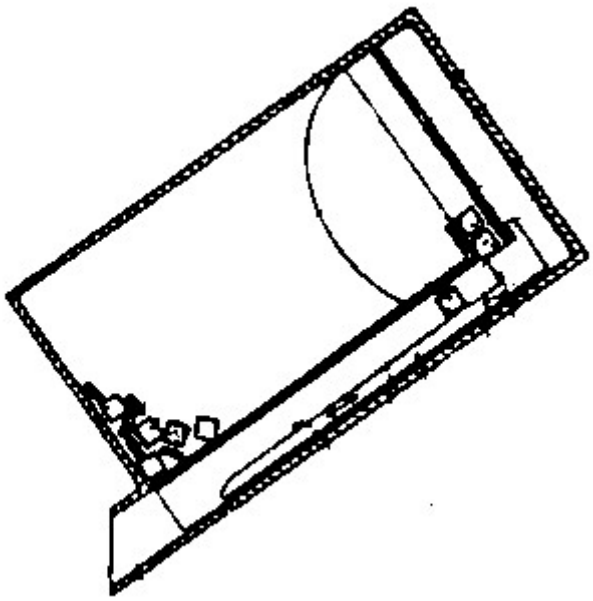

Informative references

Attention is drawn to the following places, which may be of interest for search:

For dispensing powdered or granular material	B65D 83/06

Special rules of classification within this group

The use of available Indexing Codes is mandatory.

B65D 83/0436

[N: the articles being dispensed by pinching action on a flexible tube]

Definition statement

This subclass/group covers:

Illustrative example of subject matter classified in this group.

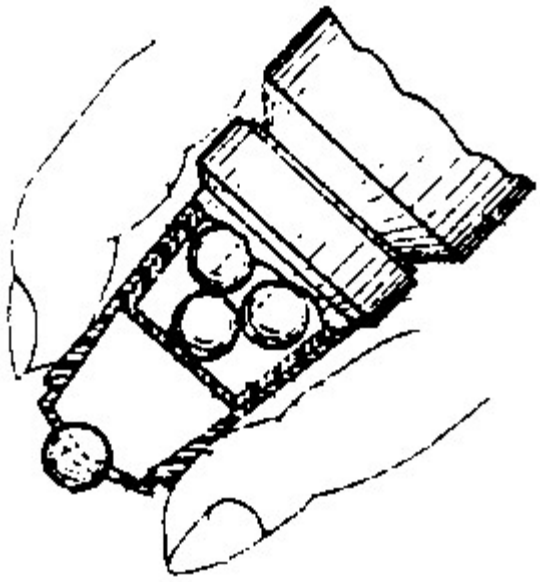

References relevant to classification in this group

This subclass/group does not cover:

Pinching action without retaining the following articles comprising hand-operated members for controlling discharge	B65D 83/0481

Informative references

Attention is drawn to the following places, which may be of interest for search:

Closures with discharging devices other than pumps	B65D 47/20
For dispensing powdered or granular material	B65D 83/06

Special rules of classification within this group

The use of available Indexing Codes is mandatory.

B65D 83/0445

[N: all the articles being stored in individual compartments]

References relevant to classification in this group

This subclass/group does not cover:

Compartmented boxes, the compartments of which have to be filled for each period	A61J 1/03

Special rules of classification within this group

The use of available Indexing Codes is mandatory.

B65D 83/0454

[N: the whole forming a circular container with rotating parts (B65D 83/0463 takes precedence)]

Definition statement

This subclass/group covers:

Illustrative example of subject matter classified in this group.

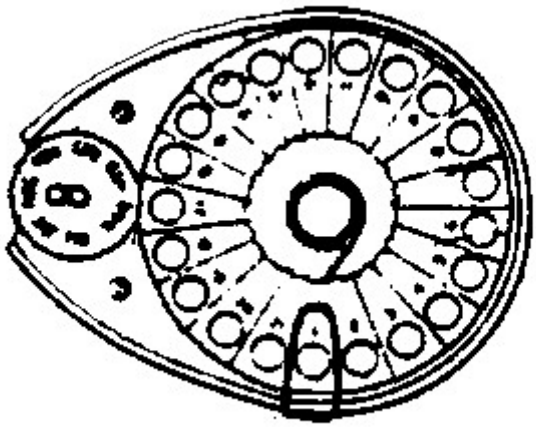

References relevant to classification in this group

This subclass/group does not cover:

Compartmented boxes, the compartments of which have to be filled for each period	A61J 1/03
Formed in a band or a blisterweb, inserted in a dispensing device or	B65D 83/0463

container	

Special rules of classification within this group

The use of available Indexing Codes is mandatory.

B65D 83/0463

[N: formed in a band or a blisterweb, inserted in a dispensing device or container]

Definition statement

This subclass/group covers:

Illustrative example of subject matter classified in this group.

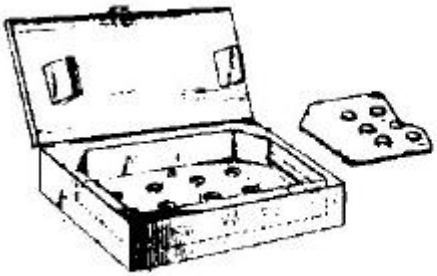

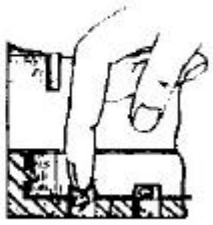

Informative references

Attention is drawn to the following places, which may be of interest for search:

Unpacking of articles or materials, not otherwise provided for, by expelling solid contents	B65B 69/0058

Special rules of classification within this group

The use of available Indexing Codes is mandatory.

B65D 83/0472

[N: the band being wound in flat spiral, folded in accordion or the like]

Definition statement

This subclass/group covers:
Illustrative example of subject matter classified in this group.

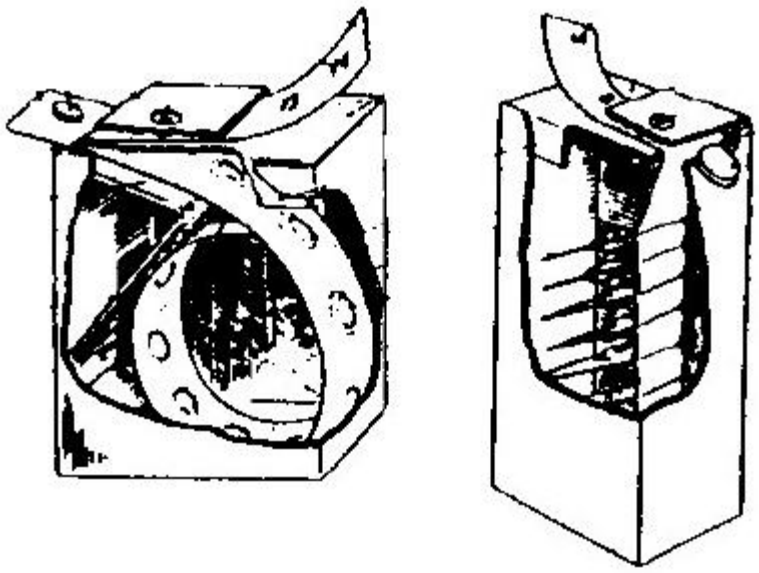

Special rules of classification within this group

The use of available Indexing Codes is mandatory.

B65D 83/0481

[N: the articles passing through a small opening or passage, without additional dispensing devices and without retaining means for the following article]

Definition statement

This subclass/group covers:
Illustrative examples of subject matter classified in this group.

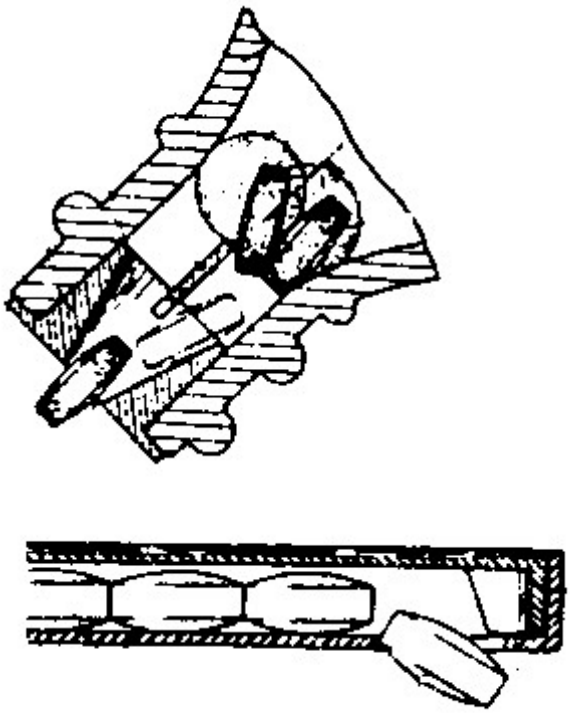

Informative references

Attention is drawn to the following places, which may be of interest for search:

The articles being dispensed by pinching action on a flexible tube	B65D 83/0436

Special rules of classification within this group

The use of available Indexing Codes is mandatory.

B65D 83/049

[N: the dispensing means forming a part of a removable closure, e.g. gripping teeth, cavity]

Definition statement

This subclass/group covers:

Illustrative example of subject matter classified in this group.

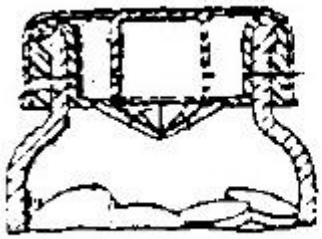

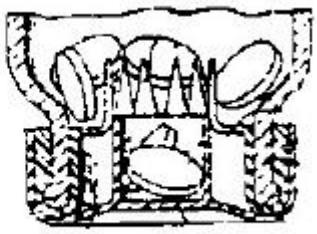

Informative references

Attention is drawn to the following places, which may be of interest for search:

For dispensing powdered or granular material	B65D 83/06

Special rules of classification within this group

The use of available Indexing Codes is mandatory.

B65D 83/06

for dispensing powdered or granular material ([N: B65D 83/04 takes precedence]; spraying or atomising apparatus in general B05B)

Definition statement

This subclass/group covers:

Illustrative example of subject matter classified in this group.

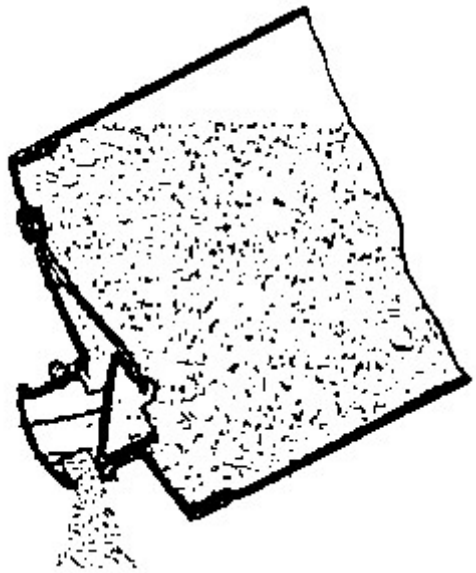

References relevant to classification in this group

This subclass/group does not cover:

For dispensing also small articles	B65D 83/04
Racks for dispensing granulated or powdered materials	A47F 1/02
Measuring apparatus for volume of fluent solid material	A47F 1/02

B65D 83/08

for dispensing thin flat articles in succession [N: (towel dispensers intended for re-use A47K 10/24)]

References relevant to classification in this group

This subclass/group does not cover:

Cigarette paper	A24F 17/00
Dressings or bandages	A61F 15/00
Reusable dispenser for e.g. "post-it"	B42D 5/005
Dispensing also small articles	B65D 83/04
For dispensing razor-blades, tickets	B65D 83/10. B65D 83/12

or tokens	

B65D 83/0805

[N: through an aperture in a wall]

Definition statement

This subclass/group covers:

Illustrative example of subject matter classified in this group.

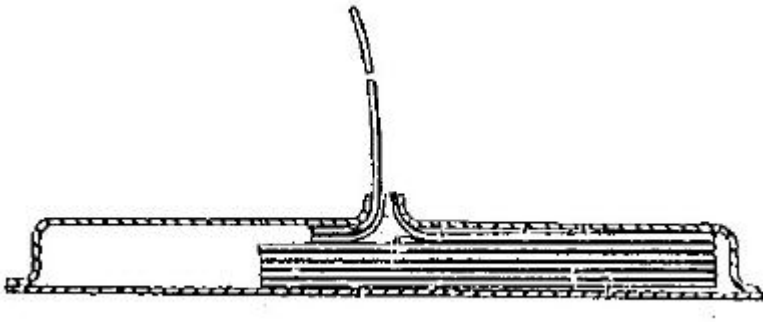

References relevant to classification in this group

This subclass/group does not cover:

With provision for used articles	B65D 83/0888
The articles being positioned relative to one another or to the container in a special way, e.g. for facilitating dispensing, without additional support	B65D 83/0894

B65D 83/0817

[N: the articles being automatically urged towards the dispensing aperture, e.g. spring-loaded (B65D 83/0823 takes precedence)]

Definition statement

This subclass/group covers:

Illustrative example of subject matter classified in this group.

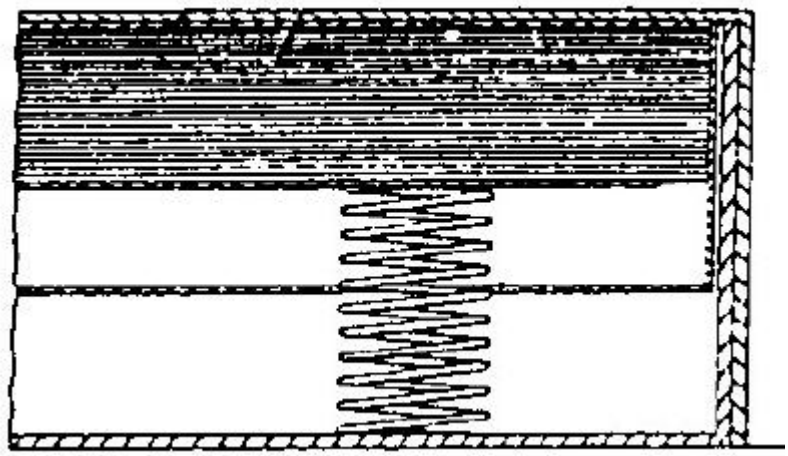

References relevant to classification in this group

This subclass/group does not cover:

The articles being pushed and slid through the aperture	B65D 83/0823

B65D 83/0823

[N: the articles being pushed and slid through the aperture]

Definition statement

This subclass/group covers:

Illustrative example of subject matter classified in this group.

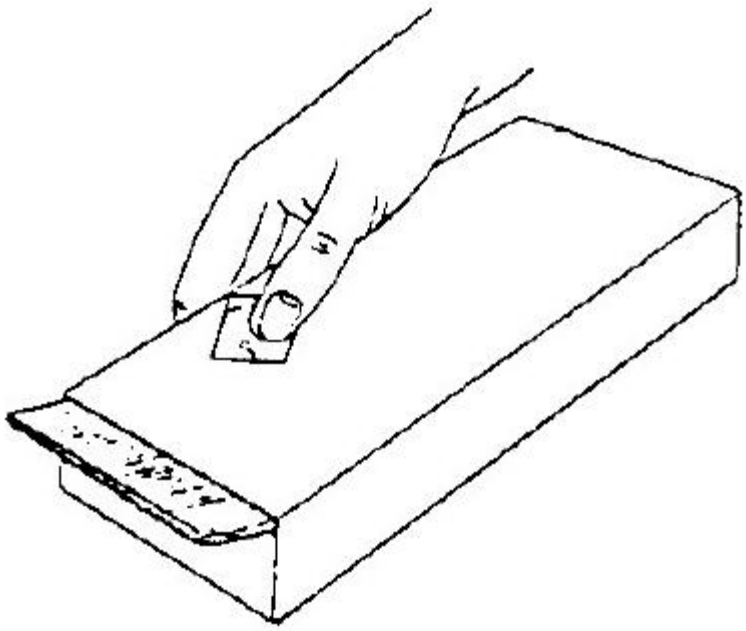

B65D 83/0829

[N: by means of an actuator]

Definition statement

This subclass/group covers:
Illustrative example of subject matter classified in this group.

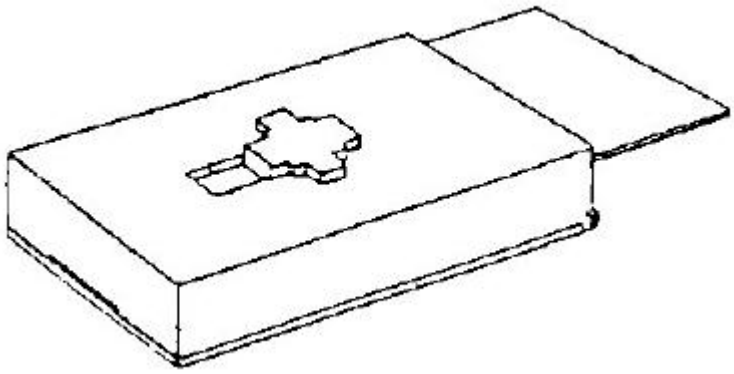

B65D 83/0835

[N: the articles being pulled out of the container]

Definition statement

This subclass/group covers:

Illustrative example of subject matter classified in this group.

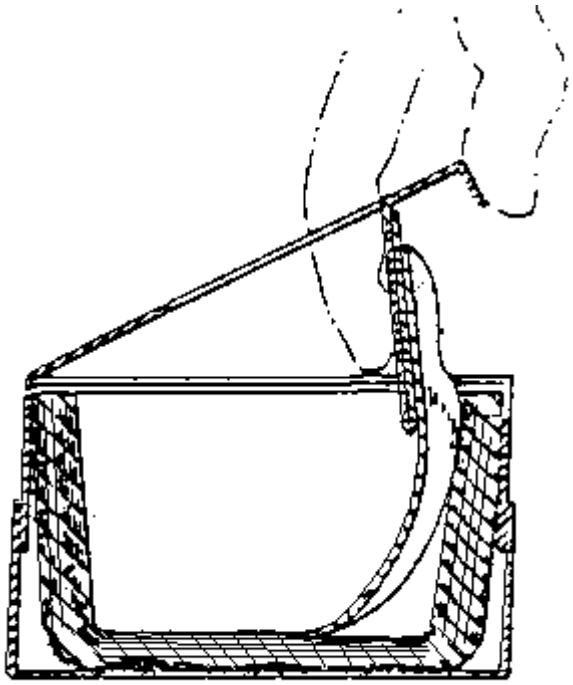

B65D 83/0841

[N: and for cutting interconnected articles (cutting devices for dispensers intended for re-use B65H 35/008)]

Definition statement

This subclass/group covers:

Illustrative example of subject matter classified in this group.

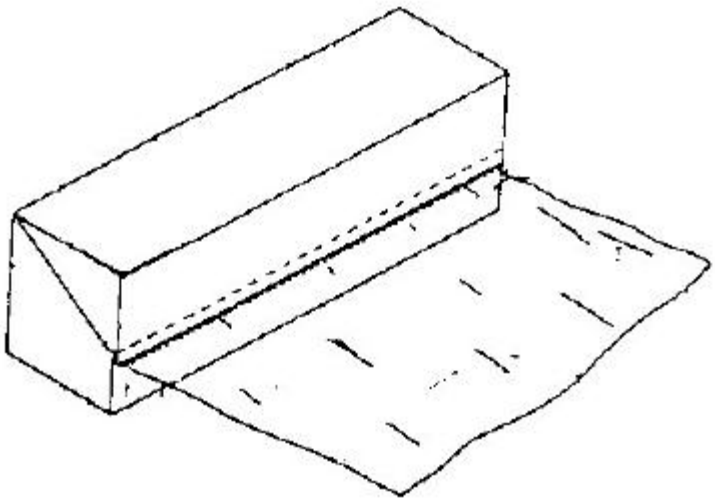

B65D 83/0847

[N: through an aperture at the junction of two walls]

Definition statement

This subclass/group covers:
Illustrative example of subject matter classified in this group.

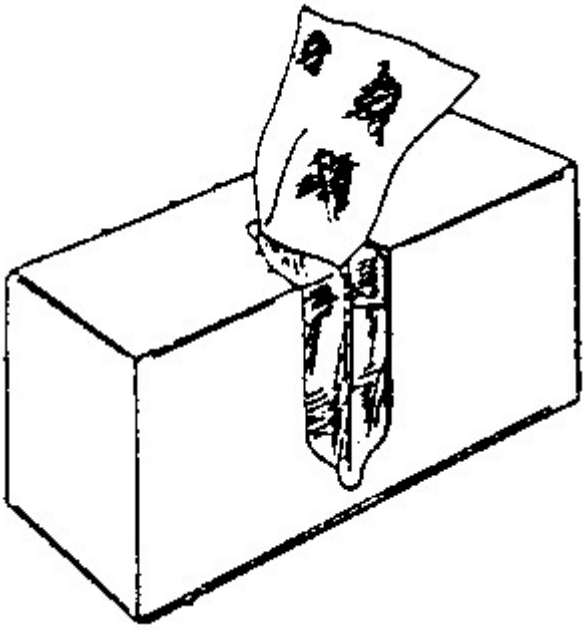

References relevant to classification in this group

This subclass/group does not cover:

With provision for used articles	B65D 83/0888
The articles being positioned relative to one another or to the container in a special way, e.g. for facilitating dispensing, without additional support	B65D 83/0894

B65D 83/0858

[N: the articles being automatically urged towards the dispensing aperture, e.g. spring-loaded (B65D 83/0864 takes precedence)]

Definition statement

This subclass/group covers:
Illustrative example of subject matter classified in this group.

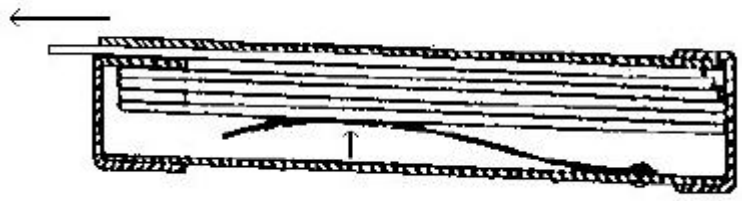

References relevant to classification in this group

This subclass/group does not cover:

The articles being pushed and slid through the aperture	B65D 83/0864

B65D 83/0864

[N: the articles being pushed and slid through the aperture]

Definition statement

This subclass/group covers:
Illustrative example of subject matter classified in this group.

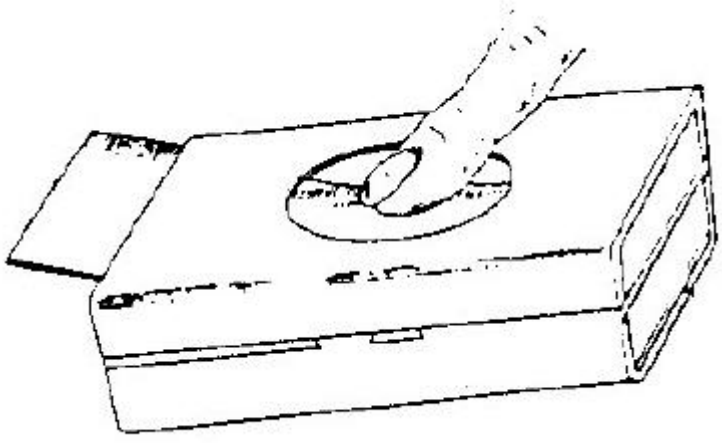

B65D 83/087

[N: by means of an actuator]

Definition statement

This subclass/group covers:
Illustrative example of subject matter classified in this group.

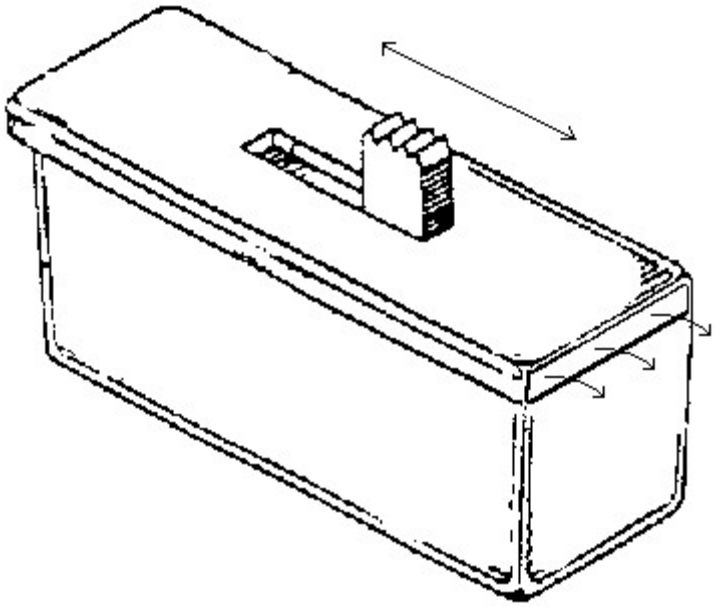

B65D 83/0876

[N: the articles being pulled out of the container]

Definition statement

This subclass/group covers:
Illustrative example of subject matter classified in this group.

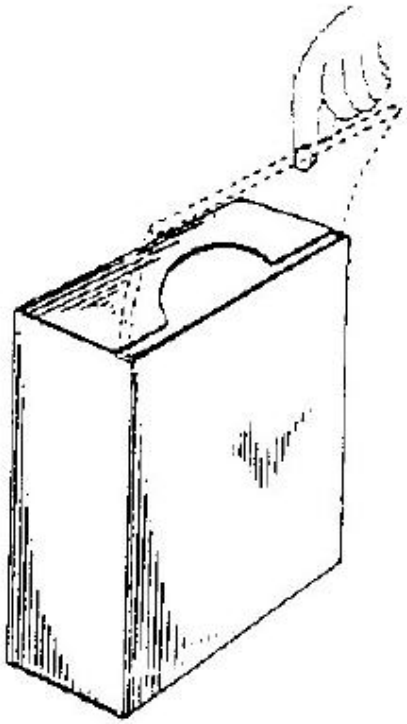

B65D 83/0882

[N: and for cutting interconnected articles (cutting devices for dispensers intended for re-use B65H 35/008)]

Definition statement

This subclass/group covers:

Illustrative example of subject matter classified in this group.

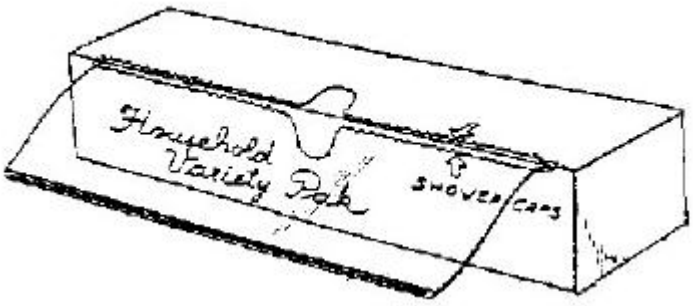

B65D 83/0888

[N: with provision for used articles]

Definition statement

This subclass/group covers:

Illustrative example of subject matter classified in this group.

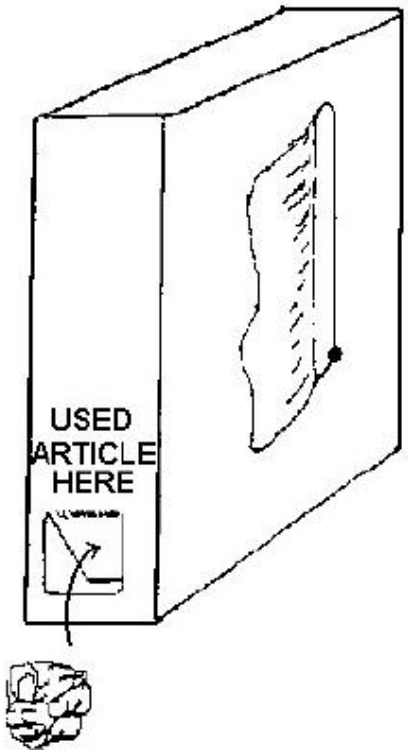

References relevant to classification in this group

This subclass/group does not cover:

For other applications	B65D 2209/00

B65D 83/0894

[N: the articles being positioned relative to one another or to the container in a special way, e.g. for facilitating dispensing, without additional support]

Definition statement

This subclass/group covers:

Illustrative example of subject matter classified in this group.

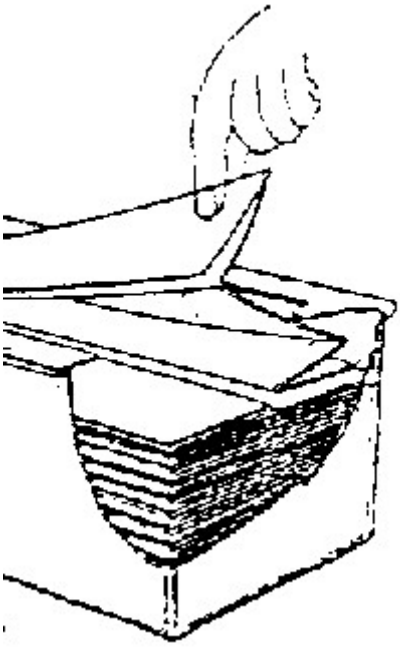

B65D 83/10

for dispensing razor-blades

Definition statement

This subclass/group covers:
Illustrative example of subject matter classified in this group.

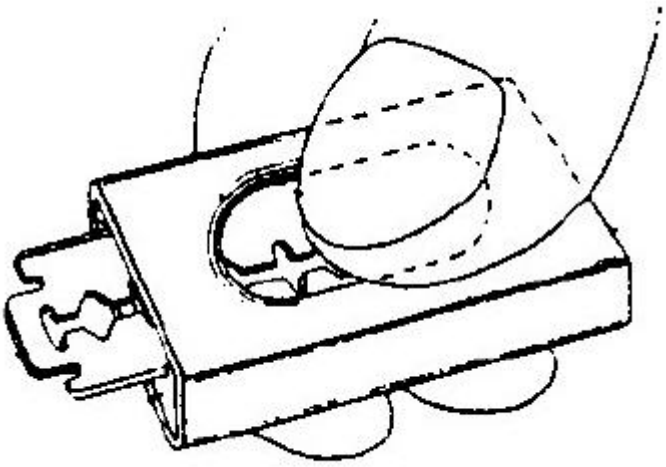

References relevant to classification in this group

This subclass/group does not cover:

Carriers for storing razor cartridges	A45D 27/24

Razors, safety razors in general	B26B 21/00

B65D 83/12

for dispensing tickets or tokens

Definition statement

This subclass/group covers:
Illustrative example of subject matter classified in this group.

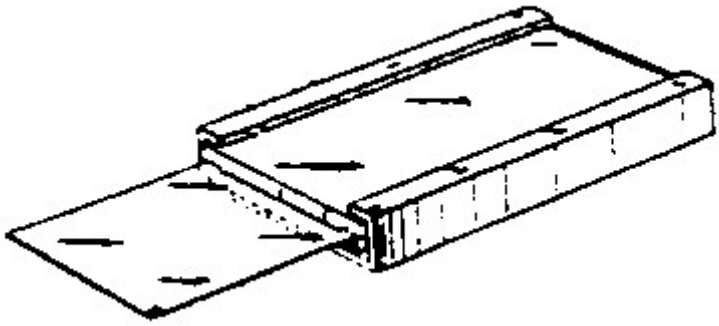

Informative references

Attention is drawn to the following places, which may be of interest for search:

Racks for dispensing merchandise; Containers for dispensing merchandise	A47F 1/00

B65D 83/14

for delivery of liquid or semi-liquid contents by internal gaseous pressure, i.e. aerosol containers [N: for a product delivered by a propellant (spraying devices for the destruction of noxious animals or plants A01M 7/00, for therapeutic purposes A61M 11/00; spraying or atomizing apparatus in general B05B; aerosol compositions, e.g. propellants C09K 3/30; pumping of fluid by direct contact of another fluid, e.g. siphons F04F; fluid-delivery valves in general F16K 21/00; discharge nozzles in general F16K 31/58; vessels for containing or storing compressed, liquefied, or solidified

gases F17C)]

References relevant to classification in this group

This subclass/group does not cover:

Removing gases or liquids enclosed in discarded aerosol cans	B09B 3/0058

B65D 83/14N

[N: one part of the contents being initially separated from the other part, but being finally mixed]

Definition statement

This subclass/group covers:

E.g. mixing in the dispensing head.

References relevant to classification in this group

This subclass/group does not cover:

Mixing of the contents in predetermined proportions, e.g. by means of a valve or by flow rate	B01F 15/04, G01F, G01G

B65D 83/14Z

[N: Aerosol containers not provided for in other subgroups of B65D 83/14]

References relevant to classification in this group

This subclass/group does not cover:

Removing gases or liquids enclosed in discarded aerosol cans	B09B 3/0058

B65D 83/14Z3

[N: characterised by the use of specific products or propellants]

References relevant to classification in this group

This subclass/group does not cover:

Biocides, pest repellents or attractants, or plant growth regulators	A01N 25/06
Milk preparations, yoghurts, cream, etc	A23C
Coffee; coffee substitutes; preparations thereof	A23F 5/243
Cosmetics or similar toilet preparations	**A61K7/00M2**
Medicinal preparations	A61K 9/12
Air fresheners	A61L
Sterilising materials	A61L 2/22
Paints, varnishes or lacquers	C09D 5/02
Aerosol compositions	C09K 3/30
Lubricants	**C10N50/04**
Detergent materials	C11D 17/0043

B65D 83/14Z6

[comprising connectors, e.g. for tires, or actuators connected to the aerosol container by a flexible tube (auto-repairing or self-sealing arrangement for repairing plastic articles B29C 73/16)]

Informative references

Attention is drawn to the following places, which may be of interest for search:

Auto-repairing or self-sealing arrangement or agents	B29C 73/16

B65D 83/16

characterised by the actuating means [N: (actuation occurring by moving the aerosol container relative to an outer shell B65D 83/386; involved in metering valve assemblies B65D 83/546)]

References relevant to classification in this group

This subclass/group does not cover:

For delivery of liquid or semi-liquid contents by internal gaseous pressure	**B65D83/14L5A**
Marking apparatus with wheeled frame, marking material being supplied in aerosol containers	E01C 23/22

B65D 83/38

Details of container body (pressure relief devices B65D 83/70)

Definition statement

This subclass/group covers:

E.g. outer decorative housing.

E.g. all plastic construction.

E.g. valve cups and connection of upper part to container, e.g. plastic valve cups.

References relevant to classification in this group

This subclass/group does not cover:

For delivery of liquid or semi-liquid contents by internal gaseous pressure, i.e. aerosol containers	B65D 83/14

B65D 83/60

Product and propellant separated [N: (portable fire extinguishers wherein extinguishing material and pressure

gas are stored in separate containers A62C 13/66)]

References relevant to classification in this group

This subclass/group does not cover:

Mixing in the dispensing head	**B65D83/14N**

B65D 83/62

by membrane, bag, or the like [N: (containers in which the content is delivered by the contracting forces inherent in the bag B65D 83/0061)]

References relevant to classification in this group

This subclass/group does not cover:

Self-contracting bag without propellant	B65D 83/0061
Spraying apparatus for discharge of liquids or other fluent material, without essentially mixing with gas or vapour supply being effected by follower in container	B05B 9/047

B65D 83/64

by piston

References relevant to classification in this group

This subclass/group does not cover:

Spraying apparatus for discharge of liquids or other fluent material, without essentially mixing with gas or vapour supply being effected by follower in container	B05B 9/047

B65D 83/643

[N: the propellant being generated by a chemical or

electrochemical reaction (for pressure gas in portable fire extinguishers A62C 13/02)]

References relevant to classification in this group

This subclass/group does not cover:

Fire extinguishers	**A62C5/08**, **A62C13/58**, **A62C35/48**

B65D 83/646

[N: the piston being provided with a dispensing opening through which the contents are dispensed (containers with such a dispensing piston, adapted for hand-held, manually operated spray apparatus B05B 11/0051, in general B65D 83/0044)]

Definition statement

This subclass/group covers:

E.g. pistons moving along a dispensing tube

References relevant to classification in this group

This subclass/group does not cover:

Containers or packages with special means for dispensing contents provided with a piston having a dispensing opening formed in the piston	B65D 83/0044

B65D 85/00

Containers, packaging elements or packages specially adapted for particular articles or materials (B65D 71/00, B65D 83/00 take precedence; hand implements, travelling equipment A45C; cosmetic or toilet equipment A45D; [N: for surgical instruments or appliances A61B 19/026]; containers specially adapted for medical or pharmaceutical purposes A61J 1/00; paint cans B44D 3/12; oil cans F16N 3/04; containers for carrying smallarms F41C 33/06; packaging of ammunition or explosive charges F42B 39/00; containers for record carriers, specially adapted for co-operation with the

recording or reproducing apparatus G11B 23/00)

References relevant to classification in this group

This subclass/group does not cover:

For needles	A41H 19/00
Contact lenses cases	A45C 11/005
For pencils	A45C 11/34
For storing medals, badges, or the like	A47G 1/12
Disposable barbecue packages containing a quantity of fuel	A47J 37/0768
For surgical needles or sutures	A61B 17/06114
For surgical gloves or the like	A61B 19/045
For bandages, cotton-wool or the like	A61F 15/001
For prosthesis, artificial limbs	A61F 2/0095
For implanted contact lenses	A61F 2/1691
For contraceptive devices	**A61F5/00P**
For catheters	A61M 25/002
Laboratory containers	B01L 3/00
For drills	B25H 3/003
For compost	C05F 17/02
For thermometers	G01K 1/08
For photosensitive or like materials, e.g.	G03C 3/00
For musical instruments, e.g. carrying cases,	G10G 7/005
For cassettes	G11B 23/023

For record carriers	G11B 33/04
For computers	G60F
For printed circuit boards	H05K 13/0069
For electronical components	H05K 13/0084

Special rules of classification within this group

Except for B65D 85/10 and subgroups, B65D 85/67 and subgroups, and B65D 85/804 and subgroups, the documents should as far as possible also be classed in the relevant groups of B65D 1/00 to B65D 83/00.

B65D 85/04

for coils of wire, rope, or hose

Definition statement

This subclass/group covers:

Illustrative example of subject matter classified in this group.

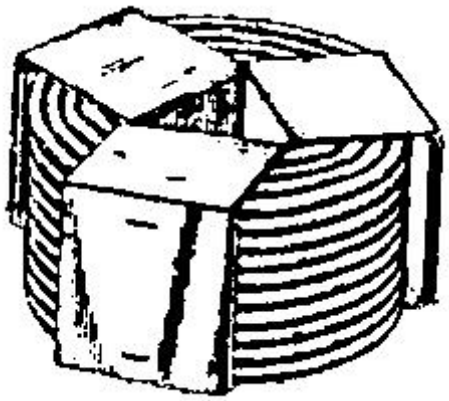

Informative references

Attention is drawn to the following places, which may be of interest for search:

Containers, packaging elements or packages for other web or tape-like material wound in helical form	B65D 85/675
Containers, packaging elements or packages for other web or tape-like	B65D 85/676

material wound in helical form on cores	
Containers, packaging elements or packages for other web or tape-like material wound in helical form on flat cards	B65D 85/677
Storing webs, tapes, or filamentary material	B65H 75/00

B65D 85/06

for tyres

Definition statement

This subclass/group covers:

Illustrative example of subject matter classified in this group.

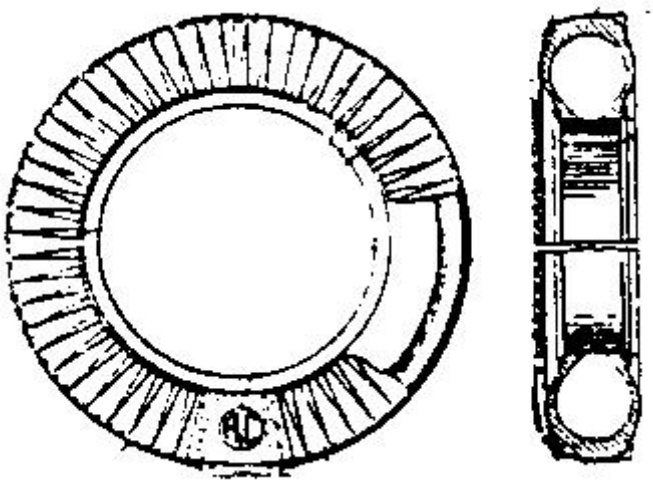

References relevant to classification in this group

This subclass/group does not cover:

Wheels per se	B60B
Tyres per se	B60C

B65D 85/10

for cigarettes

References relevant to classification in this group

This subclass/group does not cover:

Cigar or cigarette receptacles or boxes	A24F 15/00

B65D 85/1009

[N: provided with proffering means (B65D 85/1054 takes precedence)]

Definition statement

This subclass/group covers:

Illustrative example of subject matter classified in this group.

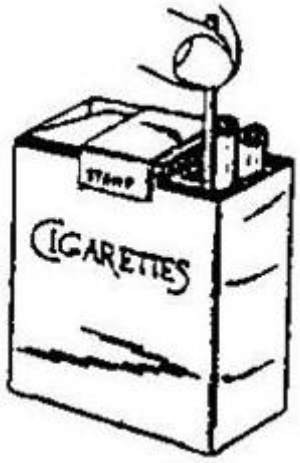

References relevant to classification in this group

This subclass/group does not cover:

Containers formed by erecting a rigid or semi-rigid blank combined with an outer sleeve connected to the lid	B65D 85/1054

Informative references

Attention is drawn to the following places, which may be of interest for search:

Internal elements supporting the contents and movable for displaying them, e.g. movable bottoms or trays	B65D 5/5213

B65D 85/1018

[N: Container formed by a flexible material, i.e. soft-packages]

Definition statement

This subclass/group covers:

Illustrative example of subject matter classified in this group.

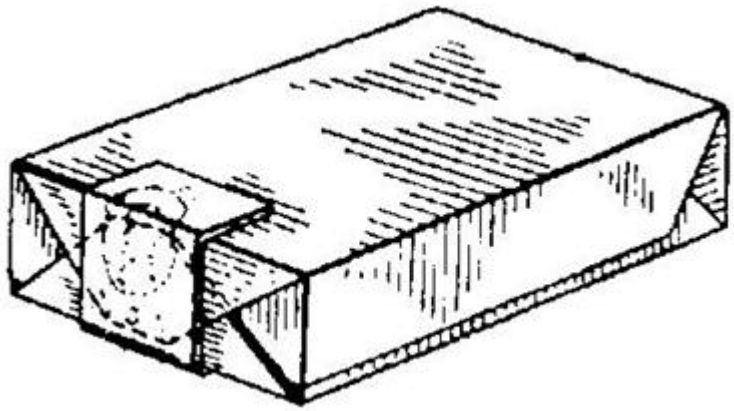

References relevant to classification in this group

This subclass/group does not cover:

Provided with proffering means	B65D 85/1009
Bundle of cigarette packs	B65D 85/1072
Inserts or accessories added or joined to the container, e.g. coins, pens, cards, spacers	B65D 85/1081

B65D 85/1027

[N: Opening devices]

Definition statement

This subclass/group covers:
Illustrative example of subject matter classified in this group.

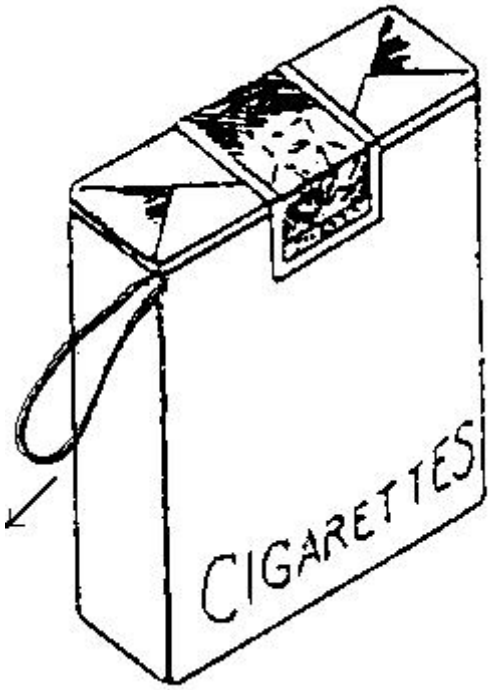

Informative references

Attention is drawn to the following places, which may be of interest for search:

Inserted or applied tearing-strings or like flexible elements extending through wrapper closure or between wrapper layers	B65D 75/68
Rigid cutting or tearing devices	B65D 75/70
Tearing-strings or like flexible elements	B65D 77/32

B65D 85/1036

[N: Containers formed by erecting a rigid or semi-rigid blank]

References relevant to classification in this group

This subclass/group does not cover:

Provided with proffering means	B65D 85/1009

Bundle of cigarette packs	B65D 85/1072
Inserts or accessories added or joined to the container, e.g. coins, pens, cards, spacers	B65D 85/1081

Informative references

Attention is drawn to the following places, which may be of interest for search:

Containers of polygonal cross-section, e.g. boxes, cartons, trays, formed by folding or erecting one or more blanks made of paper	B65D 5/00

B65D 85/1045

[N: having a cap-like lid hinged to an edge, i.e. flip-top type]

Definition statement

This subclass/group covers:

Illustrative example of subject matter classified in this group.

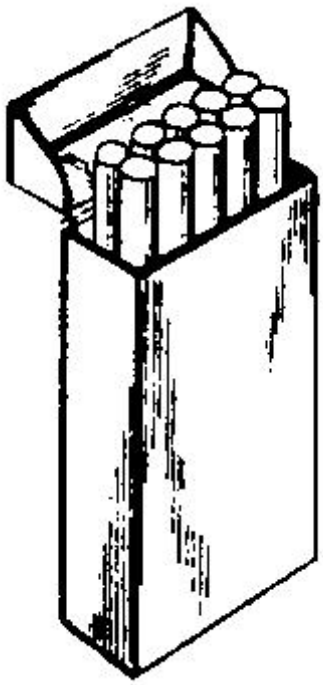

Informative references

Attention is drawn to the following places, which may be of interest for search:

Containers of polygonal cross-section the container being provided with an internal frame or the like for maintaining the lid in the closed position by friction	B65D 5/543
Hinged lids, being held in closed position by self-locking integral flaps	B65D 5/6608
Hinged lids, the container being provided with an internal frame or the like for maintaining the lid in the closed position by friction	B65D 5/662
Formed by extensions hinged to the upper edge of a container body formed by erecting a blank to U-shape	B65D 5/6685
The container being provided with an internal frame or the like for maintaining the lid in the closed position by friction	B65D 5/6691

B65D 85/1054

[N: combined with an outer sleeve connected to the lid]

Definition statement

This subclass/group covers:

Illustrative example of subject matter classified in this group.

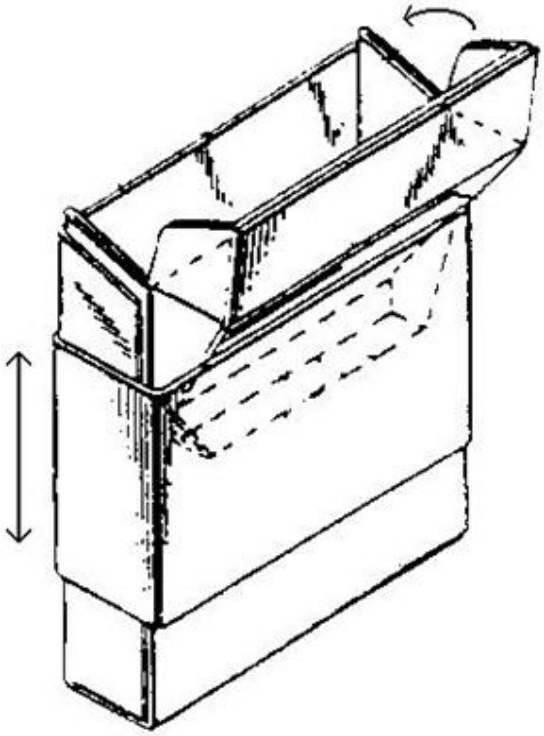

Informative references

Attention is drawn to the following places, which may be of interest for search:

Containers, packaging elements or packages for cigarettes provided with proffering means	B65D 85/1009
Drawer-and-shell type containers	B65D 5/38
The container body sliding in an outer sleeve	B65D 5/6688
Contents-dispensing means	B65D 5/728

B65D 85/1063

[N: so as to form two cigarette-compartments interconnected by a hinge-portion]

Definition statement

This subclass/group covers:

Illustrative example of subject matter classified in this group.

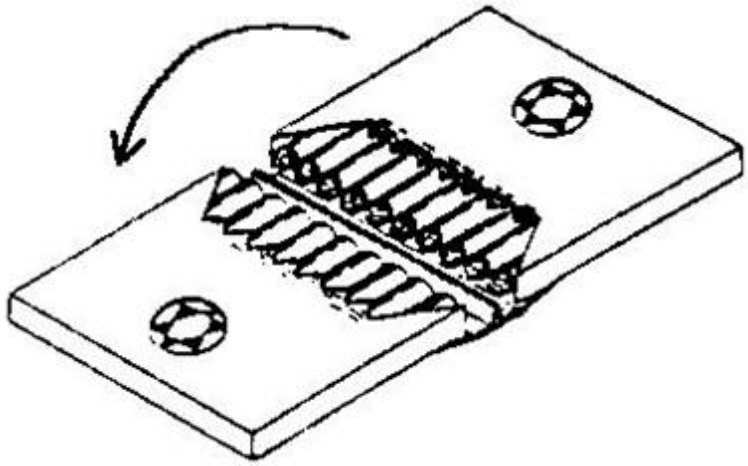

B65D 85/1072

[N: Bundle of cigarette packs]

Definition statement

This subclass/group covers:
Illustrative example of subject matter classified in this group.

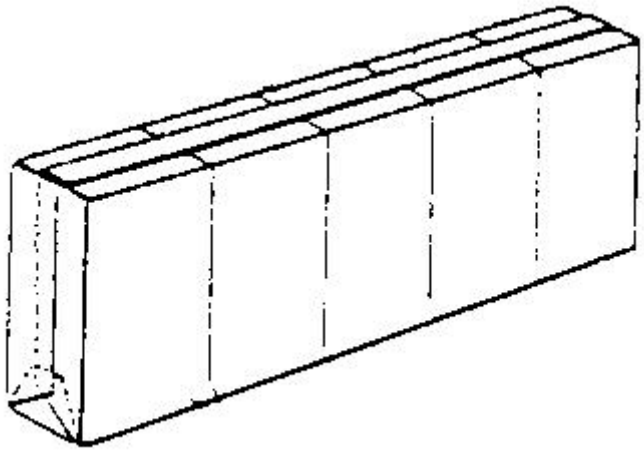

Informative references

Attention is drawn to the following places, which may be of interest for search:

Packages formed by enclosing articles or materials in preformed containers, e.g. boxes, cartons, sacks, bags	B65D 77/00

B65D 85/1081

[N: Inserts or accessories added or joined to the container, e.g. coins, pens, cards, spacers (B65D 85/1009 takes precedence)]

Definition statement

This subclass/group covers:

Illustrative example of subject matter classified in this group.

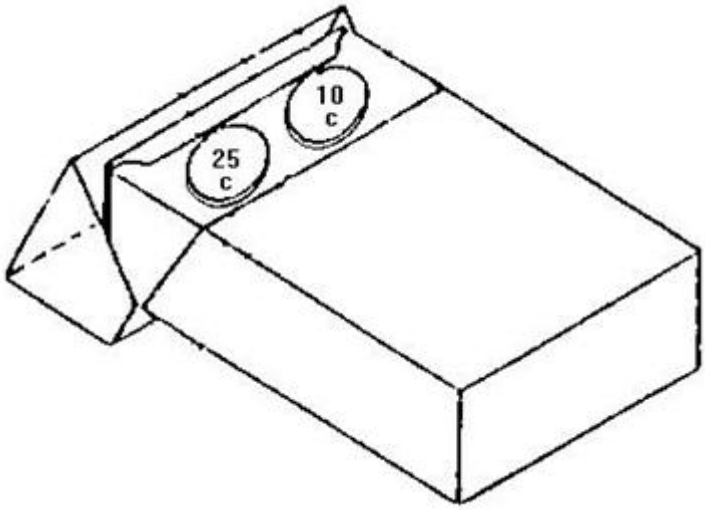

References relevant to classification in this group

This subclass/group does not cover:

Containers, packaging elements or packages specially adapted for particular articles or materials provided with proffering means	B65D 85/1009
Ashtrays	B65D 2209/00

Informative references

Attention is drawn to the following places, which may be of interest for search:

Cigar or cigarette receptacles or boxes combined with other objects	A24F 15/18
Cards, coupons, or other inserts or accessories	B65D 75/54

Inserts or accessories added or incorporated during filling of containers	B65D 77/24
Adaptations for preventing deterioration or decay of contents; Applications to the container or packaging material of food preservatives, fungicides, pesticides or animal repellents	B65D 81/24

B65D 85/109

[N: Lighting means, e.g. matches, lighters]

Definition statement

This subclass/group covers:

Illustrative example of subject matter classified in this group.

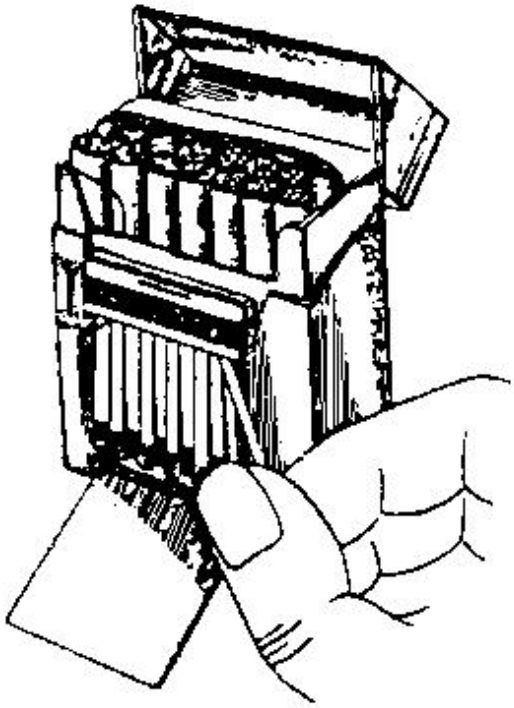

B65D 85/12

for cigars

Definition statement

This subclass/group covers:
Illustrative example of subject matter classified in this group.

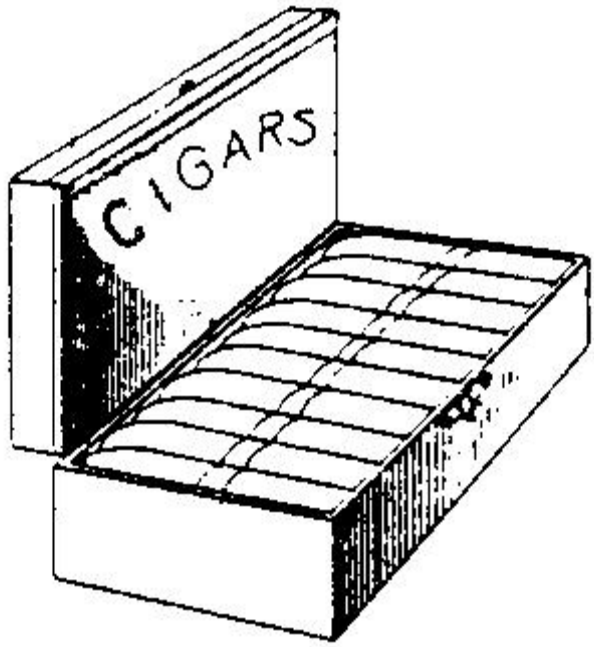

Informative references

Attention is drawn to the following places, which may be of interest for search:

Cigar or cigarette receptacles or boxes	A24F 15/00

B65D 85/16

for compressible or flexible articles of other shapes (for wearing apparel B65D 85/18)

Definition statement

This subclass/group covers:
Illustrative example of subject matter classified in this group.

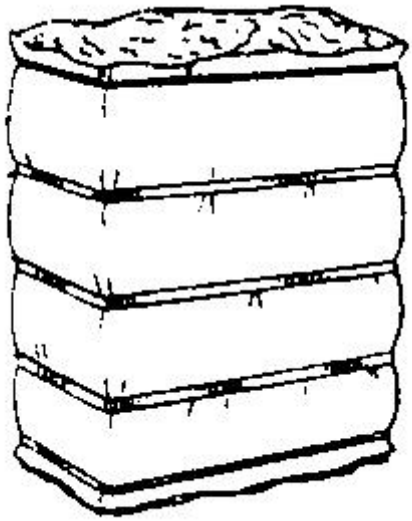

B65D 85/18

for wearing apparel, i.e. clothes, headgear, shoes

References relevant to classification in this group

This subclass/group does not cover:

Bags for shoes	A45C 3/12
Protective bags provided with coat hangers	A47G 25/54
Apparatus for folding textile articles to be worn	D06F 89/02

B65D 85/182

[N: Shirt packaging and display supports]

Definition statement

This subclass/group covers:

Illustrative example of subject matter classified in this group.

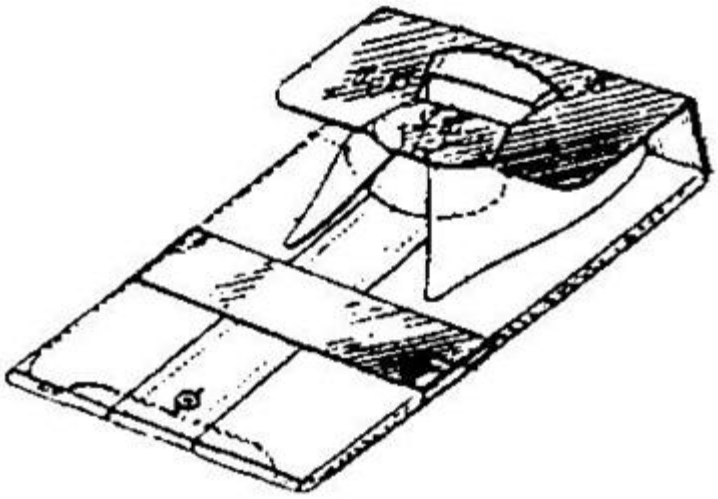

References relevant to classification in this group

This subclass/group does not cover:

Collar protectors	A41B 3/18
Apparatus for folding textile articles to be worn, e.g. shirts	D06F 89/023

B65D 85/185

[N: Containers for shipping garments on hangers (travelling or trunk wardrobes A47B 61/06)]

Definition statement

This subclass/group covers:

Illustrative example of subject matter classified in this group.

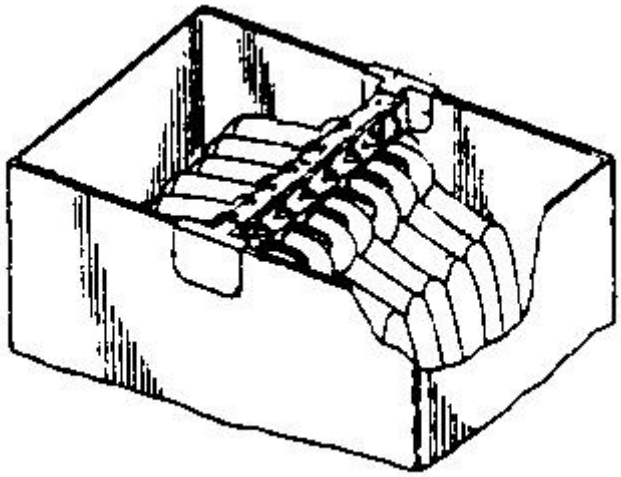

B65D 85/187

[N: for footwear]

References relevant to classification in this group

This subclass/group does not cover:

Bags for shoes	A45C 3/12
Socks or the like	B65D 85/18

B65D 85/20

for incompressible or rigid rod-shaped or tubular articles

References relevant to classification in this group

This subclass/group does not cover:

Trays for tools or instruments for workshops	B25H 3/06
Common support for several parallel pipes	F16L 3/223
Packaging or storage for arrows or darts	F42B 39/007

B65D 85/24

for needles, nails, or other like elongated small articles

References relevant to classification in this group

This subclass/group does not cover:

Holders or packages for surgical needles or suture materials	A61B 17/06
Nail magazine	B25C 3/00
Holders for drill bits or the like	B25H 3/003
Dispensers	B65D 83/02
Nails or staples formed in integral series but easily separable	F16B 15/08

B65D 85/30

for articles particularly sensitive to damage by shock or pressure

References relevant to classification in this group

This subclass/group does not cover:

Protection rings	B65D 85/307

B65D 85/302

[N: for carboys]

Definition statement

This subclass/group covers:

Illustrative example of subject matter classified in this group.

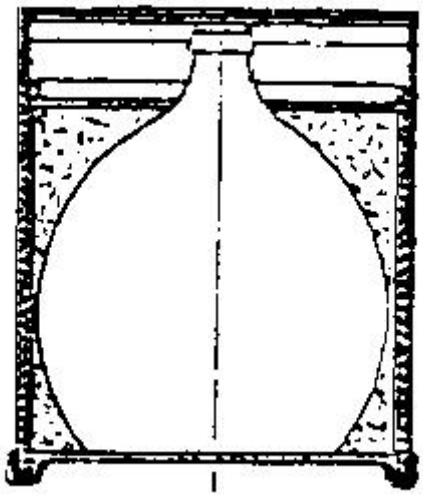

B65D 85/305

[N: Bottle-crates (formed in one piece B65D 1/243)]

Definition statement

This subclass/group covers:
Illustrative example of subject matter classified in this group.

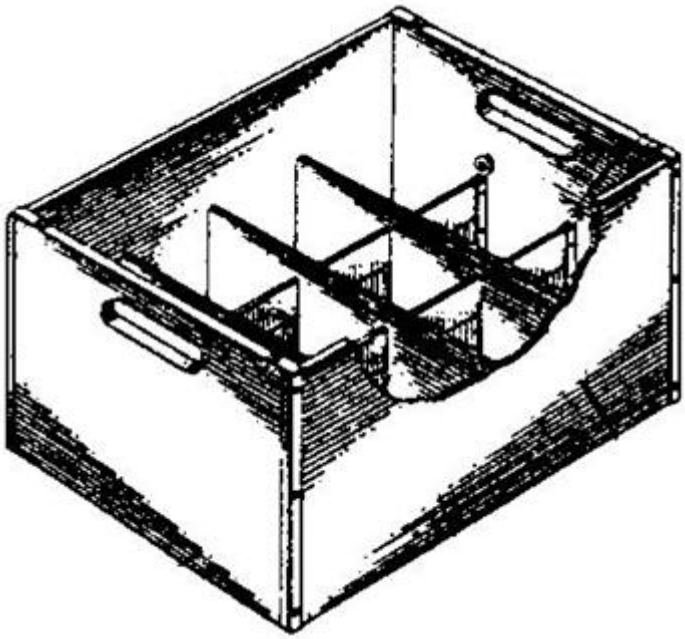

B65D 85/307

[N: Local shock-absorbing elements, e.g. elastic rings]

Definition statement

This subclass/group covers:
Illustrative example of subject matter classified in this group.

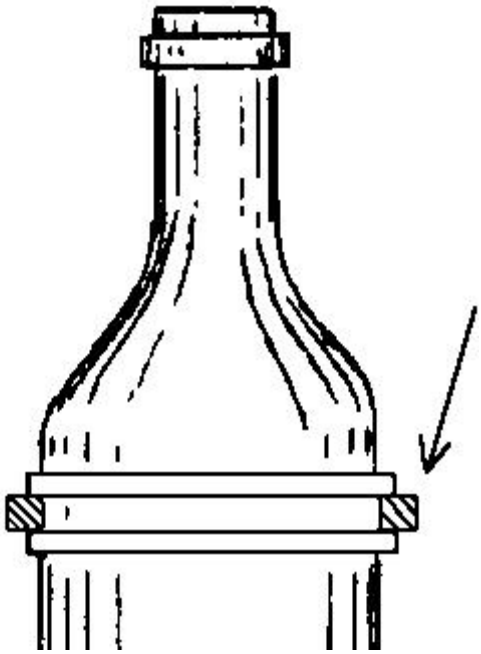

B65D 85/32

for eggs

References relevant to classification in this group

This subclass/group does not cover:

Eggs suspended in a container	B65D 81/07
For Easter or chocolate eggs	B65D 85/60

B65D 85/321

[N: Trays made of pressed carton and provided with recesses]

Definition statement

This subclass/group covers:
Illustrative example of subject matter classified in this group.

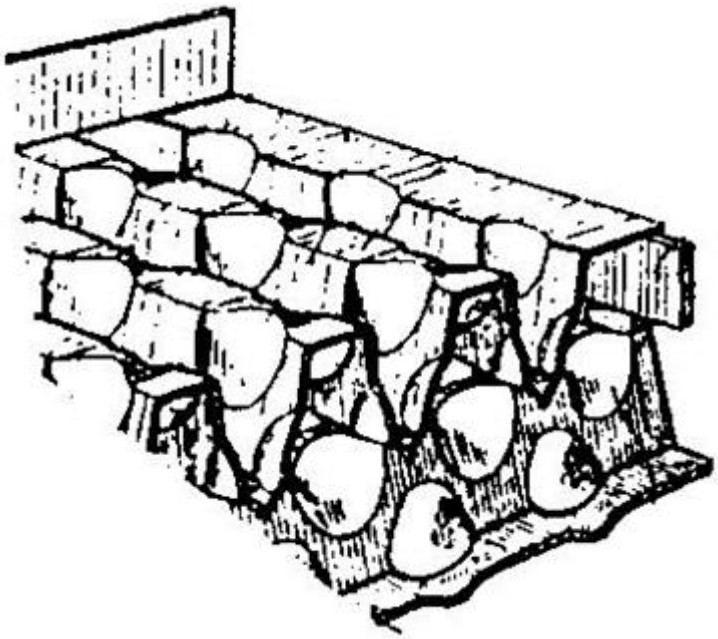

B65D 85/322

[N: Trays made of pressed material, e.g. paper pulp]

Definition statement

This subclass/group covers:
Illustrative example of subject matter classified in this group.

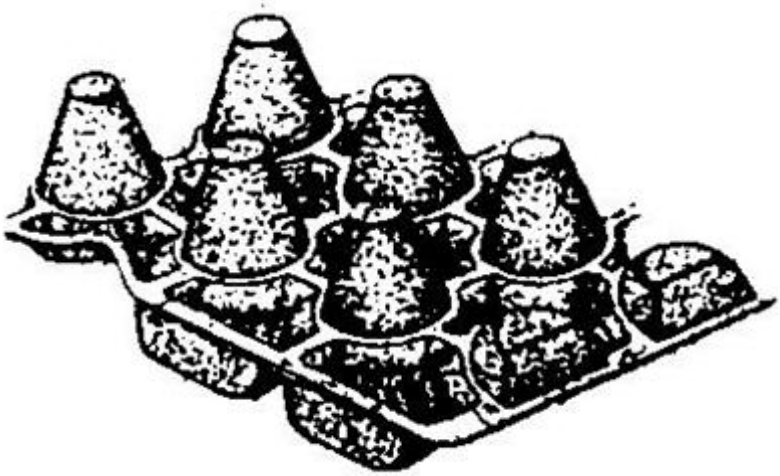

B65D 85/324

[N: Containers with compartments made of pressed material]

Definition statement

This subclass/group covers:
Illustrative example of subject matter classified in this group.

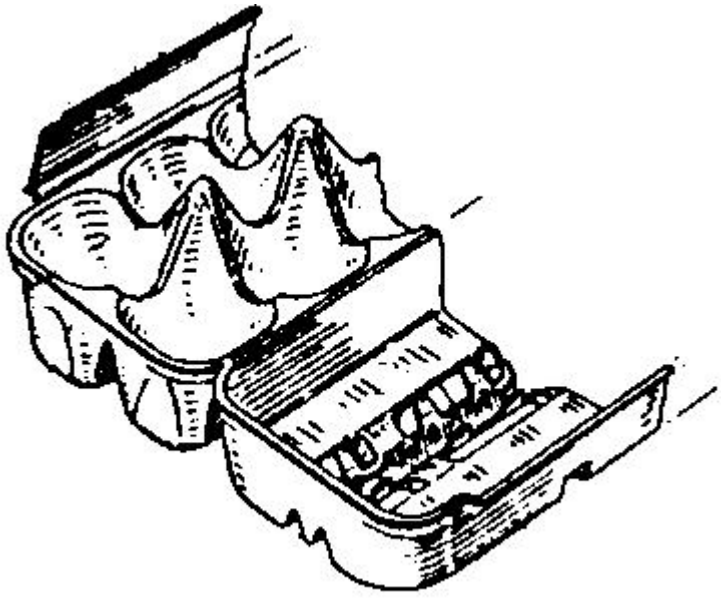

B65D 85/325

[N: Containers with compartments formed by erecting one blank]

Definition statement

This subclass/group covers:
Illustrative example of subject matter classified in this group.

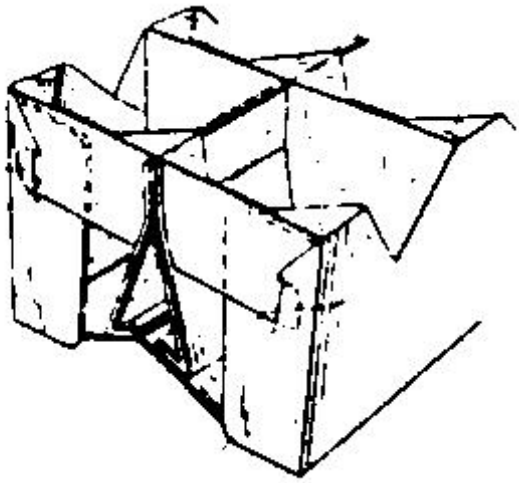

B65D 85/327

[N: Containers with compartments formed by folding and inter-connecting of two or more blanks]

Definition statement

This subclass/group covers:
Illustrative example of subject matter classified in this group.

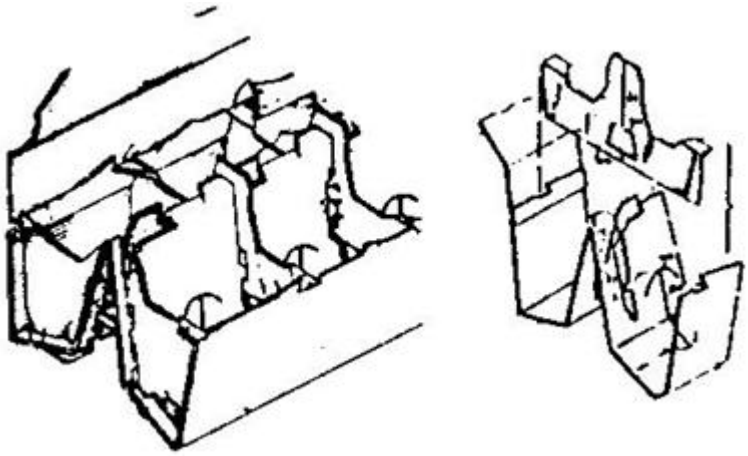

B65D 85/328

[N: Partitions]

Definition statement

This subclass/group covers:
Illustrative example of subject matter classified in this group.

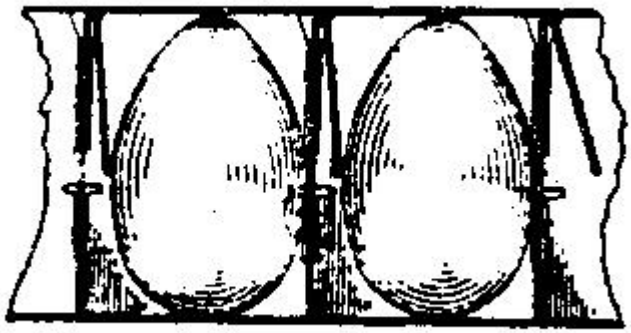

Informative references

Attention is drawn to the following places, which may be of interest for search:

Squaring or like elements, e.g.	B65D 5/48026

honeycomb element, i.e. at least four not aligned compartments	

B65D 85/34

for fruit, e.g. apples, oranges, tomatoes

Definition statement

This subclass/group covers:

Illustrative example of subject matter classified in this group.

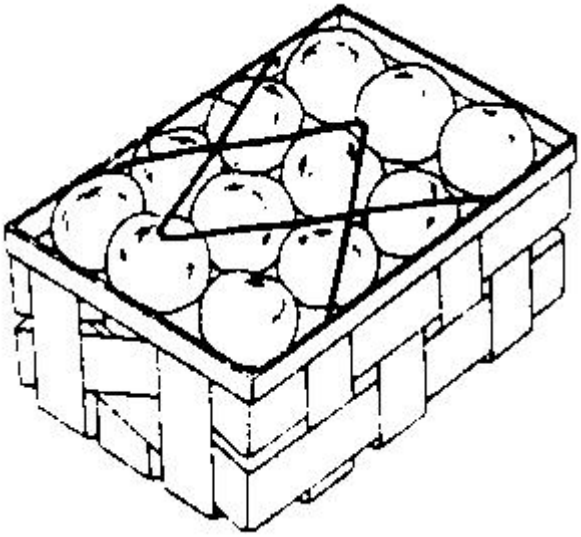

References relevant to classification in this group

This subclass/group does not cover:

Separating trays for fruit containers	B65D 65/44

B65D 85/345

[N: having a meshed or apertured closure to allow contents to breathe]

Definition statement

This subclass/group covers:

Illustrative example of subject matter classified in this group.

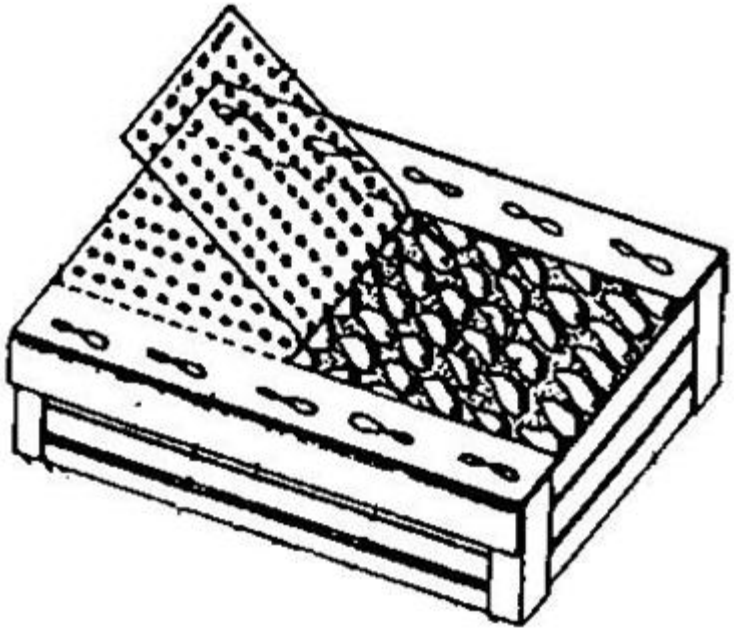

B65D 85/36

for biscuits or other bakery products

References relevant to classification in this group

This subclass/group does not cover:

Protective covers or lids for food containers	A47G 19/26
Holders or wrappers as eating aids for fast food, e.g. hamburgers	A47G 21/001
"Clamshell" container made by folding cardboard	B65D 5/667

Special rules of classification within this group

The use of available Indexing Codes is mandatory.

B65D 85/38

for optical or other delicate measuring, calculating, or control apparatus

References relevant to classification in this group

This subclass/group does not cover:

Contact lenses cases	A45C 11/005
Casings specifically for measuring instruments	G01K

B65D 85/42

for ampoules; for lamp bulbs; for electronic valves or tubes

References relevant to classification in this group

This subclass/group does not cover:

Sleeves	B65D 59/04
Containers or magazines for electric components, e.g. tube like magazines	H05K 13/0084

B65D 85/46

for bricks, tiles, or building blocks

References relevant to classification in this group

This subclass/group does not cover:

Palletisable loads	B65D 71/0088
Bundling bricks or other building blocks	B65B 27/02

Informative references

Attention is drawn to the following places, which may be of interest for search:

For stacks of articles; for special arrangements of groups of articles	B65D 85/62

B65D 85/48

for glass sheets

References relevant to classification in this group

This subclass/group does not cover:
Separators B65D 57/00 and code B65D 85/48

Informative references

Attention is drawn to the following places, which may be of interest for search:

Easels, stands or shelves, e.g. castor-shelves, supporting means on vehicles	B65G 49/062
Means for avoiding damage to stacked plate glass, e.g. by interposing paper or powder spacers in the stack	B65G 49/069

B65D 85/50

for living organisms, articles, or materials sensitive to changes of environment or atmospheric conditions, e.g. land animals, birds, fish, water plants, non-aquatic plants, flower bulbs, cut flowers, foliage (devices for transporting live fish A01K 63/02)

Definition statement

This subclass/group covers:
Illustrative example of subject matter classified in this group.

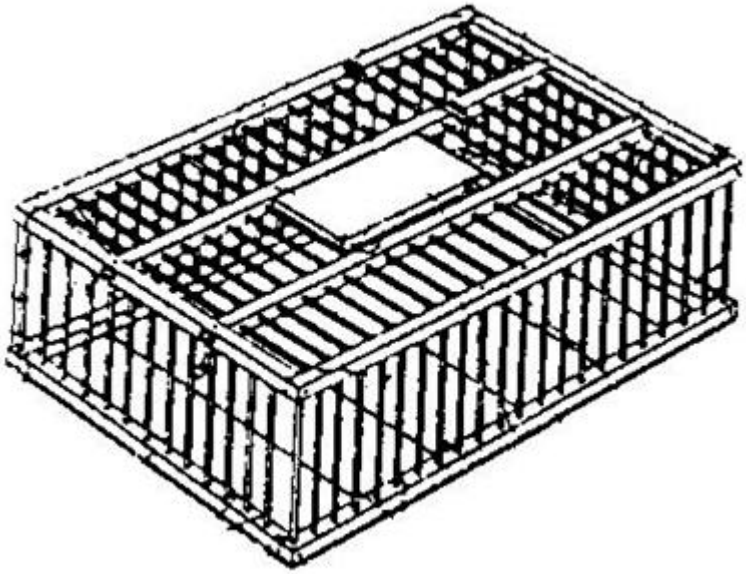

References relevant to classification in this group

This subclass/group does not cover:

Devices for transporting live animals	A01K 1/0236
Packaging agricultural or horticultural products	B65B 25/02
Containers characterised by apertures to ventilate the contents	B65D 81/263, B65D 85/50

B65D 85/505

[N: for cut flowers]

Definition statement

This subclass/group covers:

Illustrative example of subject matter classified in this group.

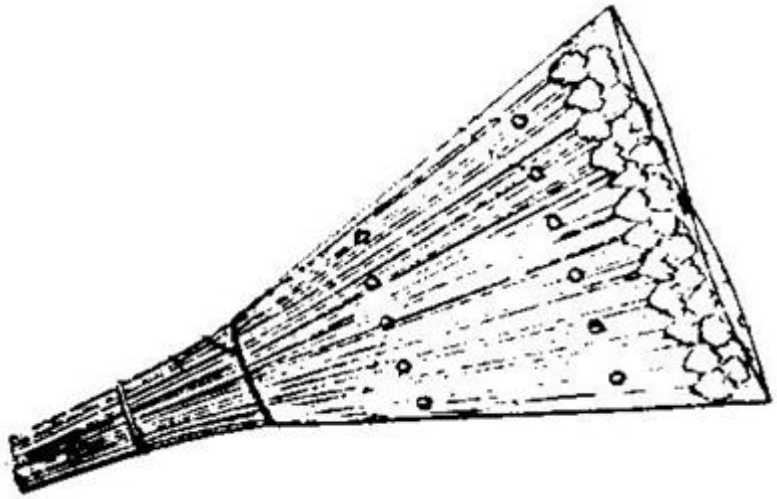

References relevant to classification in this group

This subclass/group does not cover:

Floral handling	A01G 5/00
Foldable flower pots	A01G 9/026
Foldable vases	A47G 7/063
Packaging agricultural or horticultural products	B65B 25/02
Boxes for cut flowers	B65D 5/5021, B65D 5/5035, A01G 5/02
Floral art pieces	B65D 85/52

B65D 85/52

for living plants; for growing bulbs

Definition statement

This subclass/group covers:

Illustrative example of subject matter classified in this group.

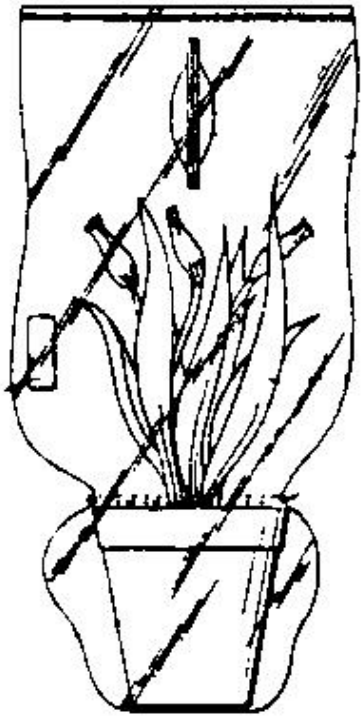

References relevant to classification in this group

This subclass/group does not cover:

Seeds which grow in the package	A01G
Pots for growing plants	A01G 9/02
Christmas trees	A47G 33/04
Underlays, mats for catching needles or to aid in disposing of Christmas trees	A47G 33/045
Covers for flower-pots, e.g. ornamental pots	A47G 7/08
Made of flexible sheets of non-resilient material	A47G 7/085
Packaging agricultural or horticultural products	B65B 25/02
Cartons for potted plants	B65D 5/5035

B65D 85/542

[N: for tetrahedral packages]

Definition statement

This subclass/group covers:
Illustrative example of subject matter classified in this group.

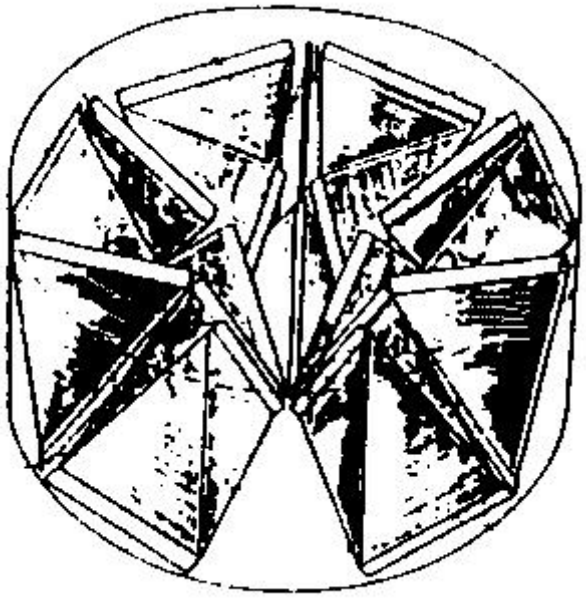

B65D 85/544

[N: for gramophone records]

References relevant to classification in this group

This subclass/group does not cover:

Tape cassettes or CD-packs	G11B

B65D 85/546

[N: formed by folding a single blank]

Definition statement

This subclass/group covers:
Illustrative example of subject matter classified in this group.

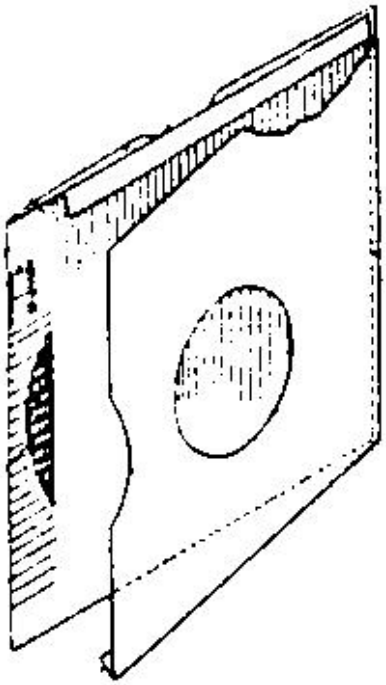

B65D 85/548

[N: formed by folding or interconnecting of two or more blanks]

Definition statement

This subclass/group covers:

Illustrative example of subject matter classified in this group.

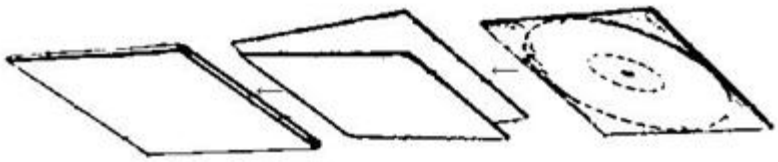

B65D 85/58

for ball bearings, washers, buttons, or like spherical or disc-shaped articles (cards for buttons, collar-studs, sleeve-links A44B 7/00)

References relevant to classification in this group

This subclass/group does not cover:

Coin wrappers	G07D 9/006

B65D 85/62

for stacks of articles; for special arrangements of groups of articles

References relevant to classification in this group

This subclass/group does not cover:

Palletisable loads	B65D 71/0088
Bricks, tiles, or building blocks	B65D 85/46
Coin wrappers	G07D 9/006

B65D 85/64

for bulky articles

Special rules of classification within this group

The use of available Indexing Codes is mandatory.

B65D 85/66

for jumbo rolls; for rolls of floor covering

Definition statement

This subclass/group covers:
Illustrative example of subject matter classified in this group.

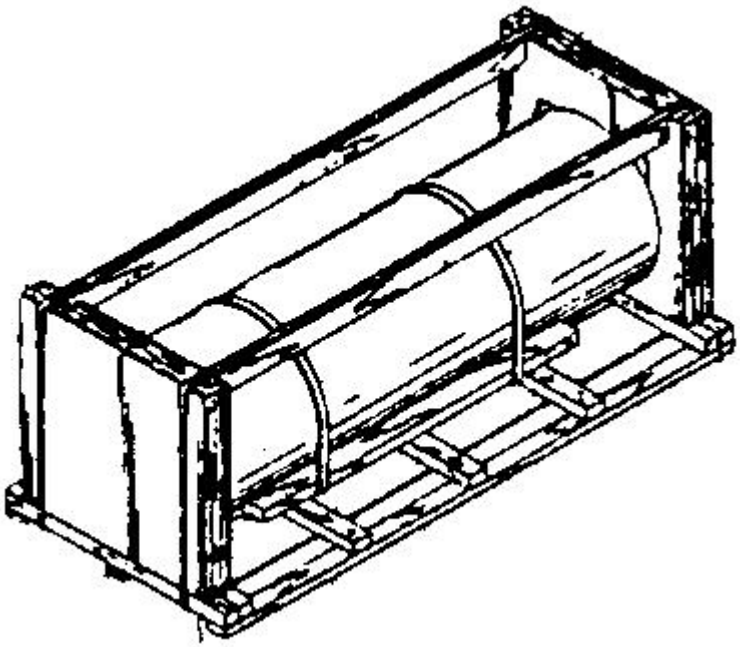

B65D 85/67

for other web or tape-like material [N: (with means for dispensing B65D 83/08)]

References relevant to classification in this group

This subclass/group does not cover:

Fibre materials	B65H
Photo-sensitive paper	G03C 3/00

Informative references

Attention is drawn to the following places, which may be of interest for search:

Containers or packages with special means for dispensing contents, the band being wound in flat spiral, folded in accordion or the like	B65D 83/0472

B65D 85/671

wound in flat spiral form

Definition statement

This subclass/group covers:

Illustrative example of subject matter classified in this group.

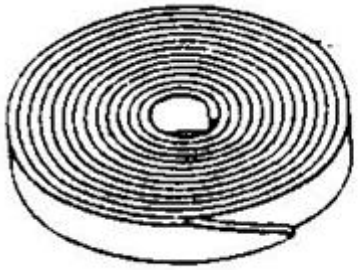

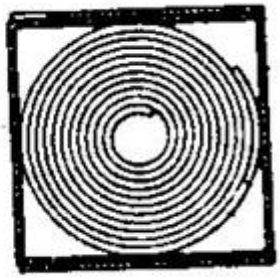

References relevant to classification in this group

This subclass/group does not cover:

Dispensers provided with knives or cutting means	B65D 83/0841, B65D 83/0882

B65D 85/672

on cores

Definition statement

This subclass/group covers:

Illustrative example of subject matter classified in this group.

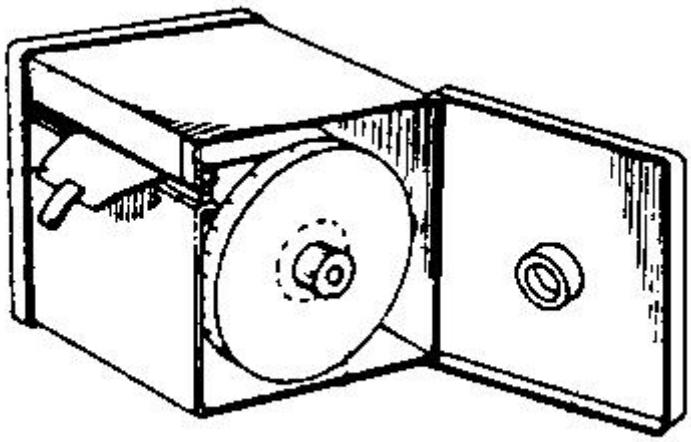

References relevant to classification in this group

This subclass/group does not cover:

Dispensers provided with knives or cutting means	B65D 83/0841, B65D 83/0882
Cores, supports, or holders for coiled, wound, or folded material, e.g. reels, spindles, bobbins, cop tubes	B65H 75/02
Photo-sensitive paper	G03C 3/00

B65D 85/675

wound in helical form

Definition statement

This subclass/group covers:

Illustrative example of subject matter classified in this group.

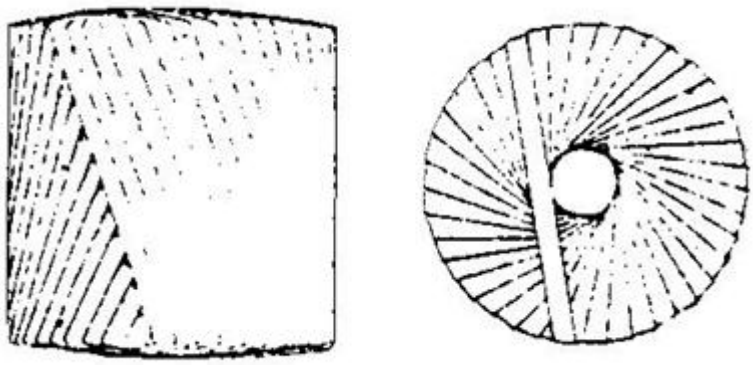

Informative references

Attention is drawn to the following places, which may be of interest for search:

For coils of wire, rope, or hose	B65D 85/04
On cores	B65D 85/676
Storing webs, tapes, or filamentary material, e.g. on reels	B65H 75/00

B65D 85/676

on cores

Definition statement

This subclass/group covers:
Illustrative example of subject matter classified in this group.

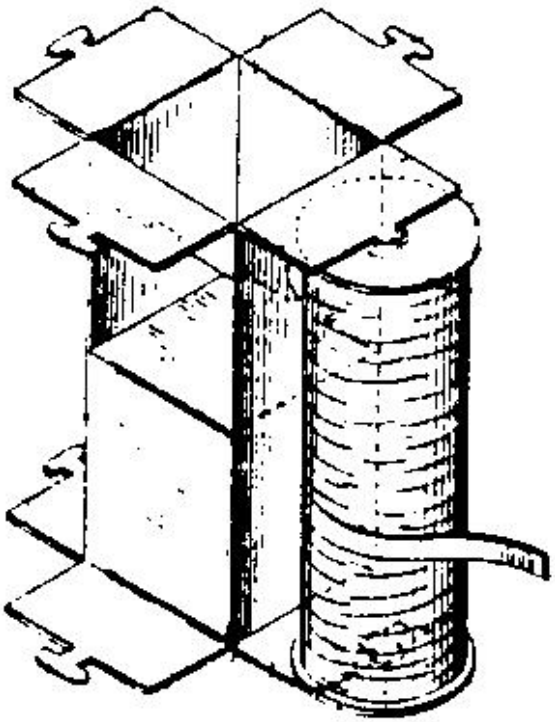

References relevant to classification in this group

This subclass/group does not cover:

Cores, supports, or holders for coiled, wound, or folded material, e.g. reels, spindles, bobbins, cop tubes	B65H 75/02

Informative references

Attention is drawn to the following places, which may be of interest for search:

For coils of wire, rope, or hose	B65D 85/04
On cores	B65D 85/676
Storing webs, tapes, or filamentary	B65H 75/00

material, e.g. on reels	

B65D 85/677

on flat cards

Definition statement

This subclass/group covers:
Illustrative example of subject matter classified in this group.

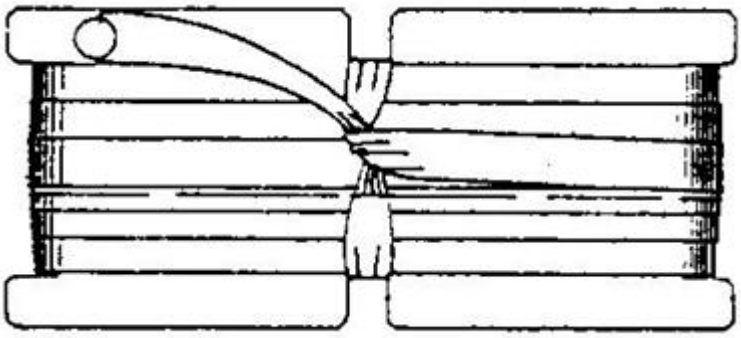

Informative references

Attention is drawn to the following places, which may be of interest for search:

For coils of wire, rope, or hose	B65D 85/04
Storing webs, tapes, or filamentary material, e.g. on reels	B65H 75/00

B65D 85/68

for machines, engines, or vehicles in assembled or dismantled form

References relevant to classification in this group

This subclass/group does not cover:

Parking covers for cycles	B62J 19/00
Tyres, wheels or rims	B65D 85/06

Protective arrangements for use during transport of washing machines	D06F 39/001

Special rules of classification within this group

The use of available Indexing Codes is mandatory.

B65D 85/73

with means specially adapted for effervescing the liquids, e.g. for forming bubbles or beer head

Definition statement

This subclass/group covers:

Illustrative example of subject matter classified in this group.

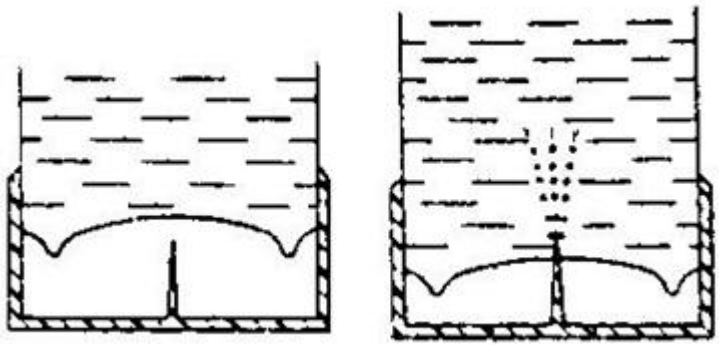

References relevant to classification in this group

This subclass/group does not cover:

Pressure regulators for aerosols	B62J 19/00

B65D 85/78

for ice-cream

References relevant to classification in this group

This subclass/group does not cover:

Carriers for several cones	A47G 23/06

B65D 85/804

Disposable containers or packages with contents which are [N: mixed,] infused or dissolved in situ [N: i.e. without having been previously removed from the package (B65D 65/46 takes precedence; tea infusers A47G 19/16; spoons or stirrers comprising beverage additives A47G21/04D)]

References relevant to classification in this group

This subclass/group does not cover:

Packaging of substances, e.g. tea, which are intended to be infused in the package	B65B 29/02
Applications of disintegrable, dissolvable or edible materials	B65D 65/46
Porous packages	B65D 85/808

B65D 85/8043

[N: Packages adapted to allow liquid to pass through the contents (B65D 85/808 takes precedence; coffee filters not used as packages A47J 31/00)]

Definition statement

This subclass/group covers:

Illustrative example of subject matter classified in this group.

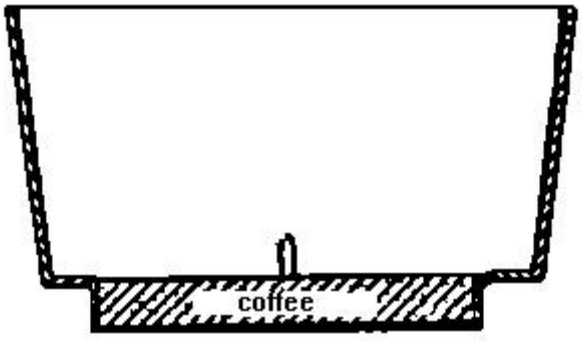

References relevant to classification in this group

This subclass/group does not cover:

Apparatus for brewing coffee, specially adapted for cartridges	A47J 31/0668
Disposable containers or packages with contents which are for immersion in the liquid	B65D 85/808

B65D 85/8046

[N: Pods, i.e. closed containers made only of filter paper or similar material]

Definition statement

This subclass/group covers:

Illustrative example of subject matter classified in this group.

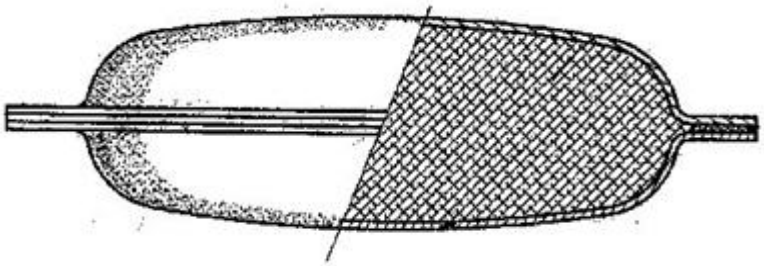

B65D 85/808

for immersion in the liquid [N: to release part or all of their contents], e.g. tea bags

Definition statement

This subclass/group covers:

Illustrative example of subject matter classified in this group.

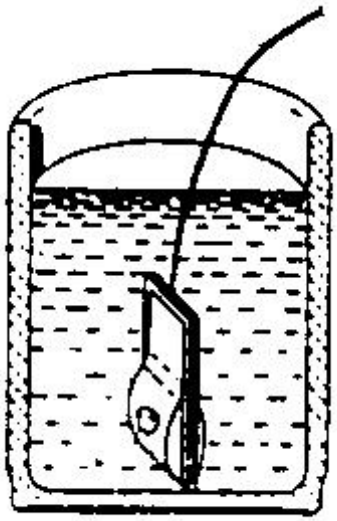

References relevant to classification in this group

This subclass/group does not cover:

Attaching string handles or tags to tea bags	B65B 29/04
Dissolvable packages	B65D 65/46

B65D 85/8085

[N: characterised by an outer package, e.g. wrappers or boxes for enclosing tea-bags]

Definition statement

This subclass/group covers:

Illustrative example of subject matter classified in this group.

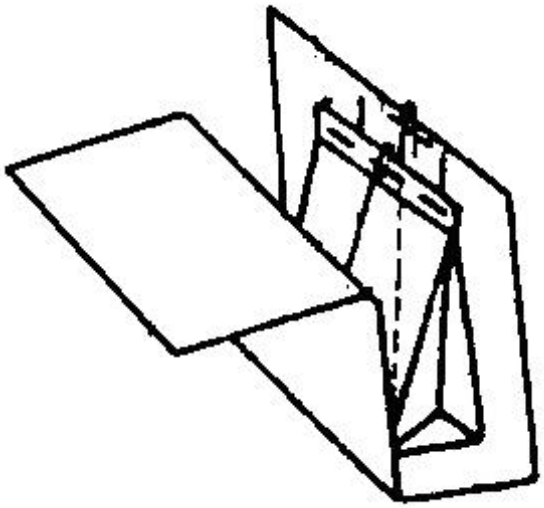

B65D 85/812

with features facilitating their [N: manipulation or] suspension [N: (B65D 85/8085 takes precedence)]

Definition statement

This subclass/group covers:

Illustrative example of subject matter classified in this group.

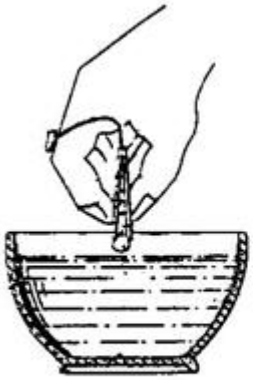

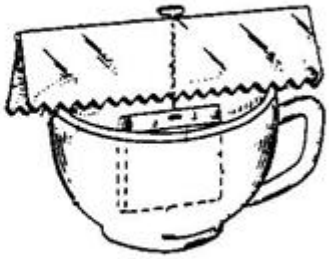

References relevant to classification in this group

This subclass/group does not cover:

Disposable containers or packages with contents which are infused or dissolved in situ, characterised by an outer package	B65D 85/8085

B65D 85/816

into which liquid is added [N: and the resulting preparation is retained], e.g. cups preloaded with powder or dehydrated food

Definition statement

This subclass/group covers:

Illustrative example of subject matter classified in this group.

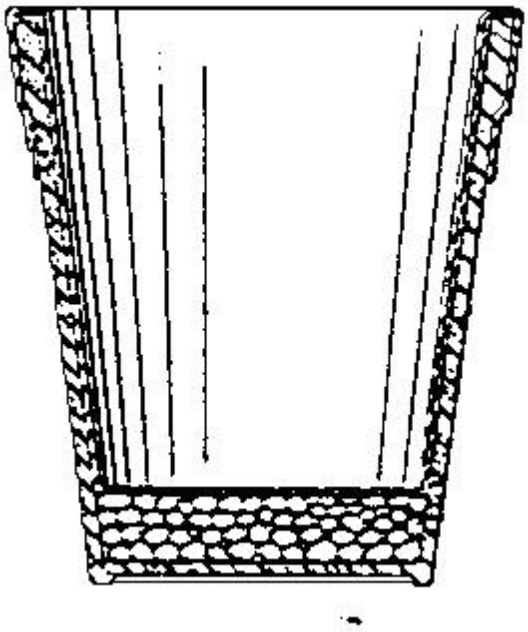

B65D 88/00

Large containers (component parts, details or accessories B65D 90/00; construction or assembling of bulk storage containers employing civil engineering techniques in situ or off the site E04H 7/00; gas holders of variable capacity F17B; vessels for containing or storing compressed, liquefied or solidified gases F17C)

Informative references

Attention is drawn to the following places, which may be of interest for search:

Large containers (FTCLA)	3E070

B65D 88/005

[N: of variable capacity, e.g. with movable or adjustable walls or wall parts, modular]

Definition statement

This subclass/group covers:

Illustrative example of subject matter classified in this group:

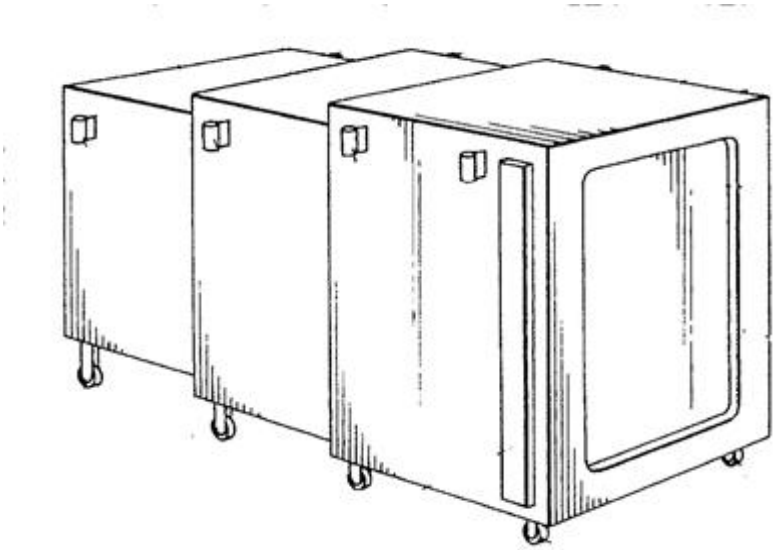

References relevant to classification in this group

This subclass/group does not cover:

Small containers	B65D 21/02
Flexible container	B65D 88/16
Collapsible container	B65D 88/52

Informative references

Attention is drawn to the following places, which may be of interest for search:

By connecting two or more similar container each other to obtain a larger container	B65D 88/022
Wall construction: modular panels	B65D 90/023

Height adjusting implements and spacers (FTCLA)	3E070/WJ05

B65D 88/02

rigid (B65D 88/34 to B65D 88/78 take precedence; hoppers B65D 88/26; [N: special vessels for collecting or storing rain-water for use in the household E03B 3/03; cesspools E03F 11/00])

References relevant to classification in this group

This subclass/group does not cover:

Large containers having floating covers; collapsible; characterised by means facilitating filling emptying; having means for heating, cooling, aerating or other conditioning of contents; for use underground; for use in or under water	B65D 88/34 - B65D 88/78
Hoppers	B65D 88/26

B65D 88/022

[N: in multiple arrangement, e.g. stackable, nestable, connected or joined together side-by-side]

Definition statement

This subclass/group covers:

Illustrative example of subject matter classified in this group:

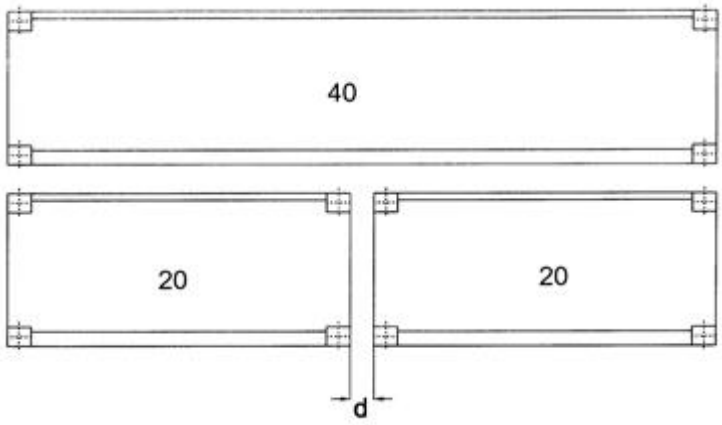

References relevant to classification in this group

This subclass/group does not cover:

Hoppers	B65D 88/32
Stacking on ships	B63B 25/28

Special rules of classification within this group

For FIBC see Indexing Code B65D 2588/167.

B65D 88/025

[N: Nestable containers or nestable container parts forming a receptacle when one part is inverted upon the other]

Definition statement

This subclass/group covers:

Illustrative examples of subject matter classified in this group:

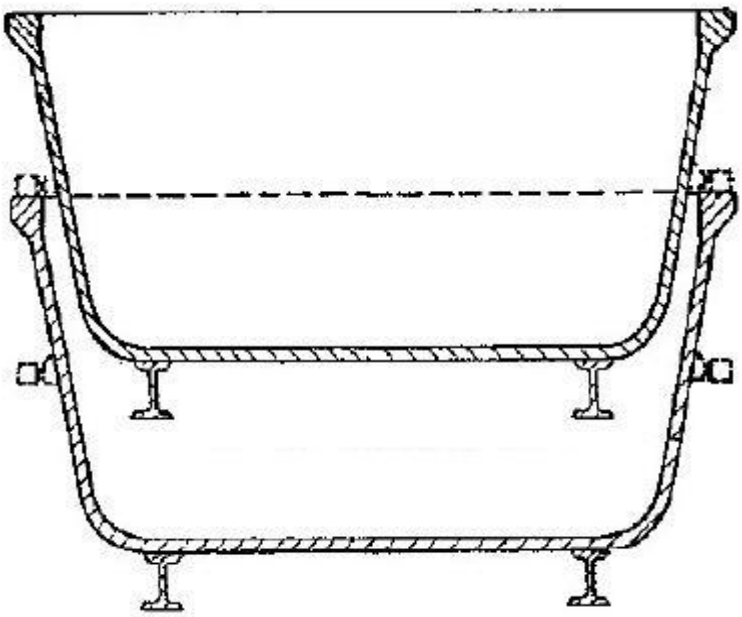

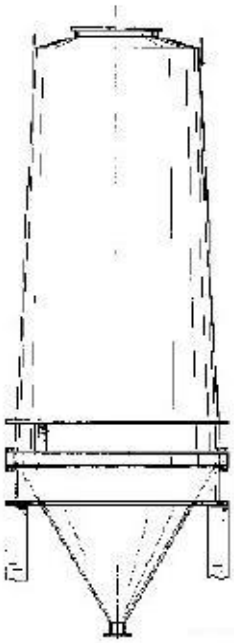

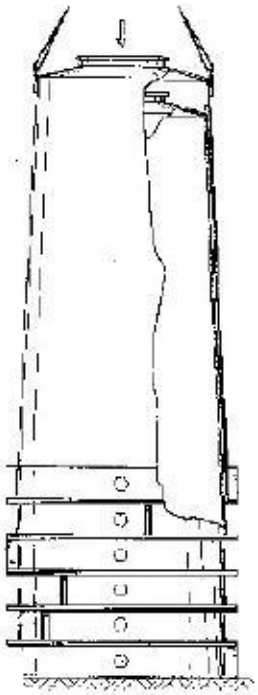

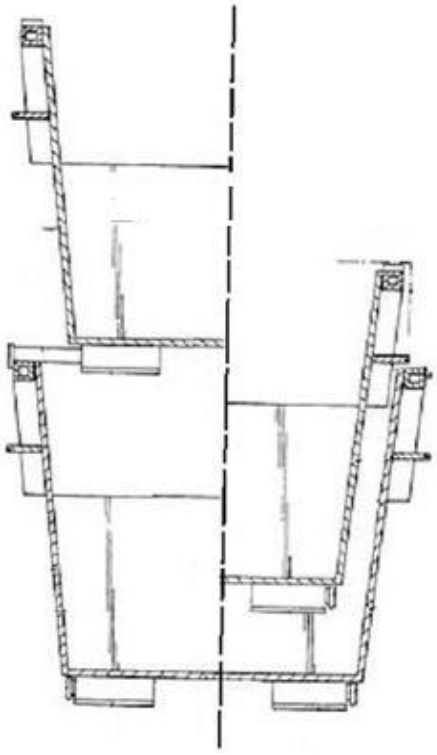

References relevant to classification in this group

This subclass/group does not cover:

Nestable and stackable container	B65D 88/022, B65D 88/025

Informative references

Attention is drawn to the following places, which may be of interest for search:

All side walls detached from each other to collapse the container	B65D 88/528
Modular panels	B65D 90/023

B65D 88/027

[N: single containers connected to each other by additional means so as to form a cluster of containers, e.g. a battery of containers (B65D 88/005 takes precedence)]

Definition statement

This subclass/group covers:

Illustrative example of subject matter classified in this group:

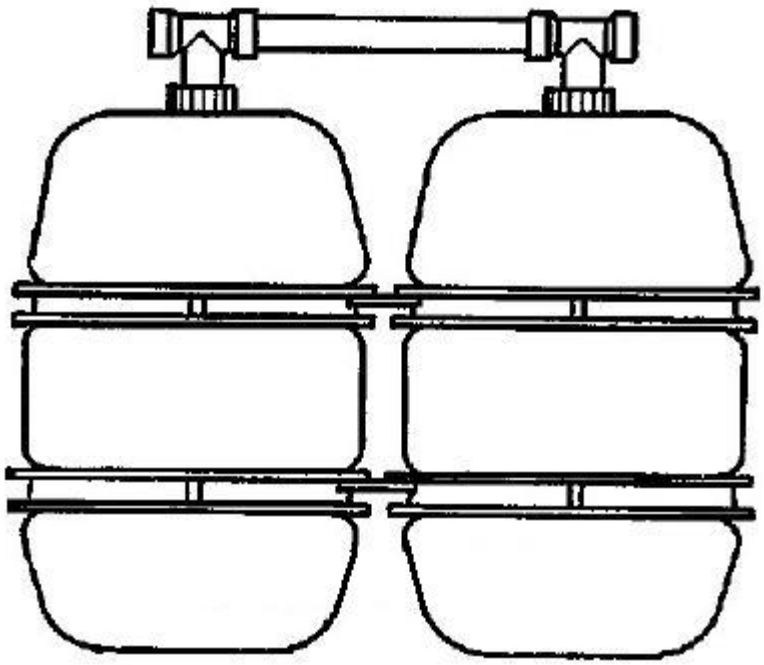

References relevant to classification in this group

This subclass/group does not cover:

Large containers of variable capacity	B65D 88/005
Hoppers	B65D 88/32

B65D 88/04

spherical (B65D 88/12 takes precedence)

Definition statement

This subclass/group covers:
Illustrative example of subject matter classified in this group:

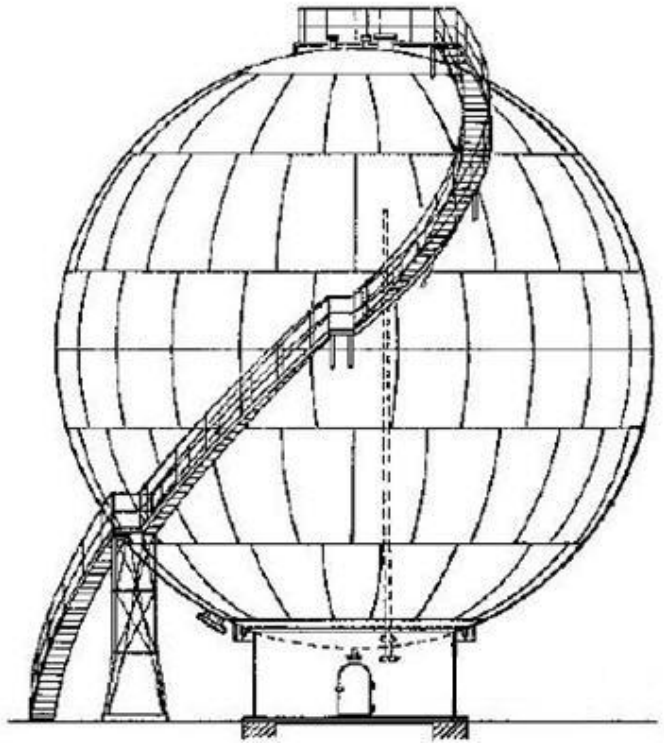

References relevant to classification in this group

This subclass/group does not cover:

Specially adapted for transport (associated with vehicles)	B65D 88/12

Informative references

Attention is drawn to the following places, which may be of interest for search:

Modular panels with features of spheroidal curvature	B65D 90/025

B65D 88/06

cylindrical (B65D 88/12 takes precedence)

Definition statement

This subclass/group covers:

Illustrative example of subject matter classified in this group:

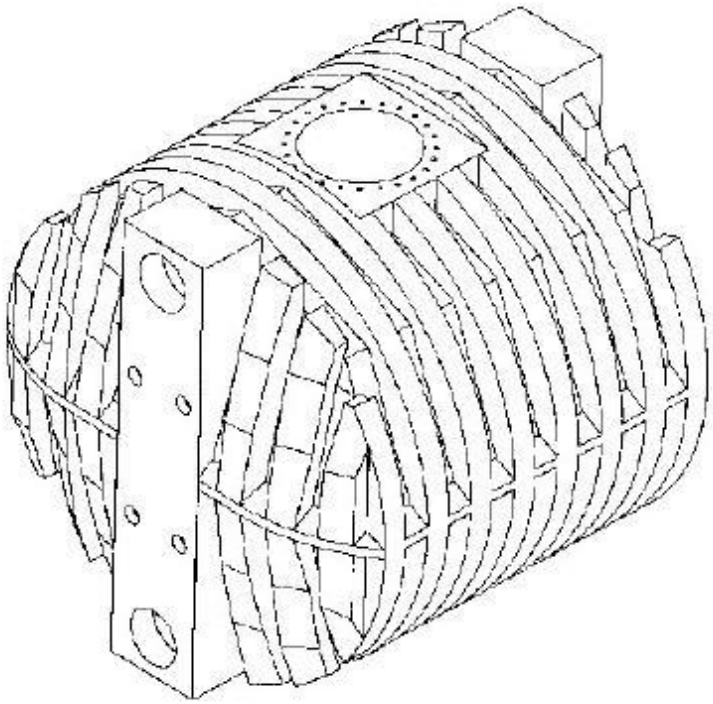

References relevant to classification in this group

This subclass/group does not cover:

Specially adapted for transport	B65D 88/12

Informative references

Attention is drawn to the following places, which may be of interest for search:

Modular panels with features of cylindrical curvature	B65D 90/024
Construction or assembling of bulk storage containers employing civil engineering techniques in situ or off the site	E04H 7/00

B65D 88/08

with a vertical axis

Definition statement

This subclass/group covers:
Illustrative example of subject matter classified in this group.

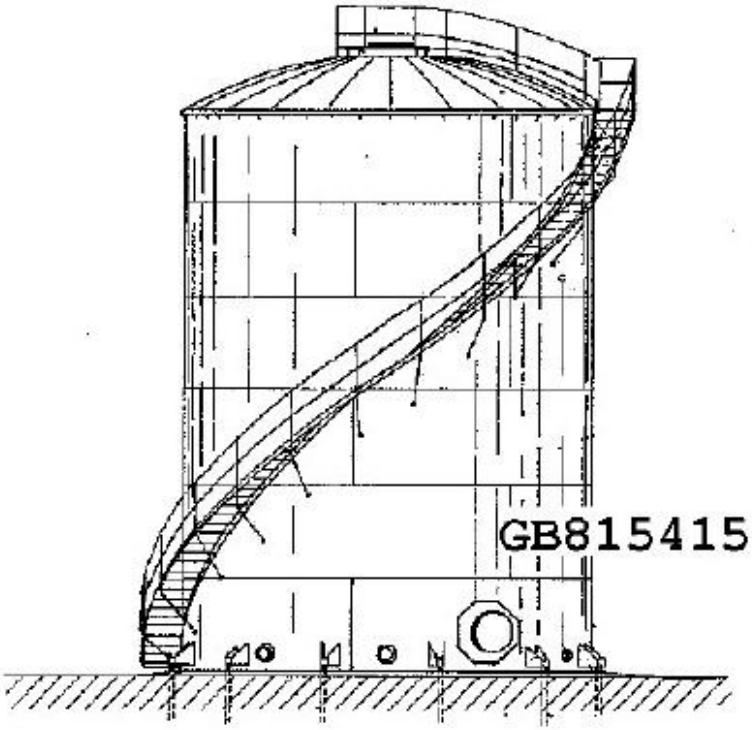

References relevant to classification in this group

This subclass/group does not cover:

Mainly metal container with vertical axis	E04H 7/06
Roof constructions	E04H 7/065

Informative references

Attention is drawn to the following places, which may be of interest for search:

Modular panels with cylindrical curvature	B65D 90/024

B65D 88/10

parallelepipedic (B65D 88/12 takes precedence)

Definition statement

This subclass/group covers:
Illustrative example of subject matter classified in this group:

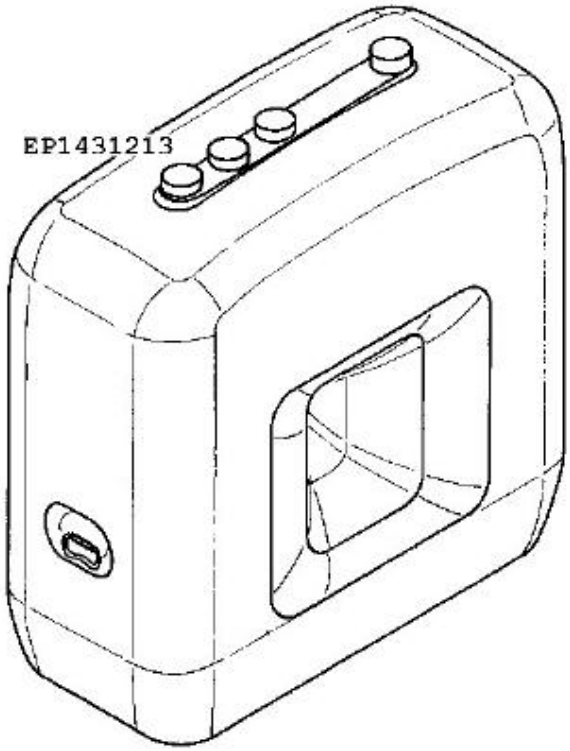

References relevant to classification in this group

This subclass/group does not cover:

Specially adapted for transport	B65D 88/12

Informative references

Attention is drawn to the following places, which may be of interest for search:

Modular panels	B65D 90/023

B65D 88/12

specially adapted for transport (associated with vehicles, see the relevant subclasses of B60 to B64)

References relevant to classification in this group

This subclass/group does not cover:

Application as house or office	E04B 1/34336

Special rules of classification within this group

The use of available Indexing Codes is mandatory.

B65D 88/121

[N: ISO containers]

Definition statement

This subclass/group covers:
Illustrative example of subject matter classified in this group:



References relevant to classification in this group

This subclass/group does not cover:

Corner fittings	B65D 90/0026
Doors therefore	B65D 90/008
ISO container used as house, hospital, office, etc.	E04B 1/34336

Informative references

Attention is drawn to the following places, which may be of interest for search:

ISO type containers (FTCLA)	3E070/AA26

B65D 88/122

[N: with access from above]

References relevant to classification in this group

This subclass/group does not cover:

Transporter frames for containers	B65D 88/129
Partial openings on manholes	B65D 90/10

B65D 88/123

[N: open top]

Definition statement

This subclass/group covers:
Illustrative example of subject matter classified in this group:



Informative references

Attention is drawn to the following places, which may be of interest for search:

In multiple arrangement	B65D 88/022
Transporter frames for containers	B65D 88/129

B65D 88/124

[N: closable top]

Informative references

Attention is drawn to the following places, which may be of interest for search:

Non-fixed roofs; Roofs with movable panels	B60J 7/00

B65D 88/125

[N: by flexible element, e.g. canvas]

Definition statement

This subclass/group covers:
Illustrative example of subject matter classified in this group.



References relevant to classification in this group

This subclass/group does not cover:

Flexible closure for side walls	B65D 90/021

Informative references

Attention is drawn to the following places, which may be of interest for search:

Coverings, e.g. for insulating purposes	B65D 90/06

B65D 88/126

[N: by rigid element, e.g. lid]

Definition statement

This subclass/group covers:
Illustrative example of subject matter classified in this group:

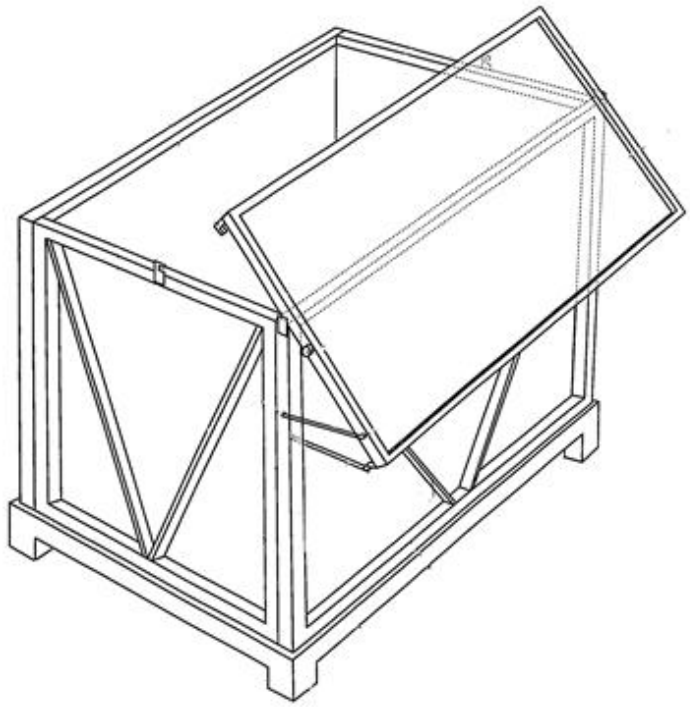

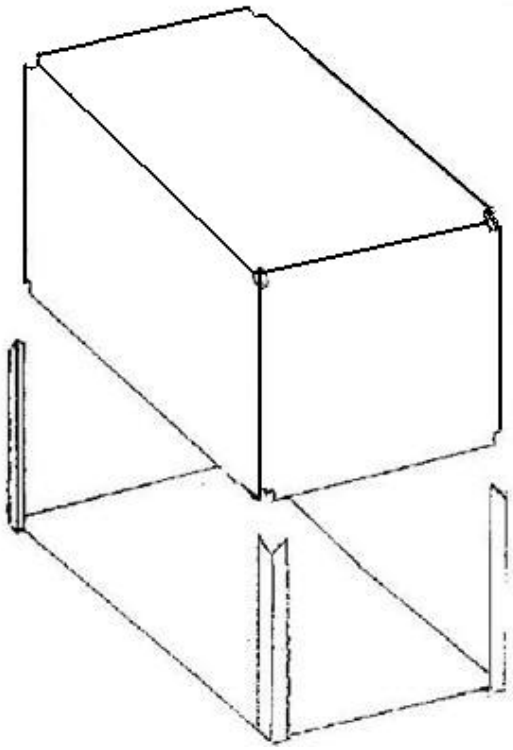

References relevant to classification in this group

This subclass/group does not cover:

Manholes; Inspection openings; Covers therefor	B65D 90/10
Non fixed roof for vehicles	B60J 7/00

B65D 88/127

[N: open-sided container, i.e. having substantially the whole side free to provide access, with or without closures (B65D 88/129, B65D 90/008 take precedence)]

Definition statement

This subclass/group covers:

Illustrative example of subject matter classified in this group.



References relevant to classification in this group

This subclass/group does not cover:

Doors / tarpaulin on the side of the vehicles	B60J 5/04
Some similar construction of the container	B65D 88/129
Doors for containers	B65D 90/008
Flexible closure	B65D 90/021

Informative references

Attention is drawn to the following places, which may be of interest for search:

By displacement of walls	B65D 88/58

B65D 88/128

[N: tank containers, i.e. containers provided with supporting devices for handling]

Definition statement

This subclass/group covers:

Illustrative example of subject matter classified in this group:



References relevant to classification in this group

This subclass/group does not cover:

Tank vehicles, accessories and construction details thereof	B60P 3/22

B65D 88/129

[N: Transporter frames for containers]

Definition statement

This subclass/group covers:

Illustrative examples of subject matter classified in this group:



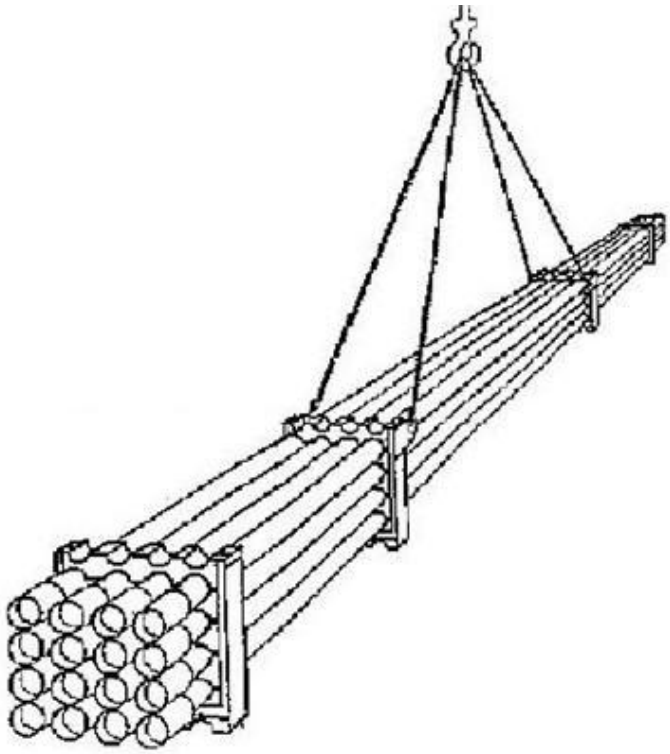

References relevant to classification in this group

This subclass/group does not cover:

Pallets, generally of smaller size	B65D 19/00
Open top container	B65D 88/123
Separate frames for pipes	B65D 85/20, B65D 61/00

Informative references

Attention is drawn to the following places, which may be of interest for search:

Vehicles for transporting loads specially adapted for carrying different numbers of container or containers of different sizes	B60P 1/6481

Special rules of classification within this group

Collapsible and or dismountable must be classified also in B65D 88/52.

B65D 88/14

by air

Definition statement

This subclass/group covers:
Illustrative examples of subject matter classified in this group:

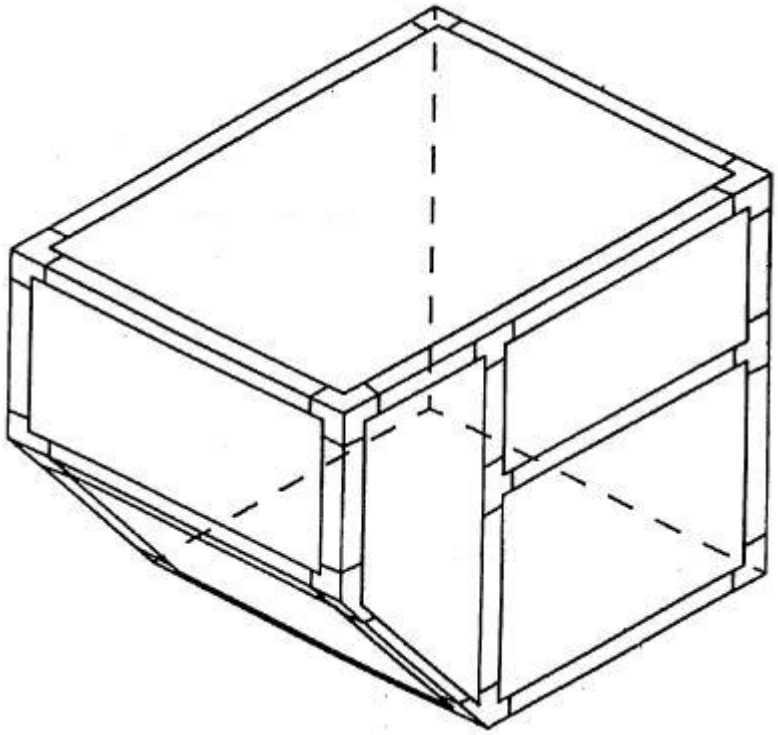

References relevant to classification in this group

This subclass/group does not cover:

For blast resistant	B65D 90/325

Informative references

Attention is drawn to the following places, which may be of interest for search:

Containers having bodies formed by interconnecting or uniting two or more rigid, or substantially rigid, components made wholly or mainly wood or substitutes therefor	B64D 9/00

B65D 88/16

flexible (B65D 88/34 to B65D 88/78 take precedence; hoppers B65D 88/26)

References relevant to classification in this group

This subclass/group does not cover:

Flexible side walls	B65D 90/021
Flexible liner or bag inside a container	B65D 90/046
Large containers having floating covers; collapsible; characterised by means facilitating filling emptying; having means for heating, cooling, aerating or other conditioning of contents; for use underground; for use in or under water	B65D 88/34 - B65D 88/78

B65D 88/1612

[N: Flexible intermediate bulk containers (FIBC)]

Definition statement

This subclass/group covers:

Illustrative examples of subject matter classified in this group:

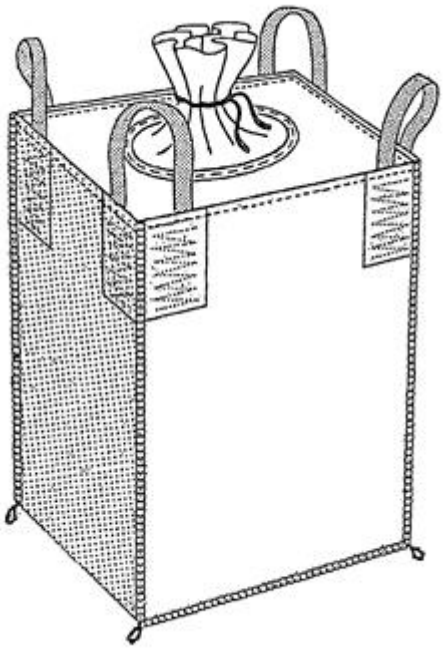

References relevant to classification in this group

This subclass/group does not cover:

Flexible containers inside a rigid container of the size of a pallet	B65D 77/06, B65D 77/061
For waste big bags	B65F
Empting device	B65B 69/0075
Holders for facilitating filling	B65B 67/12
Frame for transporting	B66C 1/226
Woven fabrics for sack- or bag-like articles	D03D 1/04
Sacks for corpses	A61G 17/06

Informative references

Attention is drawn to the following places, which may be of interest for search:

Bag container (FICLA)	B65D 88/22&A

Special rules of classification within this group

The use of available Indexing Codes is mandatory.

B65D 88/1618

[N: double-walled or with linings]

Definition statement

This subclass/group covers:
Illustrative examples of subject matter classified in this group.

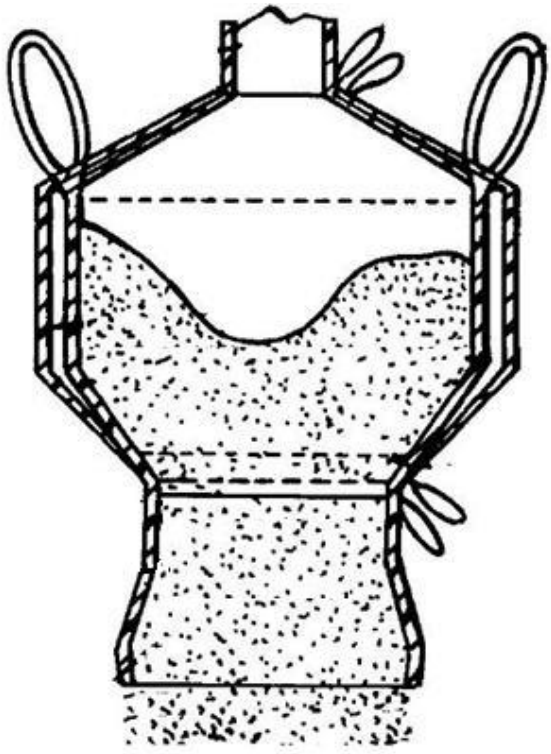

Special rules of classification within this group

The use of available Indexing Codes is mandatory.

B65D 88/1625

[N: with stiffening rigid means between the walls]

Definition statement

This subclass/group covers:

Illustrative example of subject matter classified in this group:

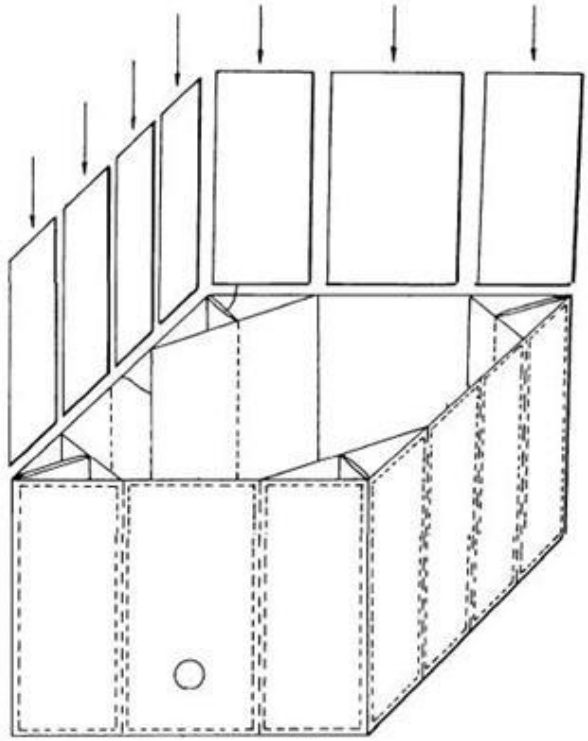

Special rules of classification within this group

The use of available Indexing Codes is mandatory.

B65D 88/1631

[N: with shape keeping flexible elements]

Definition statement

This subclass/group covers:
Illustrative example of subject matter classified in this group:

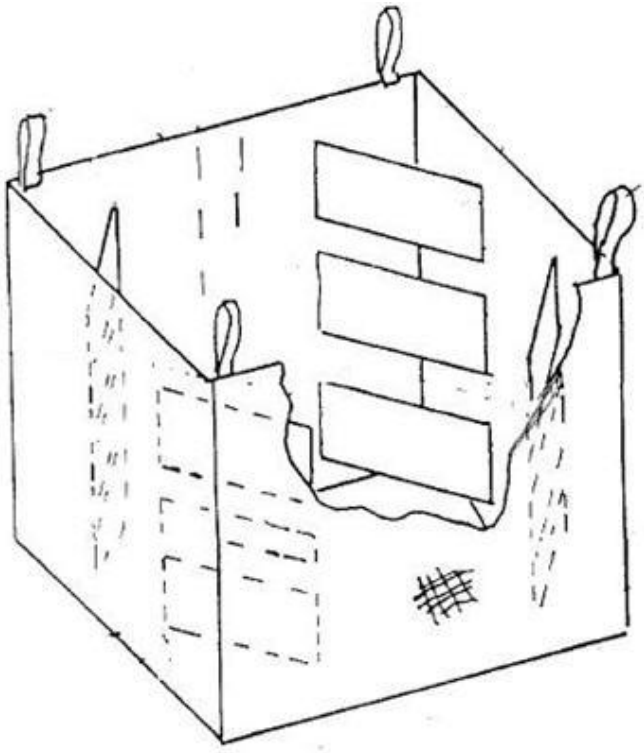

Special rules of classification within this group

The use of available Indexing Codes is mandatory.

B65D 88/1637

[N: cables or straps from top to bottom]

Definition statement

This subclass/group covers:
Illustrative examples of subject matter classified in this group:

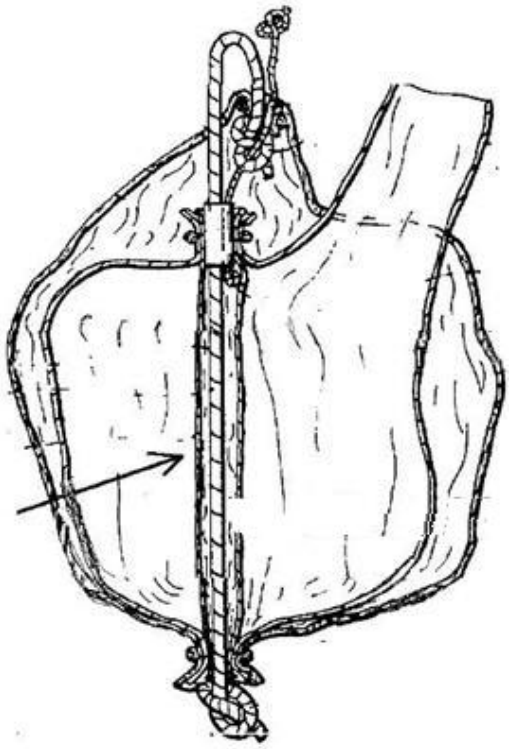

Special rules of classification within this group

The use of available Indexing Codes is mandatory.

B65D 88/1643

[N: with multiple compartments]

Definition statement

This subclass/group covers:
Illustrative example of subject matter classified in this group:

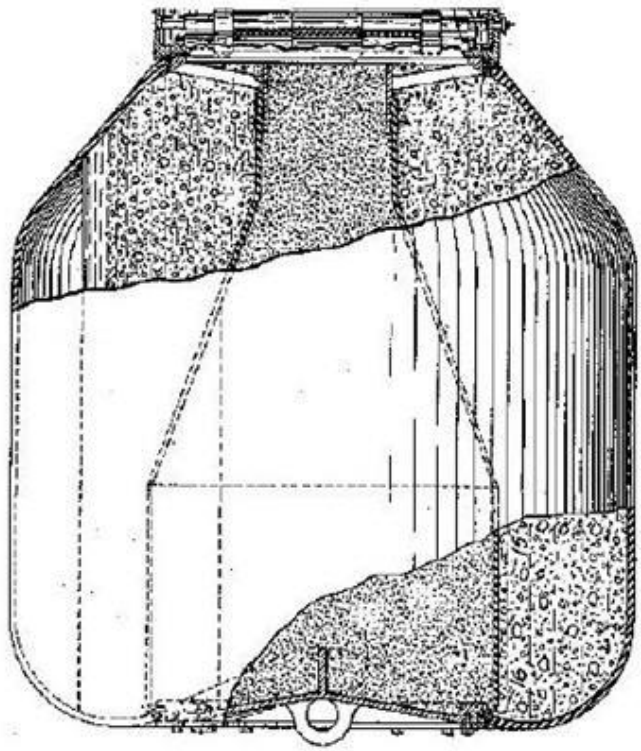

Special rules of classification within this group

The use of available Indexing Codes is mandatory.

B65D 88/165

[N: with electrically conductive properties]

Definition statement

This subclass/group covers:
Illustrative examples of subject matter classified in this group:

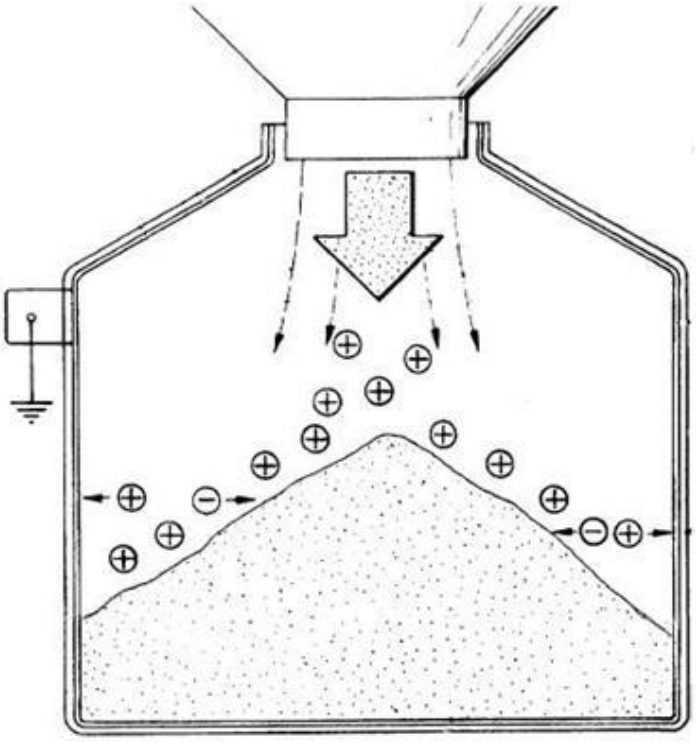

References relevant to classification in this group

This subclass/group does not cover:

Anti-static for other containers	B65D 90/46
For taps	**B67D5/32E**
Anti-static fabrics	D03D 15/0005
For small containers	B65D 2213/02

Special rules of classification within this group

The use of available Indexing Codes is mandatory.

B65D 88/1656

[N: for liquids]

Definition statement

This subclass/group covers:
Illustrative example of subject matter classified in this group:

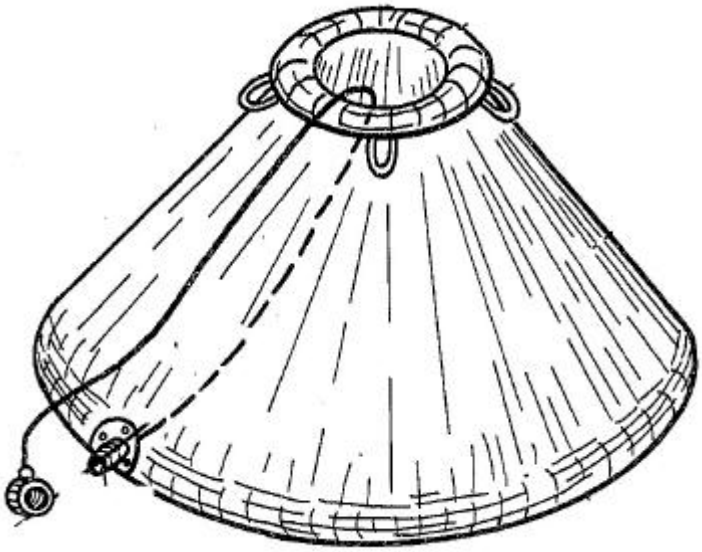

Special rules of classification within this group

The use of available Indexing Codes is mandatory.

B65D 88/1662

[N: surrounded by a net]

Definition statement

This subclass/group covers:
Illustrative example of subject matter classified in this group:

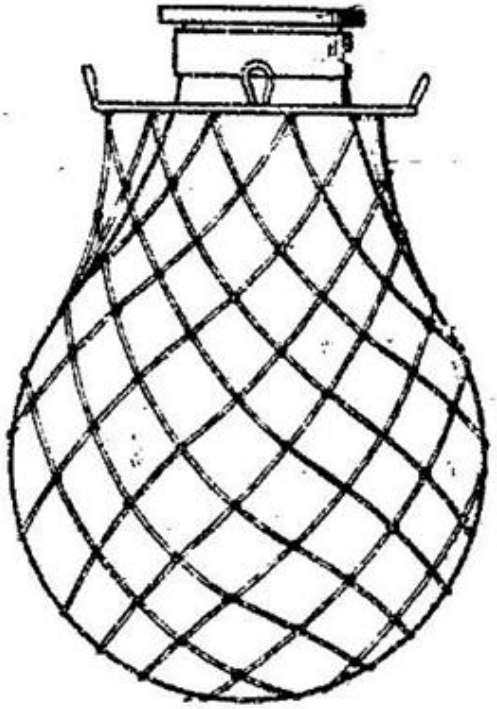

Special rules of classification within this group

The use of available Indexing Codes is mandatory.

B65D 88/1668

[N: closures for top or bottom openings]

Definition statement

This subclass/group covers:
Illustrative example of subject matter classified in this group:

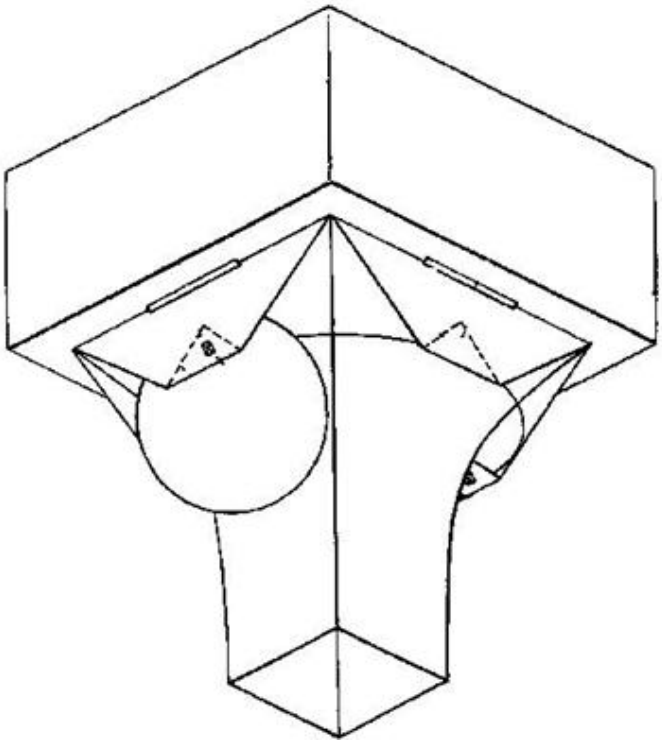

Informative references

Attention is drawn to the following places, which may be of interest for search:

Gates or closures operating by deformation of flexible walls	B65D 90/56
Input and discharge openings (FTCLA)	3E070/WK01

Special rules of classification within this group

The use of available Indexing Codes is mandatory.

B65D 88/1681

[N: Flexible, e.g. loops, or reinforcements therefor]

Definition statement

This subclass/group covers:

Illustrative example of subject matter classified in this group:

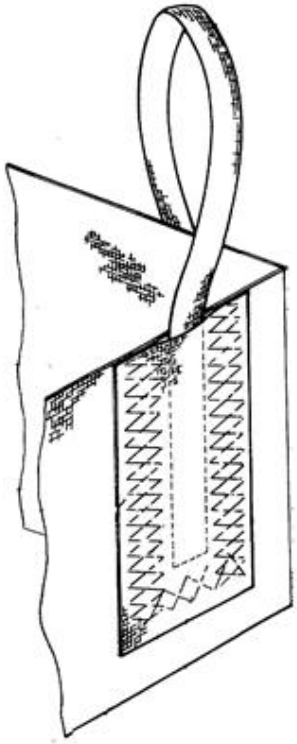

In FR2353460 the metallic ring (see red circle) connected to the flexible loop is considered a reinforcement:



Special rules of classification within this group

The use of available Indexing Codes is mandatory.

B65D 88/1687

[N: specially adapted for the forks of a forklift]

Definition statement

This subclass/group covers:

Illustrative examples of subject matter classified in this group:

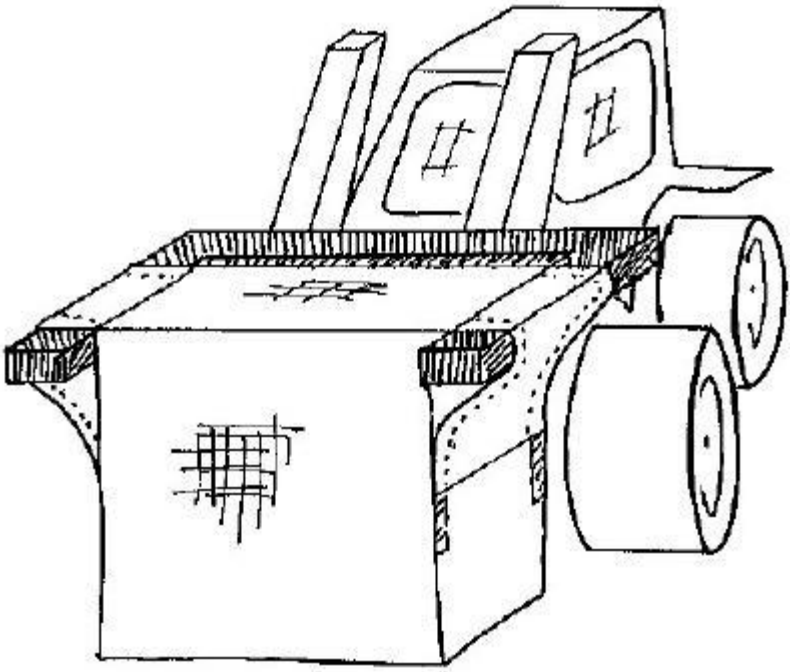

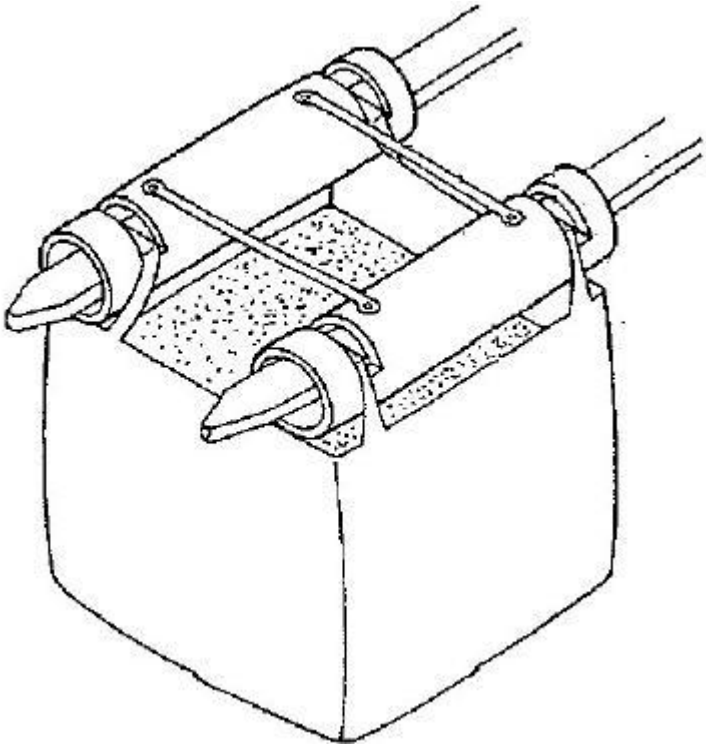

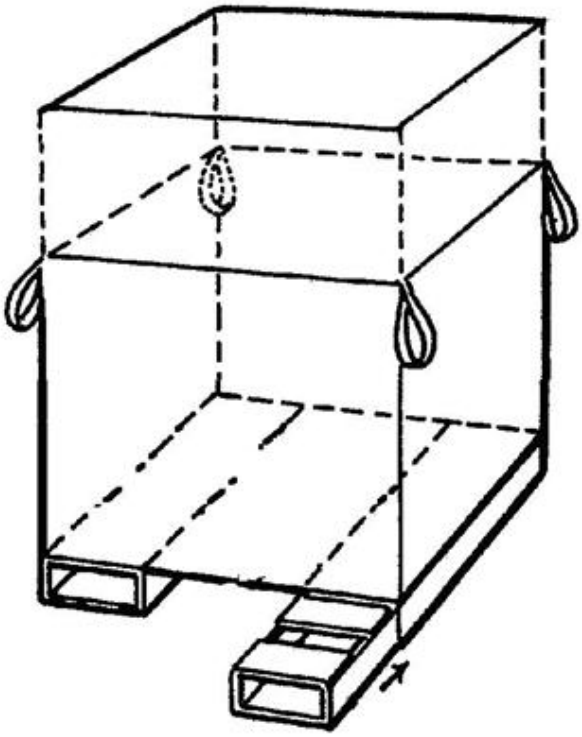

Special rules of classification within this group

The use of available Indexing Codes is mandatory.

B65D 88/1693

[N: Rigid (B65D 90/205 takes precedence)]

Definition statement

This subclass/group covers:
Illustrative examples of subject matter classified in this group:

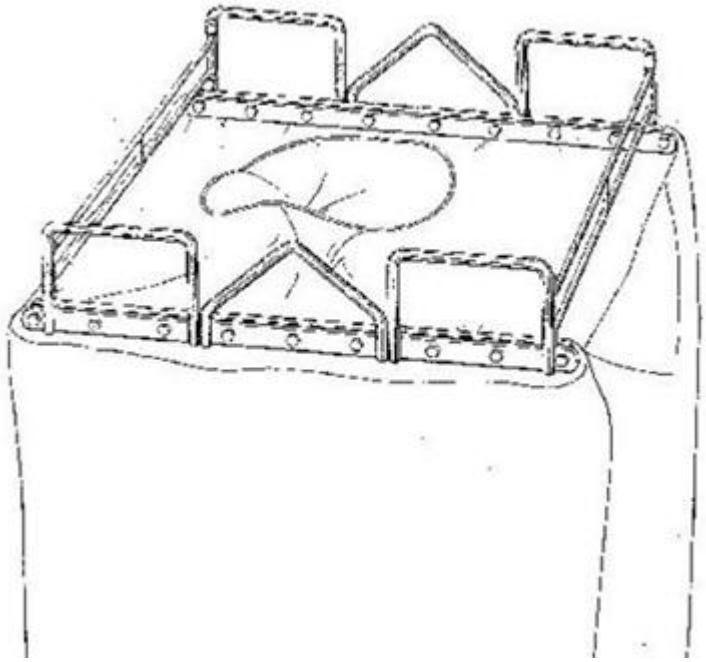

References relevant to classification in this group

This subclass/group does not cover:

Lifting fittings specially adapted for the forks of a forklift	B65D 88/1687
With rigid end-walls	B65D 88/20
Frames or nets	B65D 90/205

Special rules of classification within this group

The use of available Indexing Codes is mandatory.

B65D 88/18

bellows-shaped (B65D 88/22 takes precedence; connection of valves to inflatable elastic bodies B60C 29/00)

Definition statement

This subclass/group covers:

Illustrative example of subject matter classified in this group:

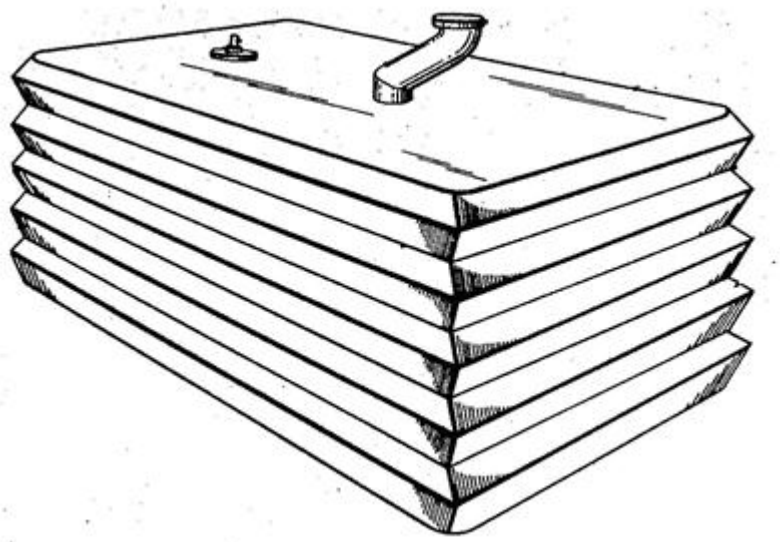

References relevant to classification in this group

This subclass/group does not cover:

Specially adapted for transport (associated with vehicles)	B65D 88/22
Rigid container having flexible side walls	B65D 90/021

B65D 88/20

with rigid end-walls (B65D 88/18, B65D 88/22 take precedence)

References relevant to classification in this group

This subclass/group does not cover:

Large bellows-shaped containers	B65D 88/18
Specially adapted for transport (associated with vehicles)	B65D 88/22

Informative references

Attention is drawn to the following places, which may be of interest for search:

Frames or nets for flexible containers	B65D 90/205
Rigid container having flexible side	B65D 90/021

walls	

B65D 88/22

specially adapted for transport (associated with vehicles, see the relevant subclasses of B60 to B64)

Informative references

Attention is drawn to the following places, which may be of interest for search:

Frames or nets for flexible containers	B65D 90/205

B65D 88/24

by air

Definition statement

This subclass/group covers:
Illustrative example of subject matter classified in this group:

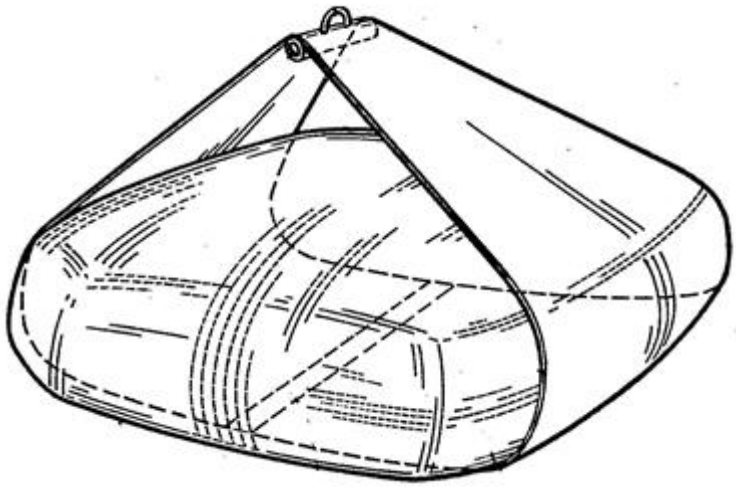

B65D 88/26

Hoppers, i.e. containers having funnel-shaped discharge sections (B65D 88/34 to B65D 88/78 take precedence)

Definition statement

This subclass/group covers:

Illustrative example of subject matter classified in this group:

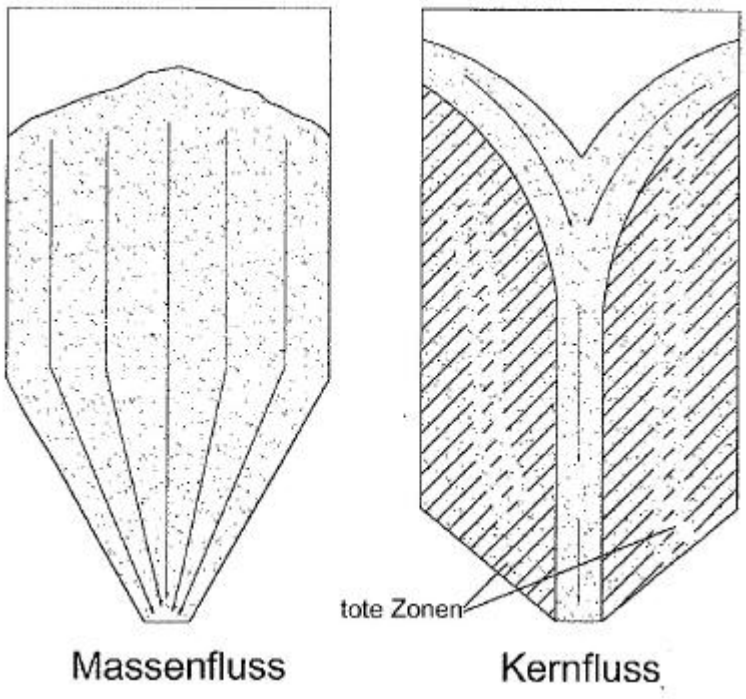

References relevant to classification in this group

This subclass/group does not cover:

For fertilizer	A01C 15/006
Load-transporting element having bottom discharging openings	B60P 1/56
Hopper for rail carriage	B61D 7/02
Silos in general	B65D 88/08
Large containers having floating covers; collapsible; characterised by means facilitating filling emptying; having means for heating, cooling, aerating or other conditioning of contents; for use underground; for use in or under water	B65D 88/34 - B65D 88/78
Closure therefor	B65D 90/54
Hopper for concrete including closures	E04G 21/025

B65D 88/28

Construction or shape of discharge section

Definition statement

This subclass/group covers:
Illustrative example of subject matter classified in this group:

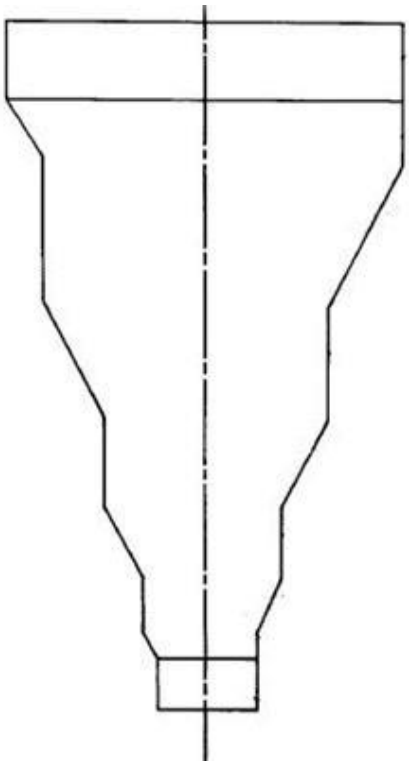

Informative references

Attention is drawn to the following places, which may be of interest for search:

Preventing bridge formation	B65D 88/64

B65D 88/30

specially adapted to facilitate transportation from one utilisation site to another (collapsible hoppers B65D 88/52)

Definition statement

This subclass/group covers:

Illustrative example of subject matter classified in this group:

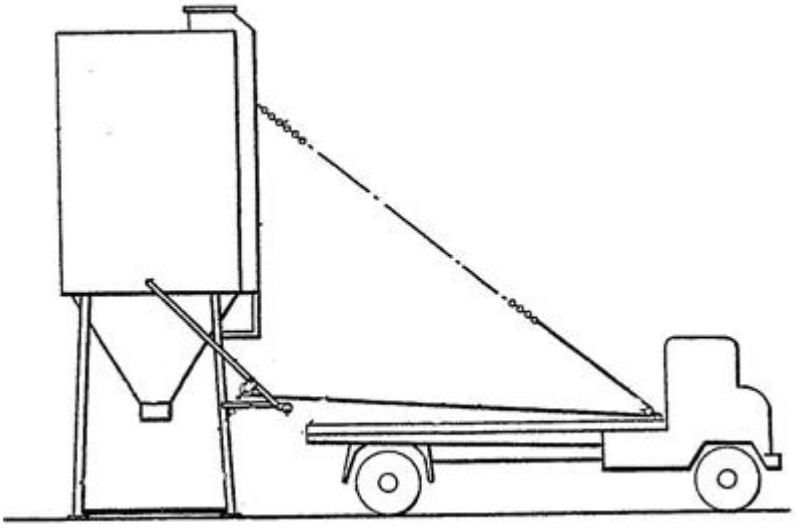

Informative references

Attention is drawn to the following places, which may be of interest for search:

Vehicles predominantly for transporting loads and modified to facilitate loading, consolidating the load, or unloading, fitted with articulated beams for longitudinal displacement of the container	B60P 1/6463

B65D 88/32

in multiple arrangement

Definition statement

This subclass/group covers:

Illustrative examples of subject matter classified in this group:

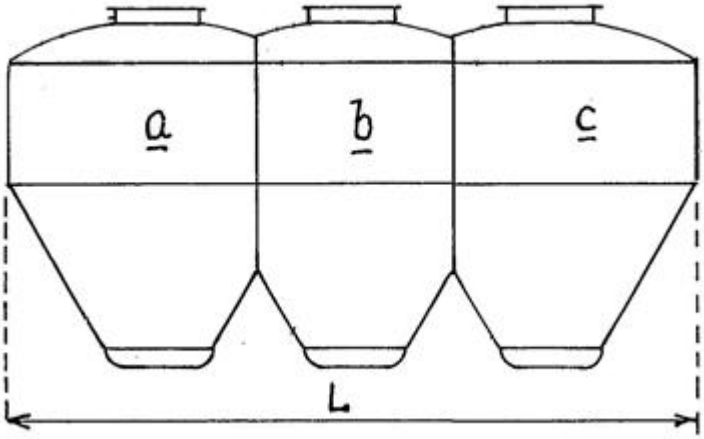
a
b
c
L

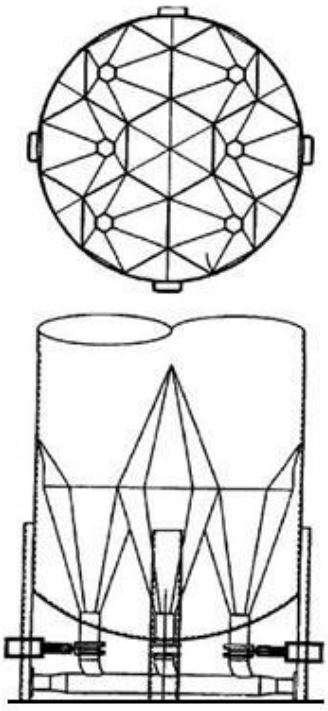

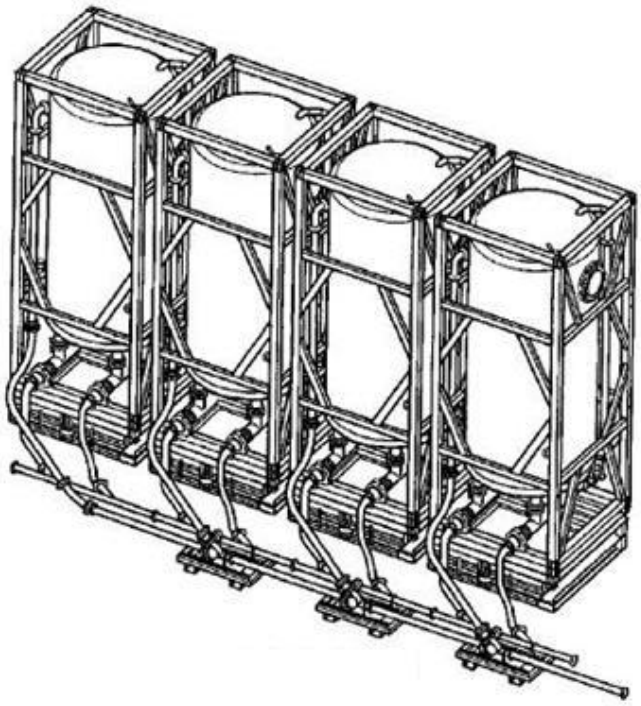

References relevant to classification in this group

This subclass/group does not cover:

General construction of the hopper and of the silo container for gates	B65D 90/60, B65D 90/64, B65D 2590/547

B65D 88/34

having floating covers, e.g. floating roofs or blankets (venting means B65D 90/34)

Definition statement

This subclass/group covers:

Illustrative example of subject matter classified in this group:

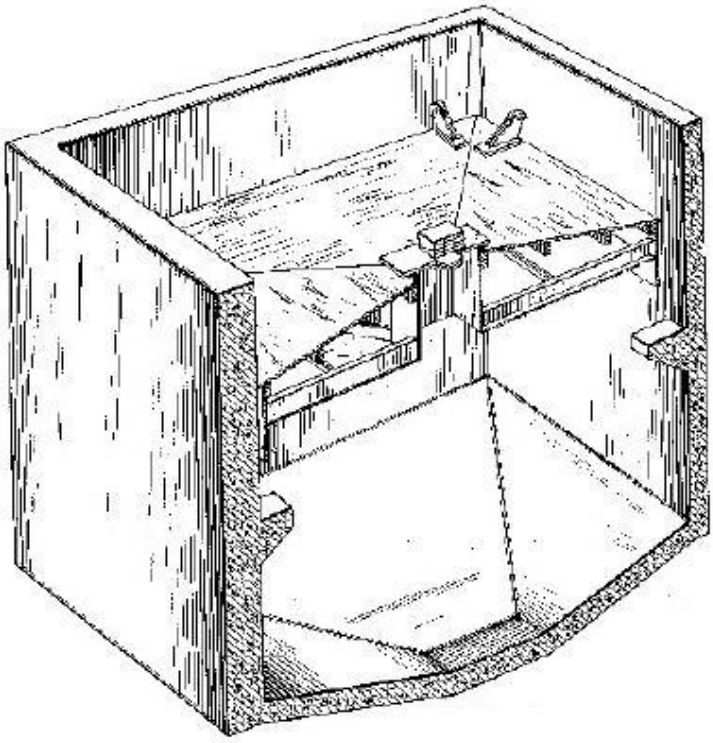

References relevant to classification in this group

This subclass/group does not cover:

Coverings, roofs or other structures for covering manure storage places	A01C 3/028
Preventing evaporation or oxidation of non-metallic liquids by applying a floating layer	B01J 19/16
Covering of solid waste dumping sites	B09B 1/004
Having floating covers	B65D 88/34
For treatment of water, waste water	C02F 3/00
With means for collecting fermentation gases, e.g. methane	C12M 1/107, C02F 11/04
Coverings for baths, e.g. swimming pools,	E04H 4/06, E04H 4/08, E04H 4/10

Informative references

Attention is drawn to the following places, which may be of interest for search:

Means for reducing the vapour space or for reducing the formation	B65D 90/38
Buildings for parking cars, rolling stock, aircraft, vessels or like vehicles	E04H 6/00
General characteristics (FTCLA)	3E070/WB00
Fixtures, e.g. seals (FTCLA)	3E070/WC00
Accessories (FTCLA)	3E070/WD00

B65D 88/36

with relatively movable sections

Definition statement

This subclass/group covers:

Illustrative example of subject matter classified in this group:

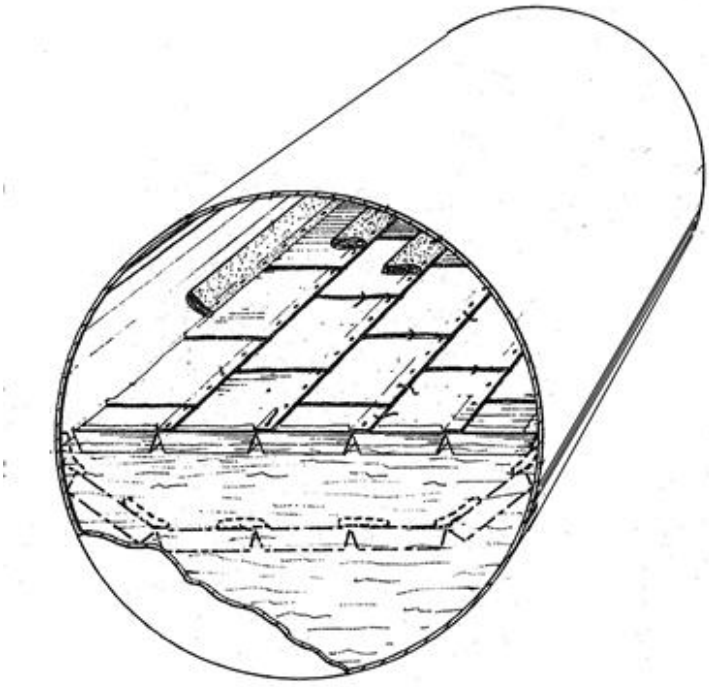

References relevant to classification in this group

This subclass/group does not cover:

Discrete elements disposed side by side	B65D 90/42, E04H 4/08, A01C 3/028

B65D 88/38

with surface water receiver, e.g. drain

Definition statement

This subclass/group covers:
Illustrative example of subject matter classified in this group:

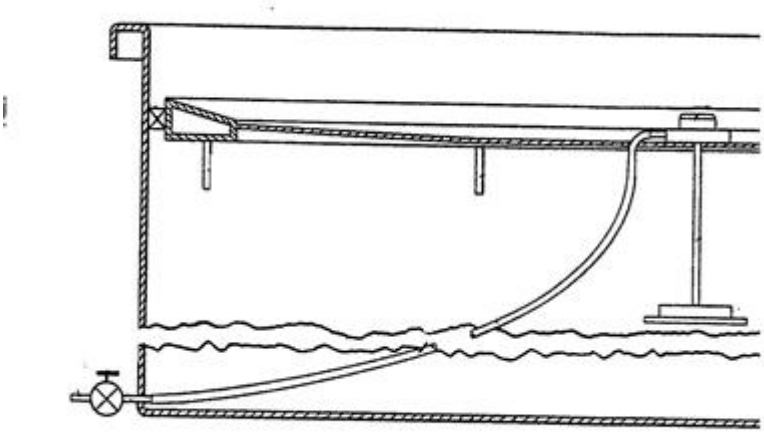

B65D 88/40

with support for aground cover

Definition statement

This subclass/group covers:
Illustrative example of subject matter classified in this group:

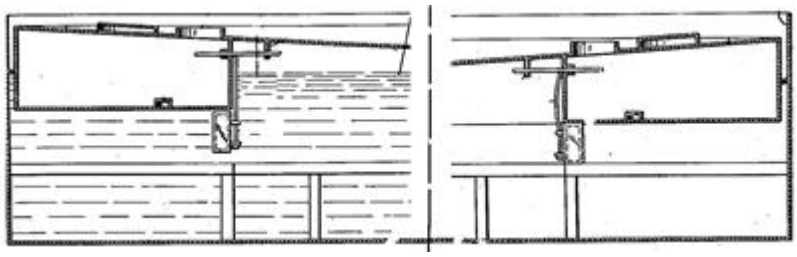

B65D 88/42

with sealing means between cover rim and receptacle

Informative references

Attention is drawn to the following places, which may be of interest for search:

Seals (FTCLA)	3E070/WC00

B65D 88/46

with mechanical means acting on the seal

Definition statement

This subclass/group covers:
Illustrative example of subject matter classified in this group:

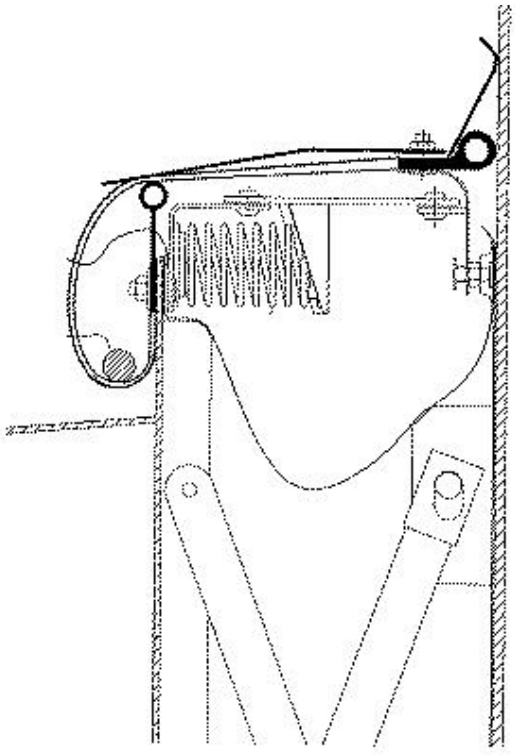

B65D 88/48

with fluid means acting on the seal

Definition statement

This subclass/group covers:

Illustrative example of subject matter classified in this group:

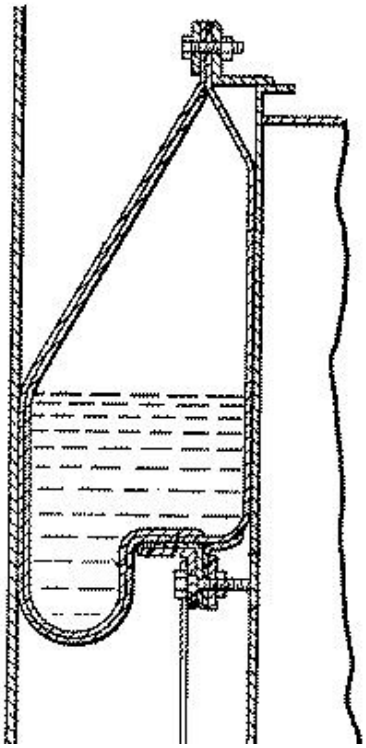

B65D 88/50

with resilient foam or stuffed seal

Definition statement

This subclass/group covers:
Illustrative example of subject matter classified in this group:

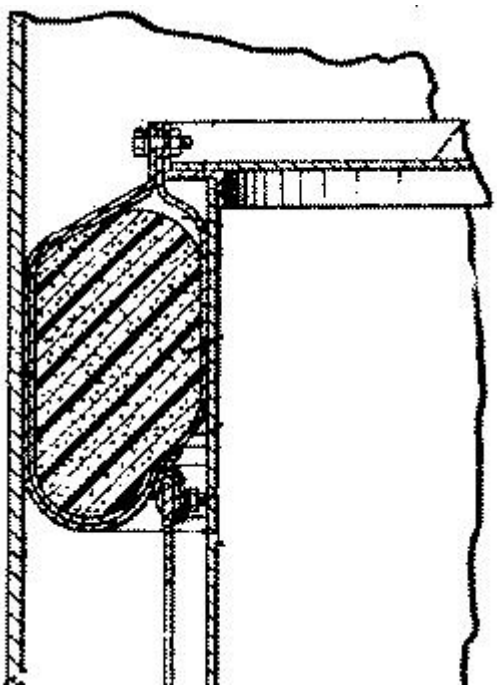

B65D 88/52

collapsible, i.e. with walls hinged together or detachably connected

Definition statement

This subclass/group covers:

Illustrative example of subject matter classified in this group:

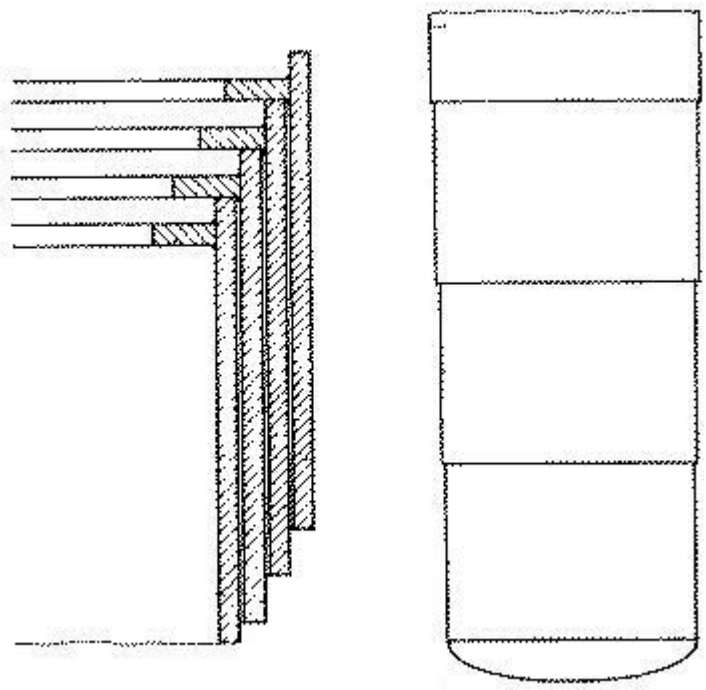

References relevant to classification in this group

This subclass/group does not cover:

Also telescopically collapsing container (see figure)	B65D 88/32
Modular walls	B65D 90/023
Variable capacity	B65D 88/005
For container used as house, hospital, office etc.	E04B 1/3445

B65D 88/522

[N: all side walls hingedly connected to each other or to another component of the container]

Definition statement

This subclass/group covers:

Illustrative example of subject matter classified in this group:

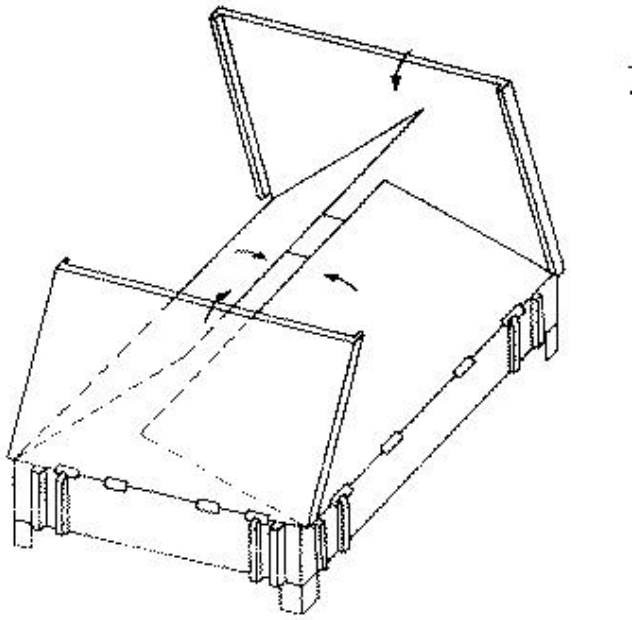

B65D 88/524

[N: and one or more side walls being foldable along an additional median line]

Definition statement

This subclass/group covers:

Illustrative example of subject matter classified in this group:

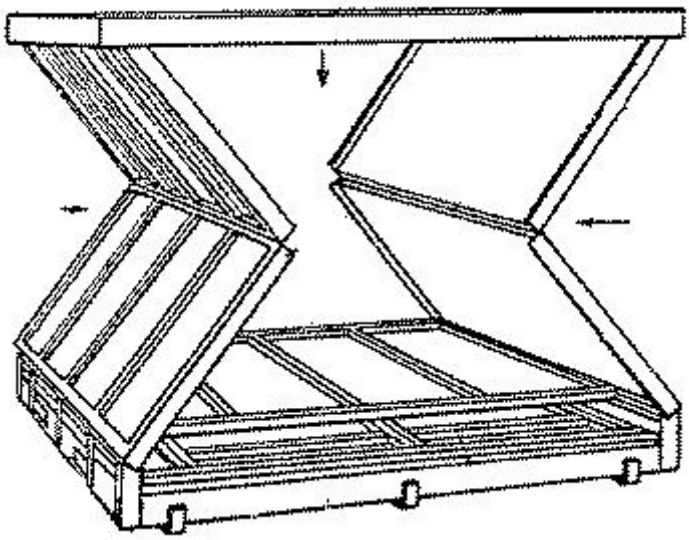

B65D 88/526

[N: with detachable side walls]

Definition statement

This subclass/group covers:

Illustrative example of subject matter classified in this group:

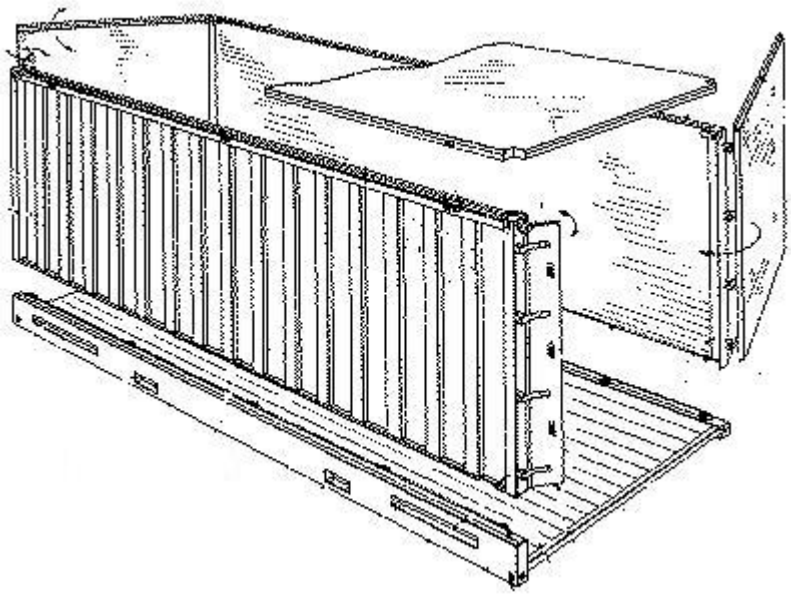

B65D 88/528

[N: all side walls detached from each other to collapse the container]

Definition statement

This subclass/group covers:

Illustrative example of subject matter classified in this group:

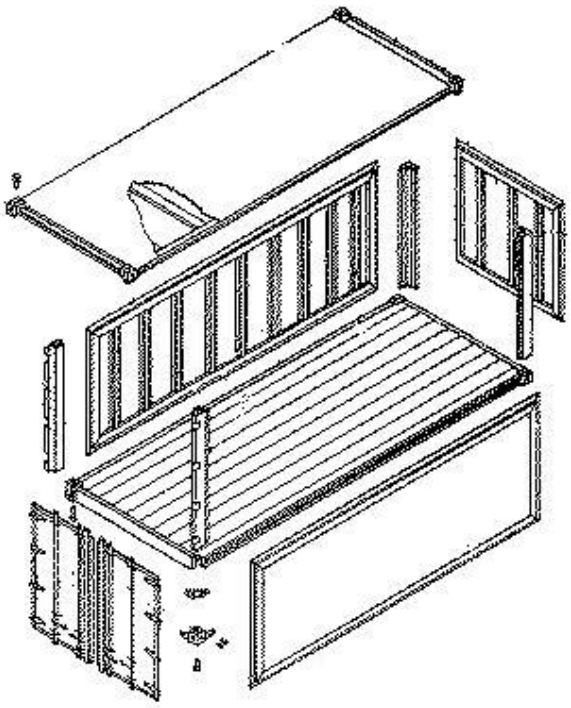

Informative references

Attention is drawn to the following places, which may be of interest for search:

Wall construction	B65D 90/023

B65D 88/54

characterised by means facilitating filling or emptying ([N: filling or emptying features for flexible large containers B65B 69/0075;] construction or shape of discharge section of hoppers B65D 88/28; gates or closures B65D 90/54; filling or emptying bunkers, hoppers, or like containers B65G 65/30)

References relevant to classification in this group

This subclass/group does not cover:

By cleaning the container inside	B08B 9/0933, B08B 9/0933
Heating or cooling articles or materials to facilitate packaging	B65B 63/08, B65B 69/0066

Special rules of classification within this group

The use of available Indexing Codes is mandatory.

B65D 88/542

[N: Ramps forming part of the container (ramps per se B65G 69/28; for ambulances A61G 3/061; for vehicles in general B60P 1/43)]

Definition statement

This subclass/group covers:

Illustrative example of subject matter classified in this group:

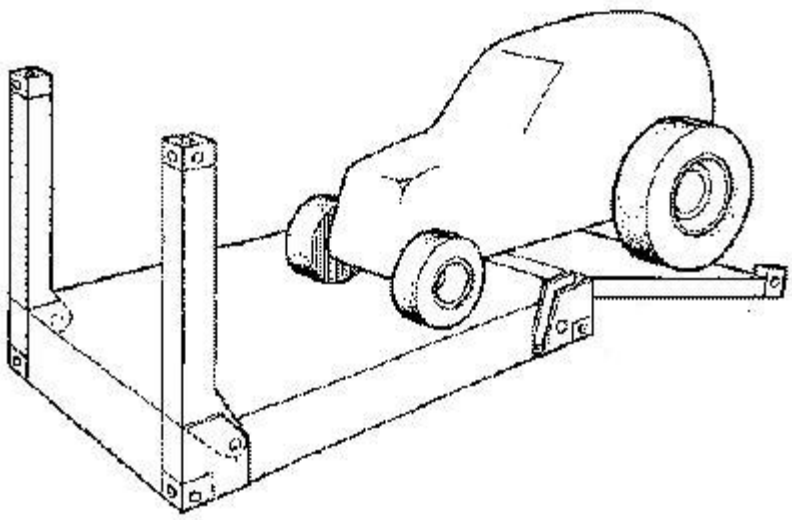

Informative references

Attention is drawn to the following places, which may be of interest for search:

Ramps per se	B65G 69/28
For vehicles in general	B60P 1/43

Special rules of classification within this group

The use of available Indexing Codes is mandatory.

B65D 88/544

[N: for filling from below]

Definition statement

This subclass/group covers:
Illustrative example of subject matter classified in this group:

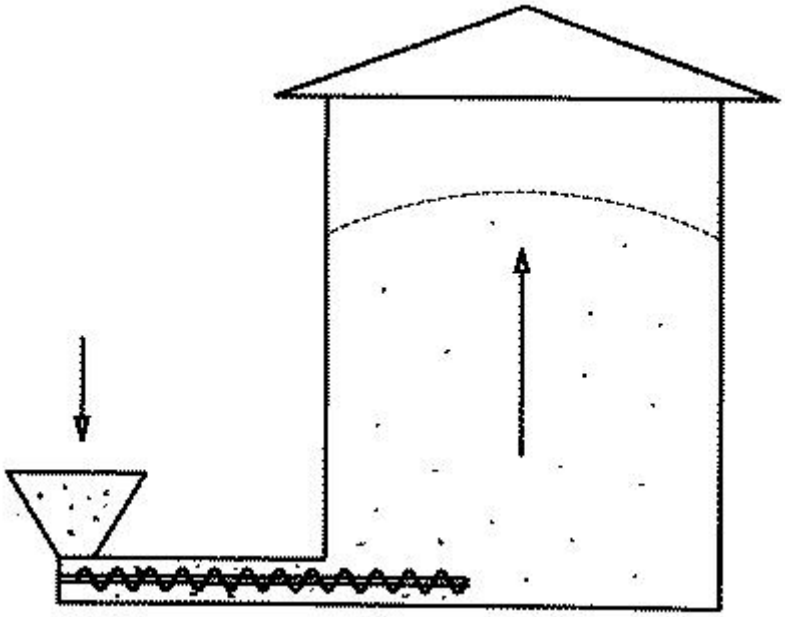

Special rules of classification within this group

The use of available Indexing Codes is mandatory.

B65D 88/546

[N: Devices for loading or unloading and forming part of the container, e.g. rollers, conveyors (loading or unloading vehicles B65G 67/20)]

Definition statement

This subclass/group covers:

Illustrative example of subject matter classified in this group:

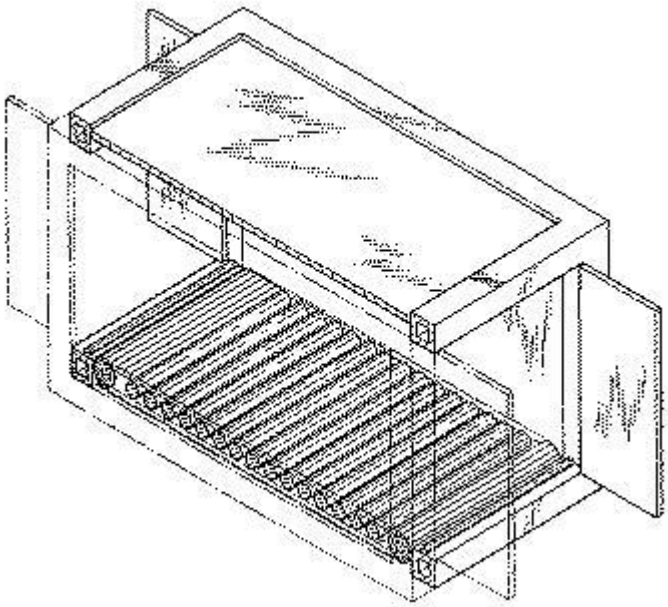

Informative references

Attention is drawn to the following places, which may be of interest for search:

Of internal walls	B65D 88/60

Special rules of classification within this group

The use of available Indexing Codes is mandatory.

B65D 88/548

[N: by pneumatic means (B65D 88/72 takes precedence)]

Definition statement

This subclass/group covers:
Illustrative example of subject matter classified in this group:

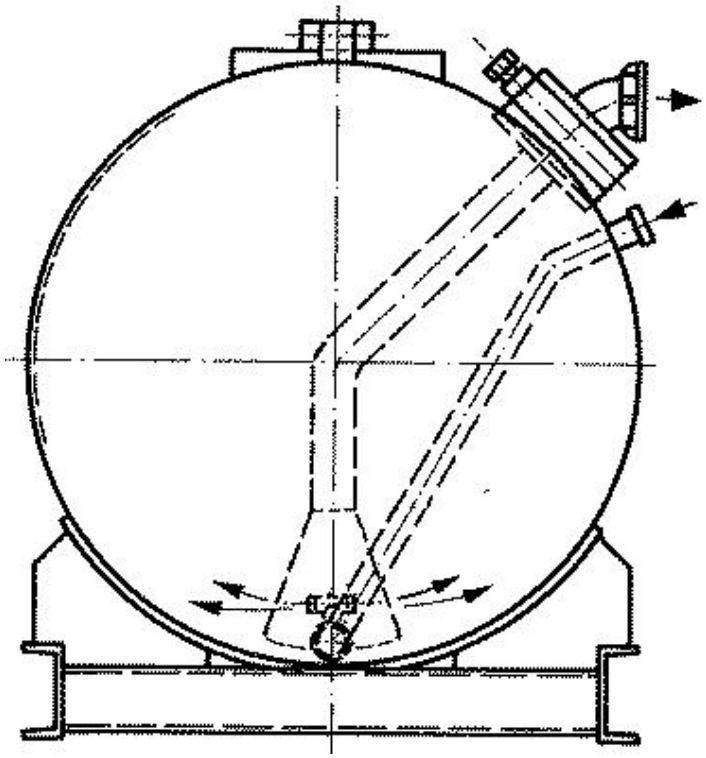

References relevant to classification in this group

This subclass/group does not cover:

Fluidising devices	B65D 88/72

Informative references

Attention is drawn to the following places, which may be of interest for search:

Conveying materials in bulk through troughs, pipes, or tubes by floating the materials, or by flows of gas, liquid, or foam	B65G 53/00

Special rules of classification within this group

The use of available Indexing Codes is mandatory.

B65D 88/56

by tilting

Definition statement

This subclass/group covers:

Illustrative example of subject matter classified in this group:

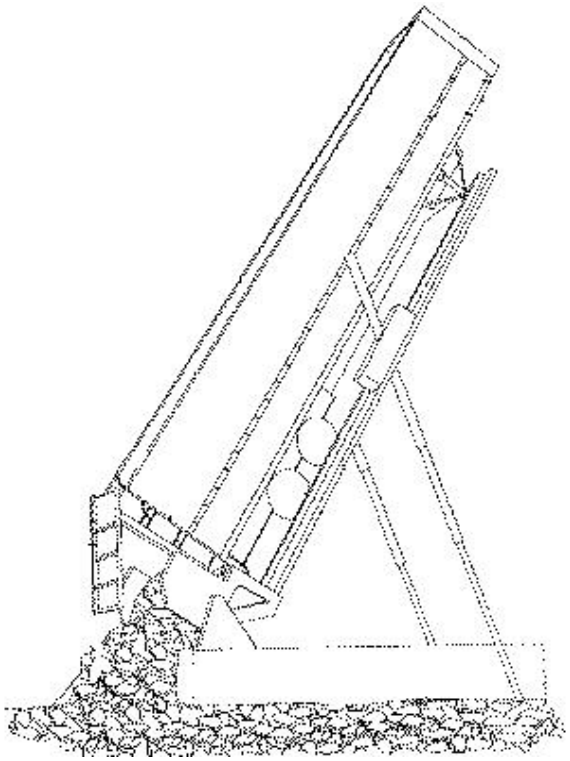

References relevant to classification in this group

This subclass/group does not cover:

Devices for tilting and emptying of containers	B65G 65/23
Tipping wagons	B61D 9/00
Tipping body constructions, elements of tipping devices , loading buckets	B60P 1/28
Lifting of container	B66C

Special rules of classification within this group

The use of available Indexing Codes is mandatory.

B65D 88/58

by displacement of walls

Definition statement

This subclass/group covers:
Illustrative example of subject matter classified in this group:

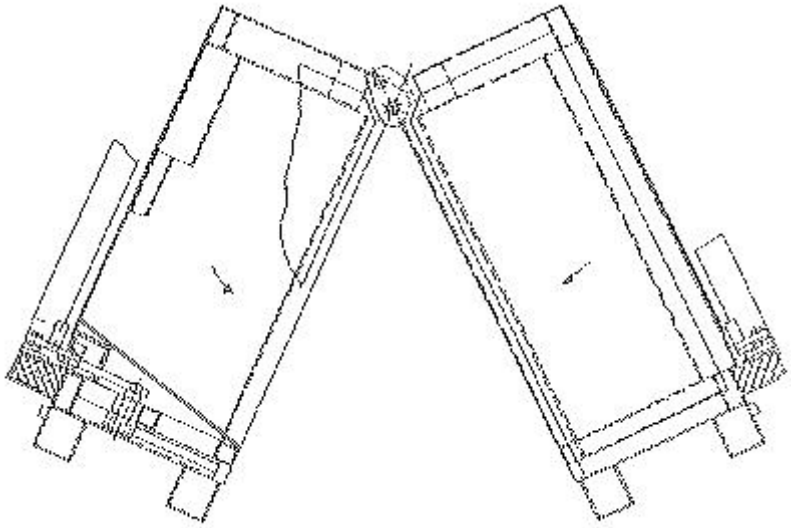

References relevant to classification in this group

This subclass/group does not cover:

Side walls opening towards the outside and bottom opening	B65D 90/623

Special rules of classification within this group

The use of available Indexing Codes is mandatory.

B65D 88/60

of internal walls

Definition statement

This subclass/group covers:
Illustrative example of subject matter classified in this group:

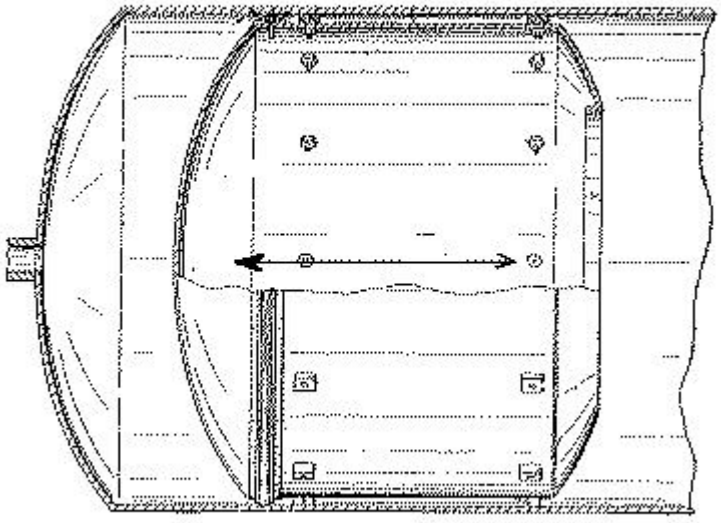

References relevant to classification in this group

This subclass/group does not cover:

Sealing with the container	F16J 15/00, B65D 88/42
Charge and discharge of vehicles with pusher plates	B60P 1/006
Plates fixed to endless chains or belts	B60P 1/365

Special rules of classification within this group

The use of available Indexing Codes is mandatory.

B65D 88/62

the walls being deformable

Definition statement

This subclass/group covers:

Illustrative example of subject matter classified in this group:

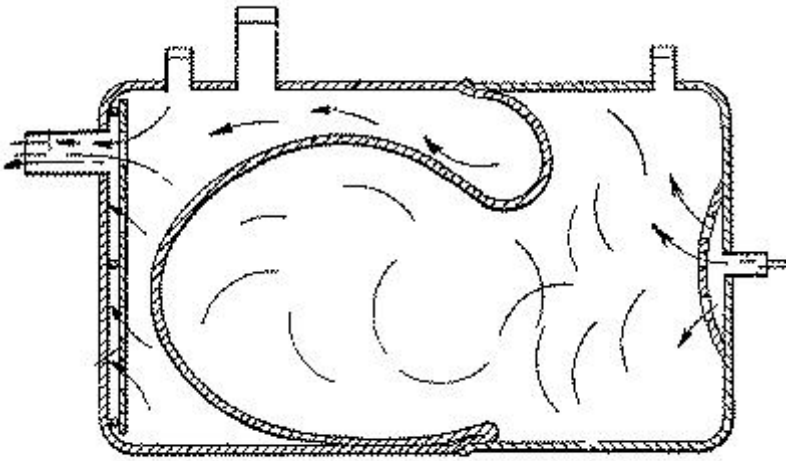

References relevant to classification in this group

This subclass/group does not cover:

For transferring liquids other than fuel or lubricant	**B67D5/02**
For transferring fuels, lubricants, or mixture thereof	**B67D5/04**

Special rules of classification within this group

The use of available Indexing Codes is mandatory.

B65D 88/64

preventing bridge formation

Definition statement

This subclass/group covers:

Illustrative example of subject matter classified in this group:

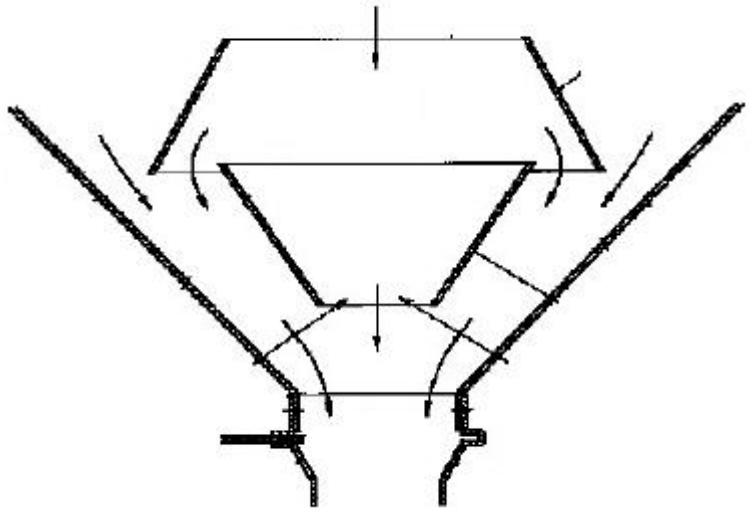

Informative references

Attention is drawn to the following places, which may be of interest for search:

Construction or shape of discharge section	B65D 88/28

Special rules of classification within this group

The use of available Indexing Codes is mandatory.

B65D 88/66

using vibrating or knocking devices

Definition statement

This subclass/group covers:
Illustrative example of subject matter classified in this group:

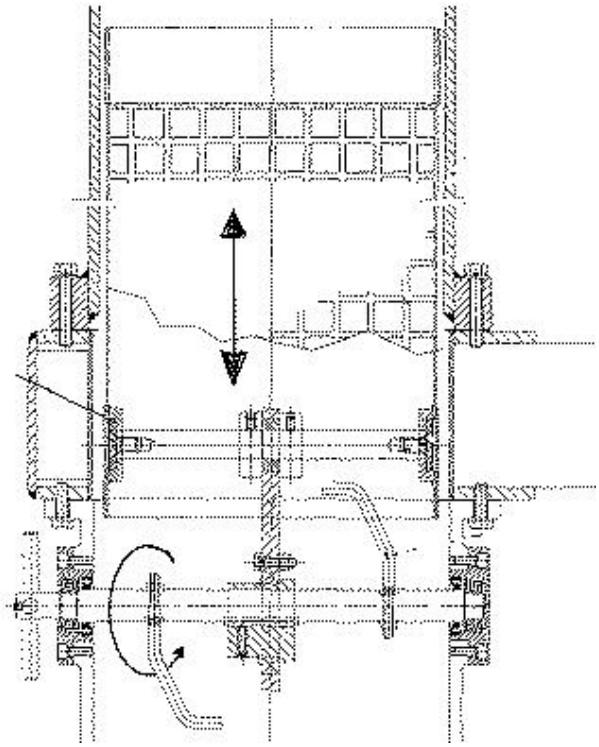

References relevant to classification in this group

This subclass/group does not cover:

Preventing bridge formation using fluid jets	B65D 88/70

Informative references

Attention is drawn to the following places, which may be of interest for search:

Vibrating or knocking devices can be similar to the one in	B65D 88/70, B06B 1/183
Mechanisms that move operating members reciprocatingly (FTCLA)	5D107/EE01

B65D 88/665

[N: using a resonator, e.g. supersonic generator]

Definition statement

This subclass/group covers:

Illustrative example of subject matter classified in this group:

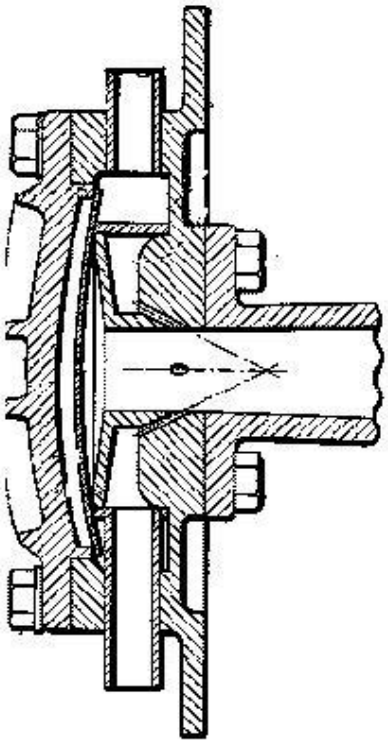

Informative references

Attention is drawn to the following places, which may be of interest for search:

Methods or apparatus for generating mechanical vibrations of infrasonic, sonic, or ultrasonic frequency	B06B 1/00

B65D 88/68

using rotating devices

Definition statement

This subclass/group covers:

Illustrative example of subject matter classified in this group:

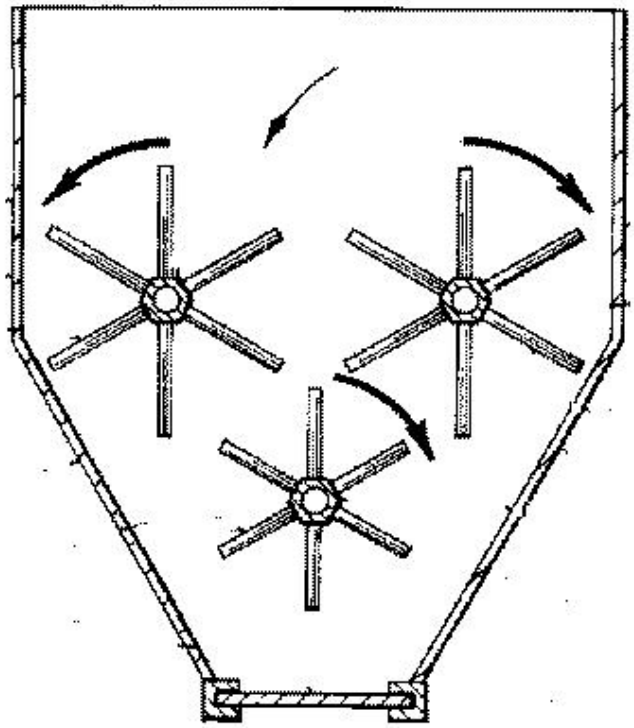

B65D 88/70

using fluid jets (B65D 88/72 takes precedence)

Informative references

Attention is drawn to the following places, which may be of interest for search:

Parts, e.g. diffusion elements; Accessories	B01F 13/0283
Fluidising devices	B65D 88/72

B65D 88/703

[N: Air blowing devices, i.e. devices for the sudden introduction of compressed air into the container]

Definition statement

This subclass/group covers:

Illustrative examples of subject matter classified in this group:

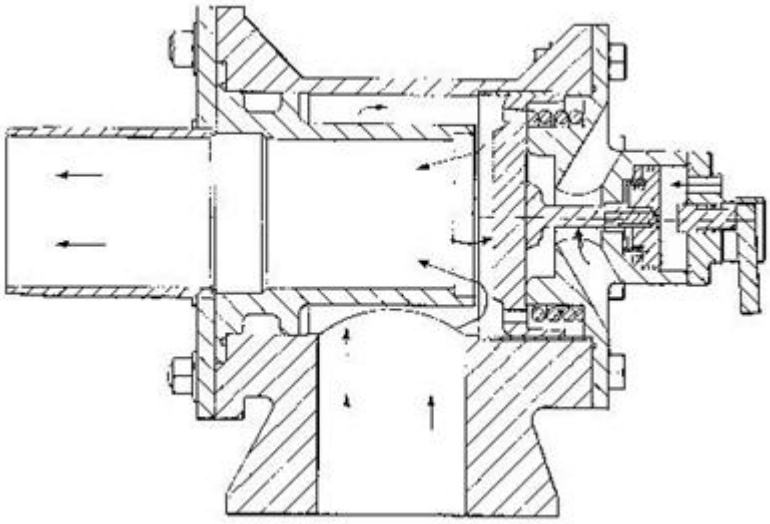

Informative references

Attention is drawn to the following places, which may be of interest for search:

Using a resonator, e.g. supersonic generator	B65D 88/665
Operating means; Releasing devices	F16K 31/00

B65D 88/706

[N: Aerating means, e.g. one-way check valves]

Definition statement

This subclass/group covers:

Illustrative example of subject matter classified in this group:

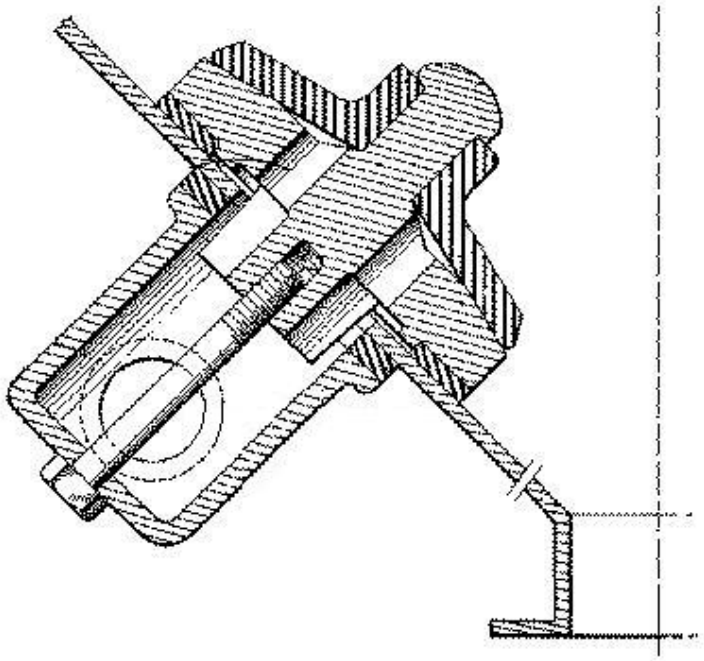

Informative references

Attention is drawn to the following places, which may be of interest for search:

Parts, e.g. diffusion elements; Accessories	B01F 13/0283

B65D 88/72

Fluidising devices

Definition statement

This subclass/group covers:

Illustrative example of subject matter classified in this group:

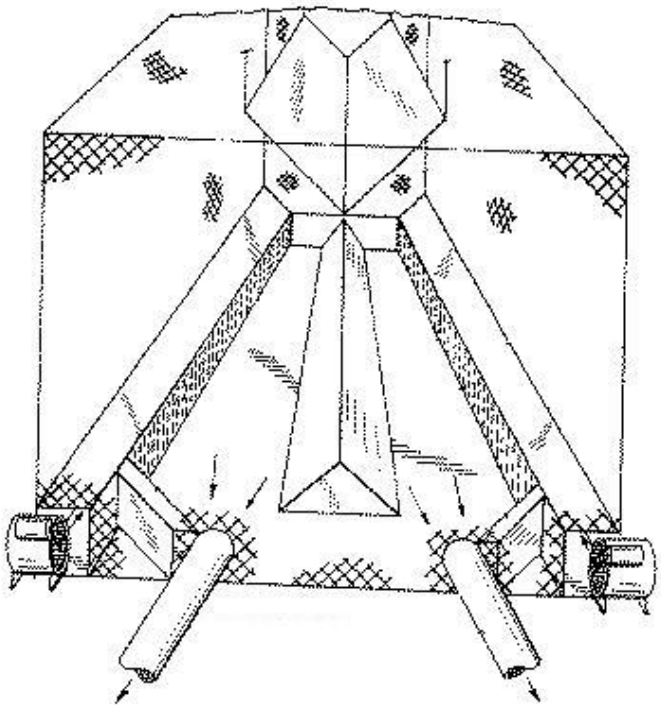

Informative references

Attention is drawn to the following places, which may be of interest for search:

Using fluid jets	B65D 88/70
Gas pressure systems operating with fluidisation of the materials	B65G 53/16
Fluidising	B65G 69/06

B65D 88/74

having means for heating, cooling, aerating or other conditioning of contents

References relevant to classification in this group

This subclass/group does not cover:

Adaptations of heating or cooling devices for liquids to be transferred	**B67D5/62**
Refrigerated cart	F25D
Including a cooling device	F25D 11/003, F25D 19/003

Special rules of classification within this group

The use of available Indexing Codes is mandatory.

B65D 88/741

[N: aerating by ambient air through openings in the wall]

Definition statement

This subclass/group covers:
Illustrative example of subject matter classified in this group:

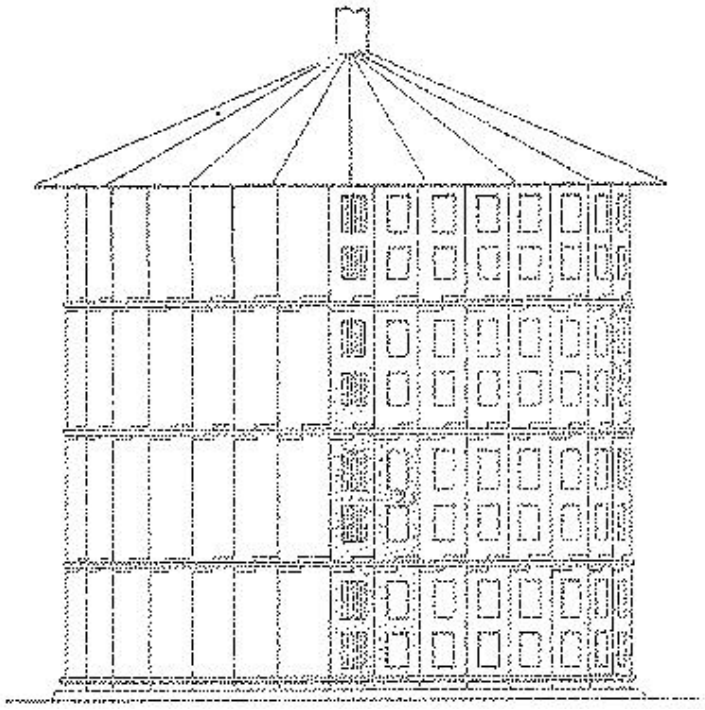

Informative references

Attention is drawn to the following places, which may be of interest for search:

Using ventilating sheaths	B65D 88/742

Special rules of classification within this group

The use of available Indexing Codes is mandatory.

B65D 88/742

[N: using ventilating sheaths]

Definition statement

This subclass/group covers:
Illustrative example of subject matter classified in this group:

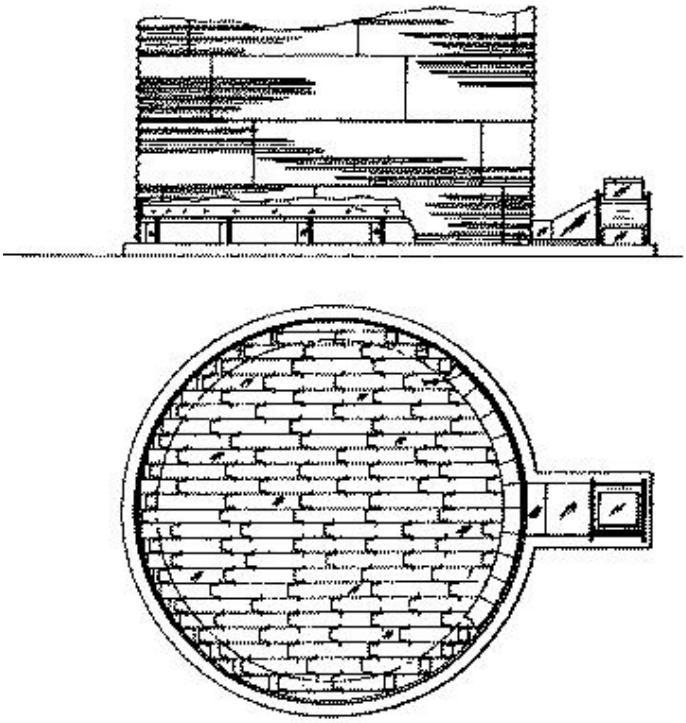

Informative references

Attention is drawn to the following places, which may be of interest for search:

Aerating by ambient air though openings in the wall	B65D 88/741

Special rules of classification within this group

The use of available Indexing Codes is mandatory.

B65D 88/748

[N: for tank containers]

Definition statement

This subclass/group covers:
Illustrative example of subject matter classified in this group:

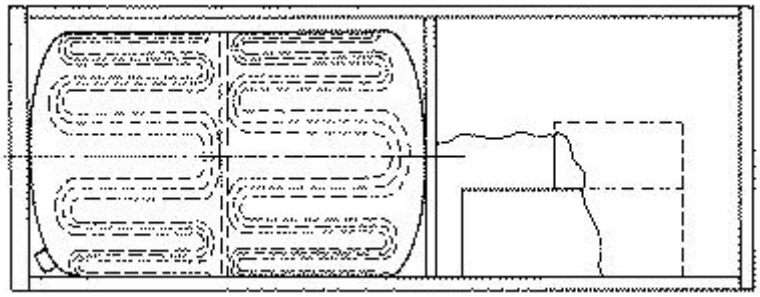

Special rules of classification within this group

The use of available Indexing Codes is mandatory.

B65D 88/76

for use underground (manholes, inspection openings, covers therefor B65D 90/105; [N: special vessels for collecting or storing rain-water for use in the household E03B 3/03; cesspools E03F 11/00])

Definition statement

This subclass/group covers:
Illustrative example of subject matter classified in this group:

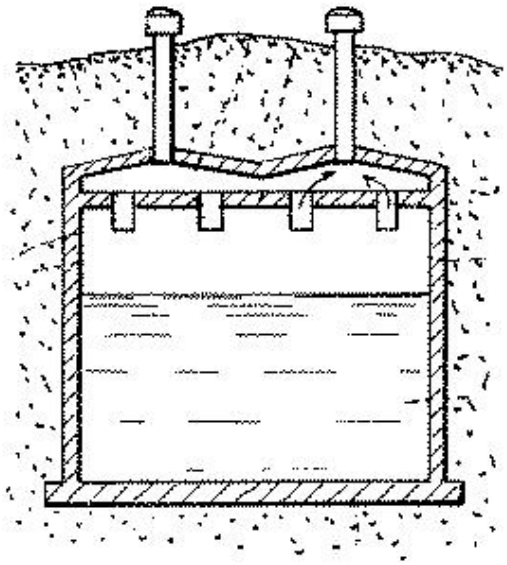

Informative references

Attention is drawn to the following places, which may be of interest for search:

Spillage-retaining means, e.g. recovery ponds	B65D 90/24
Methods from installations for obtaining or collecting drinking water or tap water from rain-water	E03B 3/02

B65D 88/78

for use in or under water (manholes, inspection openings, covers therefor B65D 90/10)

Definition statement

This subclass/group covers:

Illustrative example of subject matter classified in this group:

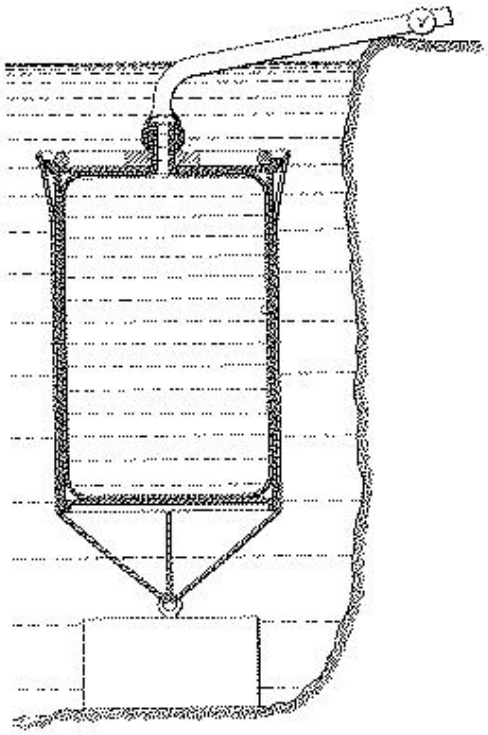

References relevant to classification in this group

This subclass/group does not cover:

Bouncy for container	B65D 90/00, B65D 90/22
For transporting iceberg	**B63B38/00B**

Informative references

Attention is drawn to the following places, which may be of interest for search:

Barges or lighter	B63B 35/28
Structures characteristic of submerged tanks (FTCLA)	3E070/WE00

B65D 90/00

Component parts, details or accessories for large containers (B65D 88/34 to B65D 88/78 take precedence)

References relevant to classification in this group

This subclass/group does not cover:

Large containers having floating covers	B65D 88/34
Large containers for use in or under water	B65D 88/78
Transferring or trans-shipping at storage areas	B65G 63/004
Logistic	**G06Q10/00D**

Informative references

Attention is drawn to the following places, which may be of interest for search:

Trans-receiver or transponder	B65D 2203/10, G06K
Accessories characteristic of containers (FTCLA)	3E070/WJ00

Special rules of classification within this group

The use of available Indexing Codes is mandatory.

B65D 90/0006

[N: Coupling devices between containers, e.g. ISO-containers (coupling devices between containers and vehicles B60P 7/13)]

Definition statement

This subclass/group covers:

Illustrative examples of subject matter classified in this group:

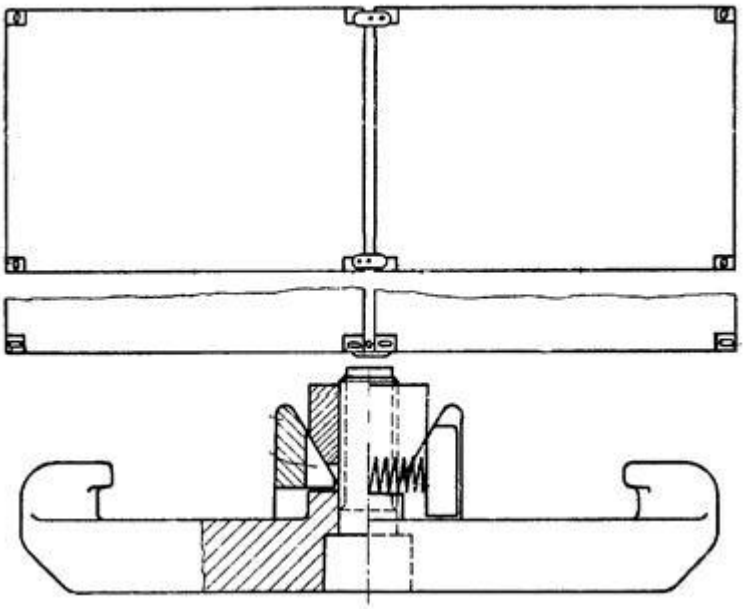

References relevant to classification in this group

This subclass/group does not cover:

Container lashings 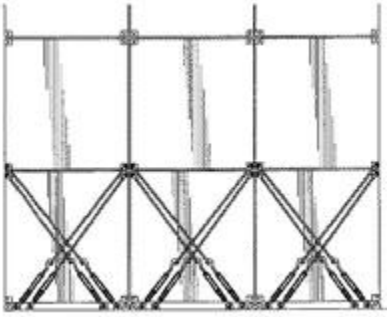	B63B
Securing freight containers or forwarding containers on vehicles	B60P 7/13

Special rules of classification within this group

The use of available Indexing Codes is mandatory.

B65D 90/0013

[N: Twist lock]

Definition statement

This subclass/group covers:

Illustrative example of subject matter classified in this group:

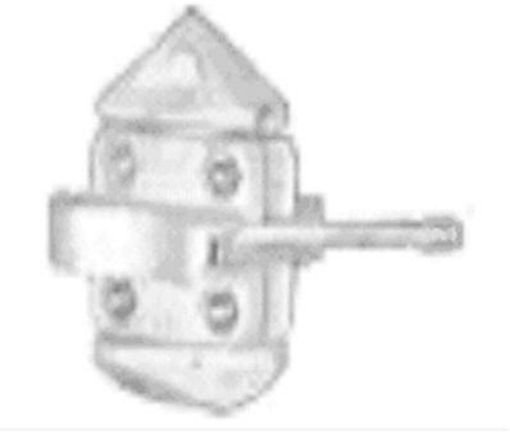

References relevant to classification in this group

This subclass/group does not cover:

Coupling devices between containers on vehicles using twist-Locks	B60P 7/132
Fixing containers on railway carriage	B61D 45/007
Coupling devices between containers on ships	B63B 25/004
Coupling with lifting device	B66C 1/663
Locks or fastenings for railway freight cars or the like, for lorries, for forwarding containers	**E05B65/14**

Informative references

Attention is drawn to the following places, which may be of interest for search:

All side walls hingedly connected	B65D 88/522
Vertical connection means (FTCLA)	3E070/WJ01
Horizontal connection (FTCLA)	3E070/WJ02, 3E070/WJ03

Special rules of classification within this group

Semi or fully automatic twist lock add B65D 2590/0033.

The use of available Indexing Codes is mandatory.

B65D 90/002

[N: Apparatus for manual or automatic installation/removal of twist-lock]

Definition statement

This subclass/group covers:
Illustrative examples of subject matter classified in this group:

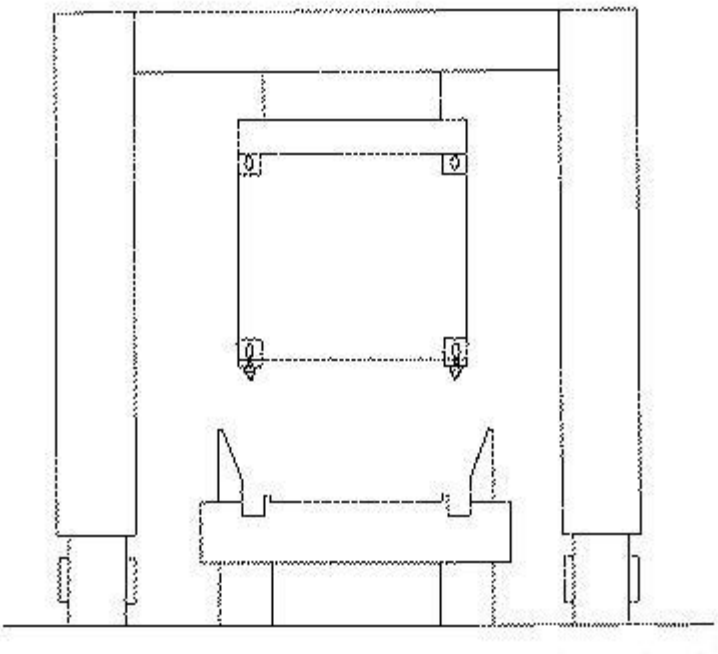

Special rules of classification within this group

The use of available Indexing Codes is mandatory.

B65D 90/0026

[N: Corner fittings characterised by shape, configuration or number of openings]

Definition statement

This subclass/group covers:
Illustrative examples of subject matter classified in this group:



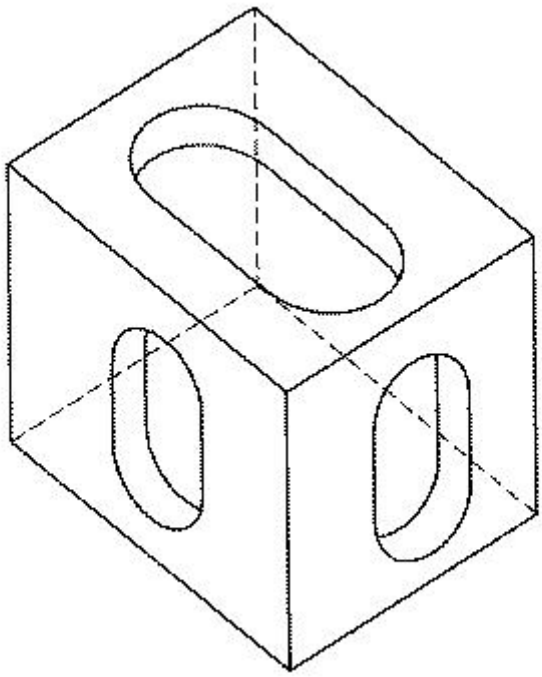

Informative references

Attention is drawn to the following places, which may be of interest for search:

Corner hardware (FTCLA)	3E070/WJ04

B65D 90/0033

[N: Lifting means forming part of the container (B65D 90/0006, B65D 90/0026 take precedence; Loading or unloading container on or from a truck B60P 1/6418; lifting the container using a crane B66C 1/663)]

Definition statement

This subclass/group covers:

Illustrative examples of subject matter classified in this group:

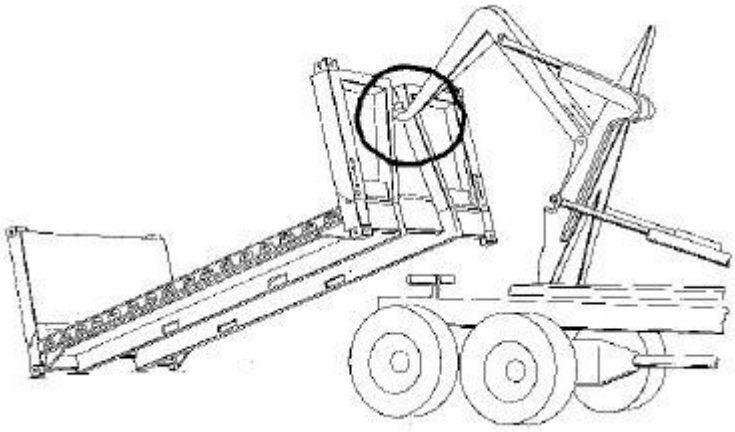

References relevant to classification in this group

This subclass/group does not cover:

Loading or unloading container on or from a truck	B60P 1/6418
Small container	B65D 25/22
FIBC	B65D 88/1675
Coupling devices between containers	B65D 90/0006
Corner fittings characterised by shape, configuration or number of openings	B65D 90/0026
Lifting of container using crane	B66C 1/663
Mobile homes or construction modules	E04G 21/161
Pallets	B65D 2519/00786, **L65D19/00Y90A2**

Informative references

Attention is drawn to the following places, which may be of interest for search:

Hanging means(FTCLA)	3E070/WJ10

Fork pockets(FTCLA)	3E070/WJ06

B65D 90/004

[N: Contents retaining means]

Definition statement

This subclass/group covers:
Illustrative examples of subject matter classified in this group:

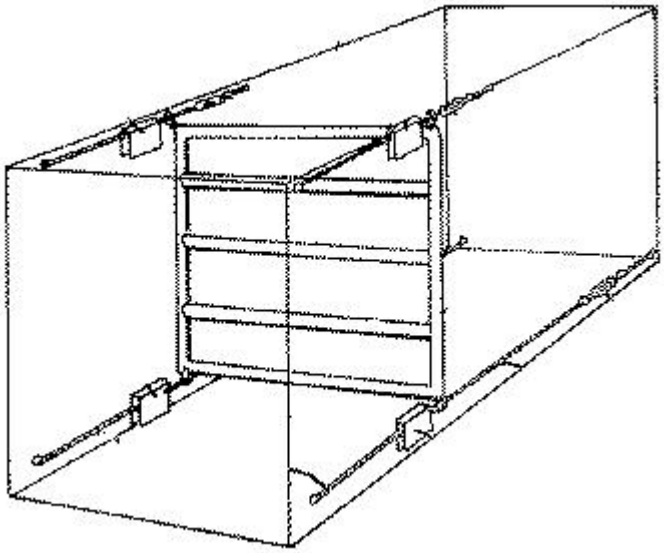

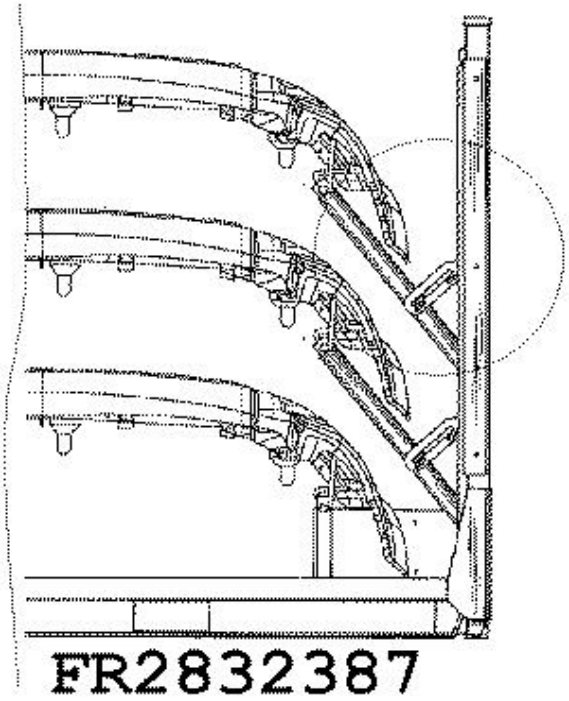

References relevant to classification in this group

This subclass/group does not cover:

Vehicles adapted for carrying vehicles	B60P 3/03
For carrying road vehicles	B60P 3/06, B60P 3/07
Covering/securing of loads on vehicles	B60P 7/02, B60P 7/06
Securing freight containers on vehicles	B60P 7/13
Securing freight containers on aircraft	B64D 9/00
Devices for retaining pallets or freight containers	B64D 9/003
Locating articles on pallets	B65D 19/44, B65D 2519/0081
Bulkheads	B65D 90/047, B65D 90/048
Partition	B65D 90/52, B65D 88/60, B65D 88/62
Stack holders or separators, details of	B65G 1/14

the separators only	
Loading-unloading of container	**B65G67/02P**
Parking for vehicles and equipment therefore	E04H 6/00
For wind motor blades	F03D 11/00
Vehicles	B65D 2585/6867
Specially adapted for a specific good	B65D 85/00, B65D 85/00, **L65D85/68Y**

Informative references

Attention is drawn to the following places, which may be of interest for search:

Elements or devices for locating articles on platforms	B65D 19/44
Stack holders or separators	B65G 1/14
Body parts, e.g. doors, body panels	B65D 2585/6887

B65D 90/008

[N: Doors for containers, e.g. ISO-containers (locking **E05B65/16**)]

Definition statement

This subclass/group covers:

Illustrative example of subject matter classified in this group:

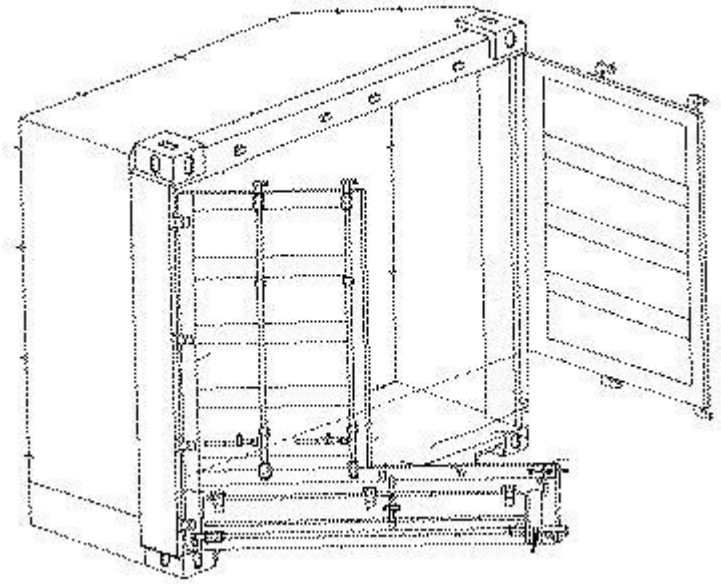

References relevant to classification in this group

This subclass/group does not cover:

Side doors for vehicles	B60J 5/04
Doors for vehicles	**B60J5/10B**
Doors for rail vehicles	B61D 19/003
Open sided container	B65D 88/127
Flexible side walls, e.g. curtains	B65D 90/021
Antitheft means	B65D 90/22, B65D 2211/00
Giving indication of authorised or unauthorised unlocking	E05B 39/00
Locking for back doors of vehicles in general	**E05B65/12**
Locking for back doors of a van or container	**E05B65/16**,
Locking for back doors with a rotary bar	**E05B65/16B**
Other devices specially designed for	E05C 19/00

securing wings of doors	
Hinges in general	E05D

B65D 90/0086

[N: rotating or wound around a horizontal axis]

Definition statement

This subclass/group covers:
Illustrative example of subject matter classified in this group:

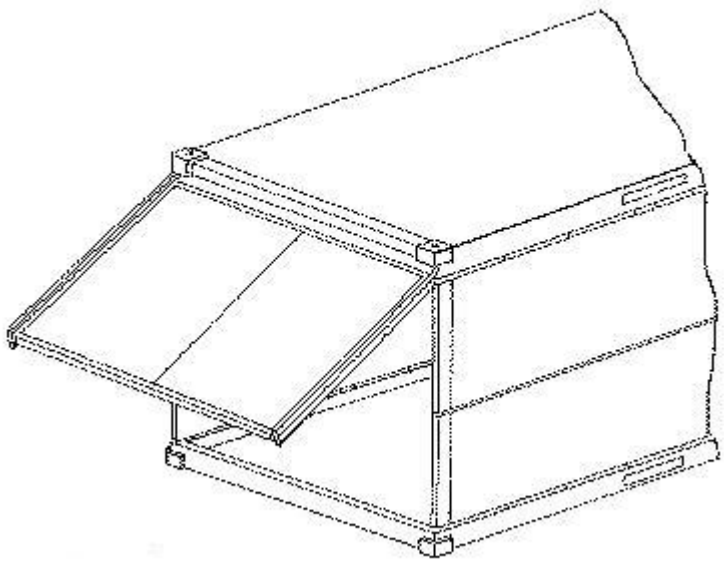

References relevant to classification in this group

This subclass/group does not cover:

Flexible doors side walls or doors	B65D 90/021

B65D 90/02

Wall construction

Special rules of classification within this group

The use of available Indexing Codes is mandatory.

B65D 90/021

[N: Flexible side walls or doors (B65D 88/125 takes precedence)]

Definition statement

This subclass/group covers:

Illustrative example of subject matter classified in this group:

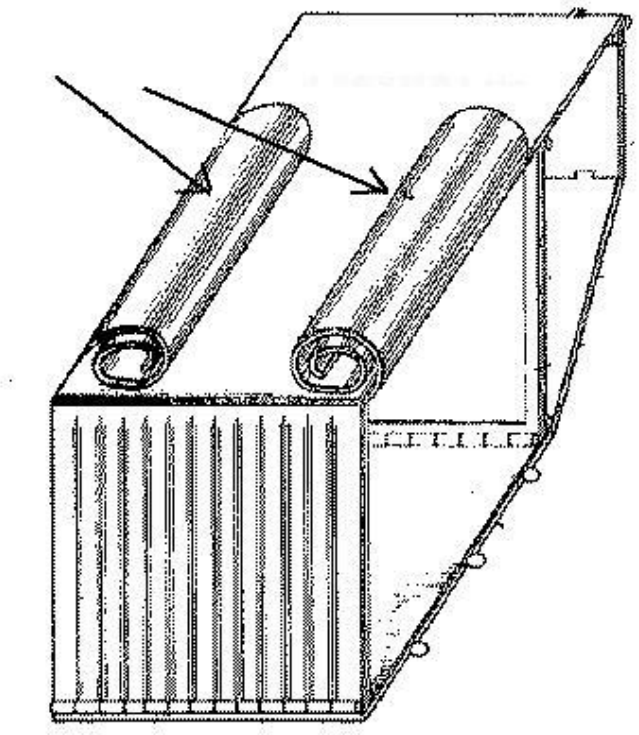

References relevant to classification in this group

This subclass/group does not cover:

Flexible top	B65D 88/125
Flexible container	B65D 88/16

Informative references

Attention is drawn to the following places, which may be of interest for search:

With rigid end walls	B65D 88/20

Special rules of classification within this group

The use of available Indexing Codes is mandatory.

B65D 90/022

[N: Laminated structures (B65D 90/029, B65D 90/505, B65D 90/508 take precedence)]

Definition statement

This subclass/group covers:

Illustrative example of subject matter classified in this group.

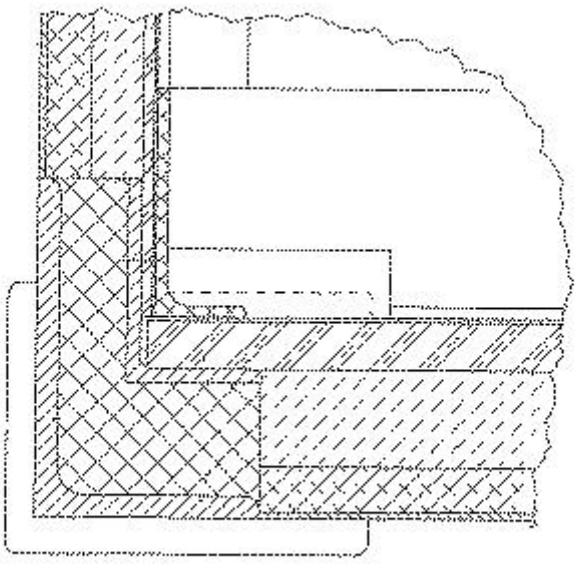

References relevant to classification in this group

This subclass/group does not cover:

Wound structures	B65D 90/029
Comprising porous spaces or layers in walls	B65D 90/505
Comprising electrically conductive layers in walls	B65D 90/508

Informative references

Attention is drawn to the following places, which may be of interest for search:

Coverings, e.g. for insulating purposes	B65D 90/06

Special rules of classification within this group

The use of available Indexing Codes is mandatory.

B65D 90/023

[N: Modular panels]

References relevant to classification in this group

This subclass/group does not cover:

Collapsible container	B65D 88/52

Informative references

Attention is drawn to the following places, which may be of interest for search:

Construction or assembling of bulk storage containers employing civil engineering techniques in situ or off site	E04H 7/00

Special rules of classification within this group

The use of available Indexing Codes is mandatory.

B65D 90/024

[N: with features of cylindrical curvature]

Definition statement

This subclass/group covers:

Illustrative example of subject matter classified in this group:

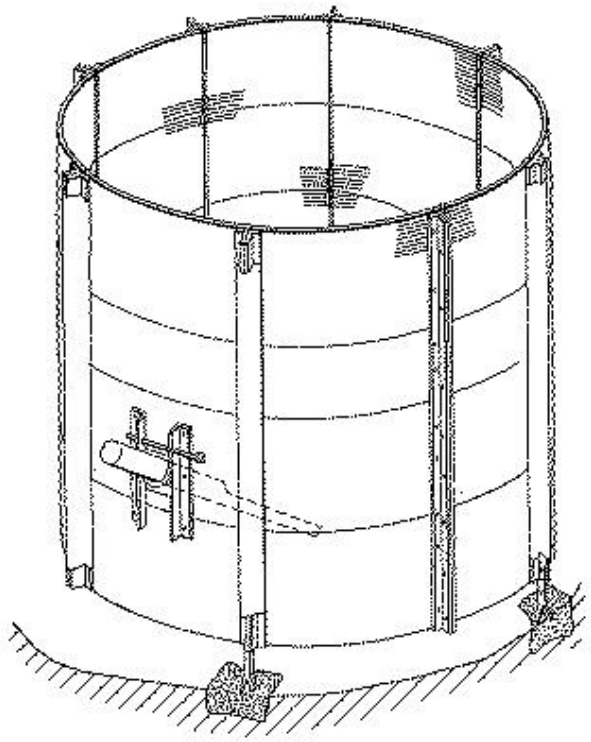

Special rules of classification within this group

The use of available Indexing Codes is mandatory.

B65D 90/025

[N: with features of spheroidal curvature]

Definition statement

This subclass/group covers:
Illustrative example of subject matter classified in this group:

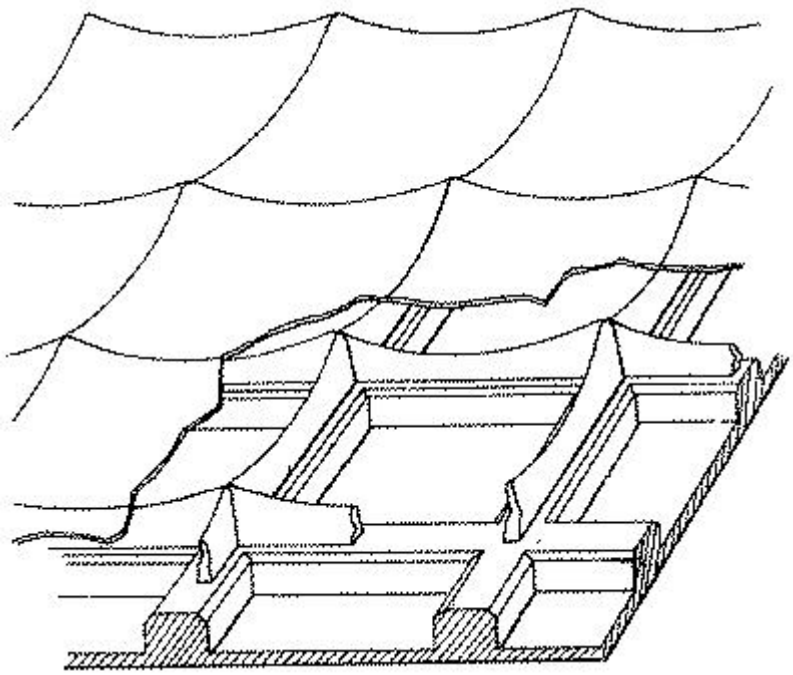

Special rules of classification within this group

The use of available Indexing Codes is mandatory.

B65D 90/026

[N: Parallel slats]

Definition statement

This subclass/group covers:
Illustrative example of subject matter classified in this group:

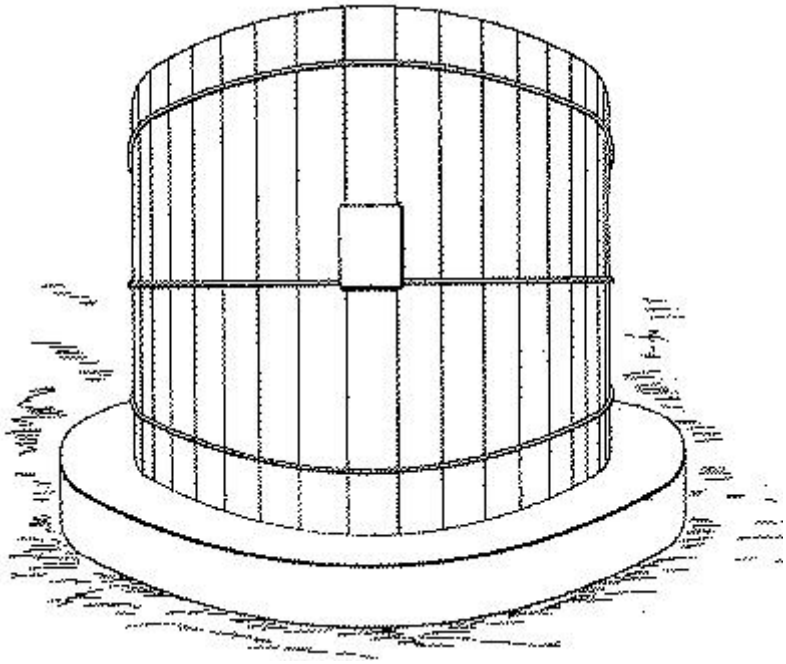

Special rules of classification within this group

The use of available Indexing Codes is mandatory.

B65D 90/027

[N: Corrugated or zig-zag structures; Folded plate]

Definition statement

This subclass/group covers:
Illustrative example of subject matter classified in this group:

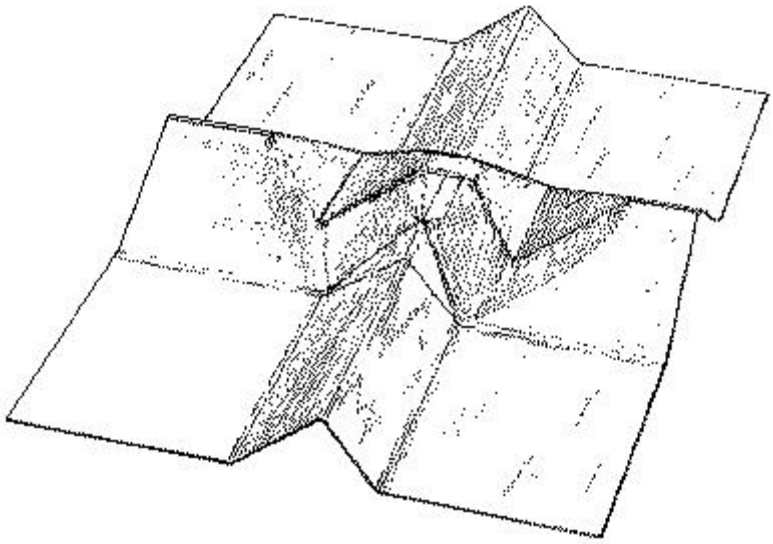

Special rules of classification within this group

The use of available Indexing Codes is mandatory.

B65D 90/028

[N: hollow-walled, e.g. double-walled with spacers (B65D 90/501 takes precedence; linings B65D 90/04)]

Definition statement

This subclass/group covers:

Illustrative example of subject matter classified in this group:

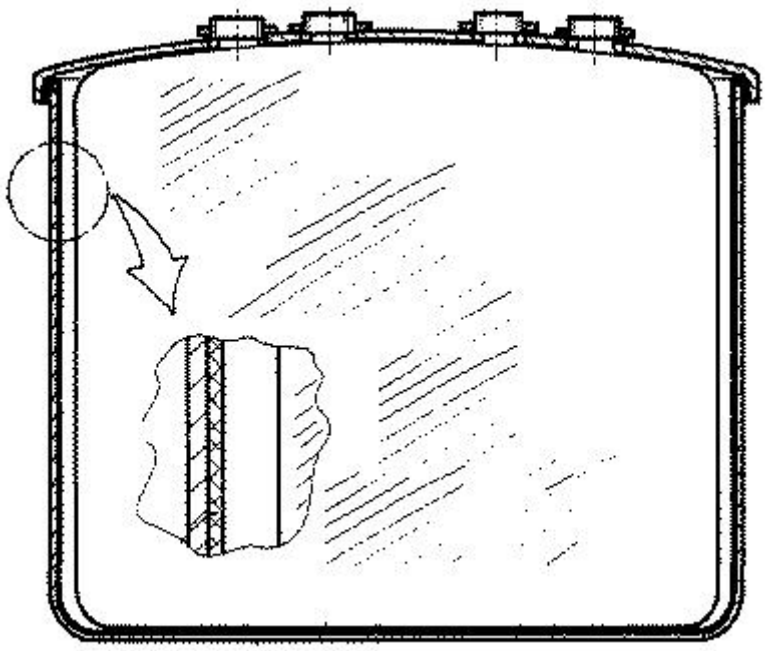

References relevant to classification in this group

This subclass/group does not cover:

Comprising hollow spaces within walls	B65D 90/501

Special rules of classification within this group

The use of available Indexing Codes is mandatory.

B65D 90/029

[N: Wound structures]

Definition statement

This subclass/group covers:
Illustrative example of subject matter classified in this group:

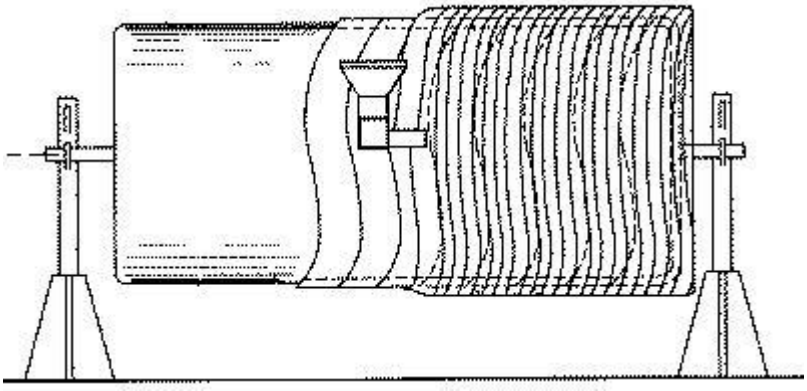

Special rules of classification within this group

The use of available Indexing Codes is mandatory.

B65D 90/04

Linings [N: (for flexible containers B65D 88/1606)]

References relevant to classification in this group

This subclass/group does not cover:

Lining or sheathing of internal surfaces	B29C 63/26

Special rules of classification within this group

The use of available Indexing Codes is mandatory.

B65D 90/041

[N: Rigid liners fixed to the container]

Informative references

Attention is drawn to the following places, which may be of interest for search:

Laminated structures	B65D 90/022

Special rules of classification within this group

The use of available Indexing Codes is mandatory.

B65D 90/043

[N: the liners being in the form of tiles or panels]

Definition statement

This subclass/group covers:
Illustrative example of subject matter classified in this group:

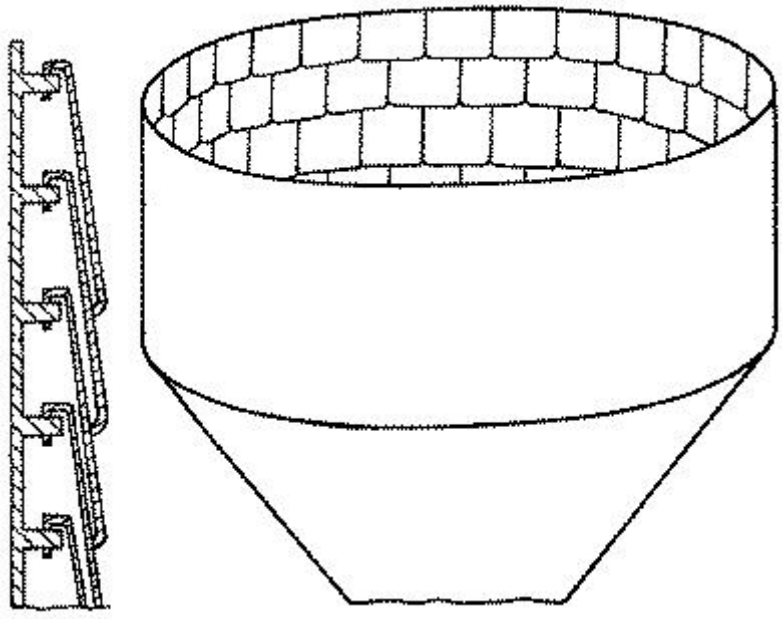

Special rules of classification within this group

The use of available Indexing Codes is mandatory.

B65D 90/046

[N: Flexible liners, e.g. loosely positioned in the container]

Definition statement

This subclass/group covers:
Illustrative examples of subject matter classified in this group:

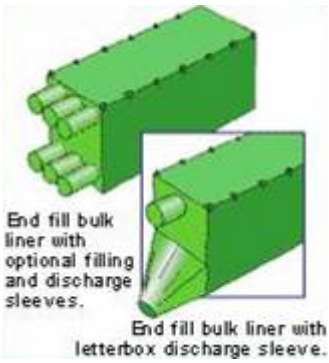

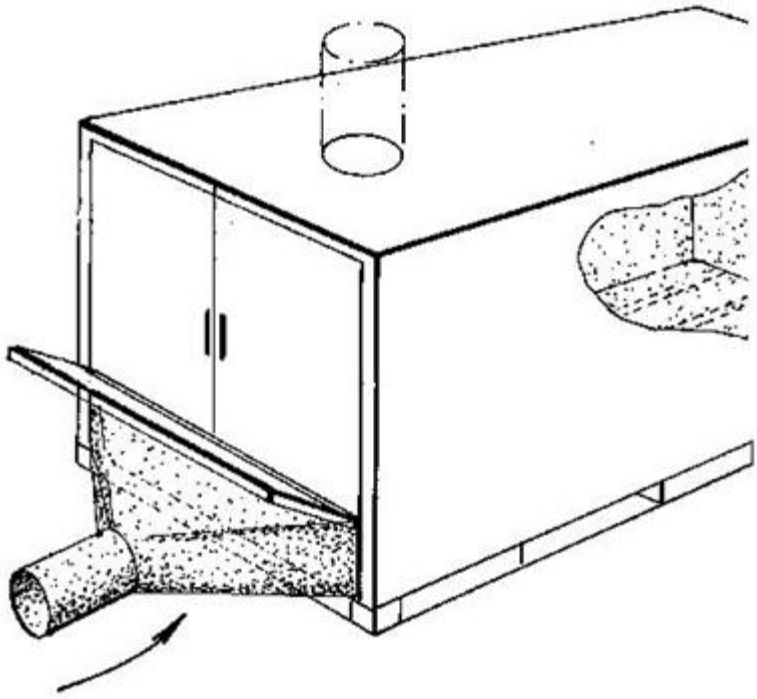

References relevant to classification in this group

This subclass/group does not cover:

Lining or sheathing of internal surfaces	B29C 63/26
For smaller container (also 1000 lt) or in general	B65D 77/06, B65D 77/061
Flexible container for transport	B65D 88/16, B65D 88/1612, B65D 88/22
Flexible spout are spread	B65D 88/1668, B65D 90/56, B65D 88/62, B65D 88/26
Details of the liner	B65D 90/047, B65D 90/048

Frame for flexible liners	B65D 90/205
Closure means	B65D 90/54, B65D 90/008

Informative references

Attention is drawn to the following places, which may be of interest for search:

Vehicles adapted to transport, to carry or to comprise special loads or objects, divided by flexible walls	B60P 3/246
Large containers	B65D 88/62
Arrangements of leakage-indicating devices	B65D 90/50

Special rules of classification within this group

For bladder type liner classify use Indexing Code B65D 2590/046.

The use of available Indexing Codes is mandatory.

B65D 90/047

[N: comprising rigid bracing, e.g. bulkheads]

Definition statement

This subclass/group covers:
Illustrative example of subject matter classified in this group:

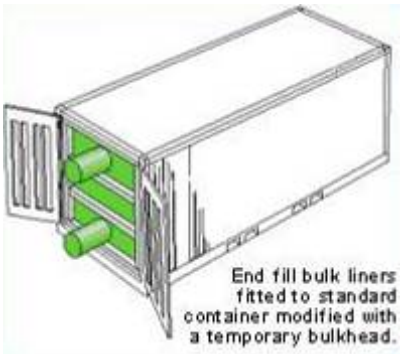

Special rules of classification within this group

For bladder type liner classify use Indexing Code B65D 2590/046

The use of available Indexing Codes is mandatory.

B65D 90/048

[N: comprising bracing straps]

Definition statement

This subclass/group covers:
Illustrative example of subject matter classified in this group:

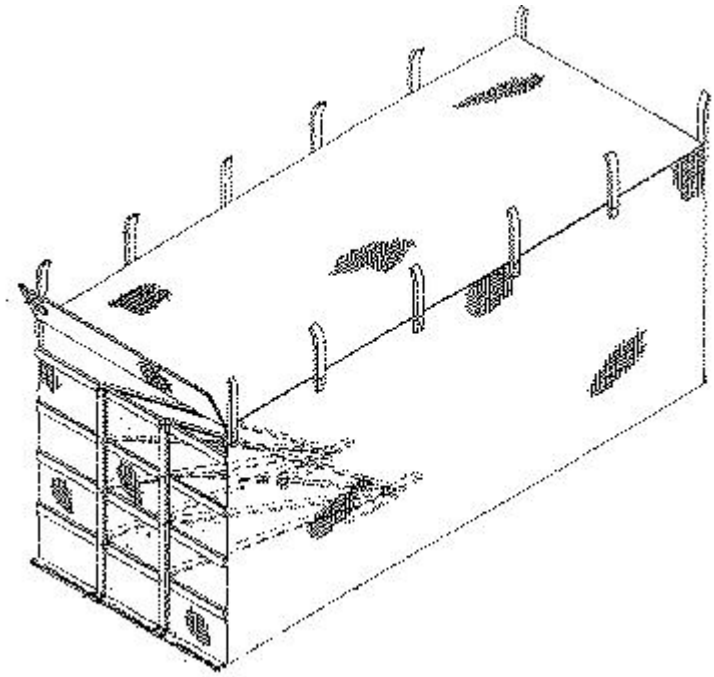

Special rules of classification within this group

For bladder type liner classify use Indexing Code B65D 2590/046

The use of available Indexing Codes is mandatory.

B65D 90/06

Coverings, e.g. for insulating purposes

Definition statement

This subclass/group covers:
Illustrative example of subject matter classified in this group:

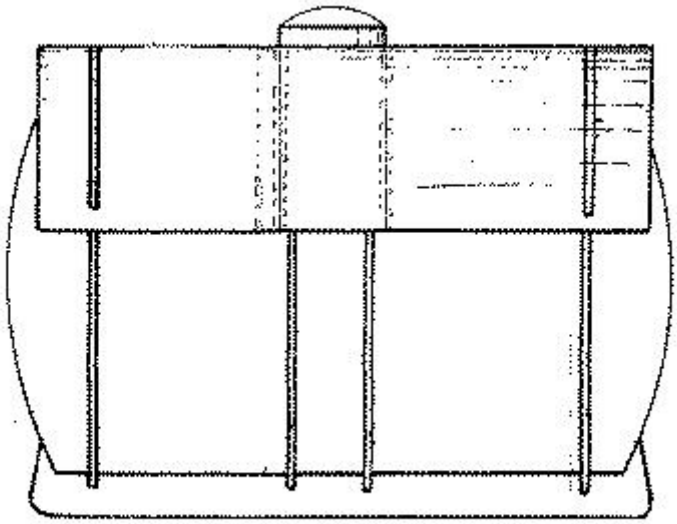

B65D 90/08

Interconnections of wall parts; Sealing means therefor

Definition statement

This subclass/group covers:
Illustrative example of subject matter classified in this group:

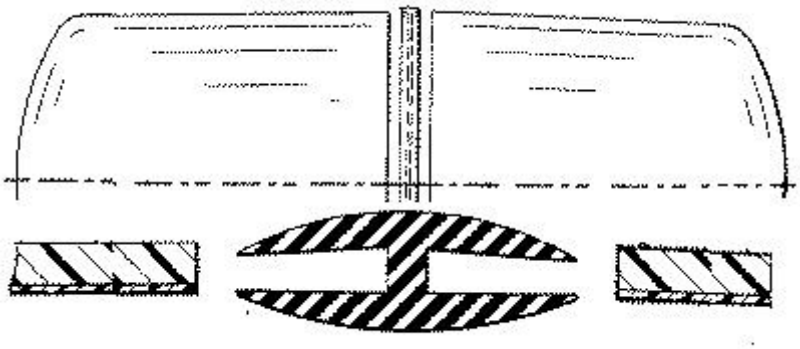

References relevant to classification in this group

This subclass/group does not cover:

Jointing of furniture or the like	F16B 12/00
Furniture tubing	F16B 12/40

Informative references

Attention is drawn to the following places, which may be of interest for search:

Especially corner connections	B65D 88/14
All side walls detached from each other to collapse the container	B65D 88/528

B65D 90/10

Manholes; Inspection openings; Covers therefor (safety features B65D 90/22; covers or similar closure members, for pressure vessels in general F16J 13/00)

Definition statement

This subclass/group covers:

Illustrative example of subject matter classified in this group:

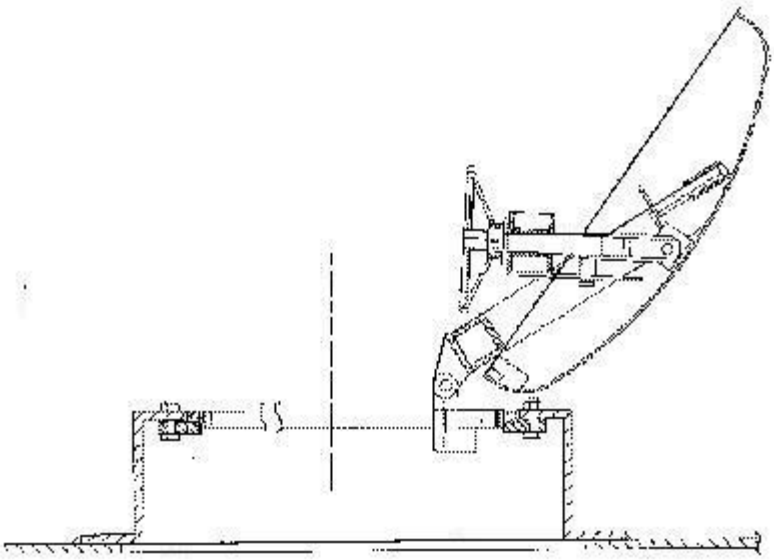

References relevant to classification in this group

This subclass/group does not cover:

Closure, lid for completely opening of the container top	B65D 88/124
Closing means	B65D 90/54
Manholes in general	E02D 29/12, F41H 5/22, E03F 5/02

Covers for manholes	E02D 29/14

Informative references

Attention is drawn to the following places, which may be of interest for search:

Receptacle closures, covers or doors; Mechanisms for operating them	B01F 15/00779
Closures; Sealing mechanisms	B28C 5/4262
Arrangements of access openings or covers therefor	B60P 3/226

B65D 90/105

[N: for underground containers]

Definition statement

This subclass/group covers:

Illustrative example of subject matter classified in this group:

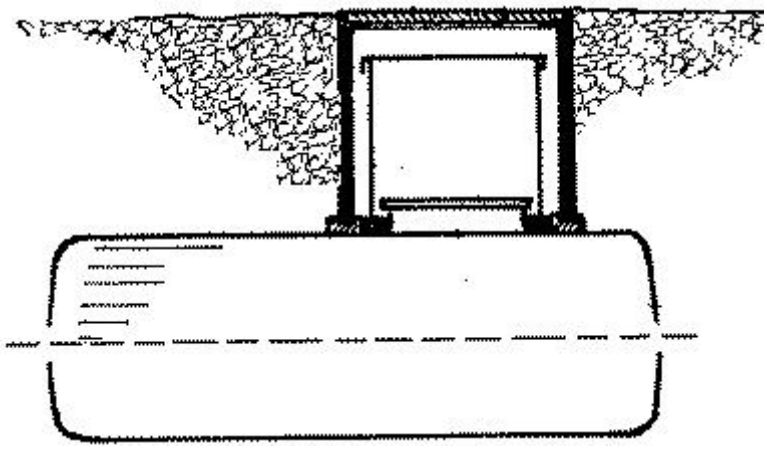

References relevant to classification in this group

This subclass/group does not cover:

Manhole shafts	E02D 29/12
For sewerage	E03F 5/02

B65D 90/12

Supports

Definition statement

This subclass/group covers:
Illustrative example of subject matter classified in this group:

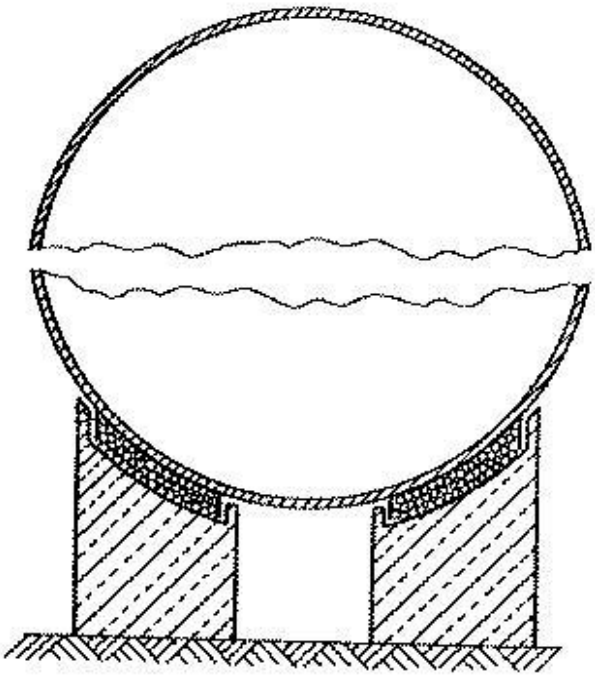

References relevant to classification in this group

This subclass/group does not cover:

Foundations as substructures	E02D 27/00, E04B

Informative references

Attention is drawn to the following places, which may be of interest for search:

Frames or nets, e.g. for flexible containers	B65D 90/20

B65D 90/125

[N: Docking stations, i.e. for the temporary support of the container]

Definition statement

This subclass/group covers:

Illustrative example of subject matter classified in this group:

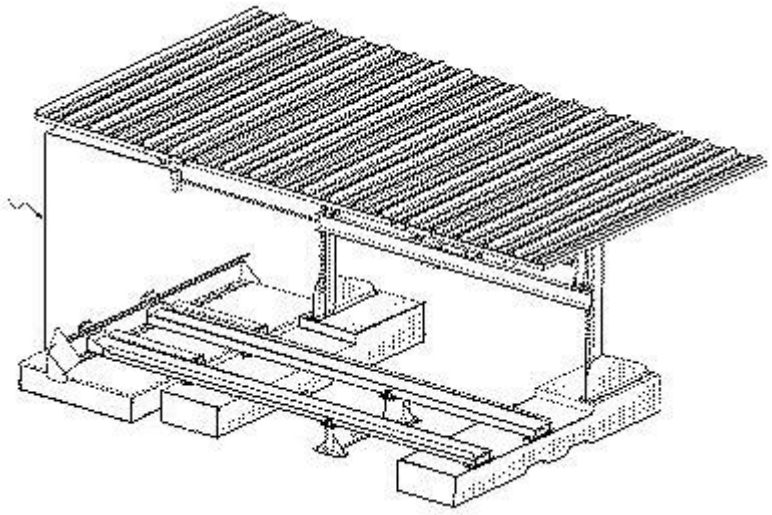

References relevant to classification in this group

This subclass/group does not cover:

Transferring or trans-shipping at storage areas, railway yards, harbours	B65G 63/00
Fixed ramps	B65G 69/28

Informative references

Attention is drawn to the following places, which may be of interest for search:

Spillage-retaining means, e.g. recovery ponds	B65D 90/24

B65D 90/14

Legs, e.g. detachable

Definition statement

This subclass/group covers:
Illustrative example of subject matter classified in this group:

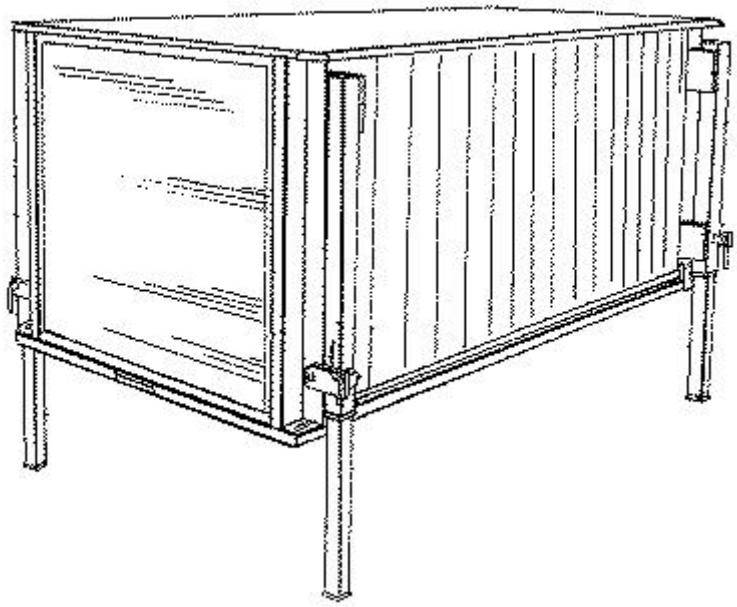

References relevant to classification in this group

This subclass/group does not cover:

For legs details	B65D 90/143, B65D 90/146

Informative references

Attention is drawn to the following places, which may be of interest for search:

Vehicles predominantly for transporting loads and modified to facilitate loading, consolidating the load, or unloading (the load transporting element being a container or similar)	B60P 1/6418

B65D 90/143

[N: Detachable individual legs]

Definition statement

This subclass/group covers:
Illustrative example of subject matter classified in this group:

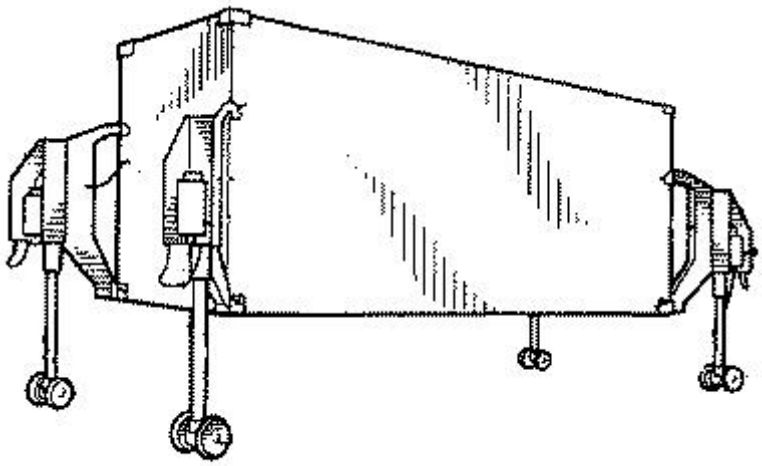

Informative references

Attention is drawn to the following places, which may be of interest for search:

Devices adapted for uninterrupted lifting of loads with racks actuated by pinions	B66F 3/02

B65D 90/146

[N: Detachable combined legs]

Definition statement

This subclass/group covers:
Illustrative examples of subject matter classified in this group:

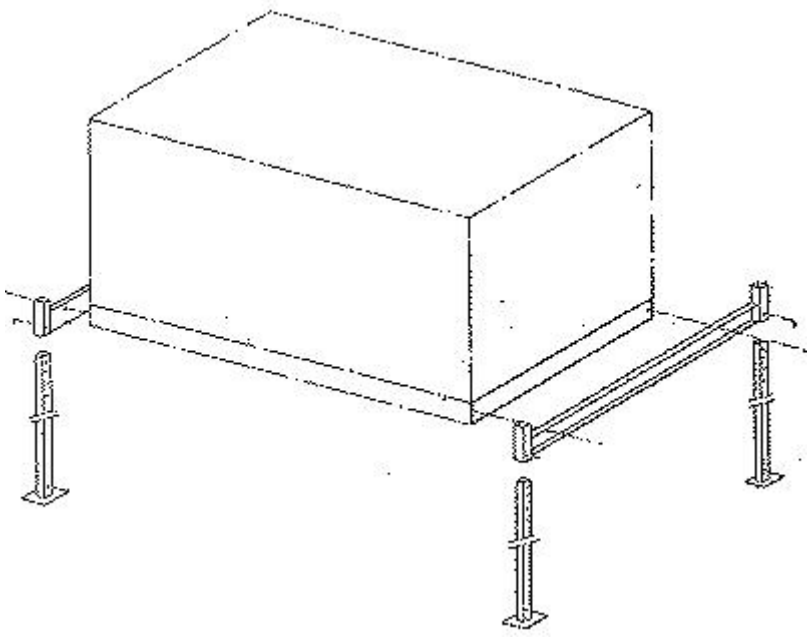

Informative references

Attention is drawn to the following places, which may be of interest for search:

Devices adapted for uninterrupted lifting of loads with racks actuated by pinions	B66F 3/02

B65D 90/16

Skids

Definition statement

This subclass/group covers:

Illustrative examples of subject matter classified in this group:

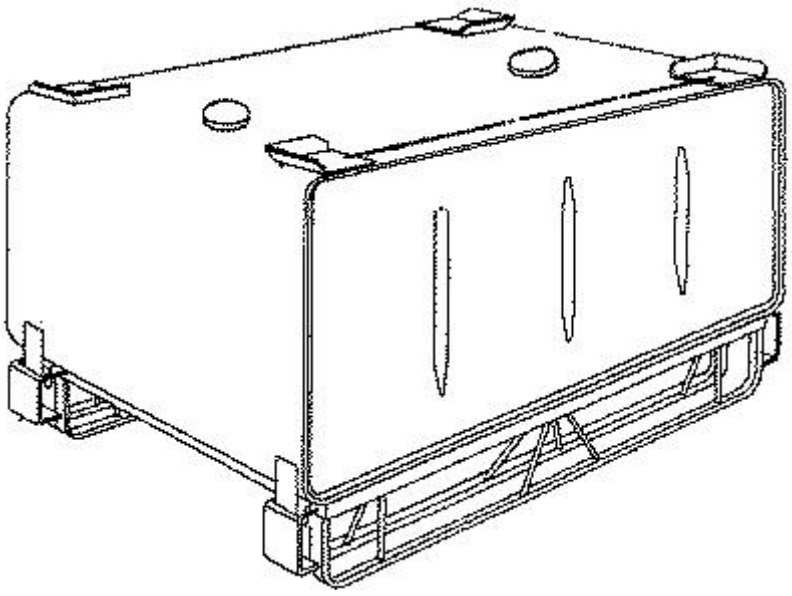

B65D 90/18

Castors, rolls, or the like; e.g. detachable (castors in general B60B)

Definition statement

This subclass/group covers:

Illustrative example of subject matter classified in this group:

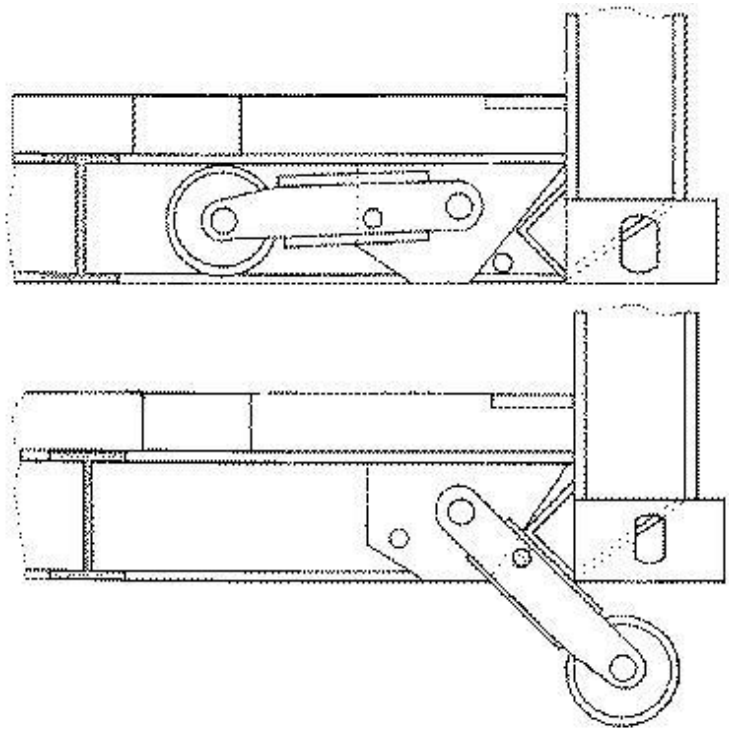

References relevant to classification in this group

This subclass/group does not cover:

Hand carts	B62B

B65D 90/20

Frames or nets, e.g. for flexible containers

References relevant to classification in this group

This subclass/group does not cover:

Articles or materials enclosed in two or more containers disposed one with another (the inner container having a polygonal cross-section)	B65D 77/0453
Articles or materials enclosed in two or more containers disposed one with another (the inner container being a filled deformable tube)	B65D 77/0466

B65D 90/205

[N: for flexible containers, i.e. the flexible container being permanently connected to the frame (B65D 77/061, B65D 88/1612, B65D 90/046 take precedence; unpacking of Flexible Intermediate Bulk Container (FIBC) B65B 69/0075; crane hooks for frames for FIBC B66C 1/226)]

Definition statement

This subclass/group covers:

Illustrative example of subject matter classified in this group.

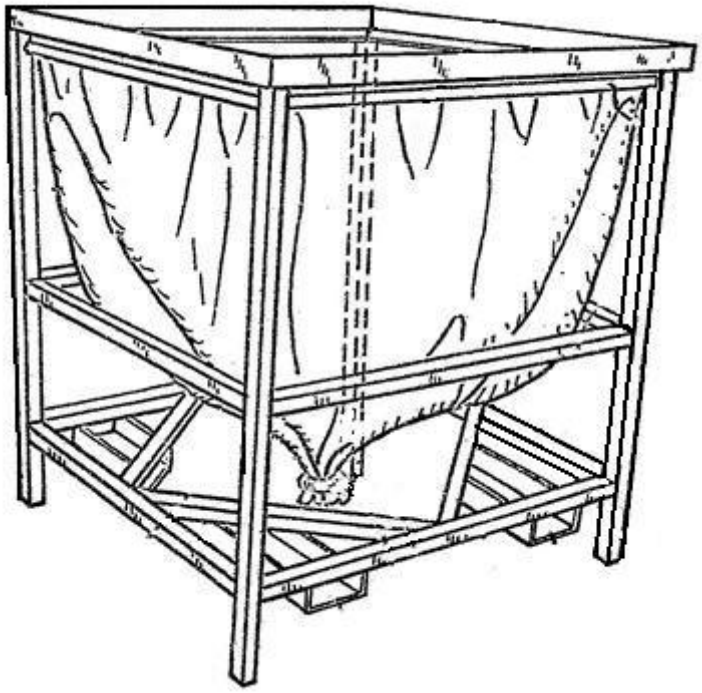

Informative references

Attention is drawn to the following places, which may be of interest for search:

Packages formed by enclosing articles or materials in preformed containers, the containers being mounted on a pallet	B65D 77/061
Flexible intermediate bulk containers	B65D 88/1612
With rigid end walls	B65D 88/20
Flexible liners	B65D 90/046

B65D 90/22

Safety features (floating covers B65D 88/34; arrangements of indicating or measuring devices B65D 90/48; fire-fighting A62C)

References relevant to classification in this group

This subclass/group does not cover:

Anti theft means	B65D 2211/00

Blasting resistant	B65D 90/325
Buoyancy for containers	B65D 88/78
For tank container on a truck	B60P 3/229
Temperature monitoring	G01K 3/005, G01K 13/10, G05D 23/00
Fire alarms	G08B 17/00

Special rules of classification within this group

The use of available Indexing Codes is mandatory.

B65D 90/24

Spillage-retaining means, e.g. recovery ponds

Definition statement

This subclass/group covers:
Illustrative example of subject matter classified in this group:

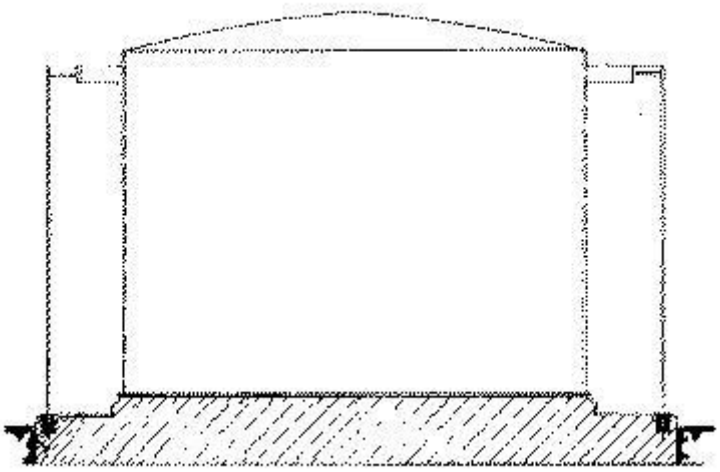

References relevant to classification in this group

This subclass/group does not cover:

Petrol stations	**B67D5/32B**

Drip trays	F16N 31/006

Informative references

Attention is drawn to the following places, which may be of interest for search:

Docking stations, i.e. for the trans	B65D 90/125

Special rules of classification within this group

The use of available Indexing Codes is mandatory.

B65D 90/26

Overfill prevention (spillage retaining means B65D 90/24; arrangements of indicating or measuring devices B65D 90/48)

Definition statement

This subclass/group covers:

Illustrative example of subject matter classified in this group:

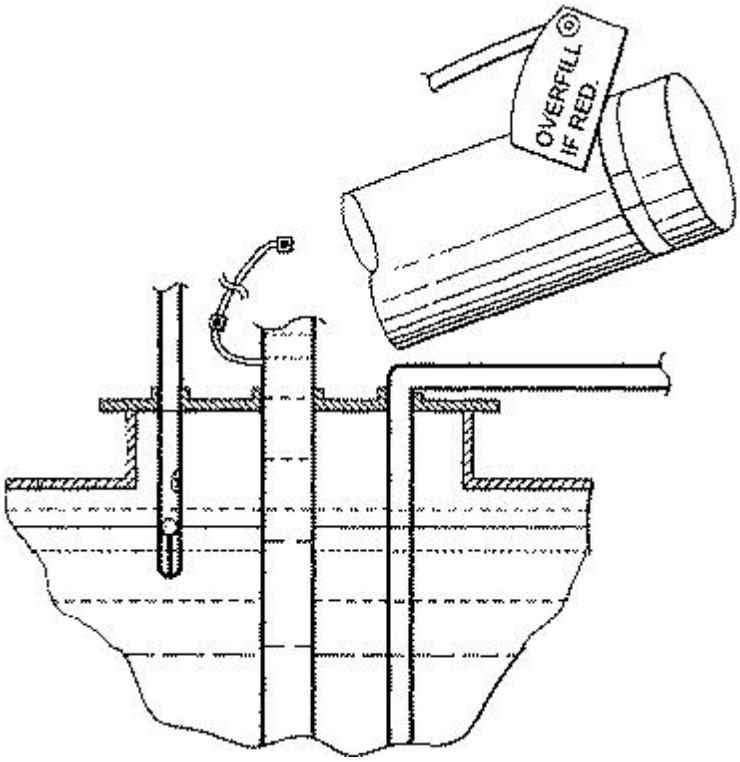

B65D 90/32

Arrangements for preventing, or minimising the effect of, excessive or insufficient pressure (valves per se F16K)

Definition statement

This subclass/group covers:

Illustrative example of subject matter classified in this group:

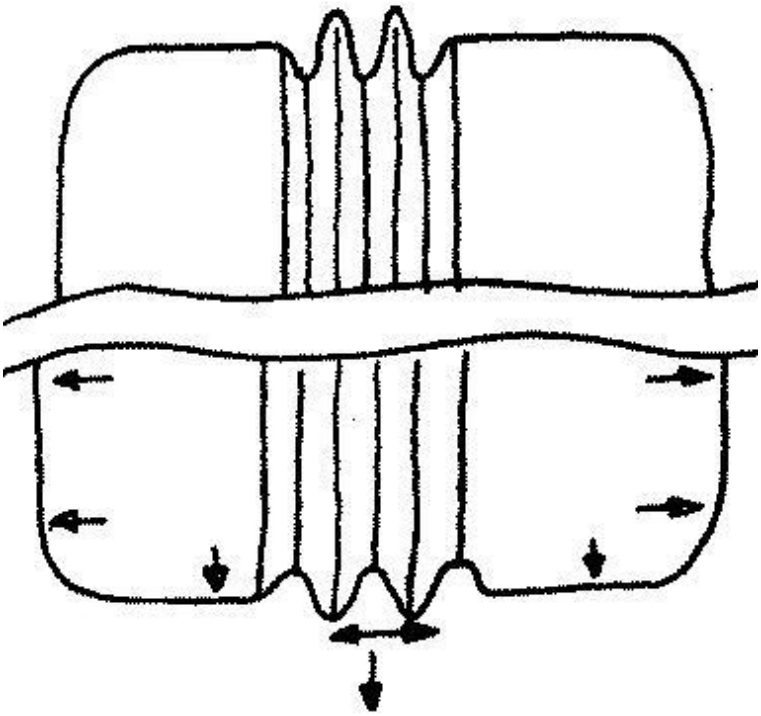

Informative references

Attention is drawn to the following places, which may be of interest for search:

Venting means	B65D 90/34

B65D 90/34

Venting means (vehicle fuel tanks characterised by venting means B60K 15/035)

Definition statement

This subclass/group covers:

Illustrative example of subject matter classified in this group:

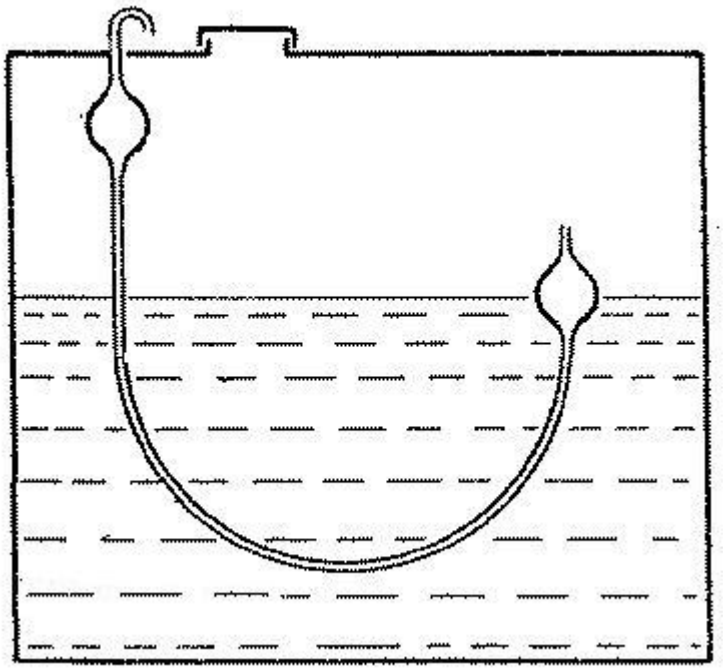

References relevant to classification in this group

This subclass/group does not cover:

Tank vehicles	B60P 3/2255

B65D 90/36

Weakened parts

Definition statement

This subclass/group covers:
Illustrative example of subject matter classified in this group:

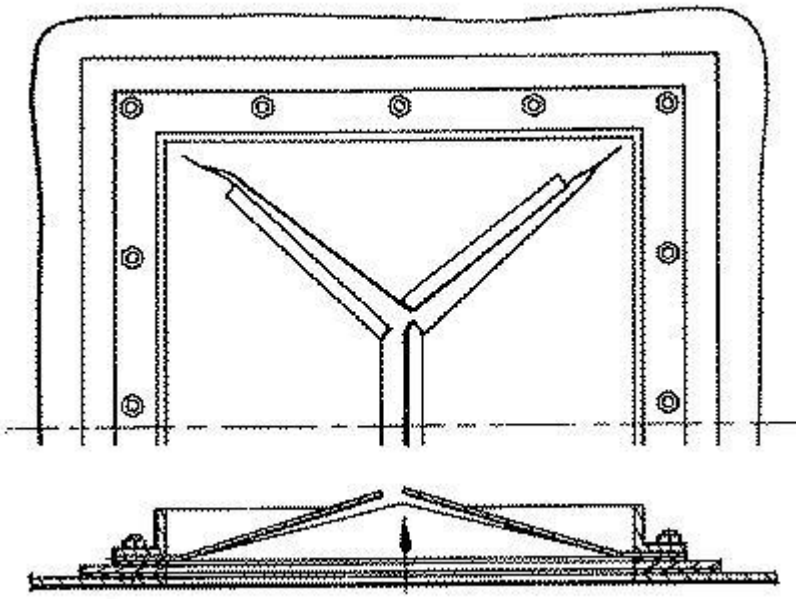

Informative references

Attention is drawn to the following places, which may be of interest for search:

Protection against vibrations or shocks; against mechanical destruction	E04B 1/98
Safety and equalising valves with fracturing diaphragm	F16K 17/16

B65D 90/38

Means for reducing the vapour space or for reducing the formation of vapour within containers

Definition statement

This subclass/group covers:

Illustrative example of subject matter classified in this group:

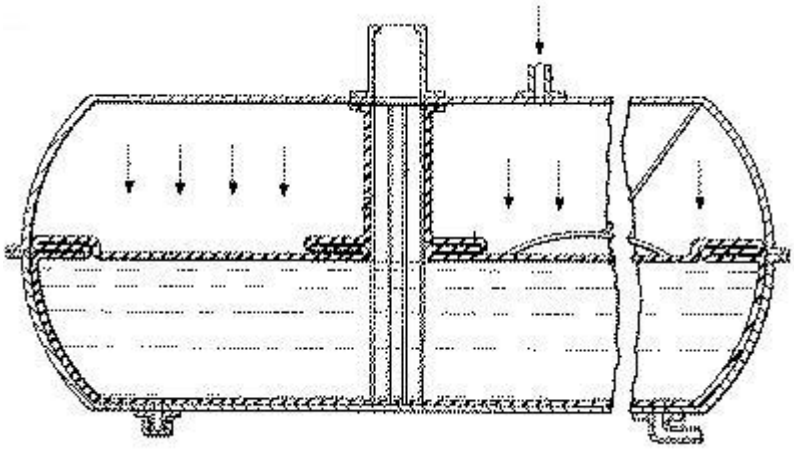

References relevant to classification in this group

This subclass/group does not cover:

Floating covers	B65D 88/34

B65D 90/42

by use of particular materials for covering surface of liquids

Informative references

Attention is drawn to the following places, which may be of interest for search:

Having floating covers with relatively movable sections	B65D 88/36

B65D 90/46

Arrangements for carrying off, or preventing the formation of electrostatic charges (carrying-off, or preventing the formation of electrostatic charges in general H05F)

Definition statement

This subclass/group covers:

Illustrative example of subject matter classified in this group:

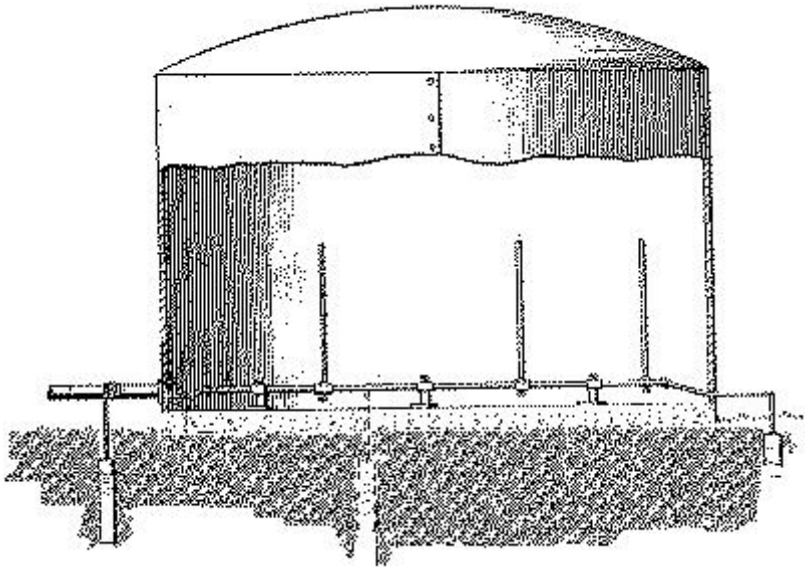

References relevant to classification in this group

This subclass/group does not cover:

Automobile tanks	B60K 15/00
Tank vehicles	B60P 3/2275
Flexible containers	B65D 88/165
Taps	**B67D5/32E**
Arrangements for measuring phase angle between a voltage and a current, or between voltages or currents	G01R 25/00
Preventing the formation of electrostatic charges	H05F 1/00
Carrying-off electrostatic charges	H05F 3/00
Small containers	B65D 2213/02

B65D 90/48

Arrangements of indicating or measuring devices

References relevant to classification in this group

This subclass/group does not cover:

Investigating fluid tightness of structures in petrol station	**B67D5/32B**
Indicating or measuring liquid level	G01F 22/00

B65D 90/50

of leakage-indicating devices (investigating fluid-tightness of structures G01M 3/00)

References relevant to classification in this group

This subclass/group does not cover:

Repair kit	B65D 90/00, B65D 90/22

Informative references

Attention is drawn to the following places, which may be of interest for search:

Spillage-retaining means	B65D 90/24

B65D 90/501

[N: comprising hollow spaces within walls]

Definition statement

This subclass/group covers:

Illustrative example of subject matter classified in this group (CH517630).

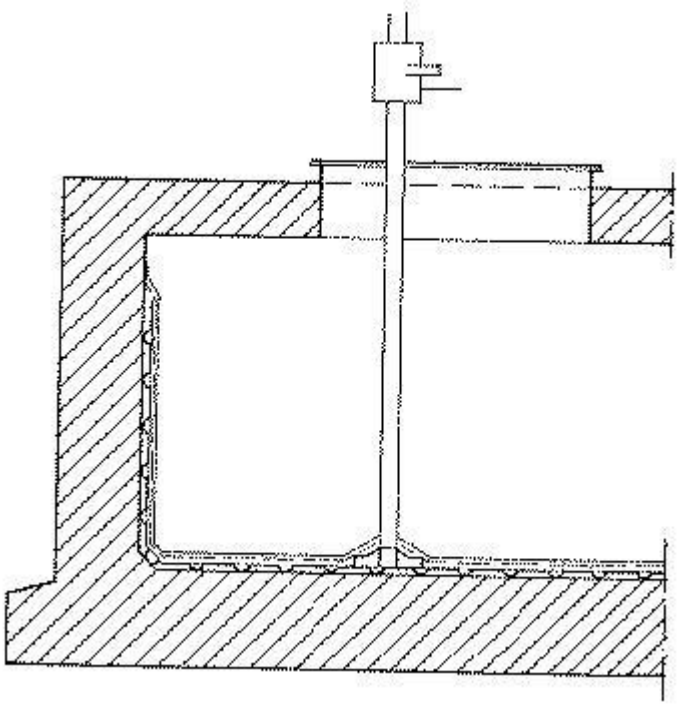

References relevant to classification in this group

This subclass/group does not cover:

Hollow walls construction	B65D 90/028

B65D 90/505

[N: comprising porous spaces or layers in walls]

Definition statement

This subclass/group covers:
Illustrative example of subject matter classified in this group:

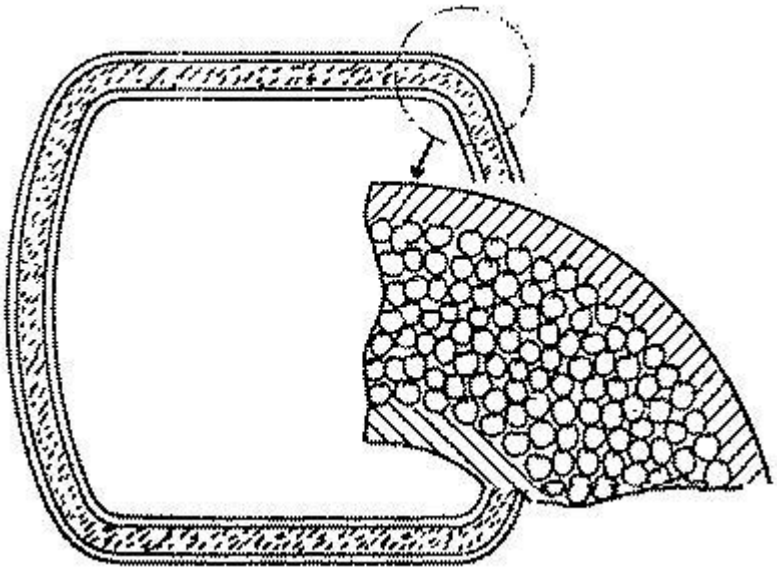

B65D 90/52

Anti-slosh devices (vehicle fuel tanks with means modifying or controlling distribution or motion of fuel, e.g. to prevent noise, surge, splash or fuel starvation B60K 15/077)

Definition statement

This subclass/group covers:

Illustrative example of subject matter classified in this group:

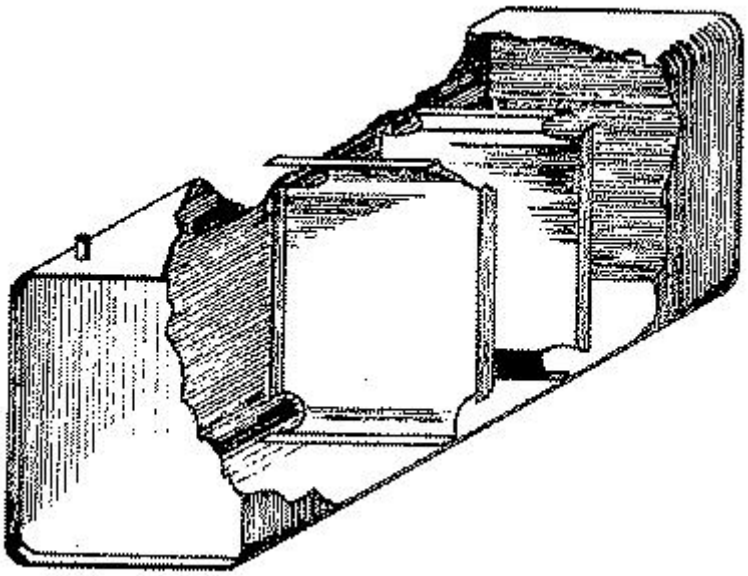

References relevant to classification in this group

This subclass/group does not cover:

Fuel tank in vehicles	B60K 15/077
Tank vehicles	B60P 3/2235
Partition	B65D 90/004

B65D 90/54

Gates or closures (for manholes B65D 90/10; covers or similar closure members, for pressure vessels in general F16J 13/00; valves per se F16K; [N: doors for containers B65D 90/008])

References relevant to classification in this group

This subclass/group does not cover:

Receptacle closures, covers or doors; Mechanisms for operating them	B01F 15/00779
Controlling the operation of apparatus for producing mixtures of clay or cement with other substances; Supplying or proportioning the ingredients for mixing clay or cement with other substances; Discharging the mixture	B28C 7/00
Vehicles predominantly for transporting loads and modified to facilitate loading, consolidating the load, or unloading (the load-transporting element having bottom discharging openings	B60P 1/56
Protecting against shocks	B60P 7/16
Nozzles, funnels, or guides (with flow cut-off means) for introducing articles or materials into containers or wrappers	B65B 39/001
Hopper for concrete including closures	E04G 21/025
Locking or latching means	E05B, E05C

Covers or similar closure members for pressure vessels in general	F16J 13/00
Means for automatically discharging weigh receptacles by valves or flaps in the container bottom	G01G 13/18
Pallet	B65D 2519/00805

Special rules of classification within this group

The use of available Indexing Codes is mandatory.

B65D 90/545

[N: Discharge end caps]

Definition statement

This subclass/group covers:
Illustrative example of subject matter classified in this group:

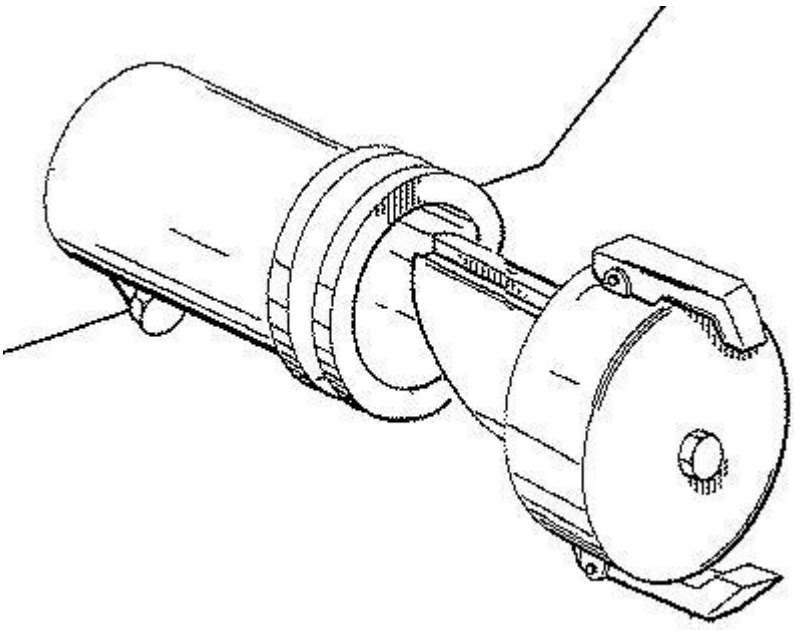

Special rules of classification within this group

The use of available Indexing Codes is mandatory.

B65D 90/56

operating by deformation of flexible walls [N: B65D 90/58 takes precedence]

Definition statement

This subclass/group covers:

Illustrative example of subject matter classified in this group:

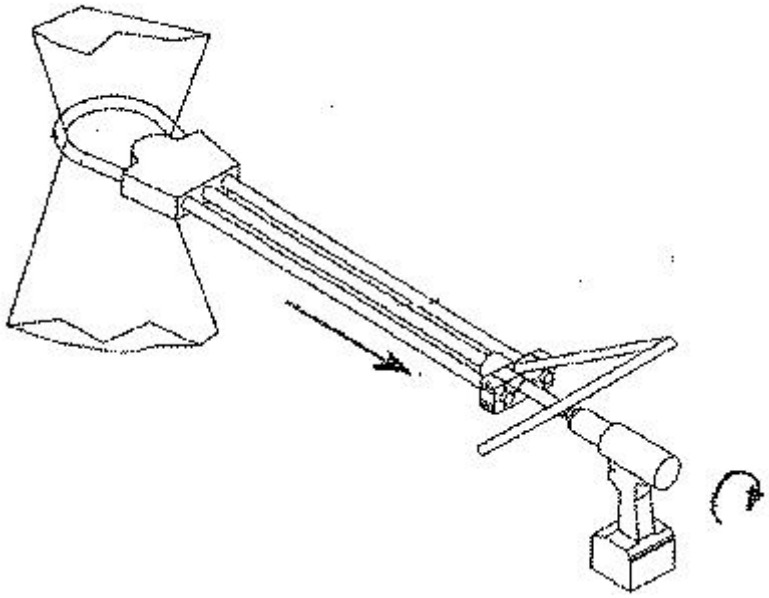

References relevant to classification in this group

This subclass/group does not cover:

Having closure members sliding in the plane of the opening	B65D 90/58
Having closure members sliding in the plane of the opening	B65D 90/62

Informative references

Attention is drawn to the following places, which may be of interest for search:

Closures for top or bottom openings	B65D 88/1668

Special rules of classification within this group

The use of available Indexing Codes is mandatory.

B65D 90/58

having closure members sliding in the plane of the opening

Informative references

Attention is drawn to the following places, which may be of interest for search:

Construction of housing of cutting-off parts of tanks	F16K 27/07

Special rules of classification within this group

The use of available Indexing Codes is mandatory.

B65D 90/582

[N: having a rotational motion]

Definition statement

This subclass/group covers:
Illustrative example of subject matter classified in this group:

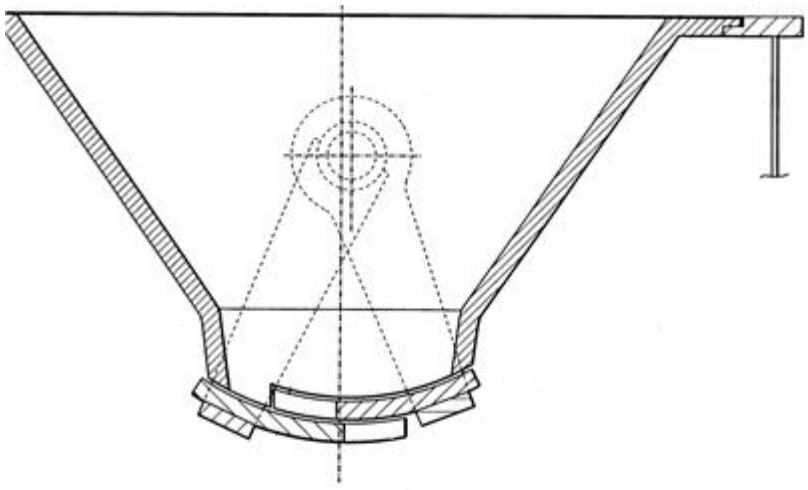

Special rules of classification within this group

The use of available Indexing Codes is mandatory.

B65D 90/585

[N: around an axis perpendicular to the valve port]

Definition statement

This subclass/group covers:
Illustrative example of subject matter classified in this group:

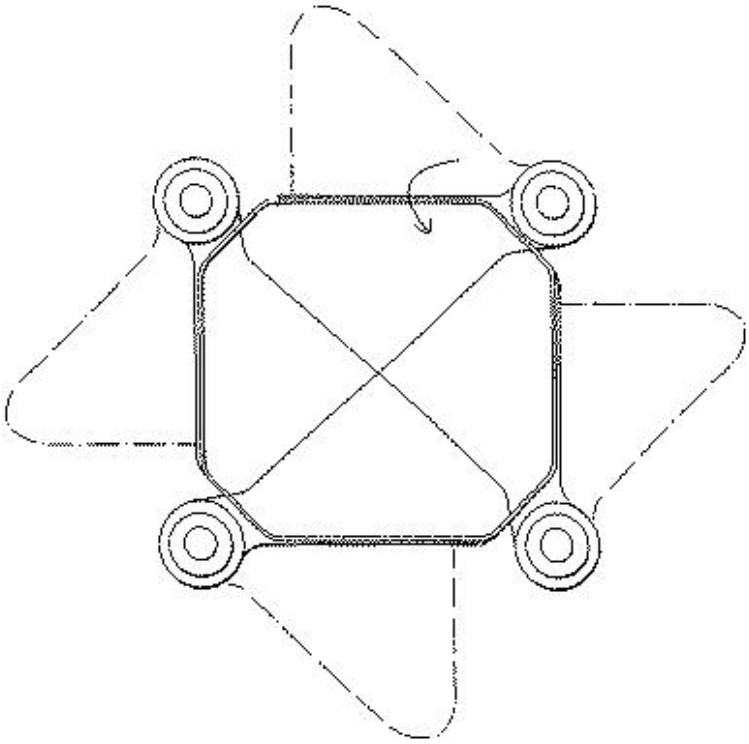

Special rules of classification within this group

The use of available Indexing Codes is mandatory.

B65D 90/587

[N: having a linear motion]

Definition statement

This subclass/group covers:
Illustrative example of subject matter classified in this group:

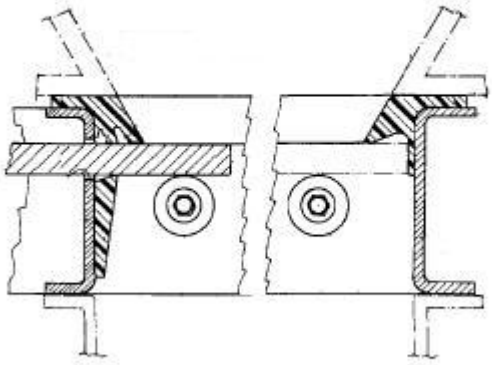

B65D 90/60

and having one or more openings

Definition statement

This subclass/group covers:

Illustrative example of subject matter classified in this group:

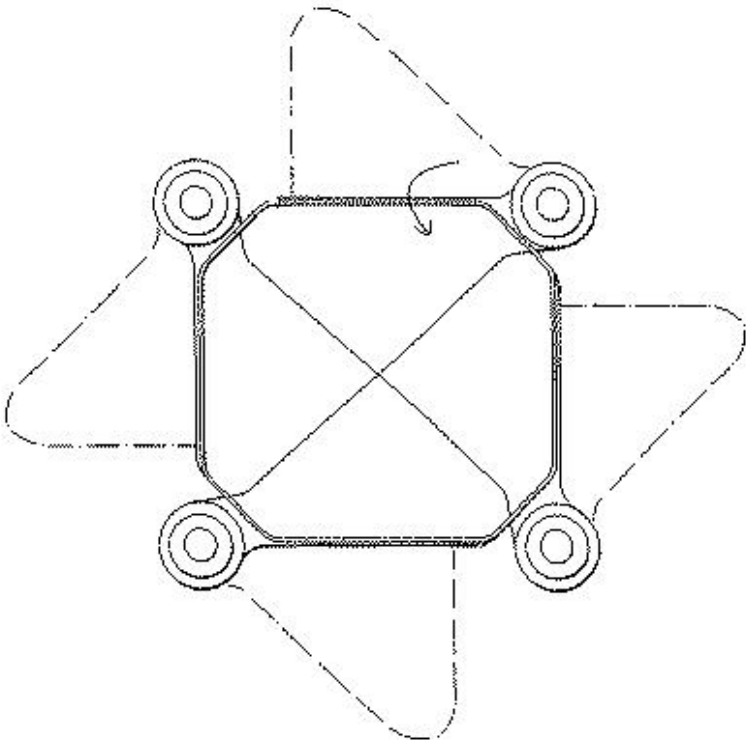

Informative references

Attention is drawn to the following places, which may be of interest for search:

Auxiliary measures taken, or devices used, in connection with loading or unloading: preventing escape of dust with co-operating closure members on each of the parts of a separable transfer channel	B65G 69/183

Special rules of classification within this group

Indexing Code B65D 2590/547 can also be used.

The use of available Indexing Codes is mandatory.

B65D 90/62

having closure members movable out of the plane of the opening

Informative references

Attention is drawn to the following places, which may be of interest for search:

Of cutting-off parts of tanks	F16K 27/07

Special rules of classification within this group

The use of available Indexing Codes is mandatory.

B65D 90/623

[N: having a rotational motion]

Definition statement

This subclass/group covers:
Illustrative examples of subject matter classified in this group:

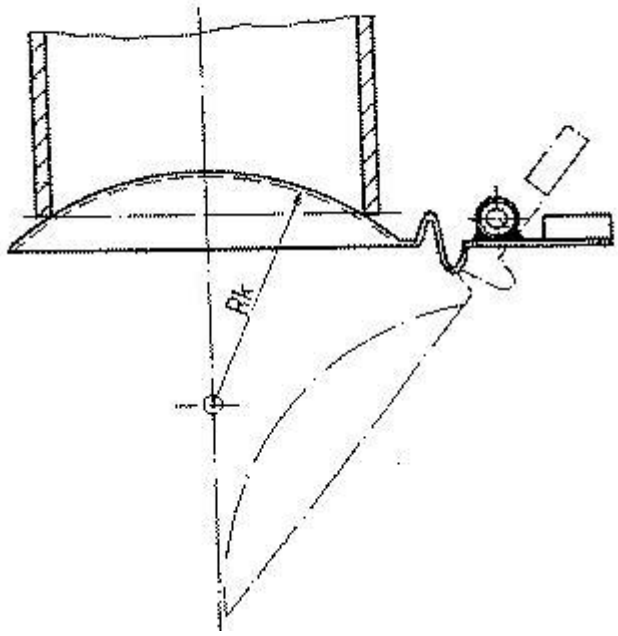

Informative references

Attention is drawn to the following places, which may be of interest for search:

By displacement of walls	**B65G88/58**

Special rules of classification within this group

The use of available Indexing Codes is mandatory.

B65D 90/626

[N: having a linear motion]

Definition statement

This subclass/group covers:
Illustrative example of subject matter classified in this group:

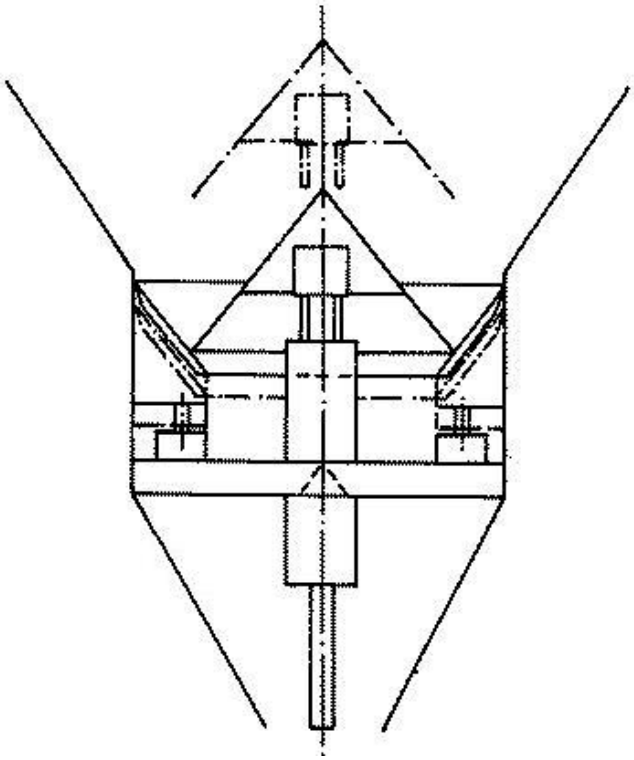

Special rules of classification within this group

The use of available Indexing Codes is mandatory.

B65D 90/64

having multipart closure members, the parts being brought into closing position one by one according to need

Definition statement

This subclass/group covers:

Illustrative examples of subject matter classified in this group:

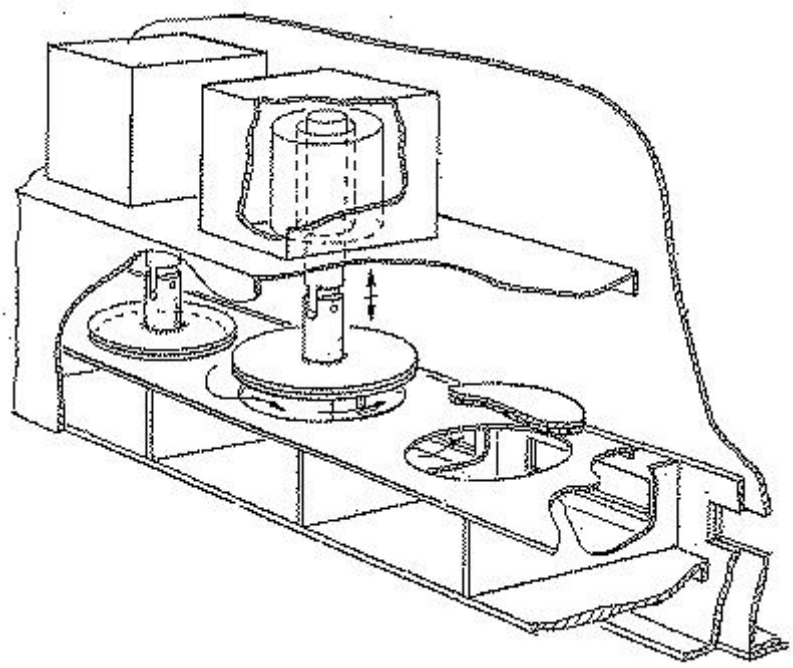

Informative references

Attention is drawn to the following places, which may be of interest for search:

Preventing escape of dust with co-operating closure members on each of the parts of a separable transfer channel	B65G 69/183

Special rules of classification within this group

Indexing Code B65D 2590/547 can also be used.

The use of available Indexing Codes is mandatory.

B65D 90/66

Operating devices therefor

Special rules of classification within this group

Always classify the movement of the gate, e.g. B65D 90/58 or B65D 90/62.

The use of available Indexing Codes is mandatory.

B65D 2101/00

Tamper-indicating means (relating to aerosol containers

L65D83/14Y2)

References relevant to classification in this group

This subclass/group does not cover:

Anti-theft means	B65D 2211/00
Relating to aerosol containers	**L65D83/14Y2**

Informative references

Attention is drawn to the following places, which may be of interest for search:

Closures with special means for indicating unauthorised opening	B65D 27/30
End- or aperture-closing arrangements or devices with special means for indicating unauthorised opening	B65D 33/34
Caps or cap-like covers with lines of weakness, tearing-strips, tags, or like opening or removal devices	B65D 41/32
Arrangements or devices for preventing refilling of containers	B65D 49/00
Locking devices; Means for discouraging or indicating unauthorised opening or removal of closure	B65D 55/02

B65D 2101/0007

Tearable non-integral strips

Informative references

Attention is drawn to the following places, which may be of interest for search:

Non-integral frangible members applied to, or inserted in, a preformed opening	B65D 17/50

B65D 2101/0015

Tearable part of the container (B65D 2101/0092 takes precedence)

References relevant to classification in this group

This subclass/group does not cover:

If combined with tearable part of the closure	B65D 2101/0092

B65D 2101/0023

Tearable part of the closure (B65D 2101/0092 takes precedence)

References relevant to classification in this group

This subclass/group does not cover:

If combined with tearable part of the closure	B65D 2101/0092

Informative references

Attention is drawn to the following places, which may be of interest for search:

Closures in which a part has to be ruptured to gain access to the contents	B65D 55/024

B65D 2101/003

Frangible elements completely enclosed in closure skirt (tear-off strips B65D 2101/0038)

References relevant to classification in this group

This subclass/group does not cover:

Tear-off strips	B65D 2101/0038

Informative references

Attention is drawn to the following places, which may be of interest for search:

Annular elements encircling container necks	B65D 55/08

B65D 2101/0092

Tearable part both of the container and of the closure

References relevant to classification in this group

This subclass/group does not cover:

Tearable part of the container or of the closure	B65D 2101/0015, B65D 2101/0023

B65D 2201/00

Means or constructions for testing or controlling the contents

Informative references

Attention is drawn to the following places, which may be of interest for search:

Wrappers or flexible covers with provision for excluding or admitting light with some areas transparent and others opaque	B65D 65/18
Packages comprising articles or materials partially or wholly enclosed in strips, sheets, blanks, tubes, or webs of flexible sheet material with inspection openings or windows	B65D 75/522

B65D 2203/00

Decoration means, markings, information elements, contents indicators (see also B65D 5/4212, B65D 33/004)

Informative references

Attention is drawn to the following places, which may be of interest for search:

Containers of polygonal cross-section with information or decoration elements	B65D 5/4212
Details of, or accessories for, sacks or bags, information or decoration elements	B65D 33/004

B65D 2203/10

Transponders

References relevant to classification in this group

This subclass/group does not cover:

Use of RFID in labelling machines	B65C 2009/0003

B65D 2205/00

Venting means

Informative references

Attention is drawn to the following places, which may be of interest for search:

Ventilating arrangements	B65D 5/4295
Ventilation or drainage of bags	B65D 33/01
Closures with discharging devices other than pumps with means for venting	B65D 47/32
Closures with means for venting air or gas	B65D 51/16
Pressure relief-valves incorporated in a container wall	B65D 77/225

B65D 2205/02

Venting holes

References relevant to classification in this group

This subclass/group does not cover:

Special constructions	B65D 51/1611

B65D 2207/00

Standing packages

Informative references

Attention is drawn to the following places, which may be of interest for search:

Standing pouches	B65D 75/008

B65D 2209/00

Provisions for used articles

References relevant to classification in this group

This subclass/group does not cover:

Casings for collecting used medical articles	A61B 19/0287
For dispensers of thin flat articles in succession	B65D 83/0888

B65D 2211/00

Anti-theft means

References relevant to classification in this group

This subclass/group does not cover:

Anti-theft devices, e.g. tags or monitors, fixed to articles	E05B 73/0017

Theft detection systems using tags	G08B 13/2402

Informative references

Attention is drawn to the following places, which may be of interest for search:

Tamper-indicating means	B65D 2101/00

B65D 2213/02

Means for preventing build-up of electrostatic charges

References relevant to classification in this group

This subclass/group does not cover:

For large containers	B65D 90/46

B65D 2221/00

Small packaging specially adapted for product samples, single-use packages or échantillons

References relevant to classification in this group

This subclass/group does not cover:

Containers having bodies formed in one piece made of flexible material	B65D 1/095

Informative references

Attention is drawn to the following places, which may be of interest for search:

Casings or accessories for storing or handling solid or pasty toilet or cosmetic substancesfor samples	A45D 40/0087
Casings or accessories for storing or handling solid or pasty toilet or cosmetic substancesfor samples	A45D 40/0087

B65D 2231/022

for permitting the insertion of a tubular contents-removing device, e.g. a drinking straw

Definition statement

This subclass/group covers:

Illustrative example of subject matter classified in this group:

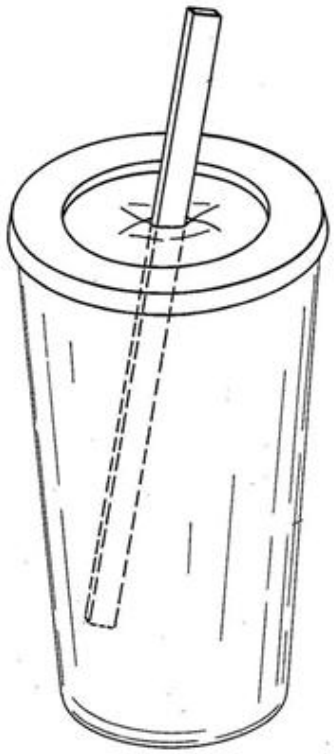

Informative references

Attention is drawn to the following places, which may be of interest for search:

Closures to be pierced by an extracting-device for the contents and fixed on the container by separate retaining means	B65D 51/002

B65D 2231/025

for draining or discharging the liquid contents, e.g. soup, milk

Definition statement

This subclass/group covers:

Illustrative example of subject matter classified in this group:

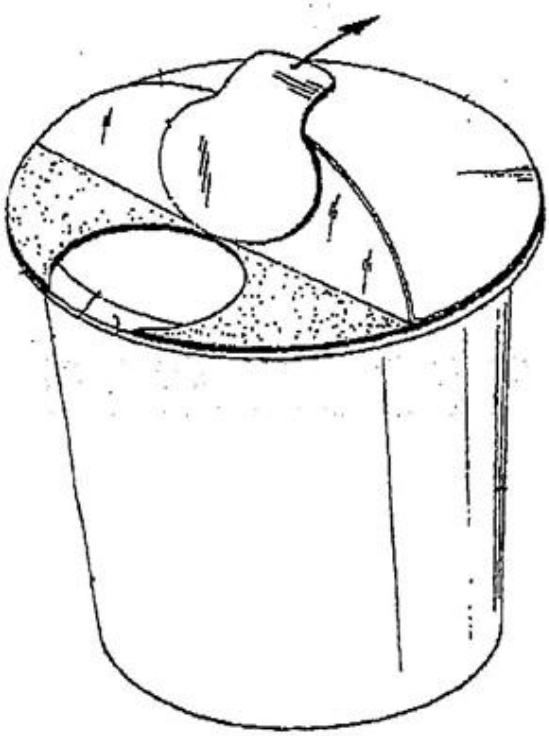

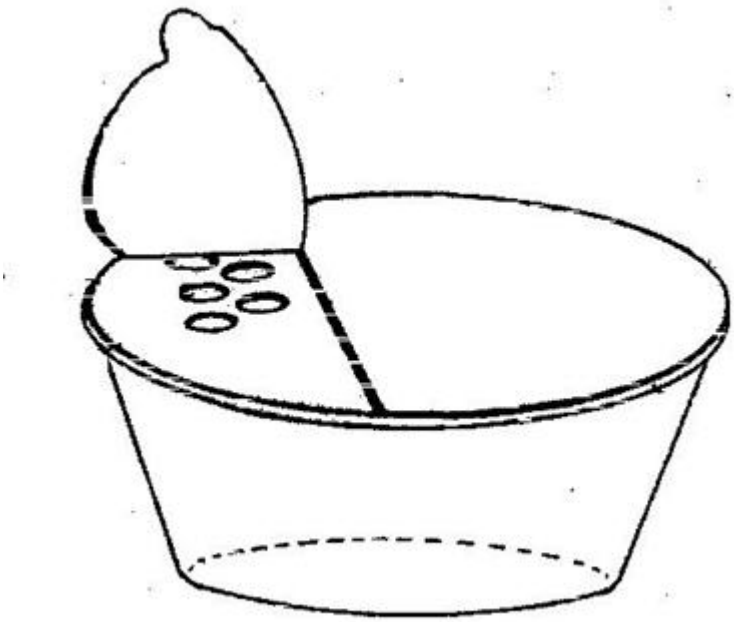

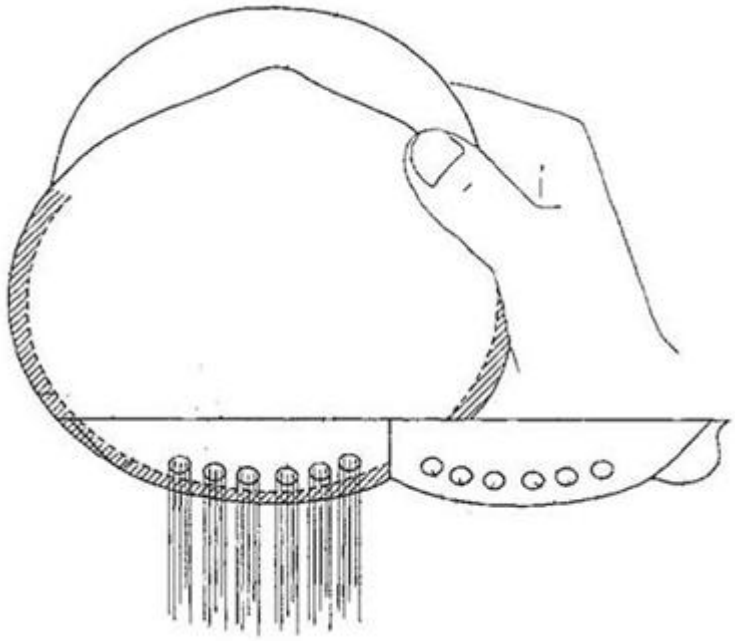

Informative references

Attention is drawn to the following places, which may be of interest for search:

Lines of weakness or apertures in cover	B65D 2577/2091

B65D 2231/027

for discharging a solidified or gelatinous products, e.g. pudding, ice-cream, from the package

Definition statement

This subclass/group covers:

Illustrative example of subject matter classified in this group:

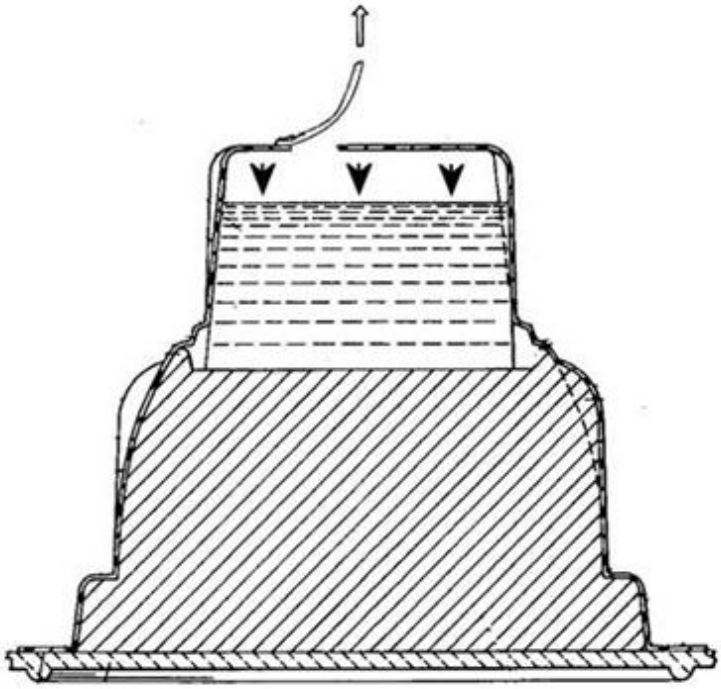

B65D 2251/00

Details relating to container closures (lids or covers for box-like containers B65D 43/00)(see also B65D 43/00)

References relevant to classification in this group

This subclass/group does not cover:

Lids or covers for box-like containers	B65D 2543/00

B65D 2251/0003

Two or more closures

Relationship between large subject matter areas

The B65D 2251/0003 codes are to be used with the B65D 51/18, B65D 51/185 and B65D 51/20 groups.

B65D 2251/01

making a sound upon actuation

Informative references

Attention is drawn to the following places, which may be of interest for search:

Closures, being provided with transient audible or visual signaling means	B65D 51/248

B65D 2251/04

Orienting or positioning means

References relevant to classification in this group

This subclass/group does not cover:

Threaded caps	B65D 41/0471

Informative references

Attention is drawn to the following places, which may be of interest for search:

Orienting or positioning means for containers	B65D 2303/00

B65D 2251/06

Special configurations; Closures simulating or provided with another item, e.g. puppet, animal, vehicle, building (B65D 81/366 takes precedence)

Informative references

Attention is drawn to the following places, which may be of interest for search:

Containers, or parts thereof, simulating or being incorporated into other items, the container closure only being provided with a three dimensional figure	B65D 81/366

B65D 2251/065

the external skirt having a non-circular cross-section, e.g.

square, elliptical

Informative references

Attention is drawn to the following places, which may be of interest for search:

Shape of the outer periphery	B65D 2543/00064

B65D 2251/07

Closures specially adapted for closing bottle-necks of non-circular cross-section

Informative references

Attention is drawn to the following places, which may be of interest for search:

Necks of non-circular cross-section	B65D 2501/009

B65D 2251/08

Closures specially adapted for closing container mouths of differing size or configuration, e.g. screw/snap combination

Informative references

Attention is drawn to the following places, which may be of interest for search:

Multi-position closures	B65D 2543/0025

B65D 2251/1008

Means for locking the closure in open position

Informative references

Attention is drawn to the following places, which may be of interest for search:

Devices for retaining in open position	B65D 43/24

B65D 2251/1016

Means for locking the closure in closed position

References relevant to classification in this group

This subclass/group does not cover:

Tamper-indicating means	B65D 2101/00
Anti-theft means	B65D 2211/00
Child-proof means	B65D 2215/00

Informative references

Attention is drawn to the following places, which may be of interest for search:

Devices for holding in closed position	B65D 43/22

B65D 2251/20

Sealing means

References relevant to classification in this group

This subclass/group does not cover:

For box-like containers	B65D 2543/00953

B65D 2251/205

Inserted

References relevant to classification in this group

This subclass/group does not cover:

For box-like containers	B65D 2543/00962

B65D 2275/02

Sheets wrappers or bags provided with protective or puncture resistant patches, specially adapted for meat on the bone, e.g.

e.g. patch bags

Definition statement

This subclass/group covers:
Illustrative example of subject matter classified in this group:

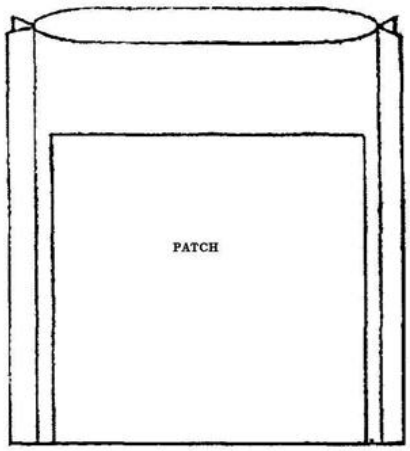

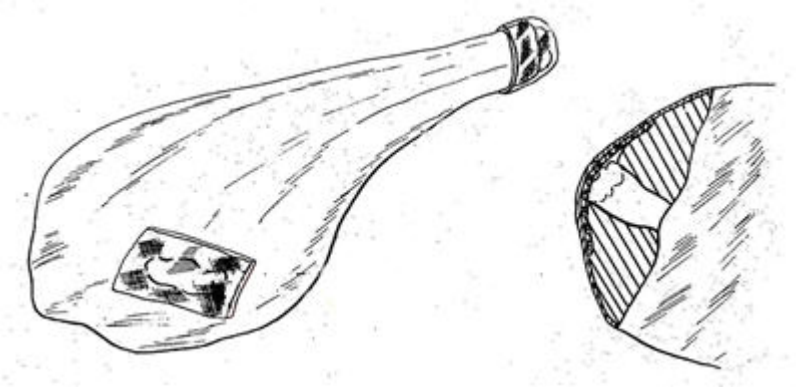

B65D 2301/10

Blanks mutually positioned to minimise waste material upon cutting out the individual blank from a continuous or large sheet

Definition statement

This subclass/group covers:
Illustrative example of subject matter classified in this group:

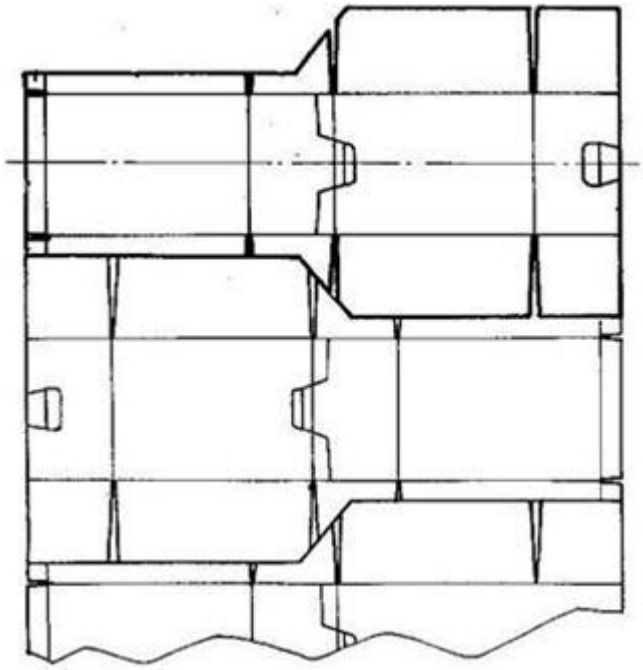

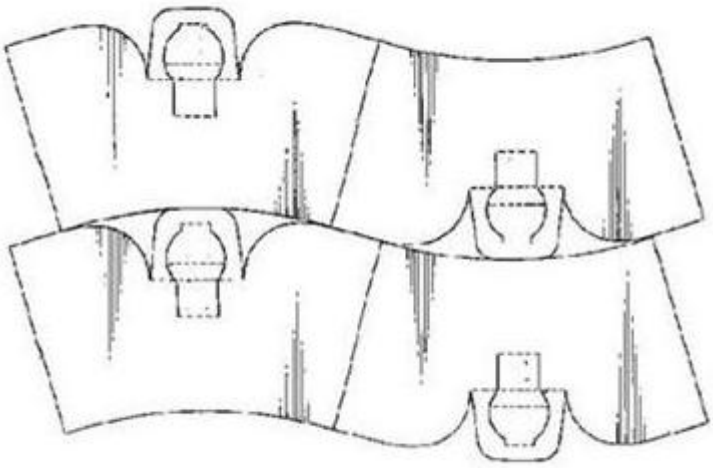

B65D 2303/00

Orienting or positioning means for containers

Definition statement

This subclass/group covers:

Illustrative example of subject matter classified in this group:

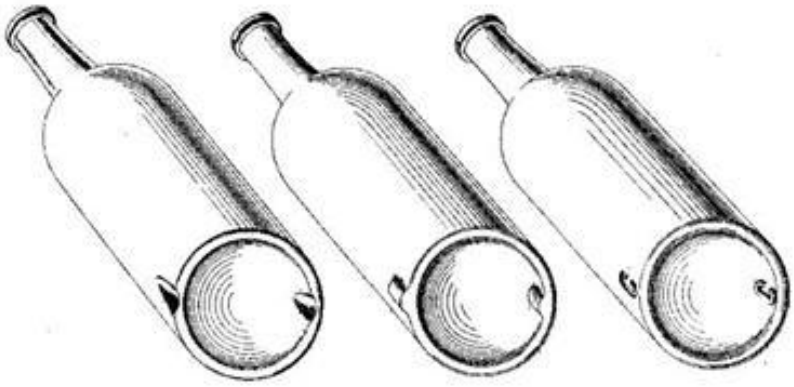

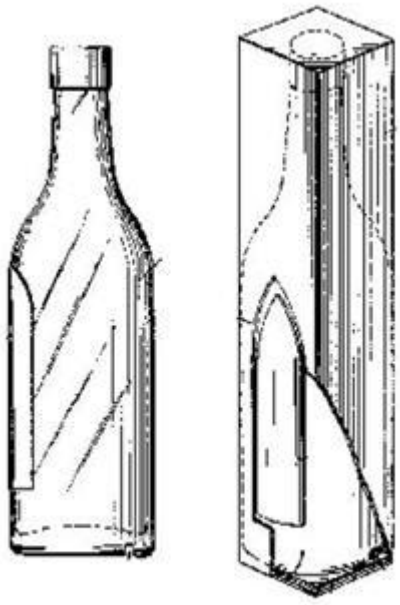

Informative references

Attention is drawn to the following places, which may be of interest for search:

Orienting or positioning means	B65D 2251/04

B65D 2313/02

of hook-and-loop type

Definition statement

This subclass/group covers:
Illustrative example of subject matter classified in this group:

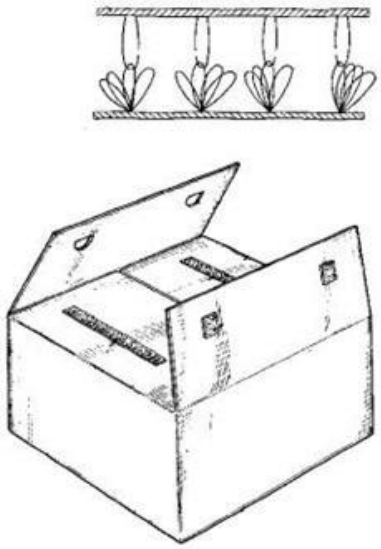

B65D 2313/04

of magnetic type

Definition statement

This subclass/group covers:
Illustrative example of subject matter classified in this group:

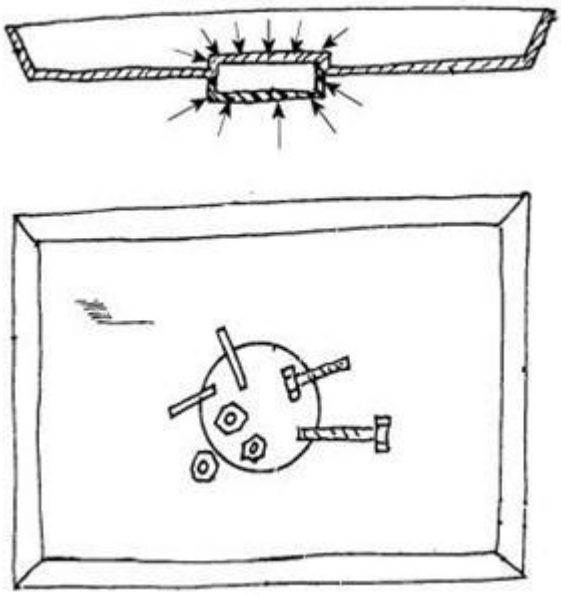

References relevant to classification in this group

This subclass/group does not cover:

Magnetic connections for lids or covers	B65D 77/20

B65D 2313/06

using vacuum suction cups

Definition statement

This subclass/group covers:
Illustrative example of subject matter classified in this group:

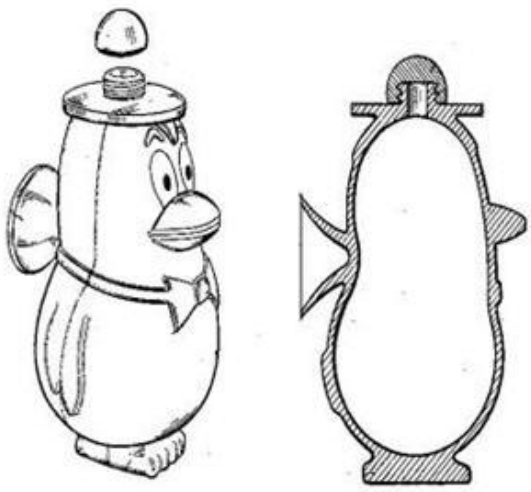

References relevant to classification in this group

This subclass/group does not cover:

Suction cups for attaching purposes	F16B 47/00

B65D 2313/08

Double sided adhesive tape, e.g. for suspension of the container (B65D 2313/10 takes precedence)

Definition statement

This subclass/group covers:
Illustrative example of subject matter classified in this group:

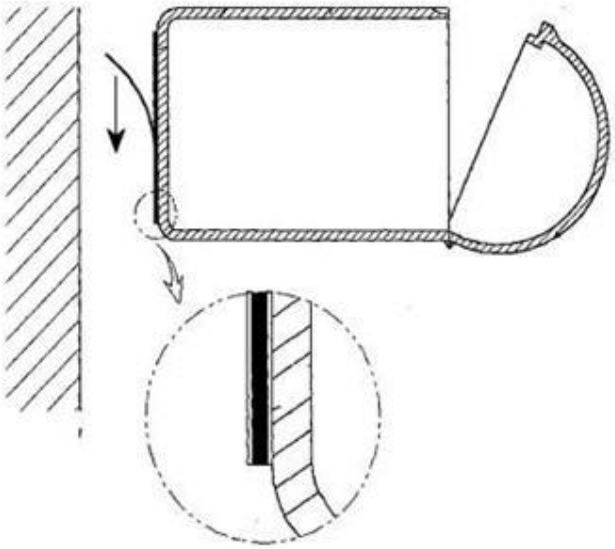

Informative references

Attention is drawn to the following places, which may be of interest for search:

Adhesive tapes	B65D 63/1009

B65D 2313/10

Adhesive or cohesive means for holding the contents attached to the container

Informative references

Attention is drawn to the following places, which may be of interest for search:

Packaging elements adhered to the articles	B65D 71/0085
Locating elements for the contents the articles being glued to the wrapper	B65D 2571/00327

B65D 2501/0018

Ribs

Definition statement

This subclass/group covers:
Illustrative example of subject matter classified in this group:

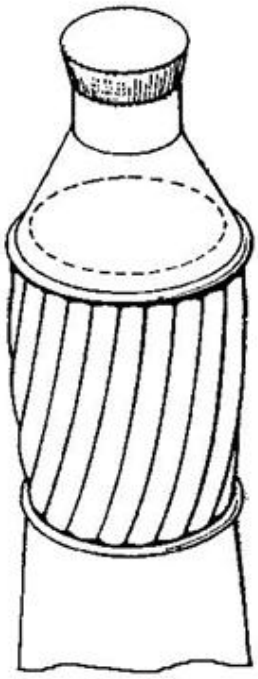

B65D 2501/0027

Hollow longitudinal ribs

Definition statement

This subclass/group covers:
Illustrative example of subject matter classified in this group:

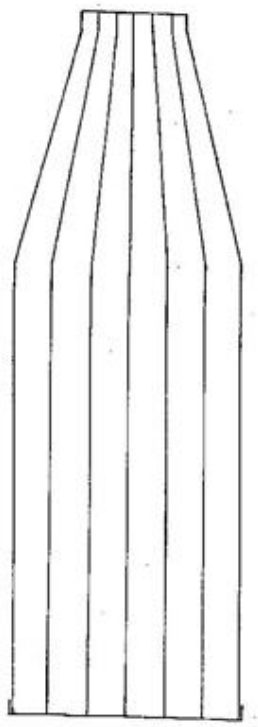

B65D 2501/0036

Hollow circonferential ribs

Definition statement

This subclass/group covers:
Illustrative example of subject matter classified in this group:

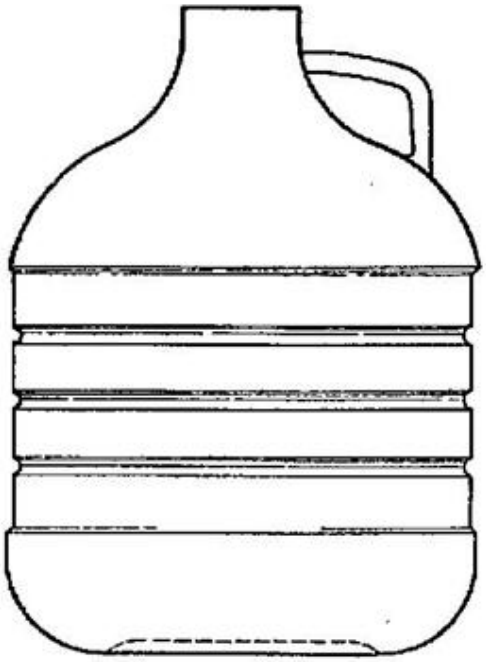

B65D 2501/0045

Solid ribs

Definition statement

This subclass/group covers:

Illustrative example of subject matter classified in this group:

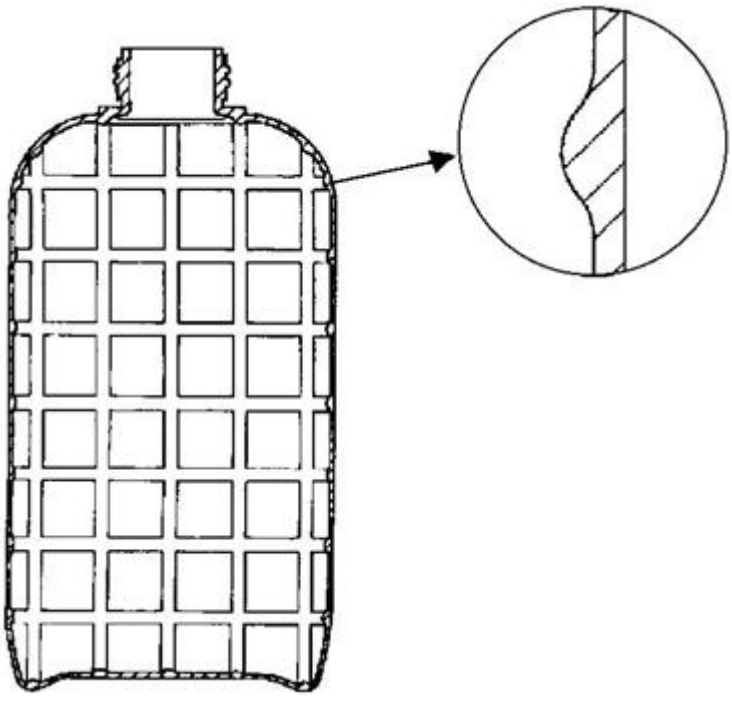

B65D 2501/0054

Lines of weakness

Definition statement

This subclass/group covers:
Illustrative example of subject matter classified in this group:

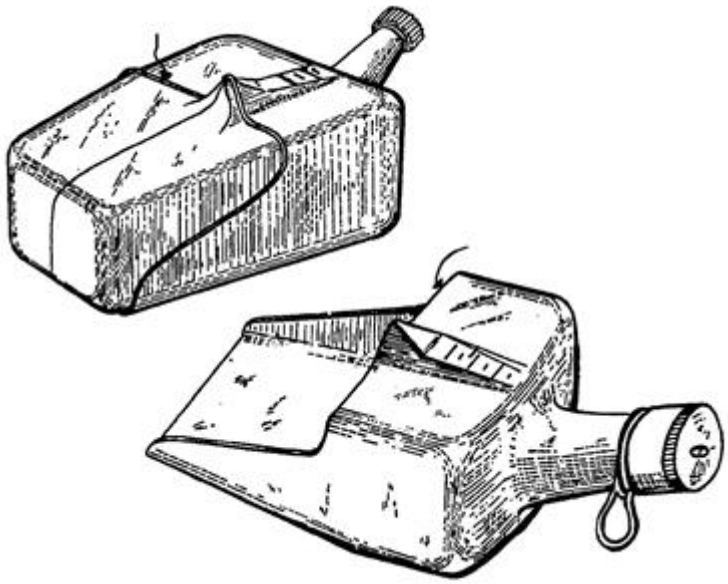

B65D 2501/0063

Additional discharging means (B65D 1/06 takes precedence)

Definition statement

This subclass/group covers:
Illustrative example of subject matter classified in this group:

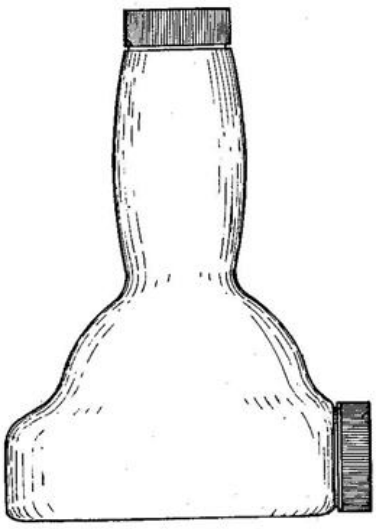

References relevant to classification in this group

This subclass/group does not cover:

Bottles or similar containers with necks or like restricted apertures, designed for pouring contents with closable apertures at bottom	B65D 1/06

B65D 2501/0072

Means for facilitating filling of the bottle

Definition statement

This subclass/group covers:

Illustrative example of subject matter classified in this group:

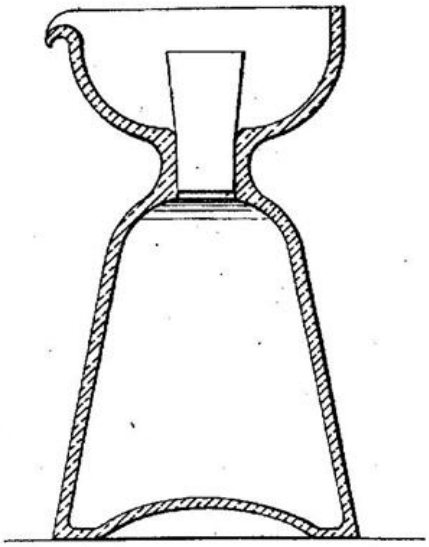

B65D 2501/0081

Bottles of non-circular cross-section

Definition statement

This subclass/group covers:
Illustrative example of subject matter classified in this group:

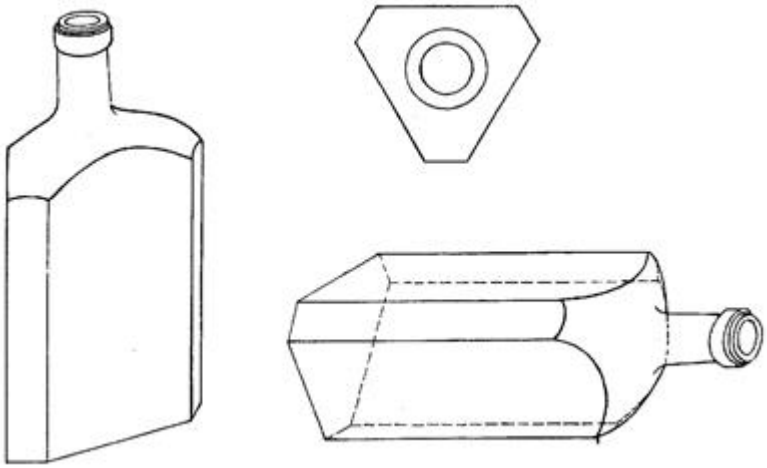

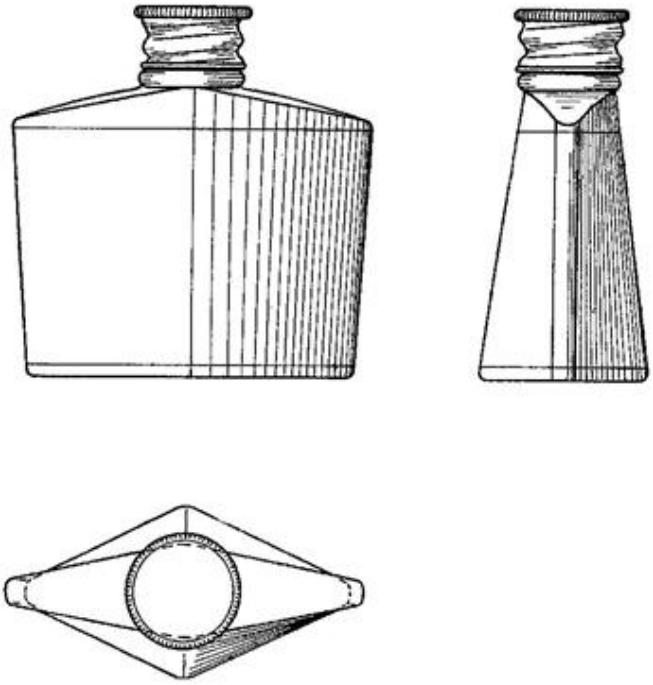

B65D 2501/009

Necks of non-circular cross-section

Definition statement

This subclass/group covers:
Illustrative example of subject matter classified in this group:

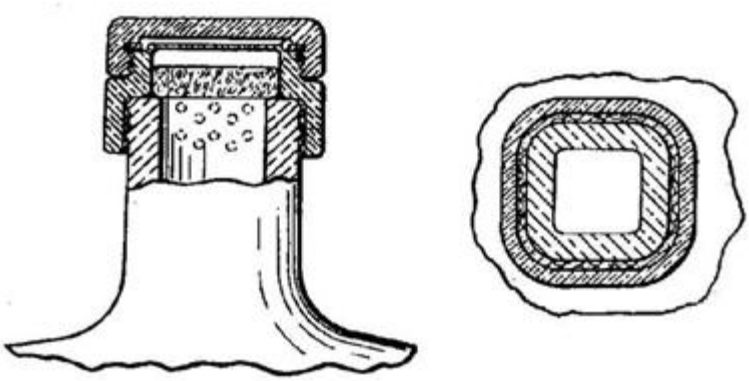

Informative references

Attention is drawn to the following places, which may be of interest for search:

Closures specially adapted for closing bottle-necks of non-circular	B65D 2251/07

cross-section	

B65D 2501/24363

Handles

Informative references

Attention is drawn to the following places, which may be of interest for search:

Handles	B65D 25/28

B65D 2501/2491

Transponders

Informative references

Attention is drawn to the following places, which may be of interest for search:

Transponders	B65D 2203/10

B65D 2517/0005

and also in top wall

Definition statement

This subclass/group covers:
Illustrative example of subject matter classified in this group:

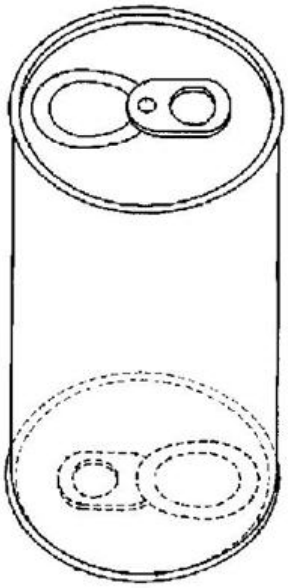

B65D 2517/0007

in a separate cover

Definition statement

This subclass/group covers:
Illustrative example of subject matter classified in this group:

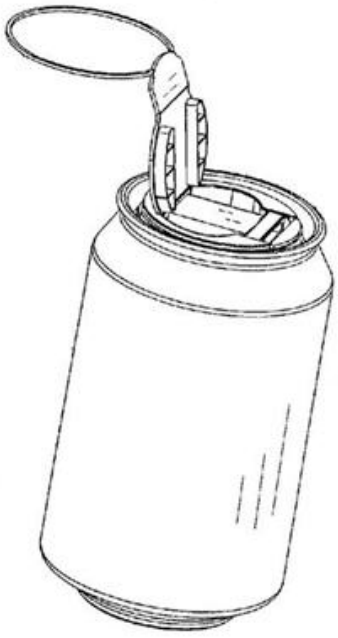

Informative references

Attention is drawn to the following places, which may be of interest for search:

Caps	B65D 41/00-
Lids or covers for rigid or semi-rigid containers	B65D 43/00-
Closures not otherwise provided for	B65D 51/00-

B65D 2517/0008

in side wall

Definition statement

This subclass/group covers:
Illustrative example of subject matter classified in this group:

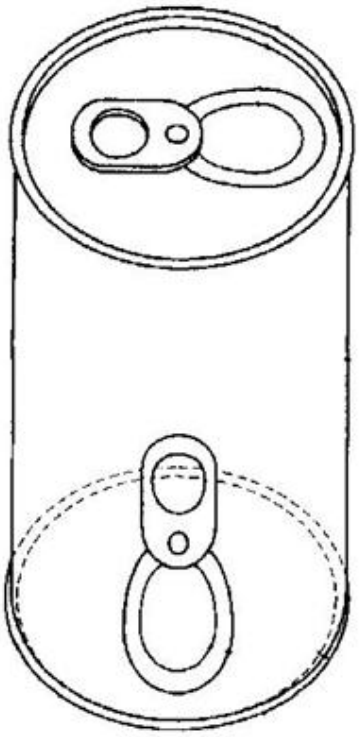

B65D 2517/0011

push-down tear panel

Definition statement

This subclass/group covers:
Illustrative example of subject matter classified in this group:

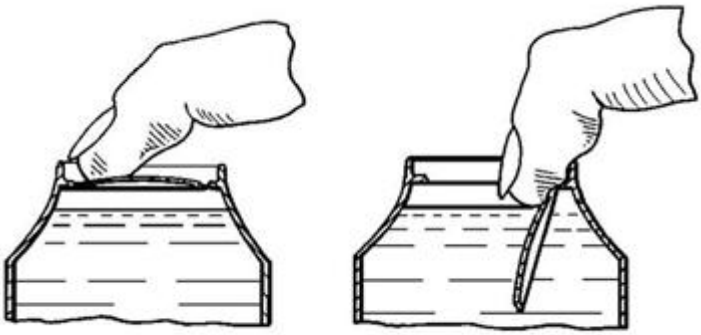

B65D 2517/0013

pull-out tear panel, e.g. by means of a tear-tab

Definition statement

This subclass/group covers:
Illustrative example of subject matter classified in this group:

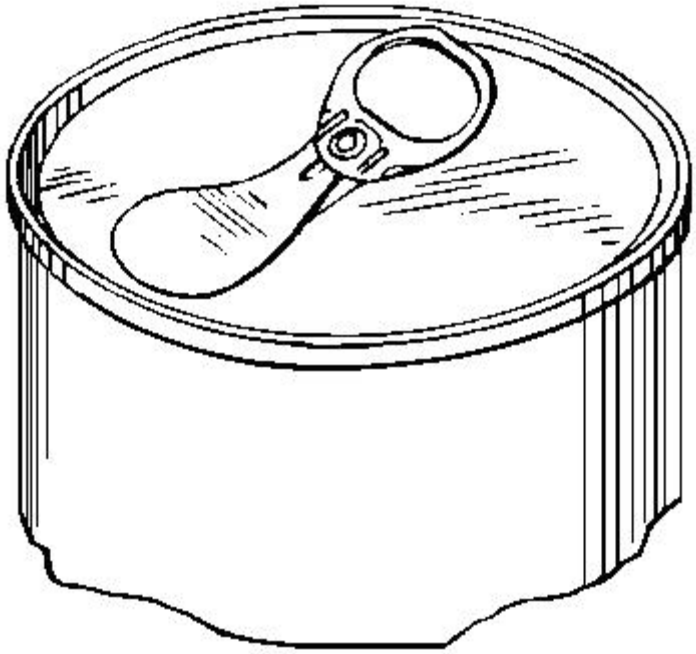

B65D 2517/0014

pivot tab and push-down tear panel

Definition statement

This subclass/group covers:
Illustrative example of subject matter classified in this group:

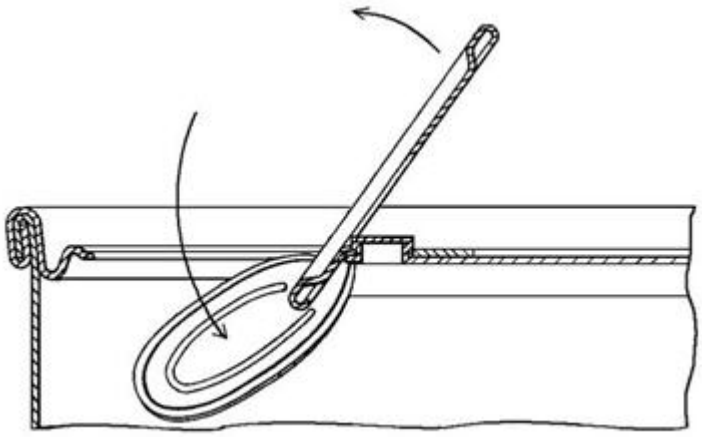

B65D 2517/0016

pivot tab, push-down and pull-out tear panel

Definition statement

This subclass/group covers:
Illustrative example of subject matter classified in this group:

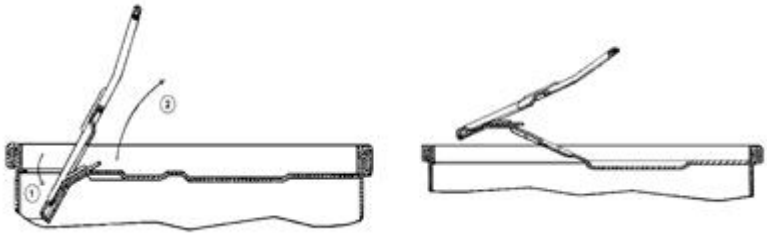

B65D 2517/0017

linearly sliding tear panel

Definition statement

This subclass/group covers:
Illustrative example of subject matter classified in this group:

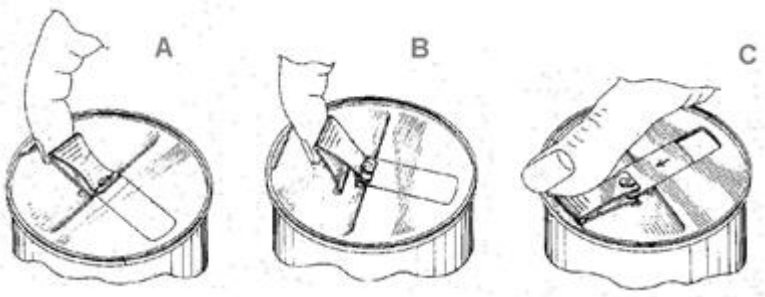

Informative references

Attention is drawn to the following places, which may be of interest for search:

Reclosable openings, the tab and torn out panel together closing the opening	B65D 2517/0035

B65D 2517/0019

Tear panel rolled about the tab

Definition statement

This subclass/group covers:

Illustrative example of subject matter classified in this group:

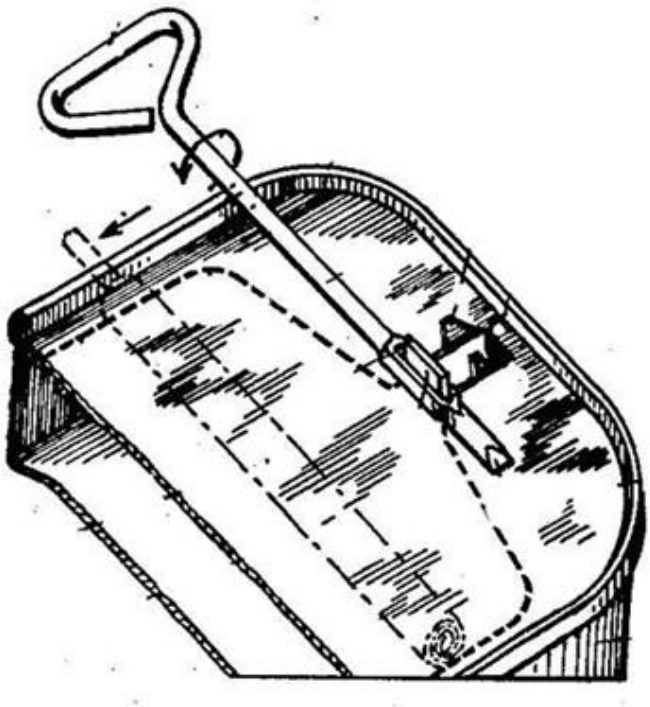

Informative references

Attention is drawn to the following places, which may be of interest for search:

Tearing-strips or -wire with tongues or tags for engagement by slotted keys	B65D 17/22

B65D 2517/0023

formed as part of the tab and moved into position

Definition statement

This subclass/group covers:

Illustrative example of subject matter classified in this group:

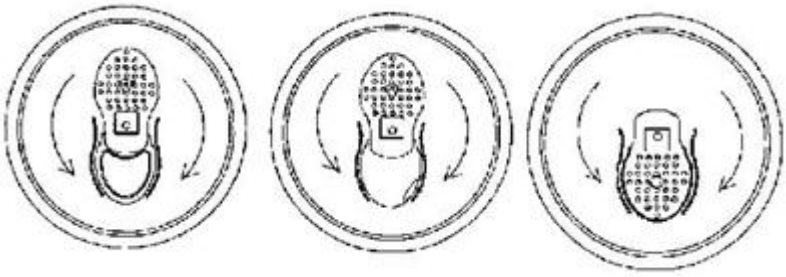

B65D 2517/0025

connected to the rivet and rotated into position, but formed separately from the tab

Definition statement

This subclass/group covers:

Illustrative example of subject matter classified in this group:

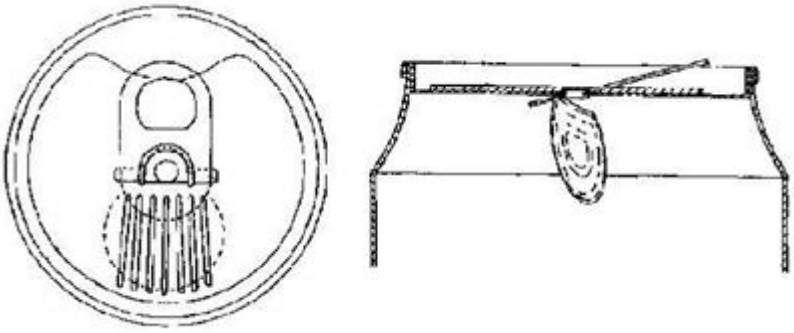

B65D 2517/0028

the element being part of the tab

Definition statement

This subclass/group covers:
Illustrative example of subject matter classified in this group:

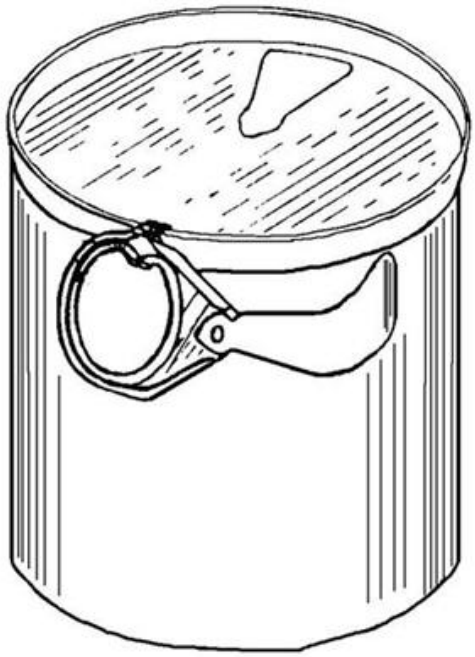

B65D 2517/0029

the element being part of the pull-out panel

Definition statement

This subclass/group covers:
Illustrative example of subject matter classified in this group:

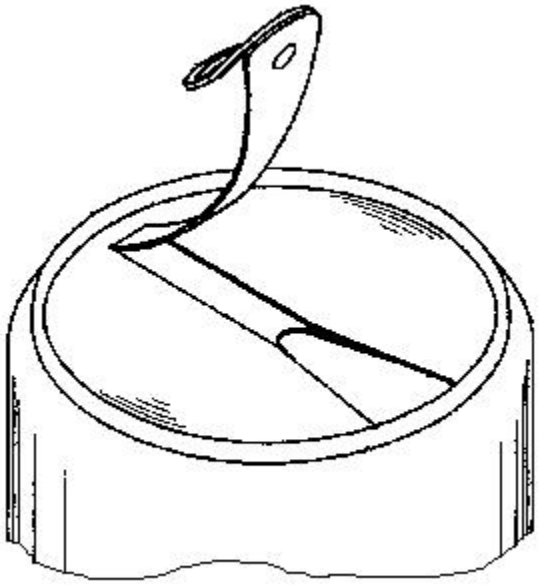

B65D 2517/0034

by means of the hand grip alone, e.g. rotating hand grip into opening

Definition statement

This subclass/group covers:
Illustrative example of subject matter classified in this group:

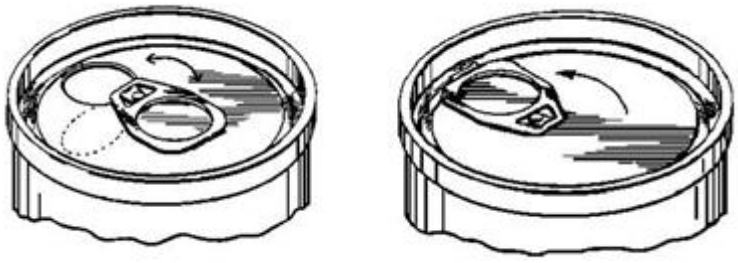

B65D 2517/0035

the tab and torn out panel together closing the opening, e.g. by sliding

Definition statement

This subclass/group covers:
Illustrative example of subject matter classified in this group:

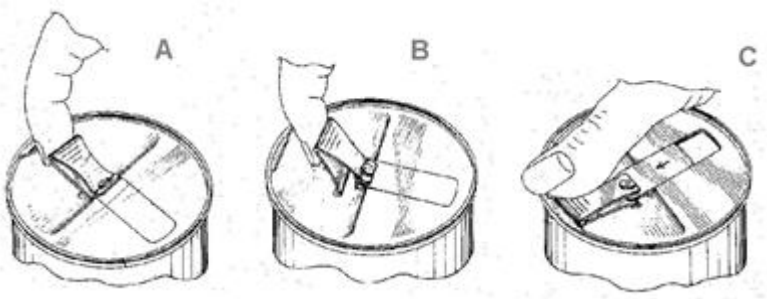

Informative references

Attention is drawn to the following places, which may be of interest for search:

Action for opening container linearly sliding tear panel	B65D 2517/0017

B65D 2517/0038

the plug being reinsertable into the opening

Definition statement

This subclass/group covers:

Illustrative example of subject matter classified in this group:

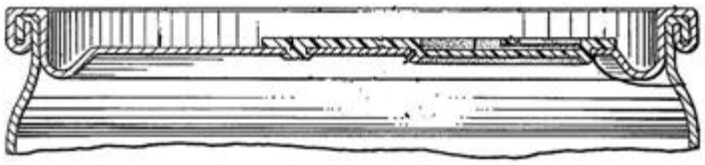

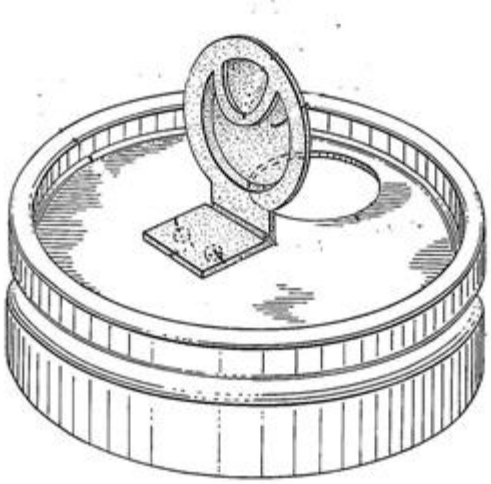

Informative references

Attention is drawn to the following places, which may be of interest for search:

Rigid or semi-rigid members	B65D 17/506
Separate closure devices for reclosing opened cans or tins	B65D 51/007
Reclosable openings in the form of a plug	B65D 2517/0043

B65D 2517/0041

in the form of a cover

Definition statement

This subclass/group covers:

Illustrative example of subject matter classified in this group:

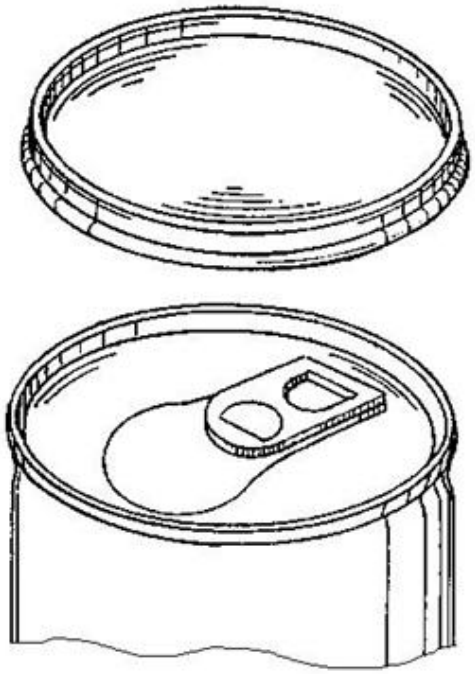

B65D 2517/0043

in the form of a plug

Informative references

Attention is drawn to the following places, which may be of interest for search:

Rigid or semi-rigid members	B65D 17/506
Separate closure devices for reclosing opened cans or tins	B65D 51/007
Reclosable openings the plug being reinsertable into the opening	B65D 2517/0038

B65D 2517/0044

attached to the tear tab

Definition statement

This subclass/group covers:

Illustrative example of subject matter classified in this group:

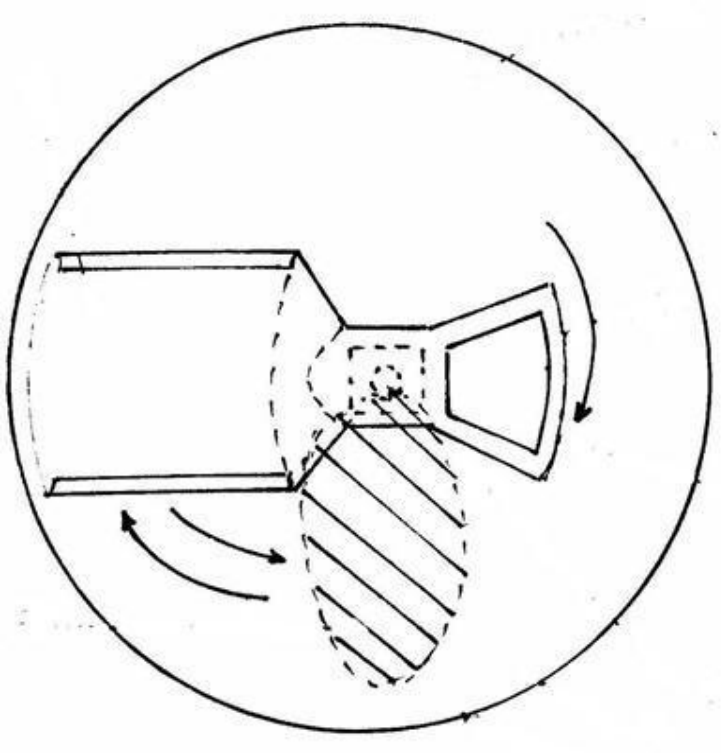

B65D 2517/0049

Straws, spouts, funnels, or other devices facilitating pouring or emptying

References relevant to classification in this group

This subclass/group does not cover:

Means for preventing dust contacting pouring opening	B65D 2517/0098

B65D 2517/005

formed as part of the tab

Informative references

Attention is drawn to the following places, which may be of interest for search:

Closures with swivelling dispensing devices	B65D 47/046

B65D 2517/0052

Prizes, tokens, badges or other information carrying devices

Informative references

Attention is drawn to the following places, which may be of interest for search:

Closures provided with decoration, information or contents indicating devices, labels	B65D 51/245

B65D 2517/0058

Other details of container end panel (not used)

Special rules of classification within this group

If no information given or if end panel is made of metal then no code is necessary

B65D 2517/0059

General cross-sectional shape of container end panel (not used)

Definition statement

This subclass/group covers:
Illustrative example of subject matter classified in this group:

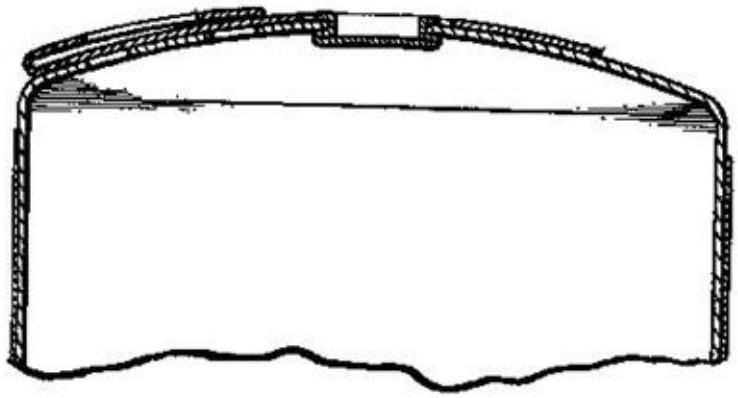

B65D 2517/0062

and provided with an additional U-shaped peripheral channel

Definition statement

This subclass/group covers:
Illustrative example of subject matter classified in this group:

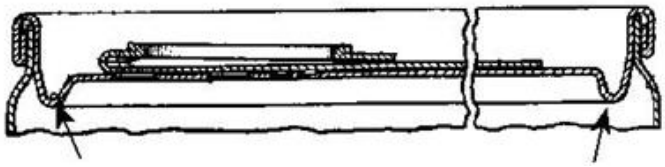

B65D 2517/0064

inverted U-shaped

Definition statement

This subclass/group covers:
Illustrative example of subject matter classified in this group:

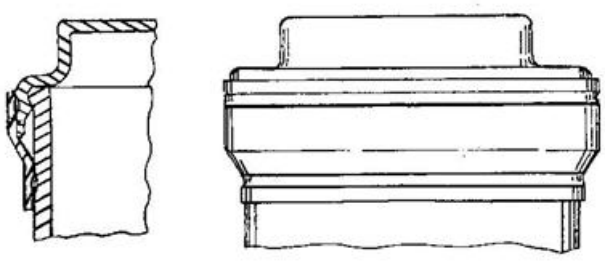

B65D 2517/0068

Ribs or projections in container end panel (not used)

Definition statement

This subclass/group covers:
Illustrative example of subject matter classified in this group:

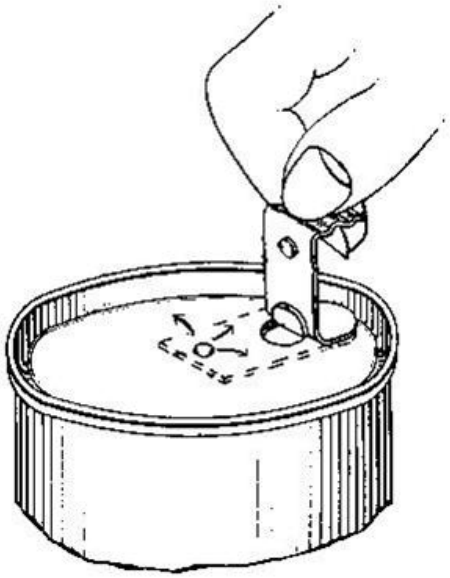

B65D 2517/0071

located externally of tear-out/push-in panel or preformed opening

Informative references

Attention is drawn to the following places, which may be of interest for search:

Ribs or projections in container end panel located under tab hand grip to facilitate initial lifting of the tab	B65D 2517/0073

B65D 2517/0074

Local recess in container end panel

Definition statement

This subclass/group covers:
Illustrative example of subject matter classified in this group:

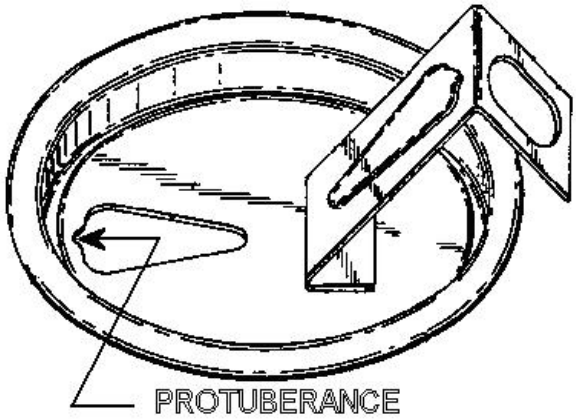

B65D 2517/0076

located beneath tab contact point

Definition statement

This subclass/group covers:
Illustrative examples of subject matter classified in this group:

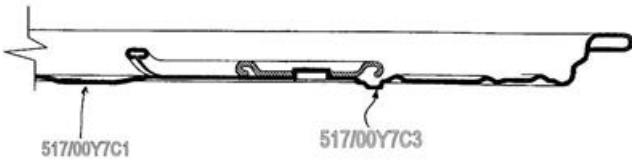

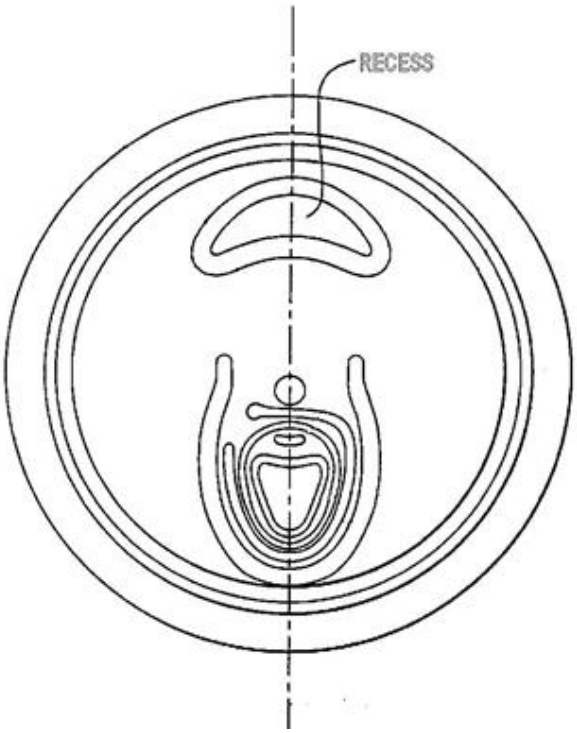

Informative references

Attention is drawn to the following places, which may be of interest for search:

Generally used in metal cans with opening actions	B65D 2517/0014, B65D 2517/0016

B65D 2517/0077

located externally of tear-out/push-in panel or preformed opening

Informative references

Attention is drawn to the following places, which may be of interest for search:

Local recess in container end panel	B65D 2517/0074

B65D 2517/0079

located beneath tab hand grip to facilitate initial lifting

Definition statement

This subclass/group covers:
Illustrative example of subject matter classified in this group:

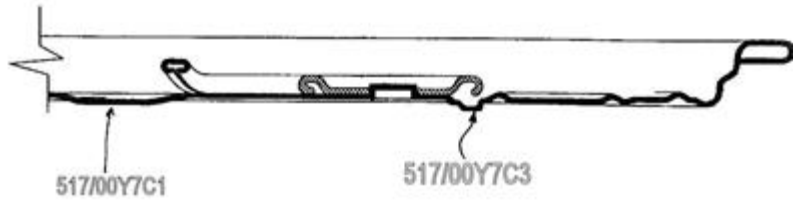

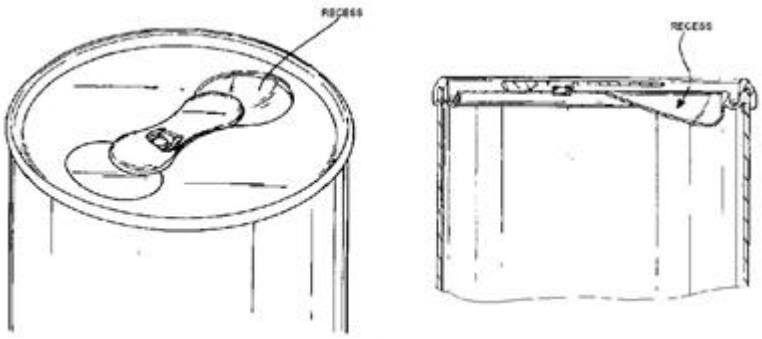

B65D 2517/0092

formed as a partial score line located close to the tab connection

Definition statement

This subclass/group covers:
Illustrative example of subject matter classified in this group:

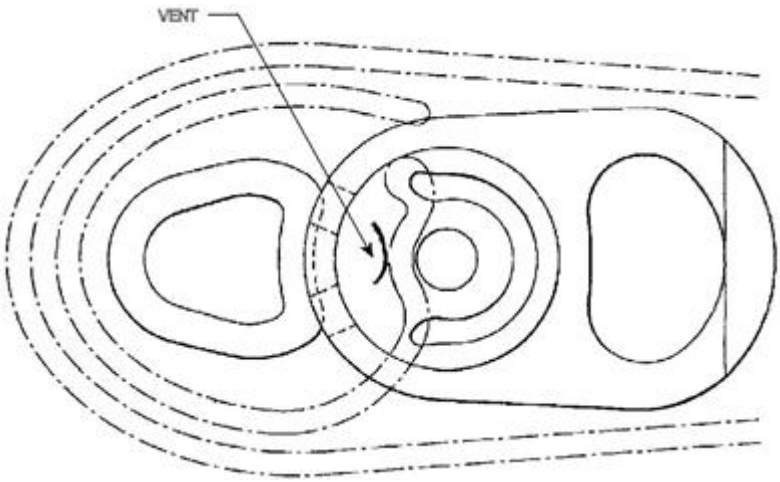

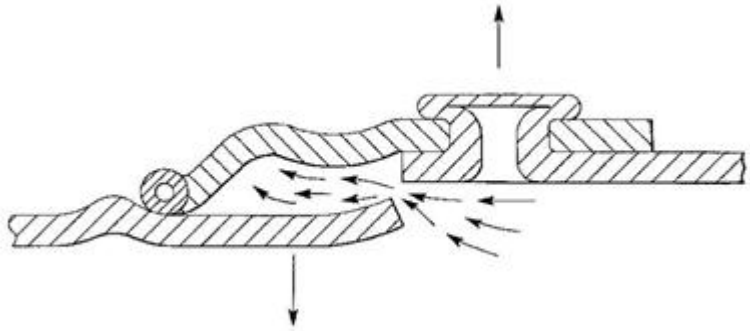

B65D 2517/0094

formed as a separate opening

Definition statement

This subclass/group covers:
Venting openings for gas in carbonated beverages

Informative references

Attention is drawn to the following places, which may be of interest for search:

Details of preformed openings provided with a plurality of openings	B65D 2517/5059

B65D 2517/0098

Means for preventing dust contacting pouring opening, e.g. a cover over the tear panel

Informative references

Attention is drawn to the following places, which may be of interest for search:

Arrangements of closures with protective outer cap-like covers or of two or more co-operating closures the outer closure being a foil membrane	B65D 51/185

B65D 2517/5005

with a part of the tape melted through the opening

Definition statement

This subclass/group covers:
Illustrative example of subject matter classified in this group:

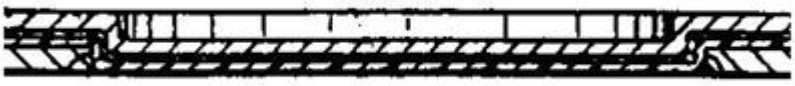

B65D 2517/5008

with a sealing coat

Definition statement

This subclass/group covers:
Illustrative example of subject matter classified in this group:

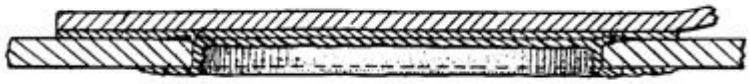

B65D 2517/501

with the tape, or one layer thereof, being folded to cover both the top and bottom of container end panel

Definition statement

This subclass/group covers:
Illustrative example of subject matter classified in this group:

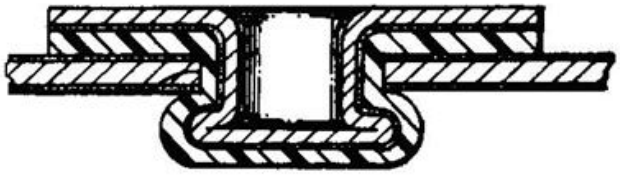

B65D 2517/5013

the tape covering almost the whole of the container end panel

Definition statement

This subclass/group covers:
Illustrative example of subject matter classified in this group:



B65D 2517/5021

Spiral shaped tear-out tape

Definition statement

This subclass/group covers:
Illustrative example of subject matter classified in this group:



B65D 2517/5048

rolled or folded back, e.g. to avoid sharp edges

Definition statement

This subclass/group covers:
Illustrative example of subject matter classified in this group:

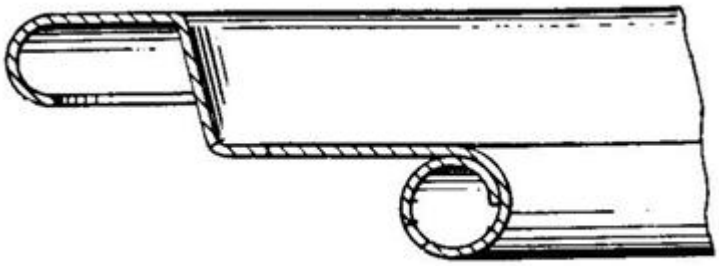

B65D 2517/5056

the edge of the preformed opening having a covering element or coating, e.g. to prevent cutting or for sealing purposes

Definition statement

This subclass/group covers:
Illustrative example of subject matter classified in this group:

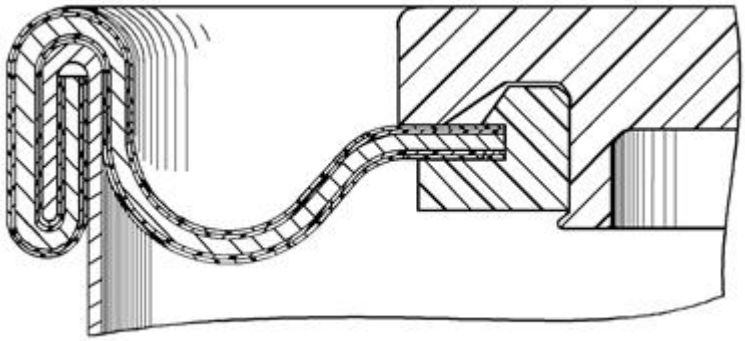

B65D 2517/5078

finger opening edge rolled or folded over

Definition statement

This subclass/group covers:
Illustrative example of subject matter classified in this group:

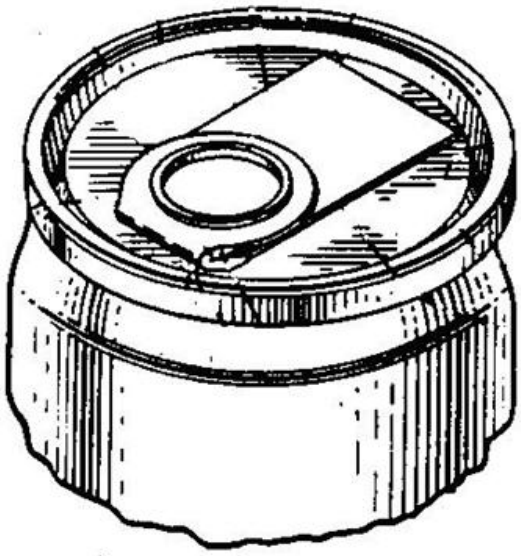

B65D 2517/5086

Tape having a U-shaped peripheral section which forms the pull-tab

Definition statement

This subclass/group covers:

Illustrative example of subject matter classified in this group:

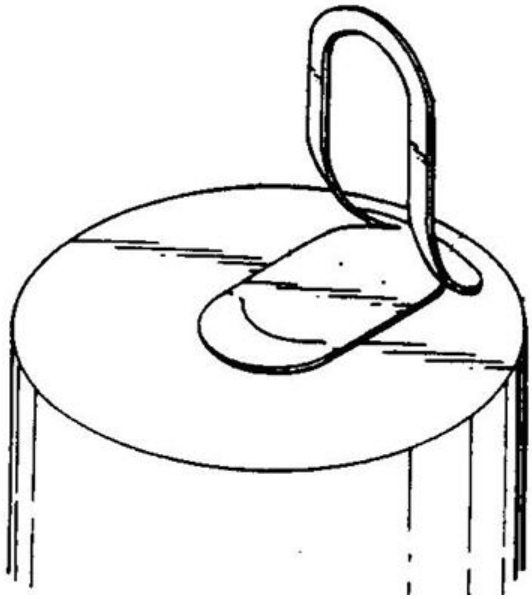

B65D 2519/00019

Paper

Definition statement

This subclass/group covers:
Illustrative example of subject matter classified in this group:

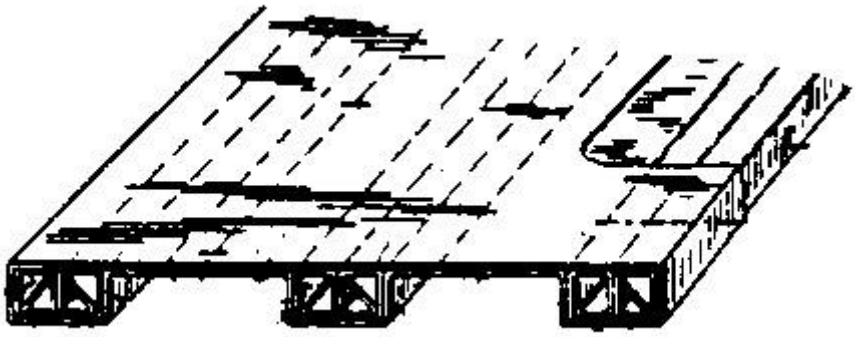

B65D 2519/00024

Metal

Definition statement

This subclass/group covers:
Illustrative example of subject matter classified in this group:

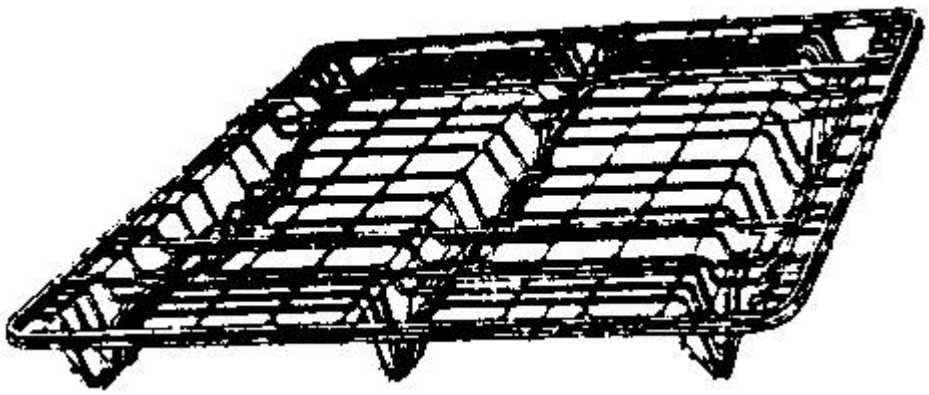

B65D 2519/00029

Wood

Definition statement

This subclass/group covers:
Illustrative example of subject matter classified in this group:

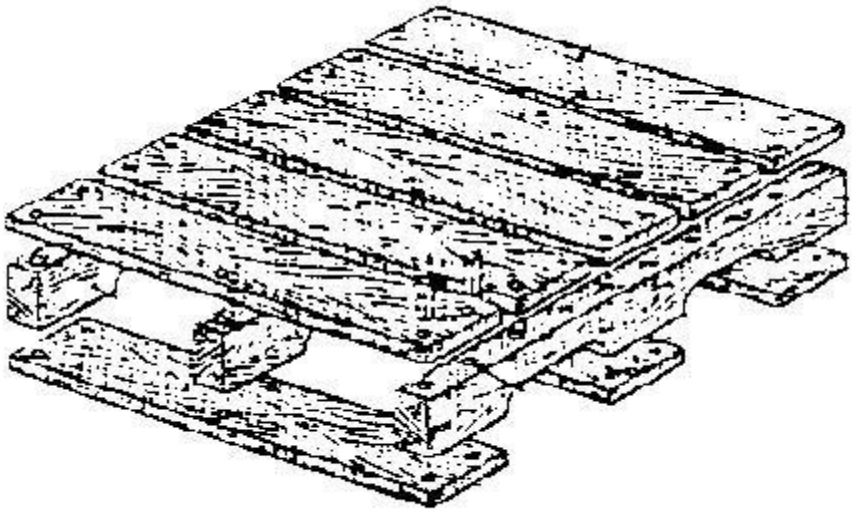

B65D 2519/00034

Plastic

Definition statement

This subclass/group covers:
Illustrative example of subject matter classified in this group:

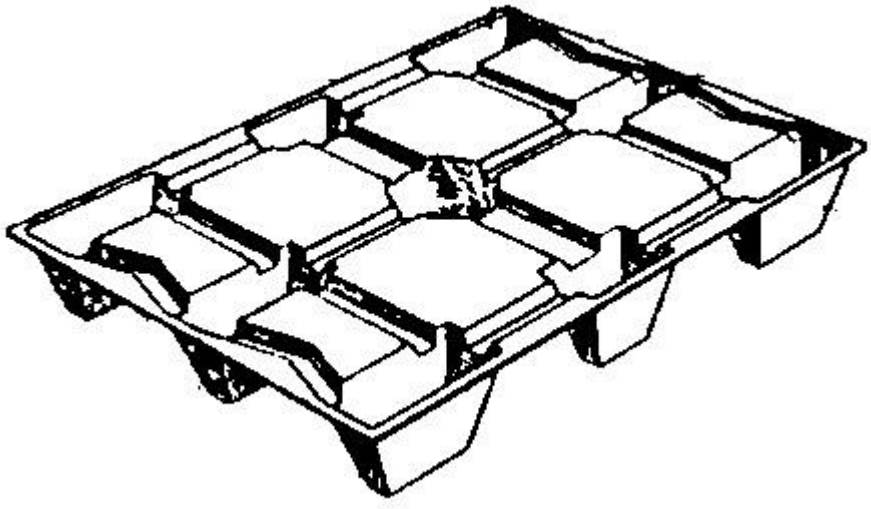

B65D 2519/00039

Agglomerates, i.e. different materials mixed together

Special rules of classification within this group

where applicable, documents should also be classified in B65D 2519/00019; B65D 2519/00024; B65D 2519/00029; B65D 2519/00034;

B65D 2519/00044

Combination, e.g. different elements made of different materials, laminates

Special rules of classification within this group

where applicable, documents should also be classified in B65D 2519/00019; B65D 2519/00024; B65D 2519/00029; B65D 2519/00034;

B65D 2519/00054

Paper

Definition statement

This subclass/group covers:
Illustrative example of subject matter classified in this group:

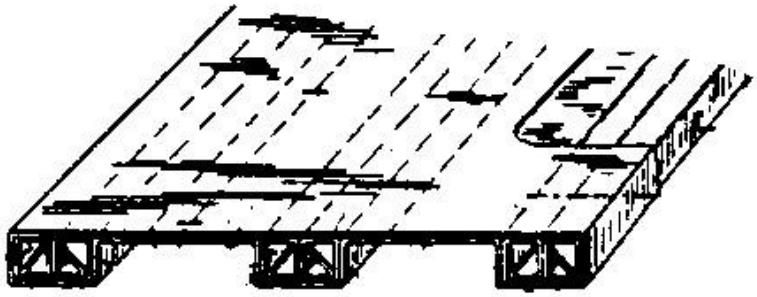

B65D 2519/00059

Metal

Definition statement

This subclass/group covers:
Illustrative example of subject matter classified in this group:

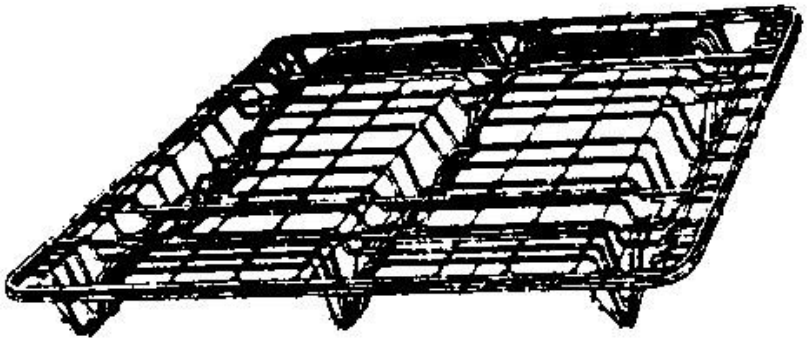

B65D 2519/00064

Wood

Definition statement

This subclass/group covers:
Illustrative example of subject matter classified in this group:

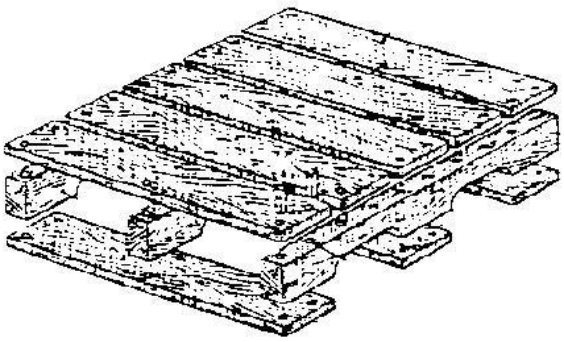

B65D 2519/00069

Plastic

Definition statement

This subclass/group covers:
Illustrative example of subject matter classified in this group:

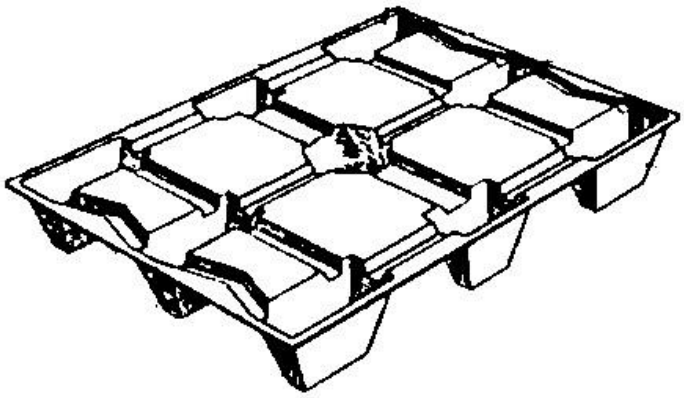

B65D 2519/00074

Agglomerates, i.e. different materials mixed together

Special rules of classification within this group

Where applicable, documents should also be classified in B65D 2519/00054; B65D 2519/00059; B65D 2519/00064; B65D 2519/00069;

B65D 2519/00079

Combination, e.g. different elements made of different materials, laminates

Special rules of classification within this group

Where applicable, documents should also be classified in B65D 2519/00054; B65D 2519/00059; B65D 2519/00064; B65D 2519/00069;

B65D 2519/00084

for the non-integral separating spacer

Special rules of classification within this group

If the separating spacer is integral with the load supporting surface or base surface, then it is considered to be part of the load supporting surface or base surface. Such documents should not be classified here.

B65D 2519/00099

Wood

Definition statement

This subclass/group covers:

Illustrative example of subject matter classified in this group:

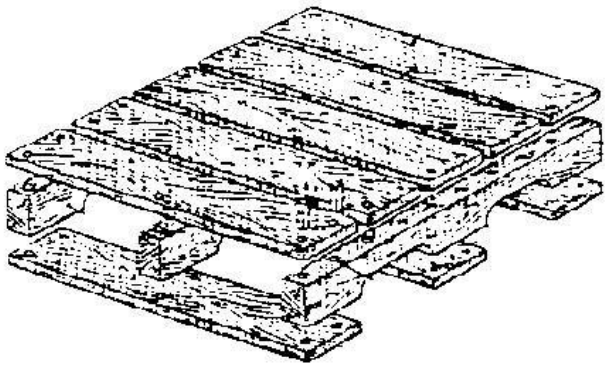

B65D 2519/00109

Agglomerates, i.e. different materials mixed together

Special rules of classification within this group

Where applicable, documents should also be classified in B65D 2519/00089; B65D 2519/00094; B65D 2519/00099; B65D 2519/00104;

B65D 2519/00114

Combination, e.g. different elements made of different materials, laminates

Special rules of classification within this group

Where applicable, documents should also be classified in B65D 2519/00089; B65D 2519/00094; B65D 2519/00099; B65D 2519/00104;

B65D 2519/00119

for the construction of the reinforcements (not used for the integral reinforcements)

Special rules of classification within this group

Reinforcements which are integral with the load supporting surface and/or base surface and/or spacer/s should not be classified here.

B65D 2519/00124

Paper

Definition statement

This subclass/group covers:
Illustrative example of subject matter classified in this group:

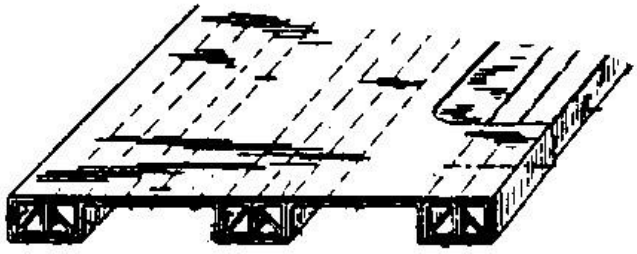

B65D 2519/00144

Agglomerates, i.e. different materials mixed together

Special rules of classification within this group

where applicable, documents should also be classified in B65D 2519/00124,

B65D 2519/00129, B65D 2519/00134, B65D 2519/00139.

B65D 2519/00149

Combination, e.g. different elements made of different materials, laminates

Special rules of classification within this group

where applicable, documents should also be classified in B65D 2519/00124, B65D 2519/00129, B65D 2519/00134, B65D 2519/00139.

B65D 2519/00179

Agglomerates, i.e. different materials mixed together

Special rules of classification within this group

where applicable, documents should also be classified in B65D 2519/00159, B65D 2519/00164, B65D 2519/00169, B65D 2519/00174.

B65D 2519/00184

Combination, e.g. different elements made of different

materials, laminates

Special rules of classification within this group

where applicable, documents should also be classified in B65D 2519/00159, B65D 2519/00164, B65D 2519/00169, B65D 2519/00174.

B65D 2519/00213

Agglomerates, i.e. different materials mixed together

Special rules of classification within this group

where applicable, documents should also be classified in B65D 2519/00194, B65D 2519/00199, B65D 2519/00203, B65D 2519/00208.

B65D 2519/00218

Combination, e.g. different elements made of different materials, laminates

Special rules of classification within this group

where applicable, documents should also be classified in B65D 2519/00194, B65D 2519/00199, B65D 2519/00203, B65D 2519/00208.

B65D 2519/00248

Agglomerates, i.e. different materials mixed together

Special rules of classification within this group

where applicable, documents should also be classified in B65D 2519/00228, B65D 2519/00233, B65D 2519/00238, B65D 2519/00243.

B65D 2519/00253

Combination, e.g. different elements made of different materials, laminates

Special rules of classification within this group

where applicable, documents should also be classified in B65D 2519/00228, B65D 2519/00233, B65D 2519/00238, B65D 2519/00243.

B65D 2519/00268

made of one piece

Definition statement

This subclass/group covers:
Illustrative example of subject matter classified in this group:

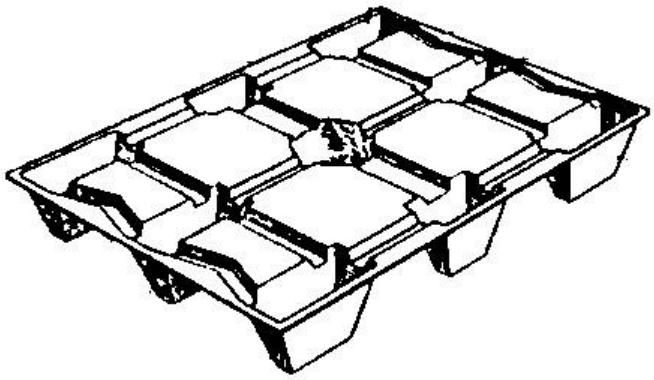

B65D 2519/00273

made of more than one piece

Definition statement

This subclass/group covers:
Illustrative example of subject matter classified in this group:

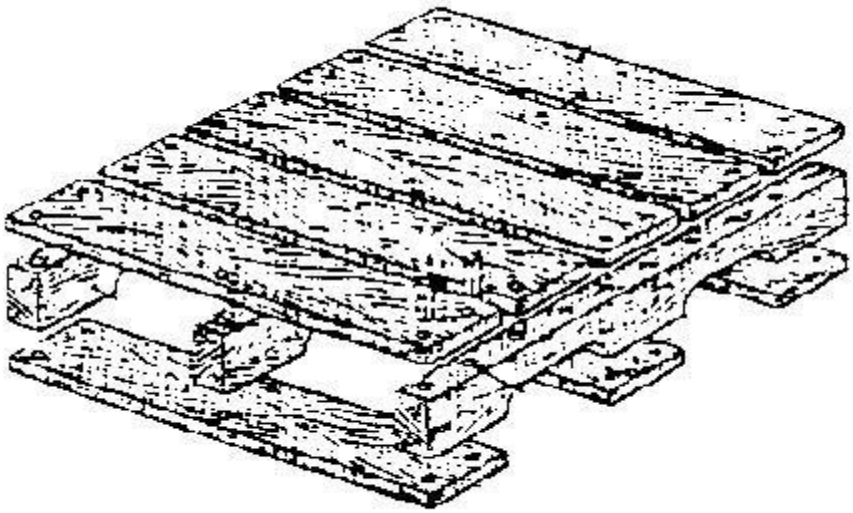

B65D 2519/00288

made of one piece

Definition statement

This subclass/group covers:
Illustrative example of subject matter classified in this group:

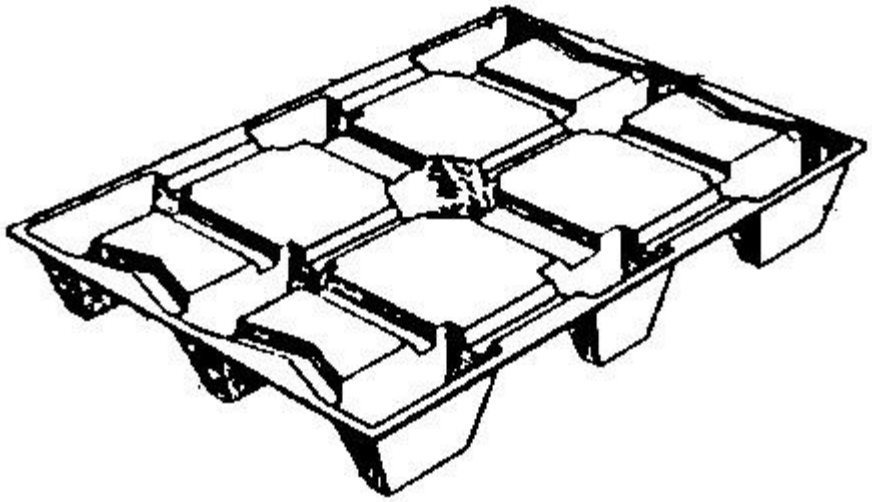

B65D 2519/00293

made of more than one piece

Definition statement

This subclass/group covers:
Illustrative example of subject matter classified in this group:

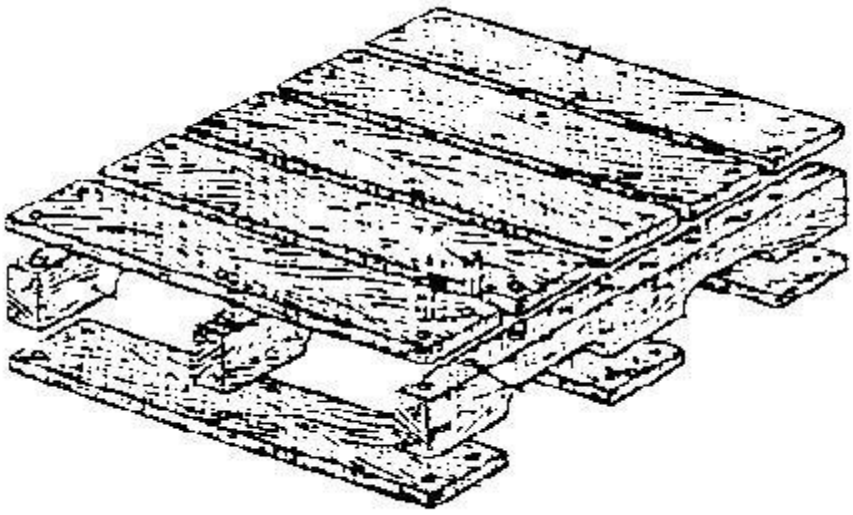

B65D 2519/00298

skeleton type

Definition statement

This subclass/group covers:
Illustrative example of subject matter classified in this group:

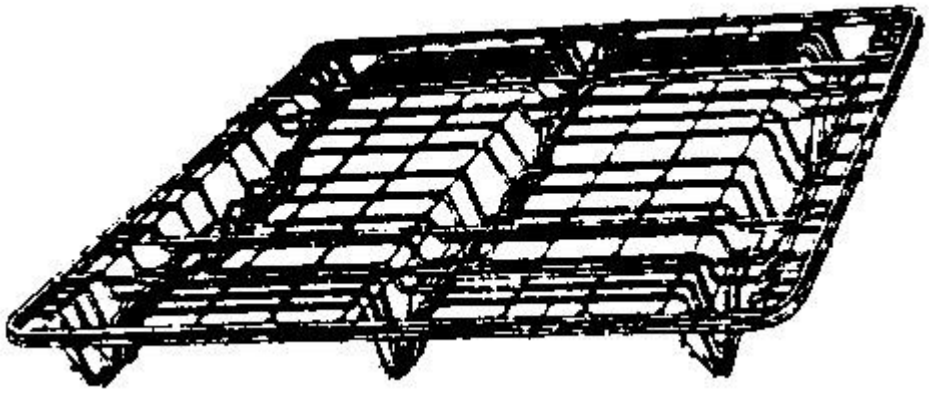

B65D 2519/00318

made of one piece

Definition statement

This subclass/group covers:
Illustrative example of subject matter classified in this group:

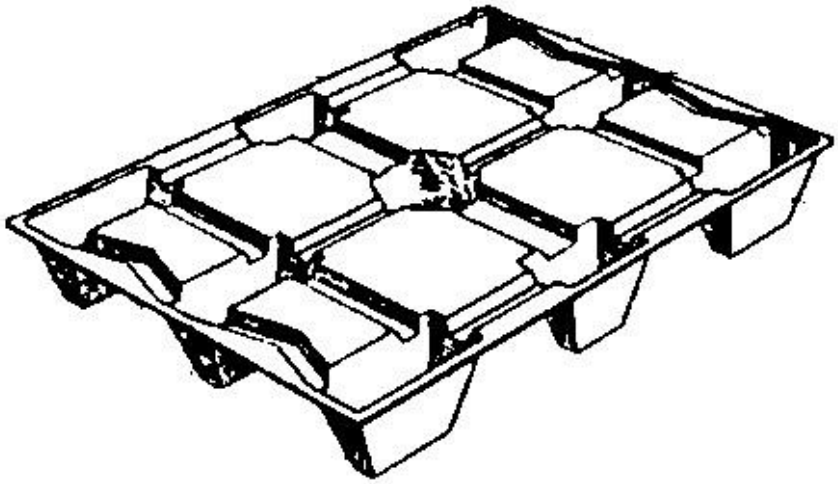

B65D 2519/00323

made of more than one piece

Definition statement

This subclass/group covers:
Illustrative example of subject matter classified in this group:

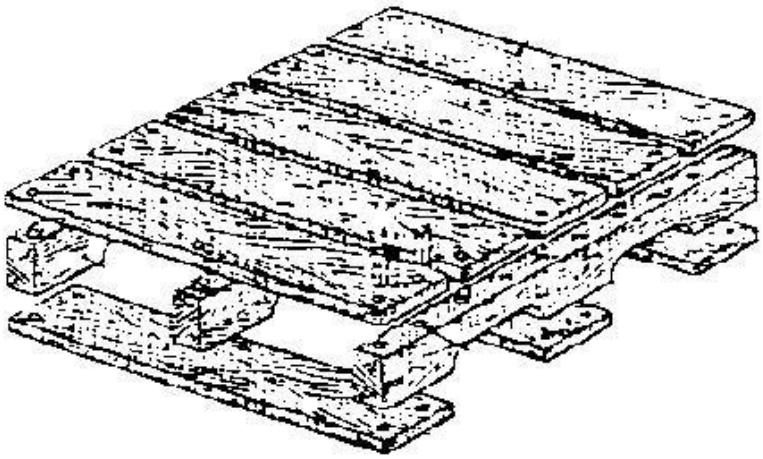

B65D 2519/00333

contact surface having a stringer-like shape

Definition statement

This subclass/group covers:
Illustrative example of subject matter classified in this group:

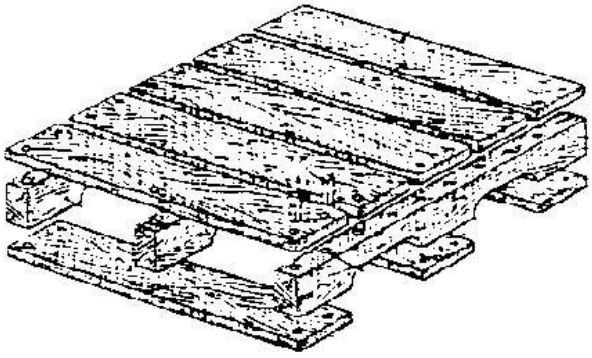

B65D 2519/00338

contact surface having a discrete foot-like shape

Definition statement

This subclass/group covers:

Illustrative example of subject matter classified in this group:

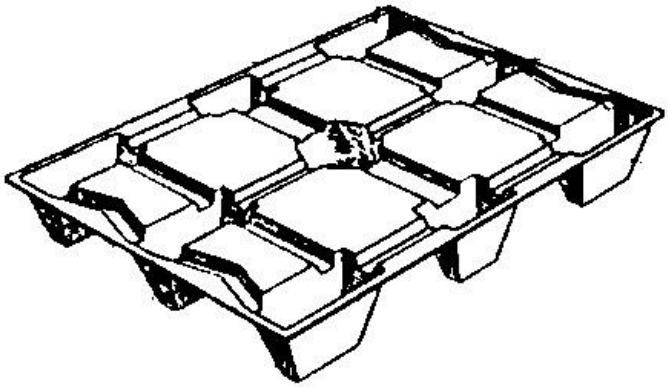

B65D 2519/00353

skeleton type

Definition statement

This subclass/group covers:

Illustrative example of subject matter classified in this group:

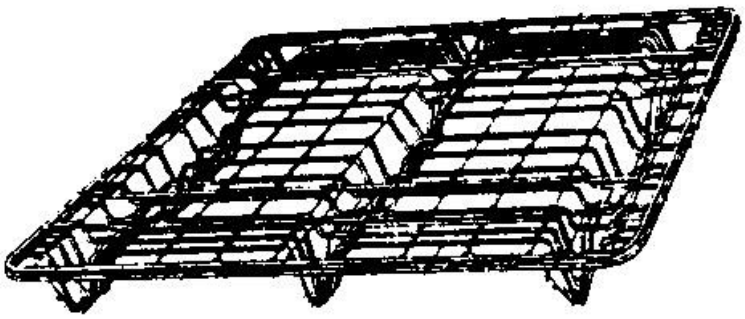

B65D 2519/00368

of the non-integral separating spacer

References relevant to classification in this group

This subclass/group does not cover:

If the separating spacer is integral with the load supporting surface or base surface, then it is considered to be part of the load supporting surface or base surface. Such documents should not be classified here.

B65D 2519/00373

made of one piece

Definition statement

This subclass/group covers:
Illustrative example of subject matter classified in this group:

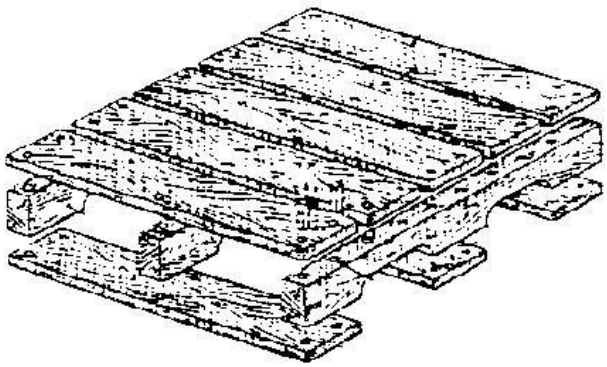

B65D 2519/00532

Frame structures

Informative references

Attention is drawn to the following places, which may be of interest for search:

Frames, corner posts or pallet converters	B65D 19/385

B65D 2519/00781

for moving on a surface, e.g. wheels, pads (B65D 2519/00825 takes precedence)

Informative references

Attention is drawn to the following places, which may be of interest for search:

Arrangements or applications of rollers or wheels	B65D 19/42
Finishing of the external surfaces	B65D 2519/00825

B65D 2519/00796

Guiding means for fork-lift

Special rules of classification within this group

normal openings between the load supporting surface and base surface are not considered as guiding means and therefore are not classified here;

B65D 2519/0081

Elements or devices for locating articles

Informative references

Attention is drawn to the following places, which may be of interest for search:

Elements or devices for locating articles on platforms	B65D 19/44

B65D 2519/00815

on the pallet

Definition statement

This subclass/group covers:

Illustrative example of subject matter classified in this group:

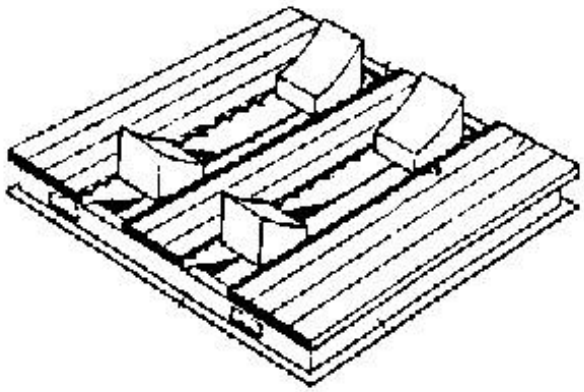

Informative references

Attention is drawn to the following places, which may be of interest for search:

Elements or devices for locating articles on platforms	B65D 19/44

B65D 2519/0082

in the side wall

Informative references

Attention is drawn to the following places, which may be of interest for search:

Elements or devices for locating articles on platforms	B65D 19/44

B65D 2539/003

provided with sealing flanges or ribs

Definition statement

This subclass/group covers:
Illustrative example of subject matter classified in this group:

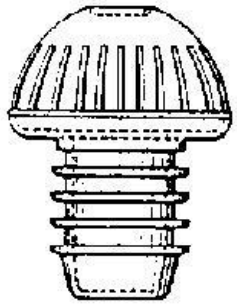

B65D 2539/005

provided with slits or gaps for increasing the elasticity

Definition statement

This subclass/group covers:
Illustrative example of subject matter classified in this group:

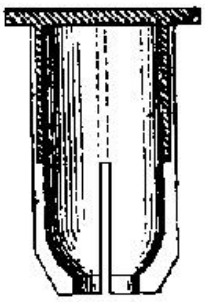

B65D 2539/006

provided with separate sealing rings

Definition statement

This subclass/group covers:
Illustrative example of subject matter classified in this group:



B65D 2539/008

with coatings or coverings

Definition statement

This subclass/group covers:
Illustrative example of subject matter classified in this group:

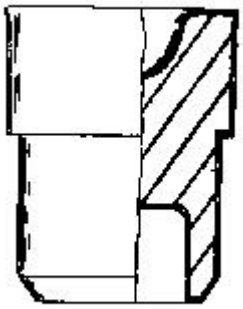

B65D 2543/00009

Details of lids or covers for rigid or semi-rigid containers

Definition statement

This subclass/group covers:
Also used for B65D 43/16, but don´t forget also the B65D 2251/10.

References relevant to classification in this group

This subclass/group does not cover:

More general details relating to container closures	B65D 2251/00

B65D 2543/00027

Stackable lids or covers

Definition statement

This subclass/group covers:
Illustrative example of subject matter classified in this group:

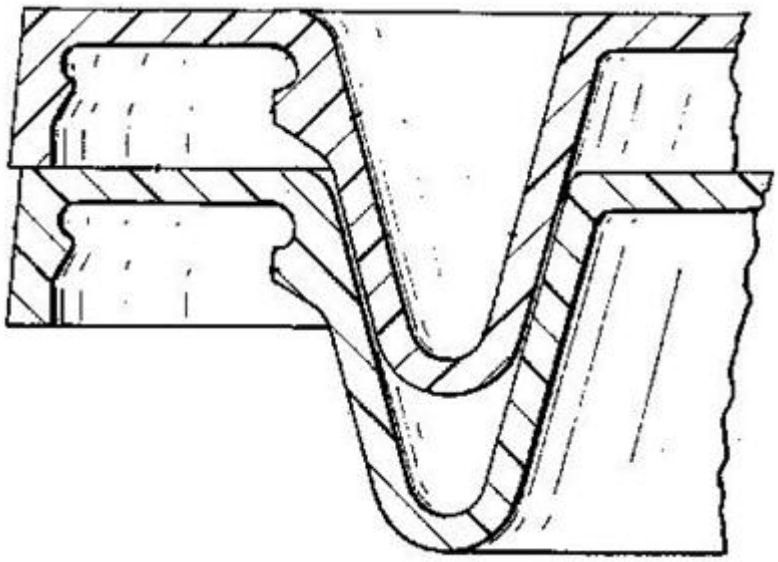

B65D 2543/00037

Disc closures

Definition statement

This subclass/group covers:
Illustrative example of subject matter classified in this group:

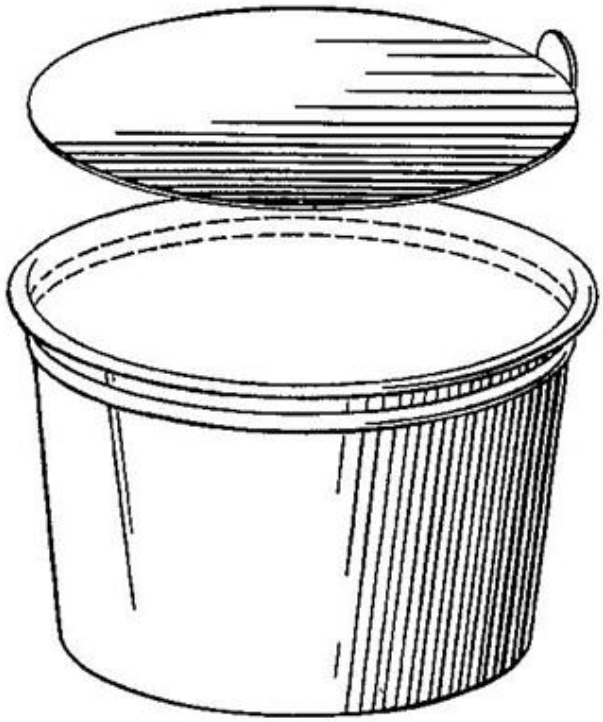

Informative references

Attention is drawn to the following places, which may be of interest for search:

Disc closures	B65D 39/02
Rigid discs or spherical members adapted to be held in sealing engagement with mouth of container	B65D 51/14

B65D 2543/00046

Drinking-through lids

Definition statement

This subclass/group covers:

Illustrative example of subject matter classified in this group:

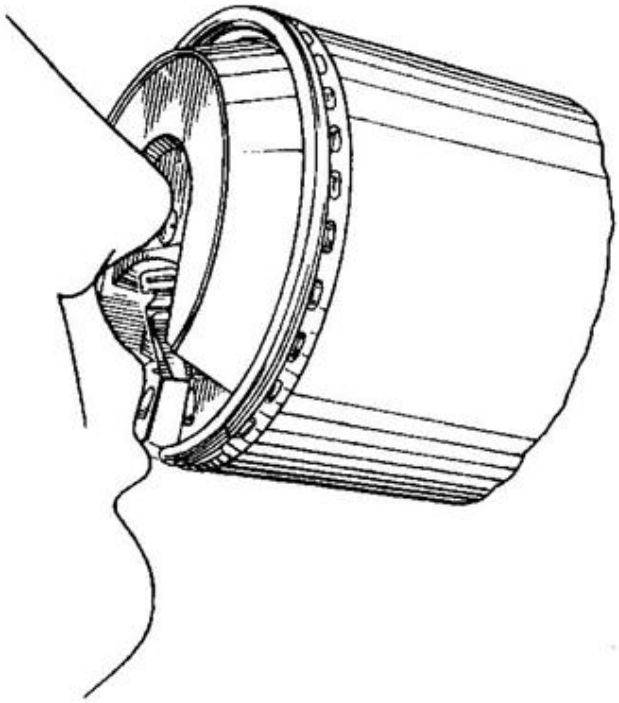

Informative references

Attention is drawn to the following places, which may be of interest for search:

Means for facilitating drinking from drinking glasses or cups comprising lids or covers	A47G 19/2272

B65D 2543/00055

Lids serving as, or incorporating, drinking or measuring vessels

Definition statement

This subclass/group covers:

Illustrative example of subject matter classified in this group:

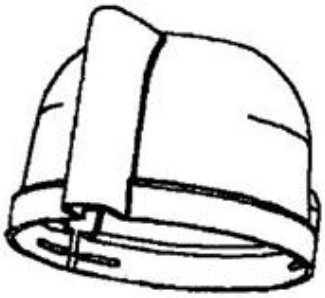

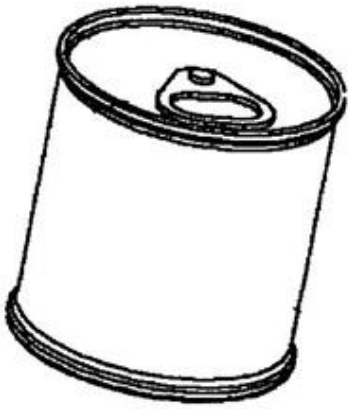

References relevant to classification in this group

This subclass/group does not cover:

Measuring cups	G01F 19/00

Informative references

Attention is drawn to the following places, which may be of interest for search:

Caps or cap-like covers serving as, or incorporating, drinking or measuring vessels	B65D 41/26

Caps or cap-like covers serving as, or incorporating, drinking or measuring vessels	B65D 41/56

B65D 2543/00074

curved (combined with straight sides B65D 2543/0012)

Definition statement

This subclass/group covers:
Illustrative example of subject matter classified in this group:



B65D 2543/00101

square-like or rectangular-like

Definition statement

This subclass/group covers:
Illustrative example of subject matter classified in this group:

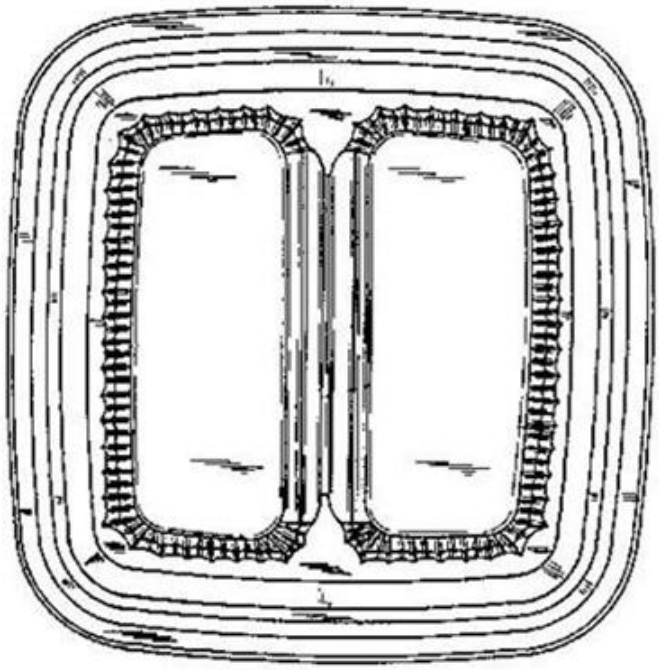

B65D 2543/00111

triangular-like, i.e. three curved sides

Definition statement

This subclass/group covers:
Illustrative example of subject matter classified in this group:

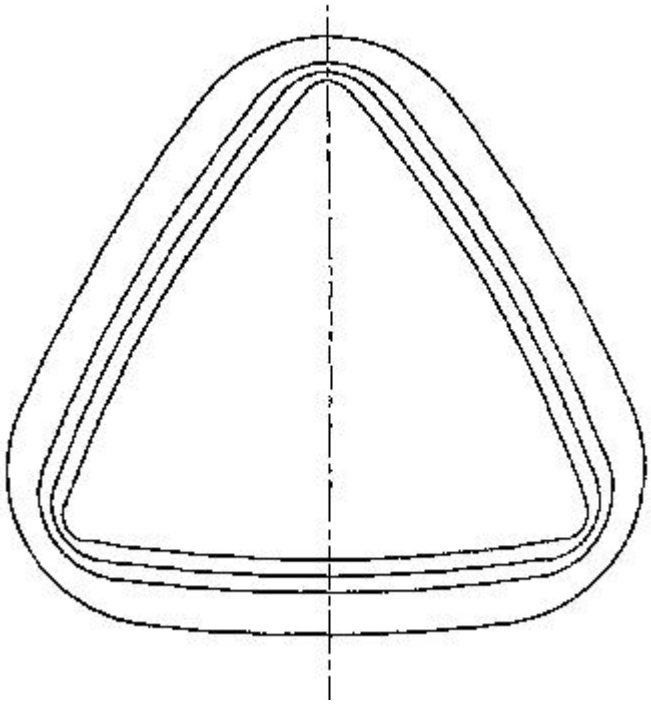

B65D 2543/0012

having straight sides, e.g. with curved corners

Definition statement

This subclass/group covers:
Illustrative example of subject matter classified in this group:

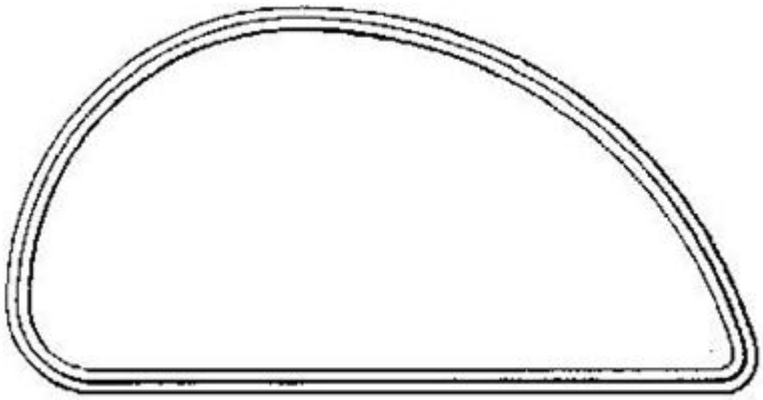

B65D 2543/00138

with one curved side

Definition statement

This subclass/group covers:
Illustrative example of subject matter classified in this group:

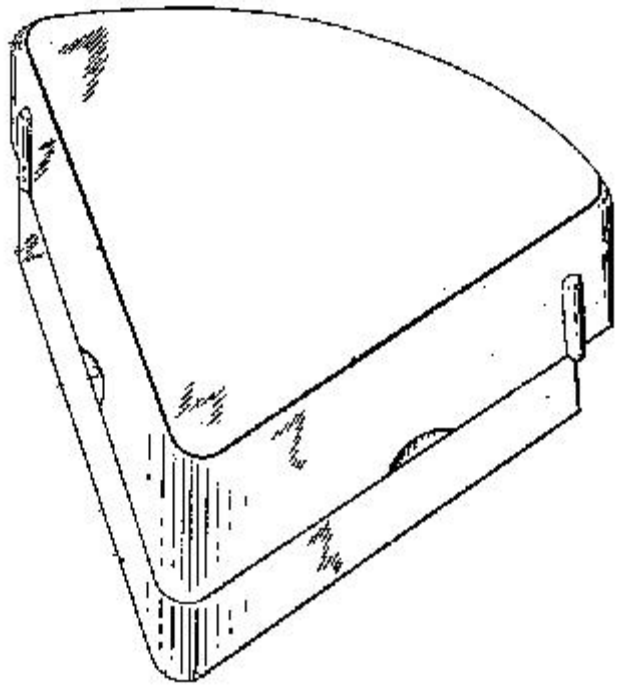

B65D 2543/00148

with two curved sides

Definition statement

This subclass/group covers:
Illustrative example of subject matter classified in this group:

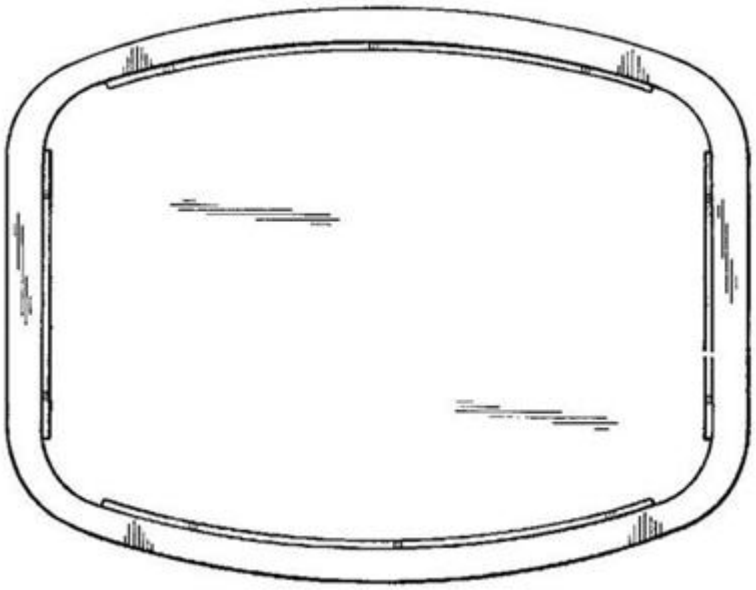

B65D 2543/00166

and at least one curved side

Definition statement

This subclass/group covers:
Illustrative example of subject matter classified in this group:

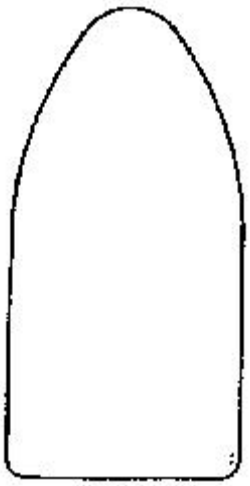

B65D 2543/00175

four straight sides, e.g. trapezium or diamond

Definition statement

This subclass/group covers:
Illustrative example of subject matter classified in this group:

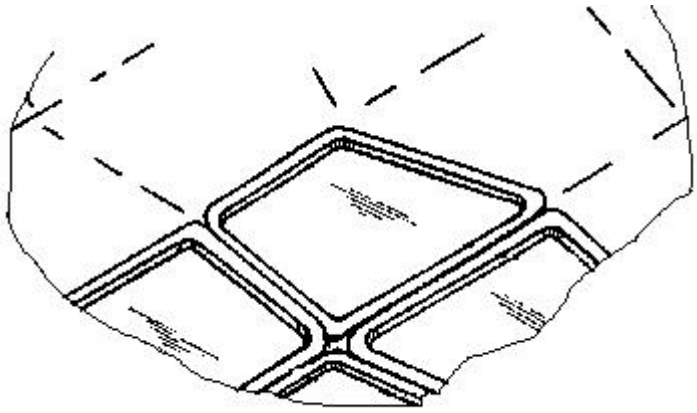

B65D 2543/00185

and at least one curved side

Definition statement

This subclass/group covers:
Illustrative example of subject matter classified in this group:

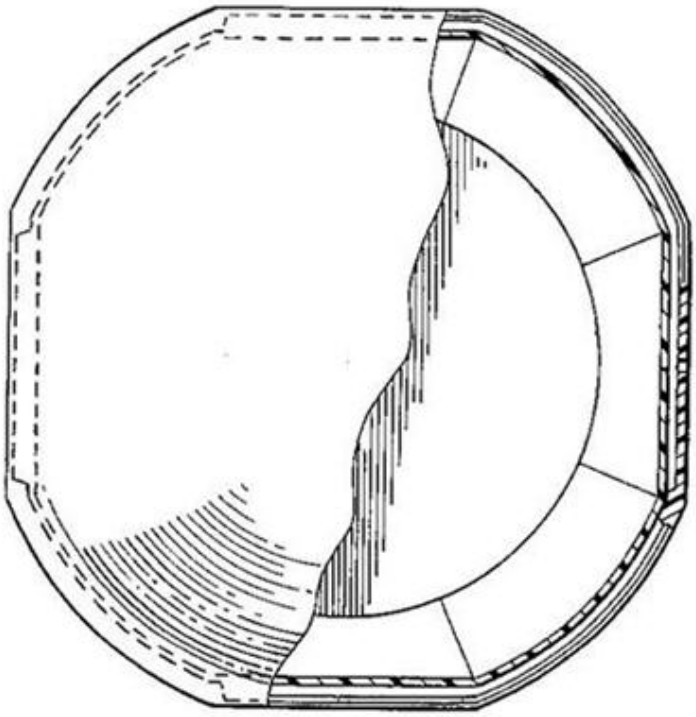

B65D 2543/00222

Hollow and made of one piece

Definition statement

This subclass/group covers:
Illustrative example of subject matter classified in this group:

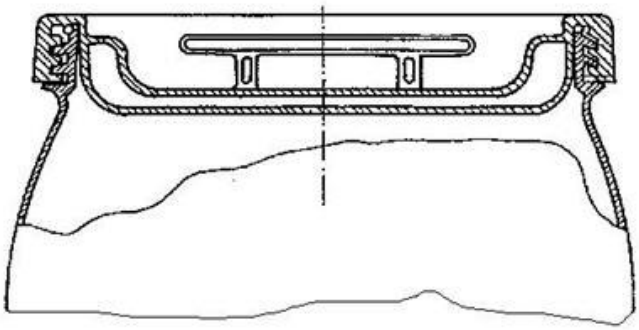

B65D 2543/00231

made of several pieces

References relevant to classification in this group

This subclass/group does not cover:

Several materials	B65D 2543/00314

B65D 2543/0024

two pieces, one forming at least the whole skirt, the other forming at least the whole upper part

Definition statement

This subclass/group covers:

Illustrative example of subject matter classified in this group:

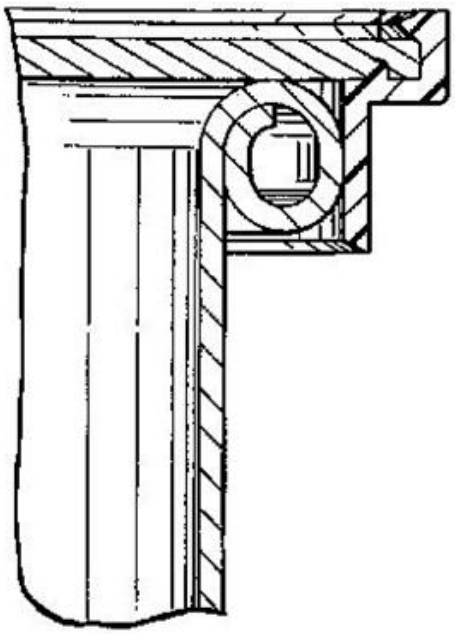

B65D 2543/0025

Multi-position closures

Definition statement

This subclass/group covers:

Illustrative example of subject matter classified in this group:

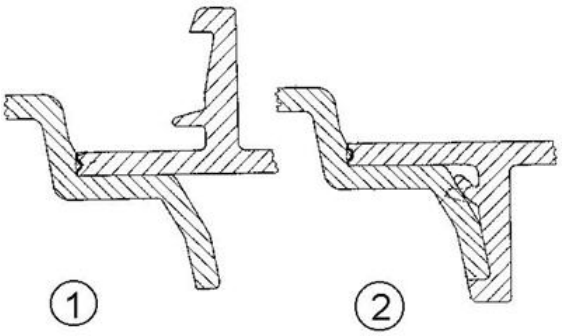

References relevant to classification in this group

This subclass/group does not cover:

Specifically formed for supporting the container	B65D 51/249

Informative references

Attention is drawn to the following places, which may be of interest for search:

Closures specially adapted for closing container mouths of differing size or configuration	B65D 2251/08

B65D 2543/00324

Lids integrally moulded with the container, or with a connecting piece, and separated therefrom by rupturing the connection before the first use

Definition statement

This subclass/group covers:

Illustrative example of subject matter classified in this group:

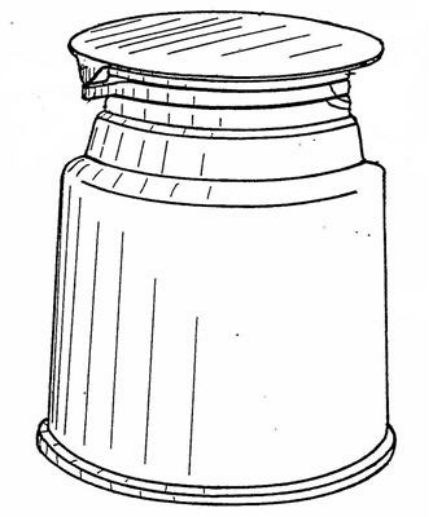

Informative references

Attention is drawn to the following places, which may be of interest for search:

Integral frangible closures	B65D 1/0238
Integral, or permanently secured, end or side closures	B65D 17/06

B65D 2543/00333

Not reusable, e.g. destroyed on opening

Definition statement

This subclass/group covers:

Illustrative example of subject matter classified in this group:

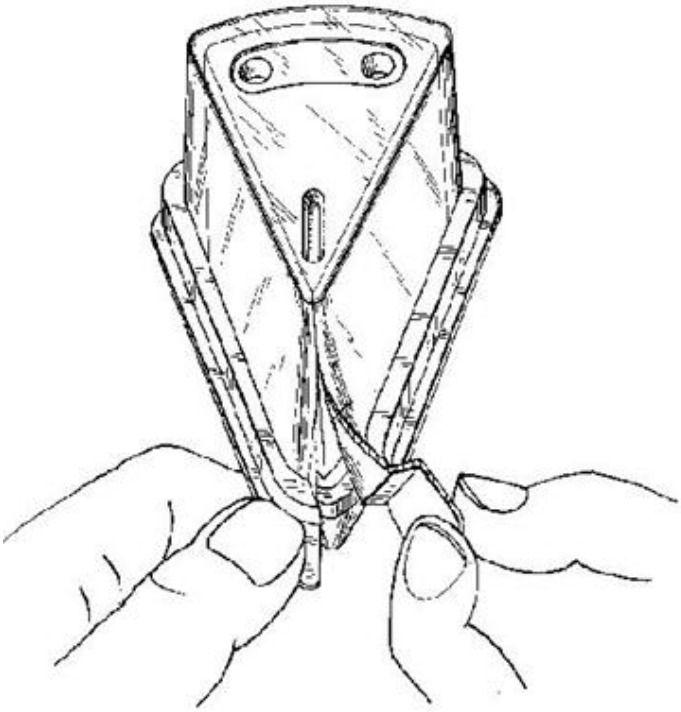

B65D 2543/00351

Dome-like

Definition statement

This subclass/group covers:
Illustrative example of subject matter classified in this group:

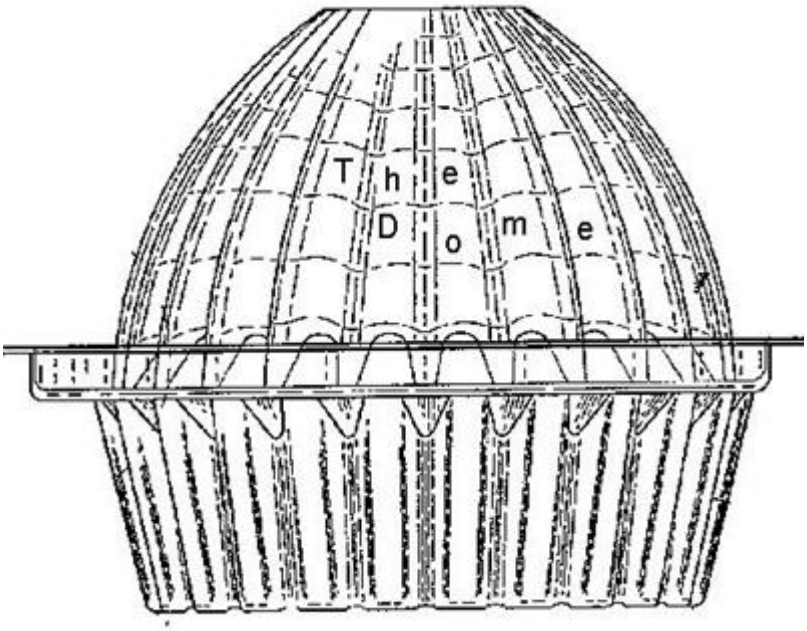

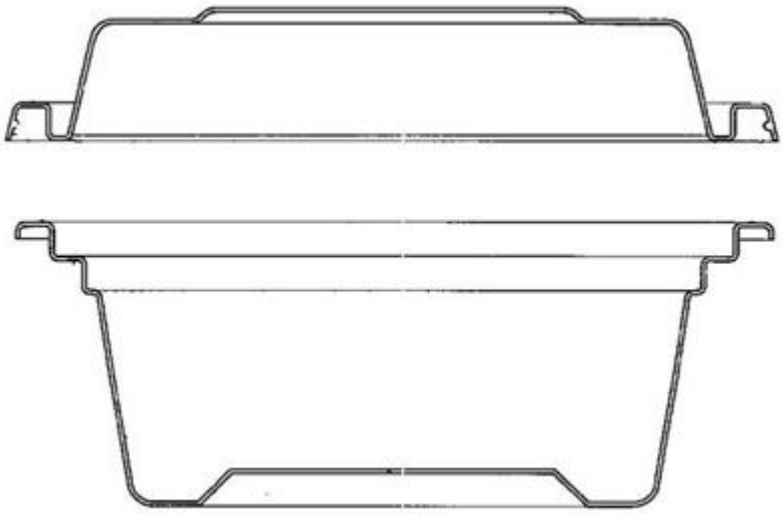

B65D 2543/00361

placed on a tray like container

Definition statement

This subclass/group covers:
Illustrative example of subject matter classified in this group:

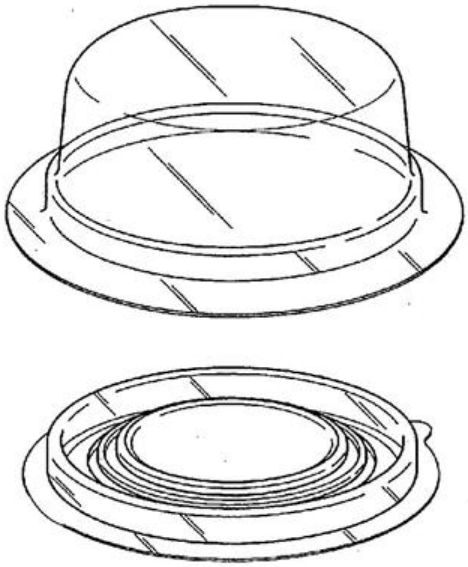

B65D 2543/0037

Flexible or deformable

Definition statement

This subclass/group covers:

Illustrative example of subject matter classified in this group:

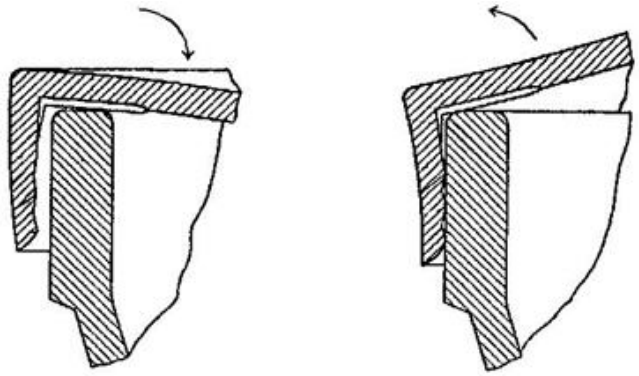

References relevant to classification in this group

This subclass/group does not cover:

Hinged lids made of two (or more) hinged parts	B65D 43/161

Informative references

Attention is drawn to the following places, which may be of interest for search:

Made of two parts (or more) hinged one to another	B65D 2543/00379

B65D 2543/00379

hinged or articulated, i.e. made of two or more parts hinged one to another

Definition statement

This subclass/group covers:

Illustrative example of subject matter classified in this group:

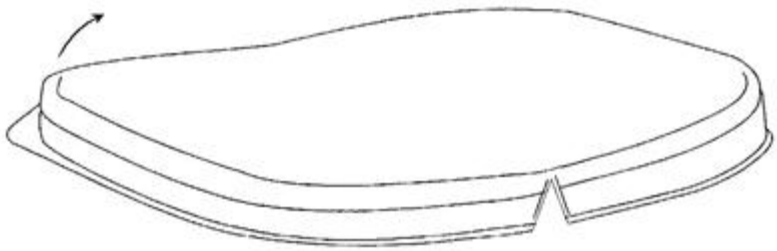

B65D 2543/00388

Bent or angled, i.e. central part presents two main planes

Definition statement

This subclass/group covers:
Illustrative example of subject matter classified in this group:

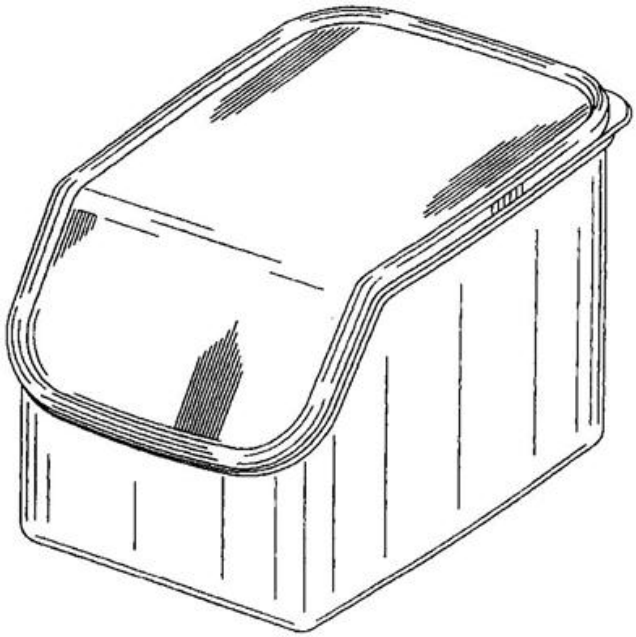

B65D 2543/00398

Reinforcing ribs in the central part of the closure

Definition statement

This subclass/group covers:
Illustrative example of subject matter classified in this group:

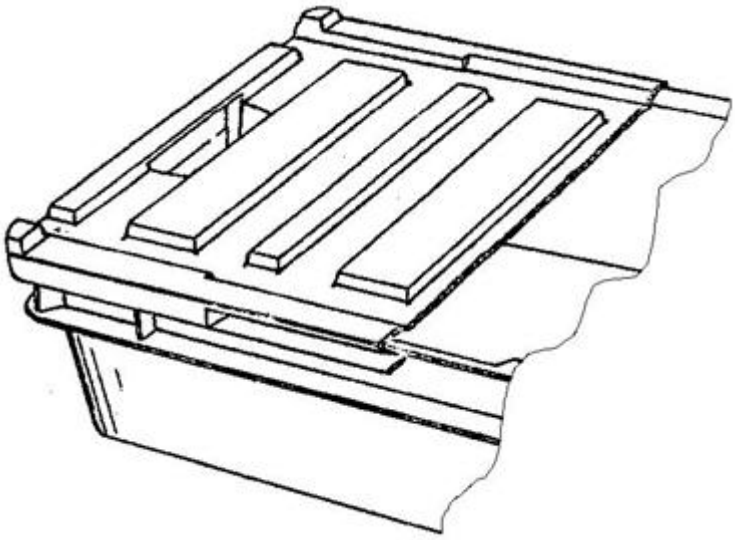

B65D 2543/00407

radial

Definition statement

This subclass/group covers:
Illustrative example of subject matter classified in this group:

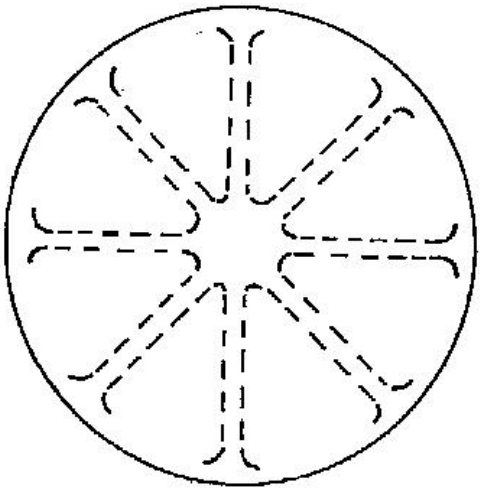

B65D 2543/00416

circular

Definition statement

This subclass/group covers:
Illustrative example of subject matter classified in this group:

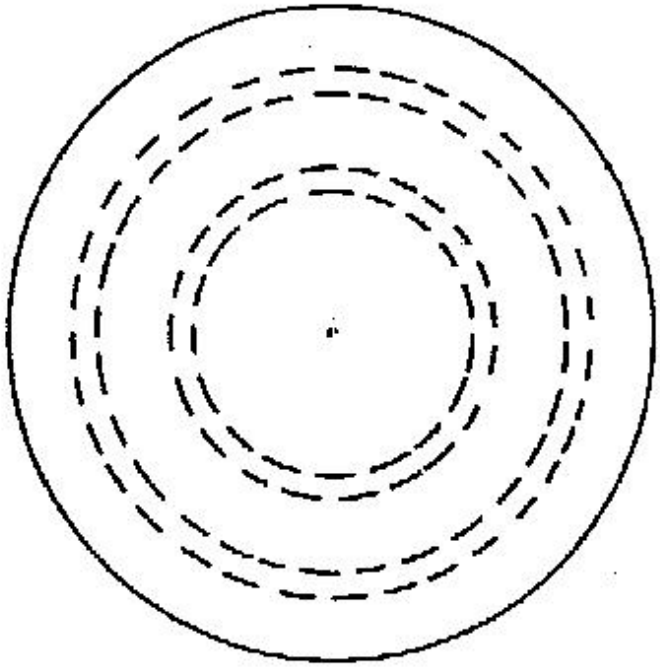

B65D 2543/00425

Lids or covers welded or adhered to the container

Definition statement

This subclass/group covers:
Illustrative example of subject matter classified in this group:

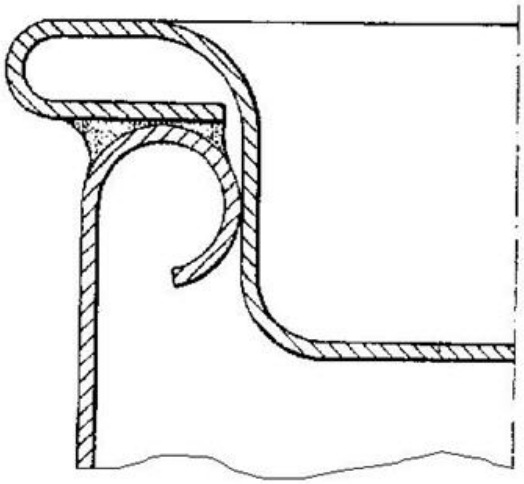

B65D 2543/00435

Lids secured to an intermediate ring or like annular member fixed to the container mouth

Definition statement

This subclass/group covers:

Illustrative example of subject matter classified in this group:

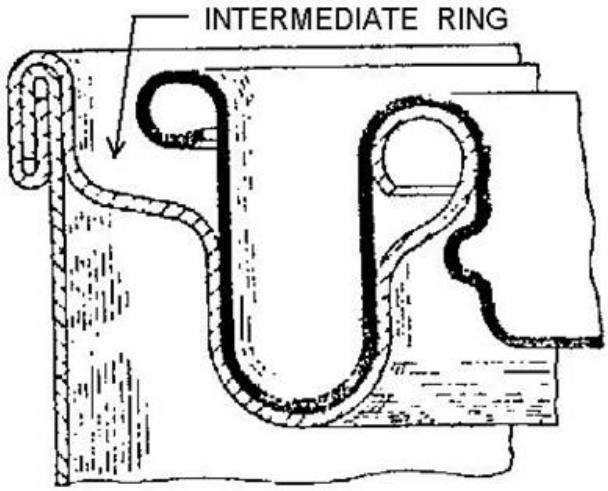

Informative references

Attention is drawn to the following places, which may be of interest for search:

Local reinforcements	B65D 7/48

B65D 2543/00462

peripheral U-shaped channel of the lid

Definition statement

This subclass/group covers:

Illustrative example of subject matter classified in this group:

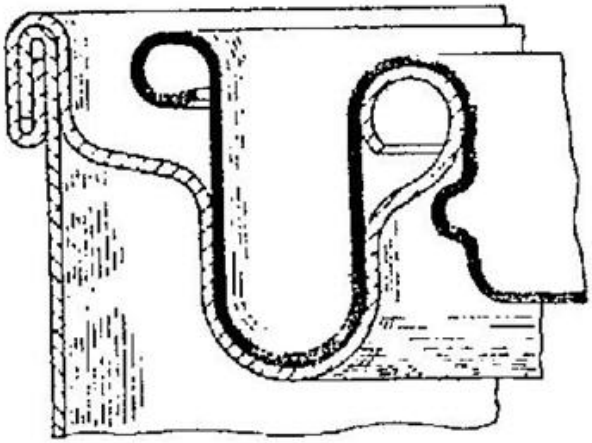

B65D 2543/00472

Skirt

Definition statement

This subclass/group covers:
Illustrative example of subject matter classified in this group:

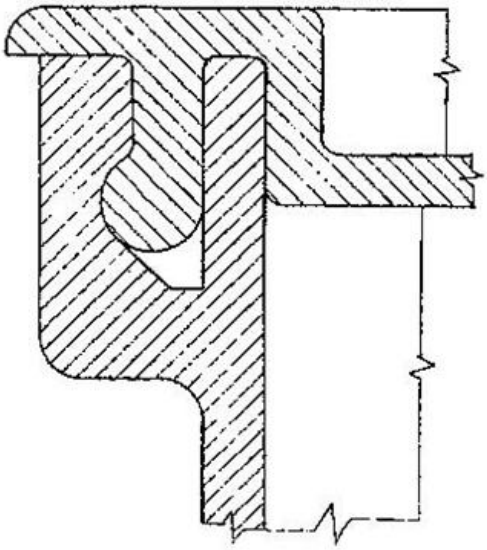

B65D 2543/0049

on the inside, or a part turned to the inside of the mouth of the container

Definition statement

This subclass/group covers:

Illustrative example of subject matter classified in this group:

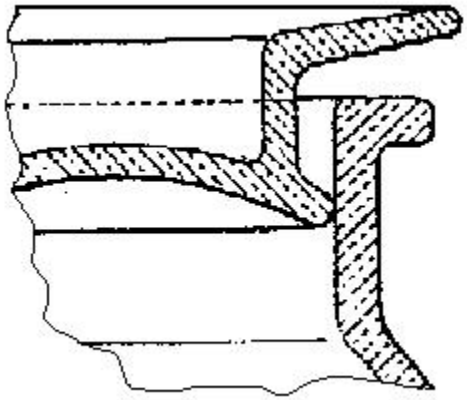

B65D 2543/005

both cup and skirt

Definition statement

This subclass/group covers:
Illustrative example of subject matter classified in this group:

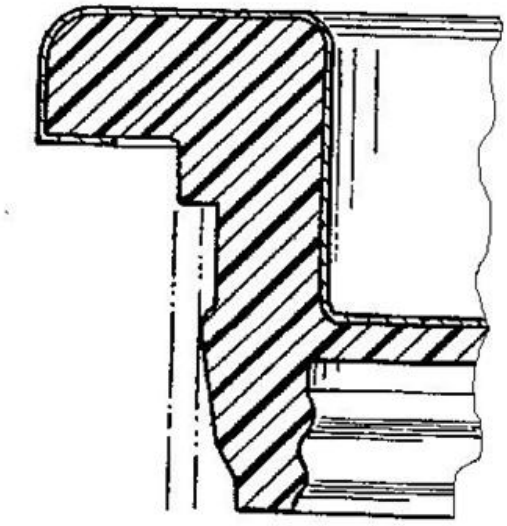

B65D 2543/00509

Cup

Definition statement

This subclass/group covers:
Illustrative example of subject matter classified in this group:

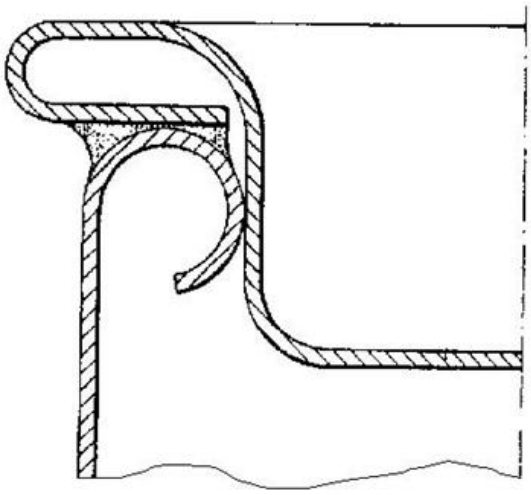

B65D 2543/00518

Skirt

Definition statement

This subclass/group covers:
Illustrative example of subject matter classified in this group:

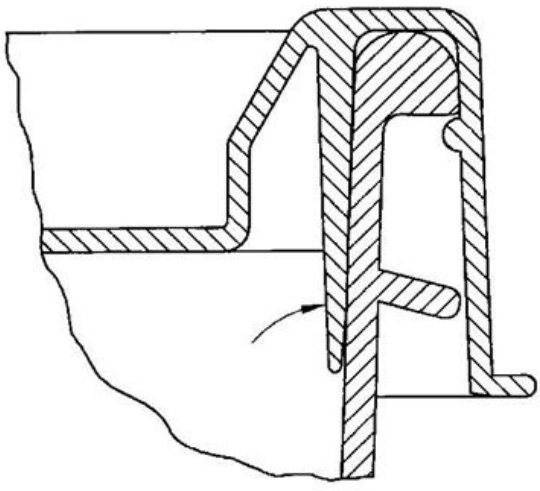

B65D 2543/00555

on both the inside and the outside

Relationship between large subject matter areas

Documents must also have the codes B65D 2543/0049+ and B65D 2543/00537.

B65D 2543/00564

indirect by means of a gasket or similar intermediate ring

Definition statement

This subclass/group covers:

.

Illustrative example of subject matter classified in this group:

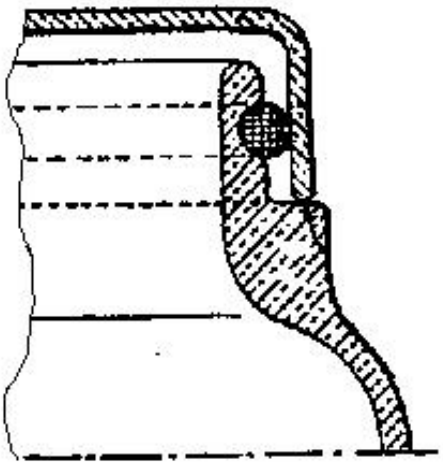

B65D 2543/00583

Means for limiting the axial insertion of the lid on the container

Definition statement

This subclass/group covers:

Illustrative example of subject matter classified in this group:

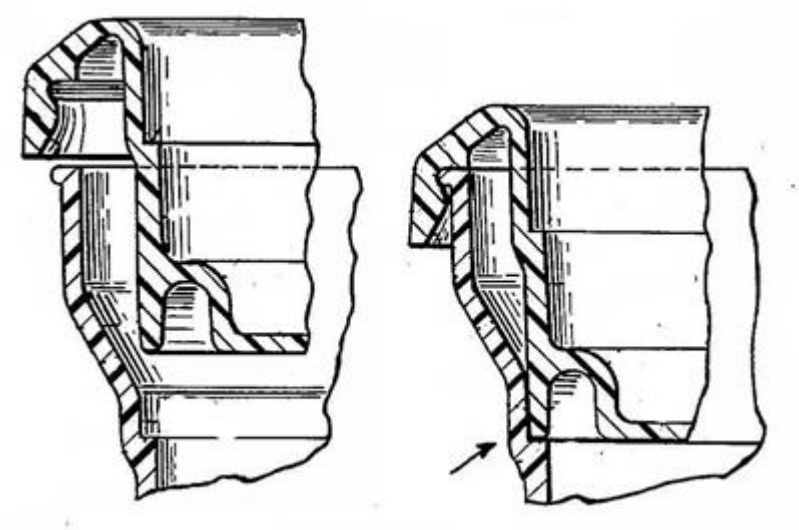

B65D 2543/0062

Groove or hollow bead

Definition statement

This subclass/group covers:
Illustrative example of subject matter classified in this group:

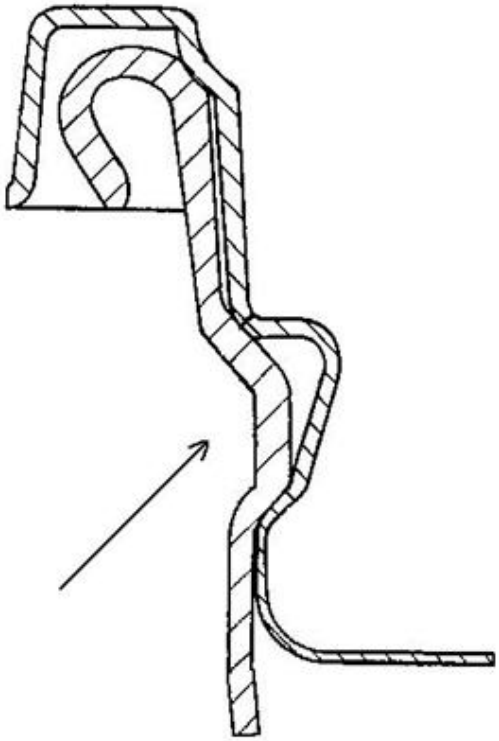

B65D 2543/00629

Massive bead

Definition statement

This subclass/group covers:
Illustrative example of subject matter classified in this group:

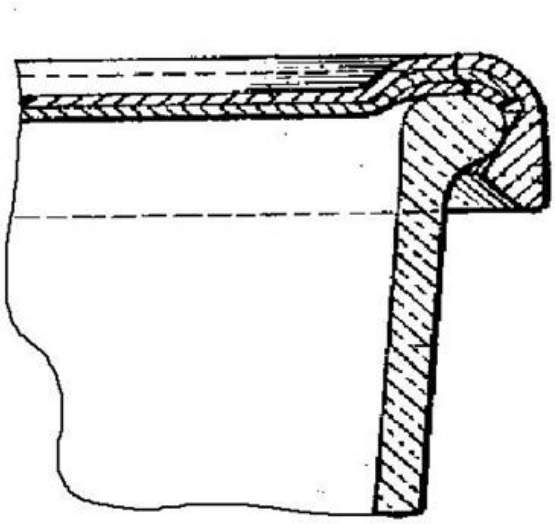

B65D 2543/00638

Rolled edge

Definition statement

This subclass/group covers:
Illustrative example of subject matter classified in this group:

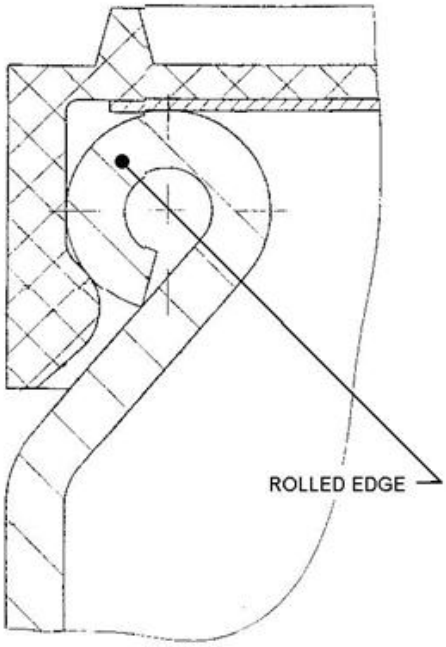

B65D 2543/00648

Flange or lip

Definition statement

This subclass/group covers:
Illustrative example of subject matter classified in this group:

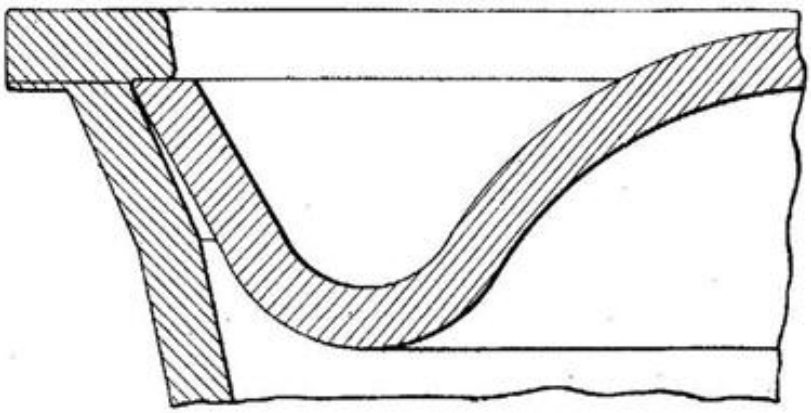

B65D 2543/00657

U-shaped or inverted U

Definition statement

This subclass/group covers:

Illustrative example of subject matter classified in this group:

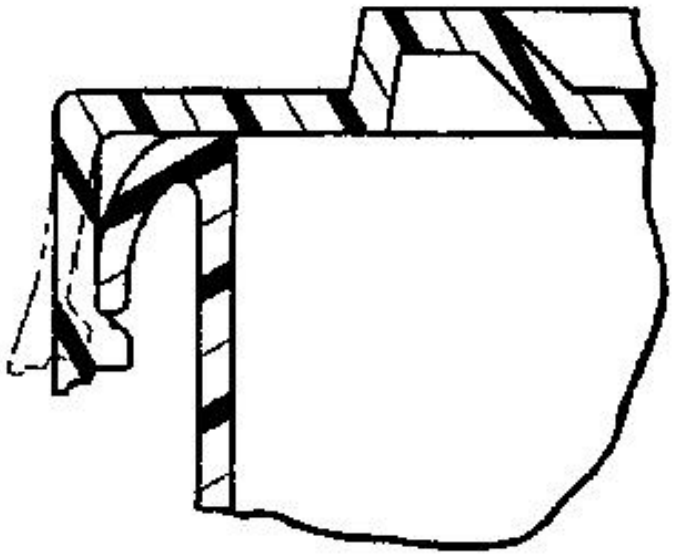

B65D 2543/00666

Hole

Definition statement

This subclass/group covers:
Illustrative example of subject matter classified in this group:

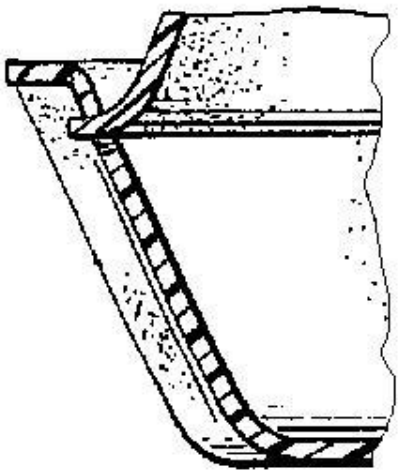

B65D 2543/00731

Groove or hollow bead

Definition statement

This subclass/group covers:
Illustrative example of subject matter classified in this group:

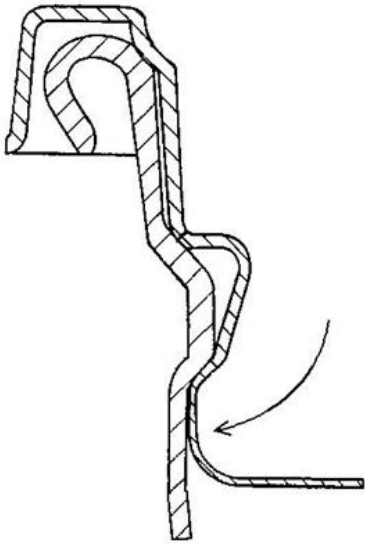

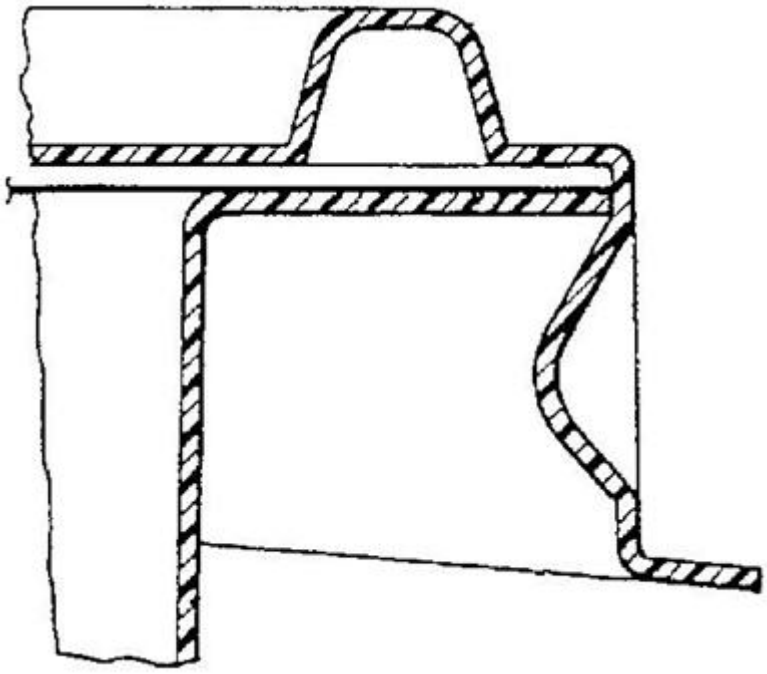

B65D 2543/0074

Massive bead

Definition statement

This subclass/group covers:
Illustrative example of subject matter classified in this group:



B65D 2543/0075

Rolled edge

Definition statement

This subclass/group covers:
Illustrative example of subject matter classified in this group:

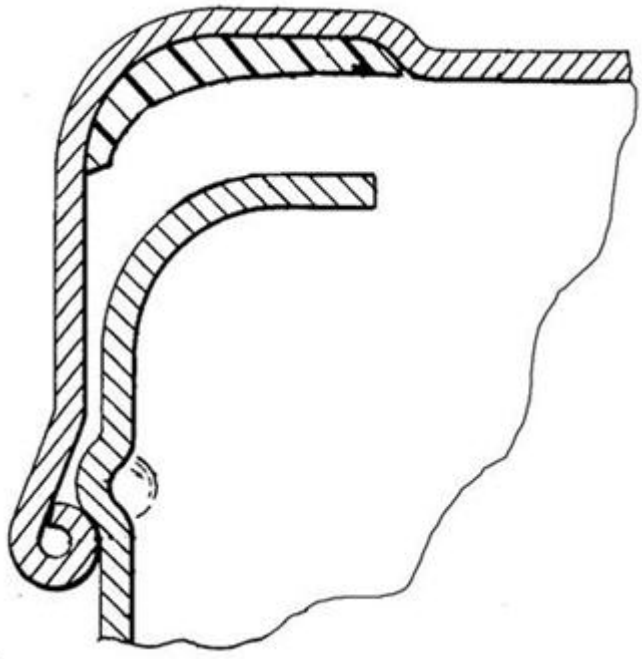

B65D 2543/00768

U-shaped or inverted U

Definition statement

This subclass/group covers:
Illustrative example of subject matter classified in this group:

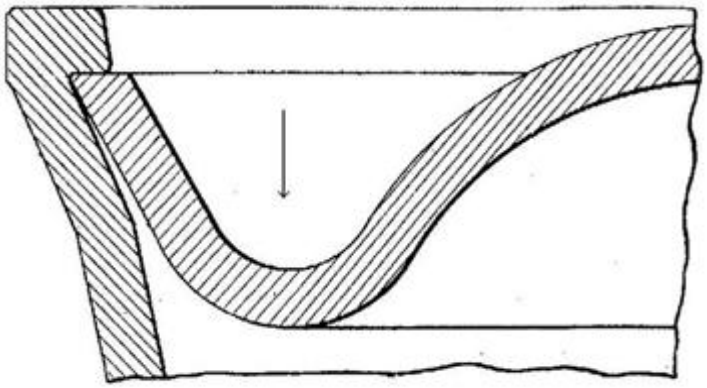

B65D 2543/00777

Hole

Definition statement

This subclass/group covers:
Illustrative example of subject matter classified in this group:

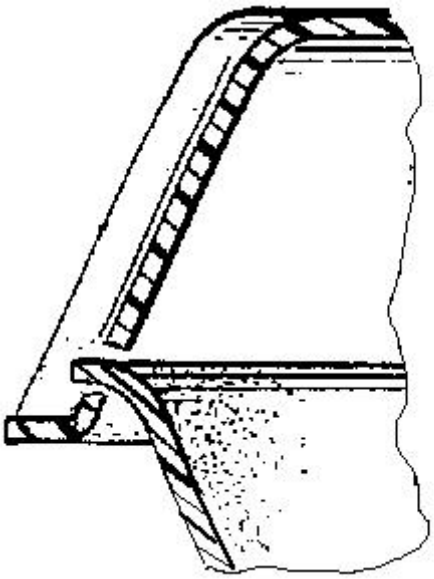

B65D 2543/00805

Segments

Definition statement

This subclass/group covers:
Illustrative example of subject matter classified in this group:

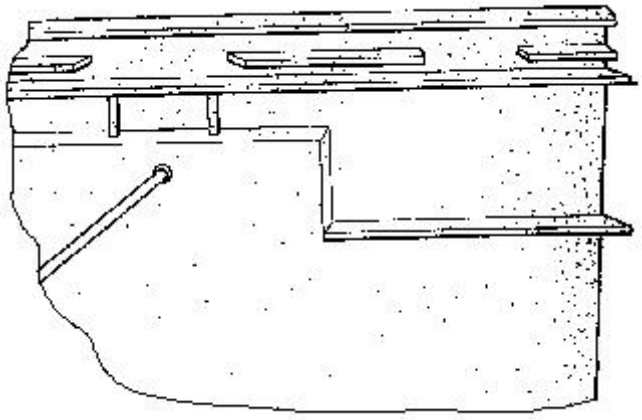

B65D 2543/00842

outside of the lid

Definition statement

This subclass/group covers:
Illustrative example of subject matter classified in this group:

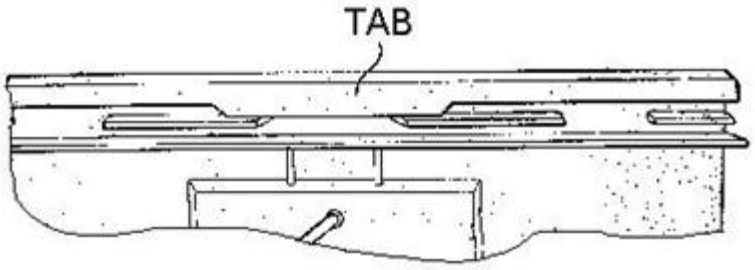

B65D 2543/00851

on the central part of the lid

Definition statement

This subclass/group covers:
Illustrative example of subject matter classified in this group:

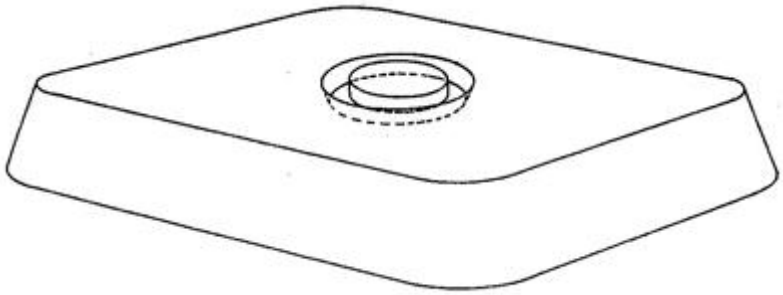

References relevant to classification in this group

This subclass/group does not cover:

Facilitating lifting or suspending of the container	B65D 51/242

B65D 2543/0087

outside of the lid

Definition statement

This subclass/group covers:
Illustrative example of subject matter classified in this group:

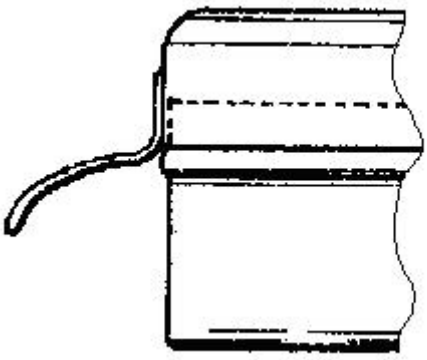

B65D 2543/00879

on the central part of the lid

Definition statement

This subclass/group covers:
Illustrative example of subject matter classified in this group:

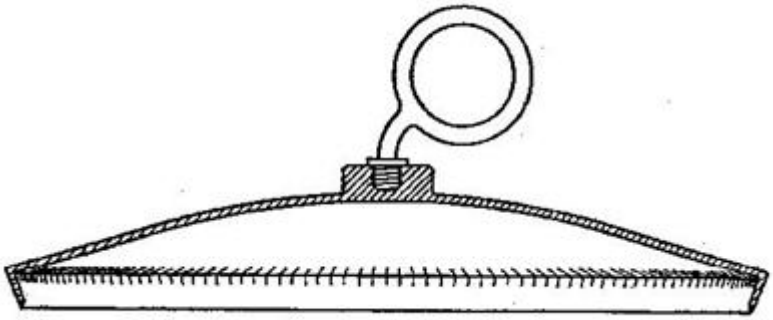

References relevant to classification in this group

This subclass/group does not cover:

Facilitating lifting or suspending of the container	B65D 51/242

Glossary of terms

In this subclass/group, the following terms (or expressions) are used with the meaning indicated:

In this subclass/group, the following terms (or expressions) are used with the meanings indicated:

Central part	part covering the opening of the container

B65D 2543/00888

by applying lever forces

Informative references

Attention is drawn to the following places, which may be of interest for search:

By means of a coin or other tool on grooves or recesses on container or lid	B65D 2543/00898
- directly on two elements of container and lid respectively (GB316200)	B65D 2543/00907

B65D 2543/00898

by means of a coin or other tool in recesses or similar on container or lid

Definition statement

This subclass/group covers:

Illustrative example of subject matter classified in this group:

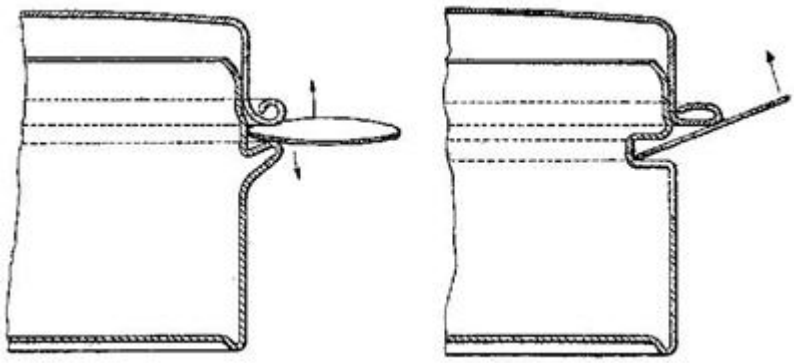

References relevant to classification in this group

This subclass/group does not cover:

Child-proof closures	B65D 50/067

B65D 2543/00907

directly on two elements of container and lid respectively, i.e. using the fingers

Definition statement

This subclass/group covers:

Illustrative example of subject matter classified in this group:

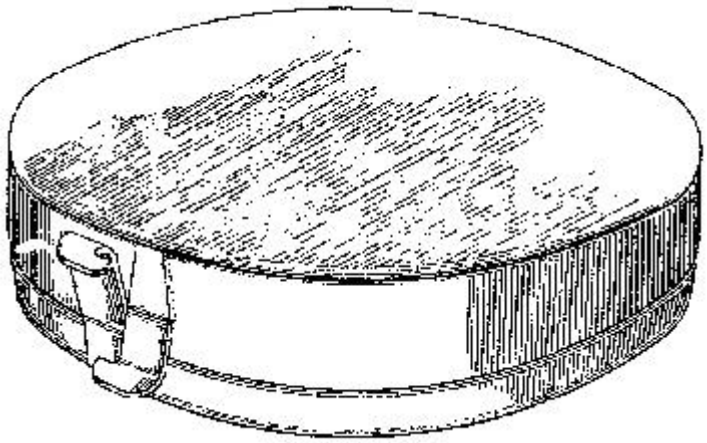

B65D 2543/00916

downward vertical pressure in order to tilt the opposite side of the lid

Definition statement

This subclass/group covers:

Illustrative example of subject matter classified in this group:

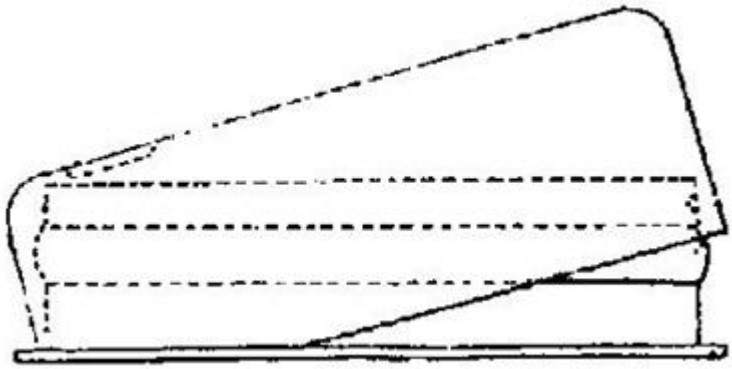

B65D 2543/00925

by applying inwardly directed pressure at two horizontally opposed points

Definition statement

This subclass/group covers:

Illustrative example of subject matter classified in this group:

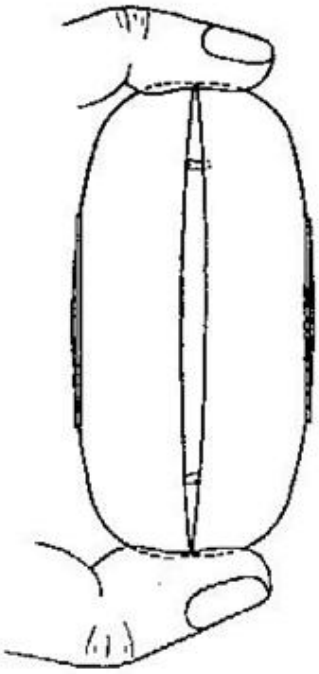

B65D 2543/00935

by depressing the central part at least locally

Definition statement

This subclass/group covers:
Illustrative example of subject matter classified in this group:

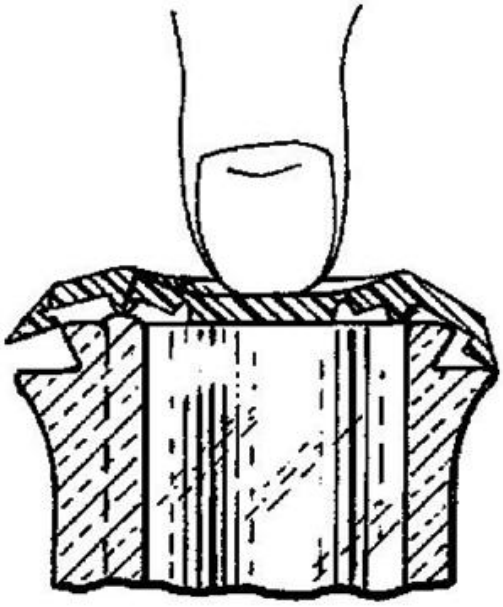

Glossary of terms

In this subclass/group, the following terms (or expressions) are used with the meaning indicated:

In this subclass/group, the following terms (or expressions) are used with the meanings indicated:

Central part	part covering the opening of the container

B65D 2543/00944

Located only on the container, e.g. recesses

Definition statement

This subclass/group covers:

Illustrative example of subject matter classified in this group:

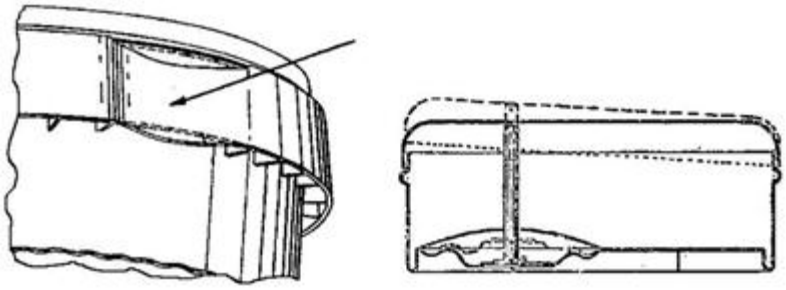

B65D 2543/00953

Sealing means

References relevant to classification in this group

This subclass/group does not cover:

More general application of sealing means	B65D 2251/20

B65D 2543/00962

inserted

References relevant to classification in this group

This subclass/group does not cover:

More general application of sealing means	B65D 2251/205

B65D 2543/00972

Collars or rings

References relevant to classification in this group

This subclass/group does not cover:

More general application of sealing means	B65D 2251/205

B65D 2543/00981

Discs

References relevant to classification in this group

This subclass/group does not cover:

More general application of sealing means	B65D 2251/205

B65D 2563/102

having an integral securing member with only one locking position, i.e. the strap cannot be tightened

Definition statement

This subclass/group covers:

Illustrative example of subject matter classified in this group:

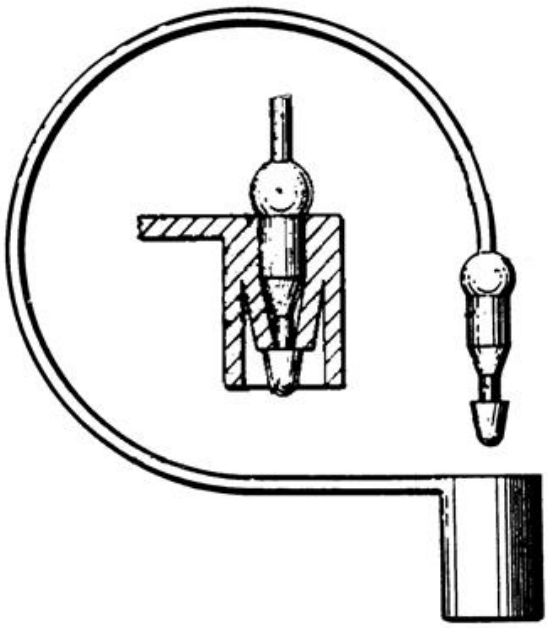

B65D 2563/103

details of the male locking member, e.g. locking teeth on the strap

Definition statement

This subclass/group covers:

Illustrative example of subject matter classified in this group:

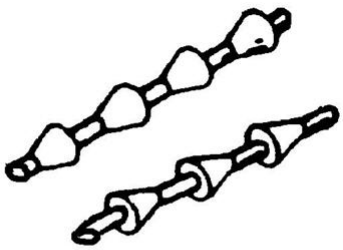

B65D 2563/106

formed as a ladder-like structure

Definition statement

This subclass/group covers:

Illustrative example of subject matter classified in this group:

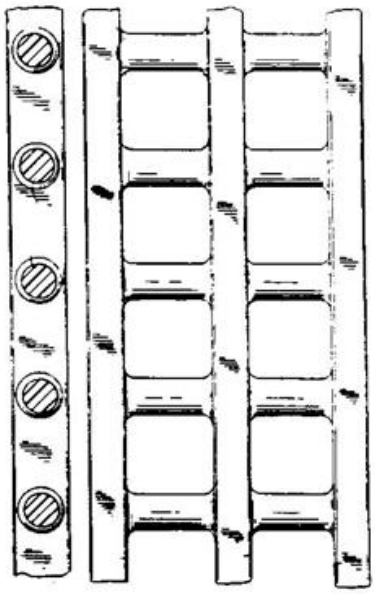

B65D 2571/00043

Intermediate plates or the like

Informative references

Attention is drawn to the following places, which may be of interest for search:

Packages formed by enclosing articles or materials in preformed containers comprising several inner stacked containers with intermediate trays, plates	B65D 2577/046
Packages formed by enclosing articles or materials in preformed containers comprising several inner containers stacked and arranged side by side with intermediate trays	B65D 2577/048

B65D 2571/00055

Clapping elements, also placed on the side

References relevant to classification in this group

This subclass/group does not cover:

Bundles surrounded by carton blanks	B65D 2571/00037

B65D 2571/00067

Local maintaining elements, e.g. partial packaging, shrink packaging, shrink small bands

References relevant to classification in this group

This subclass/group does not cover:

Palletisable loads intermediate plates or the like	B65D 2571/00043
Clapping elements, also placed on the side	B65D 2571/00055

B65D 2571/00074

Stabilising or reinforcing columns

References relevant to classification in this group

This subclass/group does not cover:

Frames, corner posts or pallet converters	B65D 19/385

B65D 2571/0008

Load supporting elements (Not used)

Informative references

Attention is drawn to the following places, which may be of interest for search:

Elements for spacing platforms from supporting surface	B65D 19/40

B65D 2571/00086

Feet or isolated supports, not formed by the articles

References relevant to classification in this group

This subclass/group does not cover:

	L65D571/00P1

B65D 2571/00098

Devices for transporting the load also from above

Informative references

Attention is drawn to the following places, which may be of interest for search:

	L65D19/00Y5K

B65D 2571/00104

Forms or jigs for use in making the load

References relevant to classification in this group

This subclass/group does not cover:

Machines, apparatus or devices for, or methods of, packaging articles or materials; unpacking	B65B

B65D 2571/00111

Arrangements of flexible binders

Special rules of classification within this group

This code is same as B65D 71/02 but used only for palletisable loads

B65D 2571/00117

with protecting or supporting elements arranged between binder and articles or materials, e.g. for preventing chafing of binder

Special rules of classification within this group

This code is same as B65D 71/02 but used only for palletisable loads

B65D 2571/00259

inwardly folded tabs, i.e. elements substantially narrower than the corresponding package dimension

References relevant to classification in this group

This subclass/group does not cover:

Interlocked bundling wrappers or trays	B65D 2571/00154

B65D 2571/00555

Wrapper opening devices

References relevant to classification in this group

This subclass/group does not cover:

Partitions inserted the wrapper	B65D 2571/00401
Shape of the formed wrapper with inserted end walls	B65D 2571/00777

B65D 2571/00666

formed from two or more sheets

References relevant to classification in this group

This subclass/group does not cover:

Partitions inserted the wrapper	B65D 2571/00401
Shape of the formed wrapper with inserted end walls	B65D 2571/00777

B65D 2571/00858

Devices for locating the wrapped bundle in a container, e.g. in a bottle crate

References relevant to classification in this group

This subclass/group does not cover:

Details of crates	B65D 2571/00129

B65D 2575/361

Details

Special rules of classification within this group

Not used

B65D 2575/363

by sliding one sheet relative to the other

Definition statement

This subclass/group covers:
Illustrative example of subject matter classified in this group:

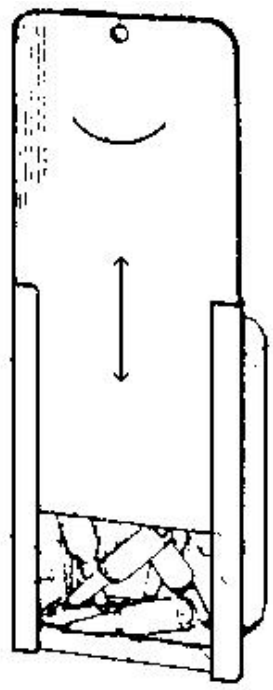

B65D 2575/365

partially or totally releasing one sheet from the other

Definition statement

This subclass/group covers:
Illustrative example of subject matter classified in this group:

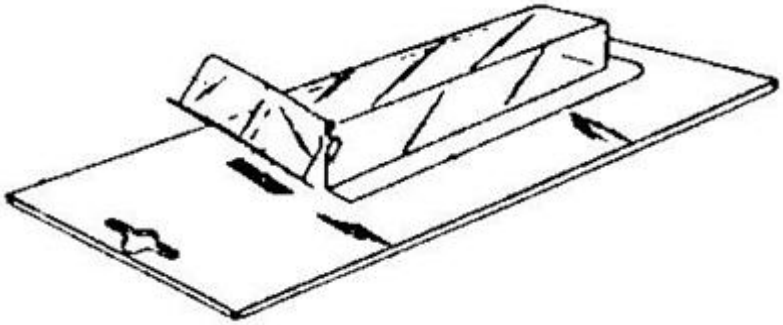

B65D 2575/366

through a preformed opening in the recessed sheet, e.g. the opening being defined by weakened lines

Definition statement

This subclass/group covers:
Illustrative example of subject matter classified in this group:

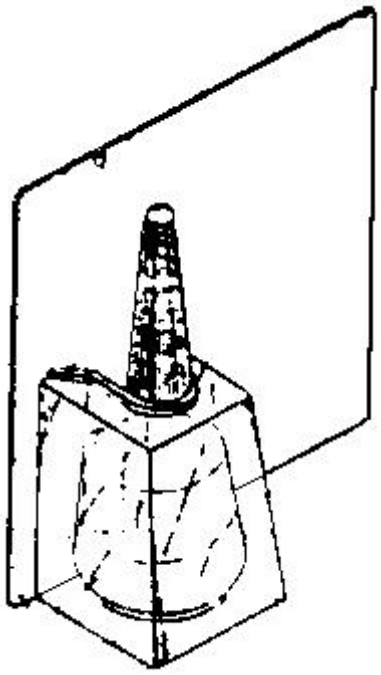

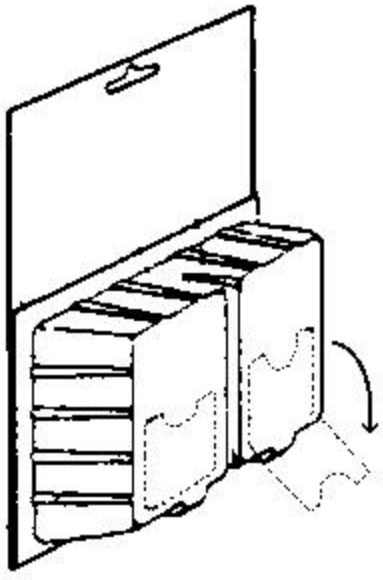

B65D 2575/367

through a preformed opening in the flat sheet, e.g. the opening being defined by weakened lines

Definition statement

This subclass/group covers:

Illustrative example of subject matter classified in this group:

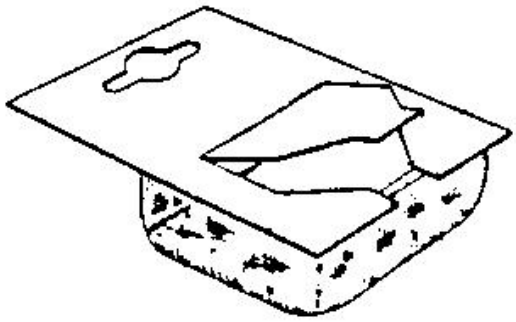

B65D 2575/583

the non-integral spout having an elongate cross-sectional shape, e.g. canoe or boat shaped

Definition statement

This subclass/group covers:

Illustrative example of subject matter classified in this group:

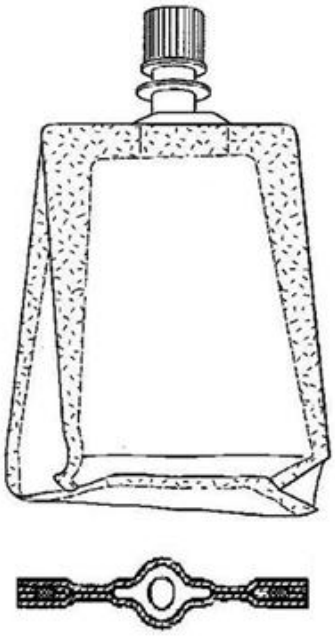

B65D 2575/586

with means for reclosing

Definition statement

This subclass/group covers:
Illustrative example of subject matter classified in this group:

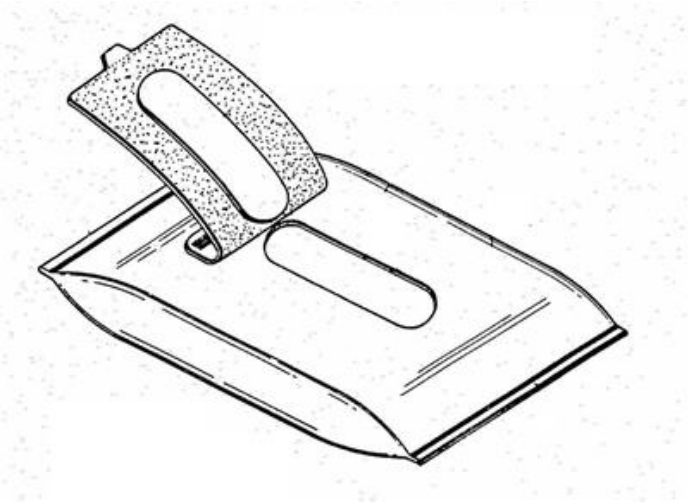

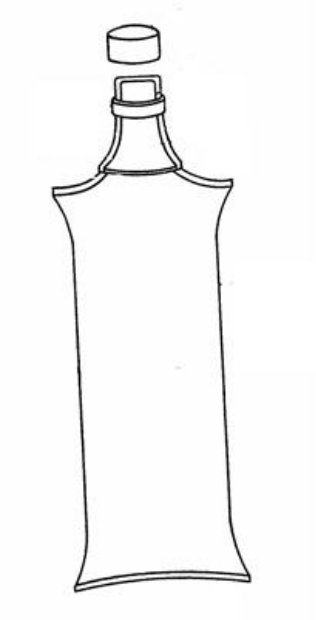

References relevant to classification in this group

This subclass/group does not cover:

Articles or materials enclosed between two opposed sheets or blanks having their margins united with reclosing means	B65D 2575/368

B65D 2577/2008

Rigid cutting or tearing devices

Informative references

Attention is drawn to the following places, which may be of interest for search:

Rigid cutting or tearing devices	B65D 77/40

B65D 2577/2083

in container flange

Definition statement

This subclass/group covers:

Illustrative example of subject matter classified in this group:

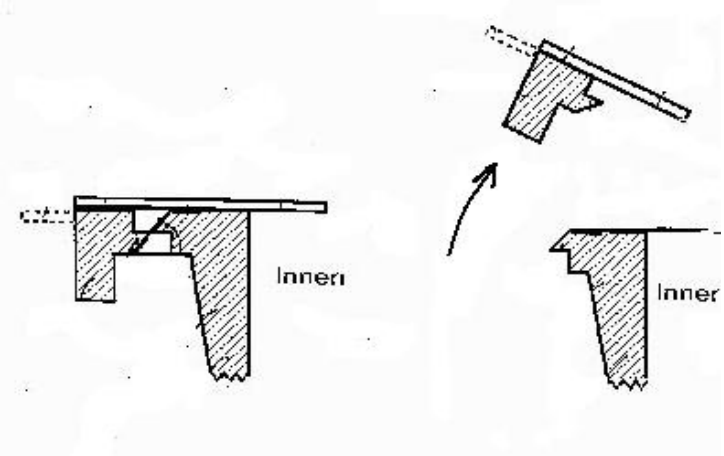

B65D 2577/2091

in cover

Definition statement

This subclass/group covers:
Illustrative example of subject matter classified in this group:

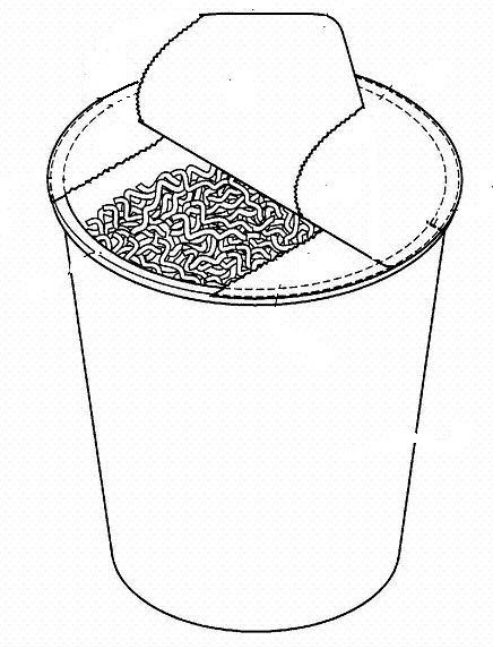

References relevant to classification in this group

This subclass/group does not cover:

Precut holes or weakened zones for draining or discharging the liquid contents	B65D 2231/025

B65D 2581/057

Edge protectors adapted to protect the circular edge of rolls of material, e.g. coils of sheet metal

Definition statement

This subclass/group covers:

Illustrative example of subject matter classified in this group:

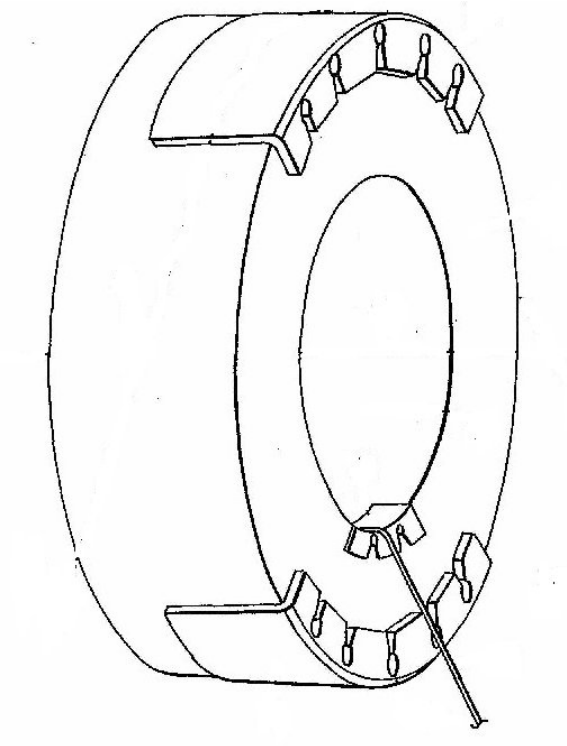

B65D 2581/058

Edge or corner protectors connected to each other by separate elements

Definition statement

This subclass/group covers:

Illustrative examples of subject matter classified in this group:

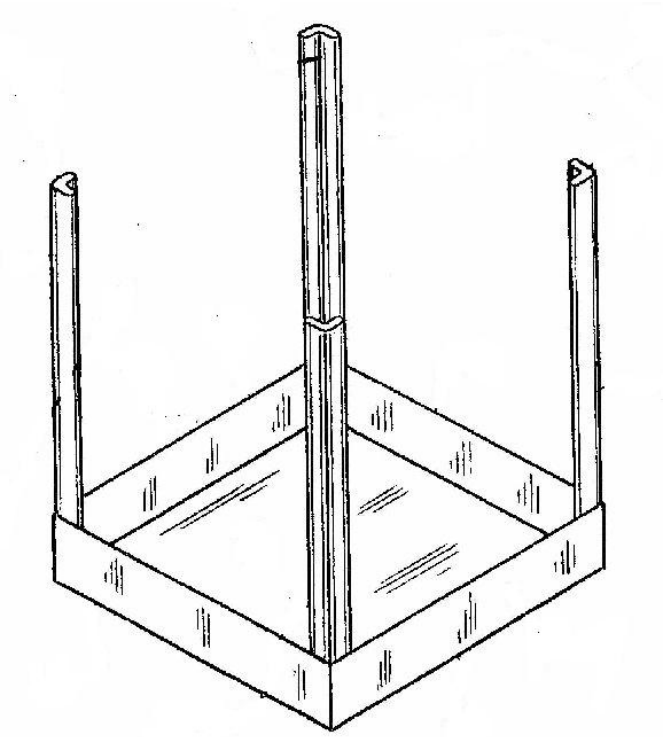

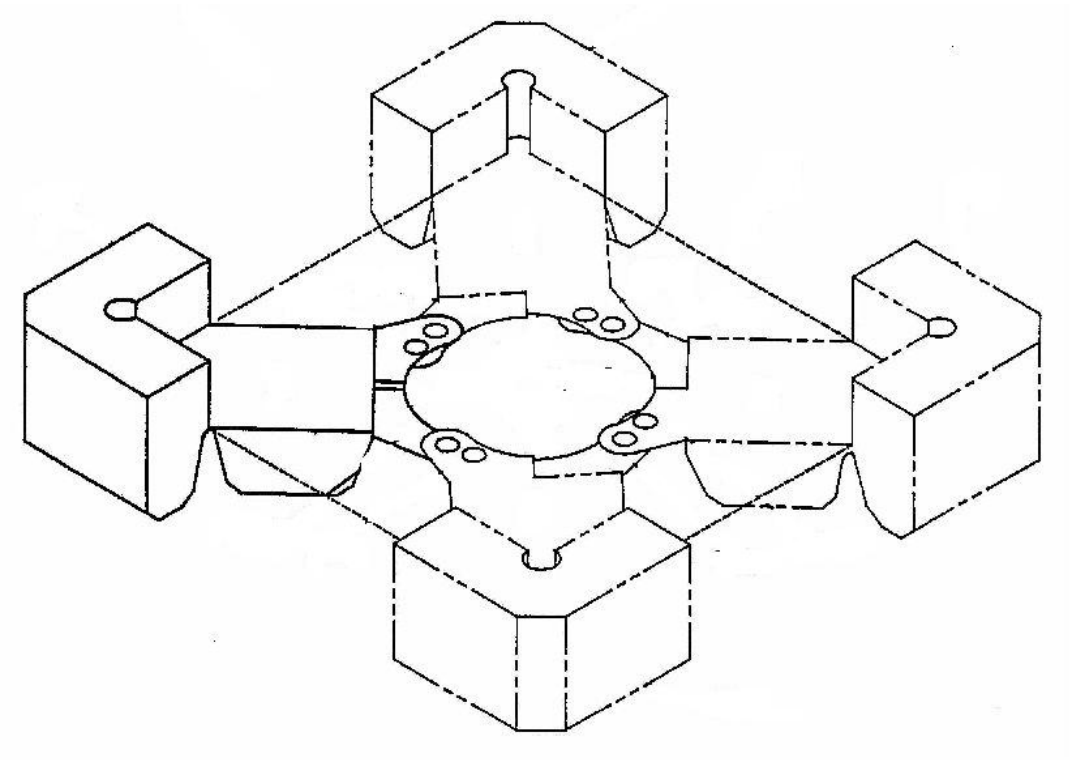

B65D 2581/3406

Pizza or bread

References relevant to classification in this group

This subclass/group does not cover:

	81/36P

B65D 2581/3409

Brewing coffee or tea

Definition statement

This subclass/group covers:
Illustrative example of subject matter classified in this group:

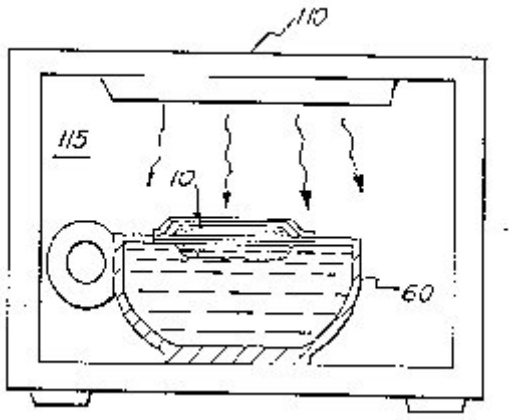

B65D 2581/3412

Cooking fried food (B65D 2581/3416 and B65D 2581/3417 take precedence)

References relevant to classification in this group

This subclass/group does not cover:

Cooking meat products	B65D 2581/3416
Bacon	B65D 2581/3417

B65D 2581/3413

Fish sticks or french fries

Definition statement

This subclass/group covers:
Illustrative example of subject matter classified in this group:

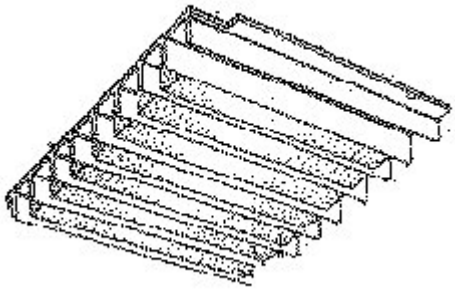

B65D 2581/3421

Cooking pop-corn

Definition statement

This subclass/group covers:
Illustrative example of subject matter classified in this group:

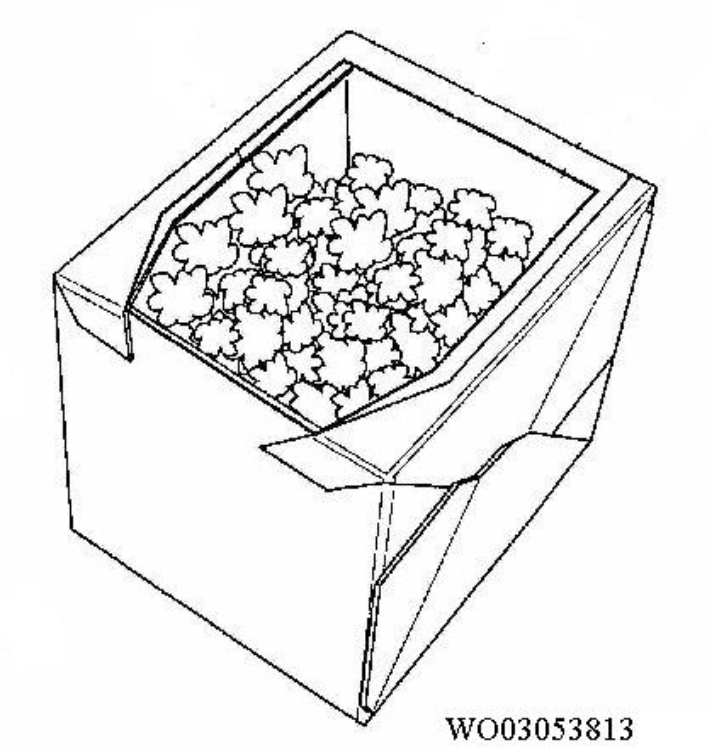

References relevant to classification in this group

This subclass/group does not cover:

Pop-corn bags	B65D 81/3469

B65D 2581/3431

the secondary product, e.g. fudge, being heated over ice-cream

Definition statement

This subclass/group covers:

Illustrative example of subject matter classified in this group:

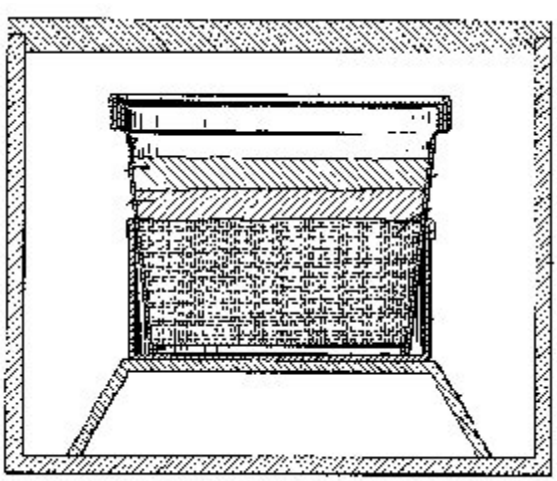

B65D 2581/3432

the secondary product, e.g. flavouring sauce, being enclosed in a second package

Definition statement

This subclass/group covers:

Illustrative example of subject matter classified in this group:

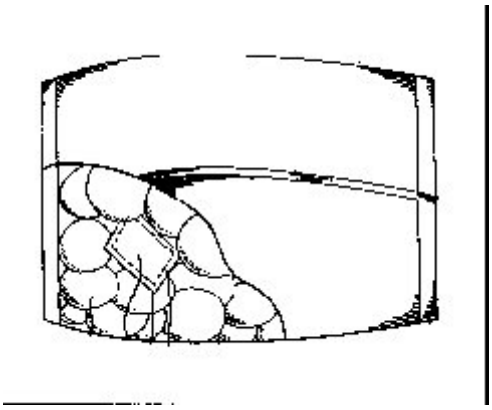

B65D 2581/344

Geometry or shape factors influencing the microwave heating properties

Definition statement

This subclass/group covers:

Illustrative example of subject matter classified in this group:

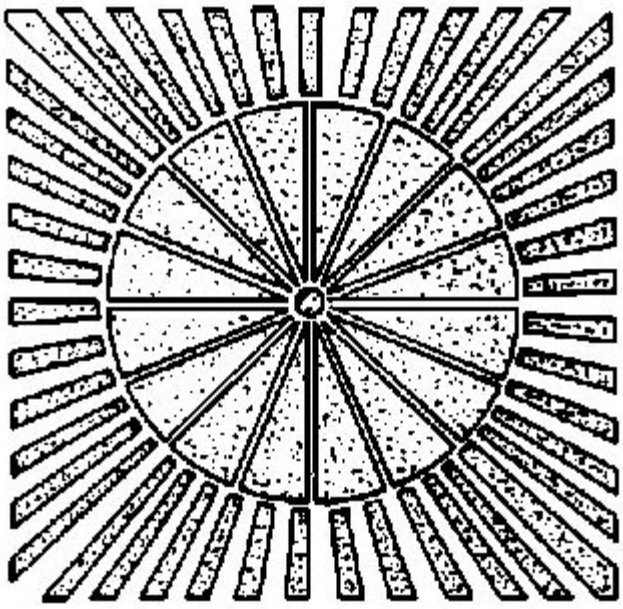

Special rules of classification within this group

This code is always used in combination with the B65D 2581/3486 codes.

B65D 2581/3441

3-D geometry or shape factors, e.g. depth-wise

Definition statement

This subclass/group covers:
Illustrative example of subject matter classified in this group:

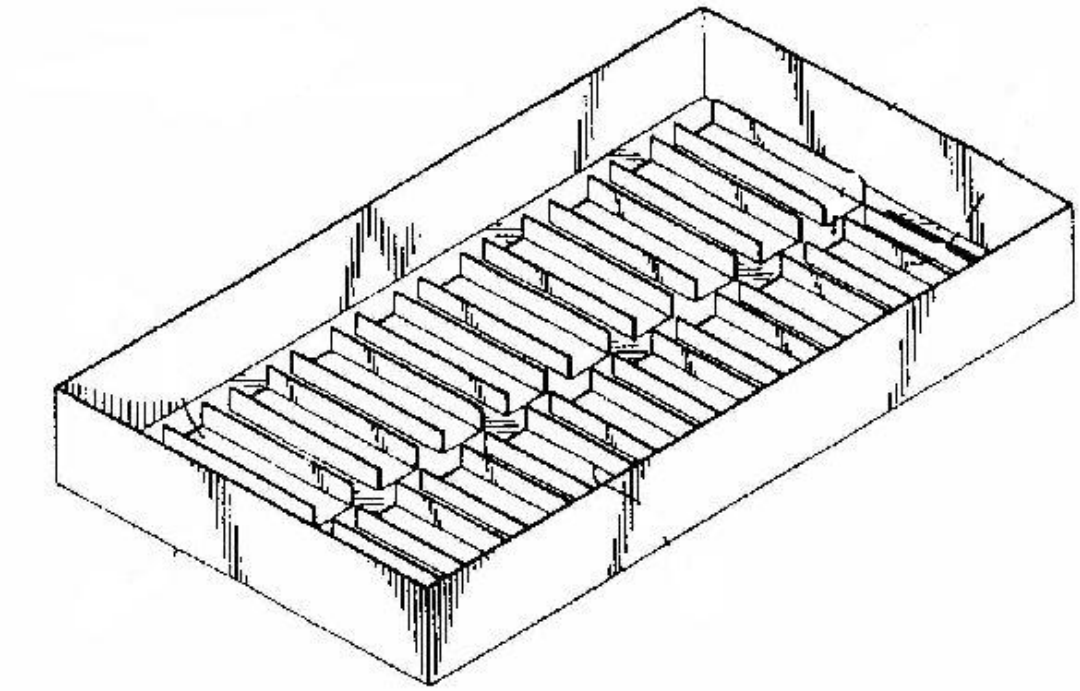

Special rules of classification within this group

This code is always used in combination with the B65D 2581/3486 codes.

B65D 2581/3443

Shape or size of microwave reactive particles in a coating or ink

Special rules of classification within this group

This code is always used in combination with the B65D 2581/3486 codes.

B65D 2581/3452

Packages having a plurality of microwave reactive layers, i.e. multiple or overlapping microwave reactive layers

Definition statement

This subclass/group covers:

Illustrative example of subject matter classified in this group:

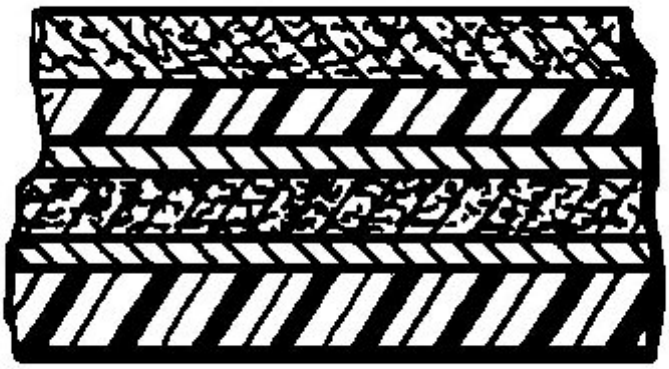

B65D 2581/3456

Means for holding the contents at a distance from the base of the package, e.g. raised islands or protrusions (B65D 2581/3459 takes precedence)

Definition statement

This subclass/group covers:

Illustrative example of subject matter classified in this group:

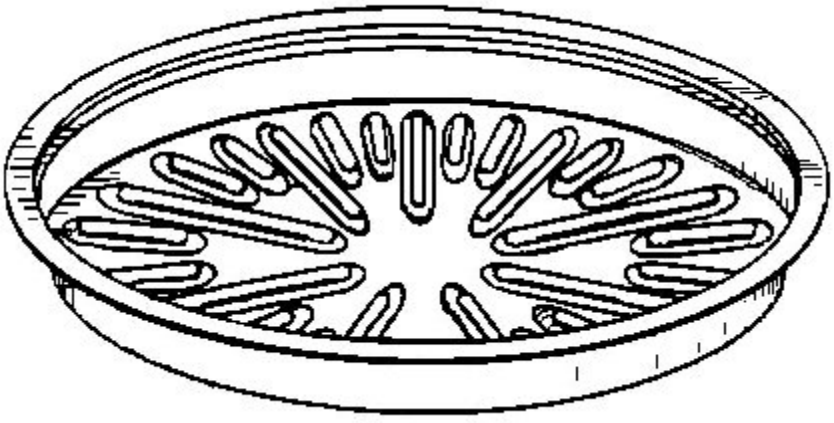

References relevant to classification in this group

This subclass/group does not cover:

Means for holding the package at a distance from the microwave oven floor	B65D 2581/3459

B65D 2581/3458

Convective heating chambers, e.g. hot air channels

Definition statement

This subclass/group covers:
Illustrative example of subject matter classified in this group:

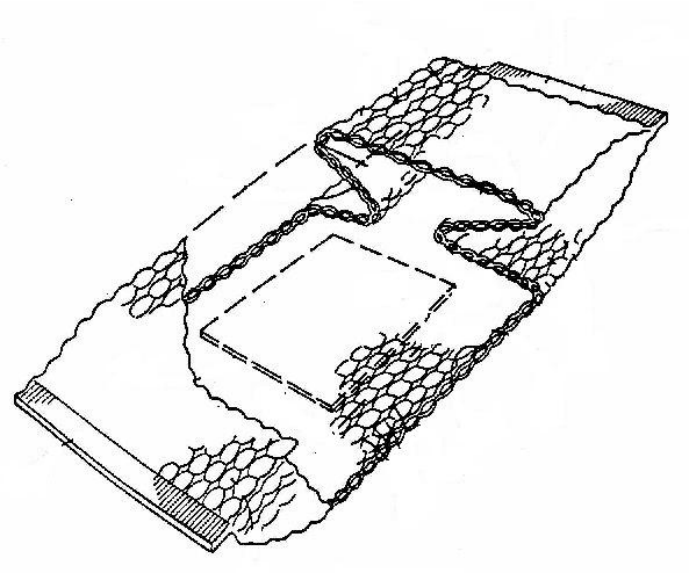

B65D 2581/346

integral to the package, e.g. the package is transformed into a stand

Definition statement

This subclass/group covers:
Illustrative example of subject matter classified in this group:

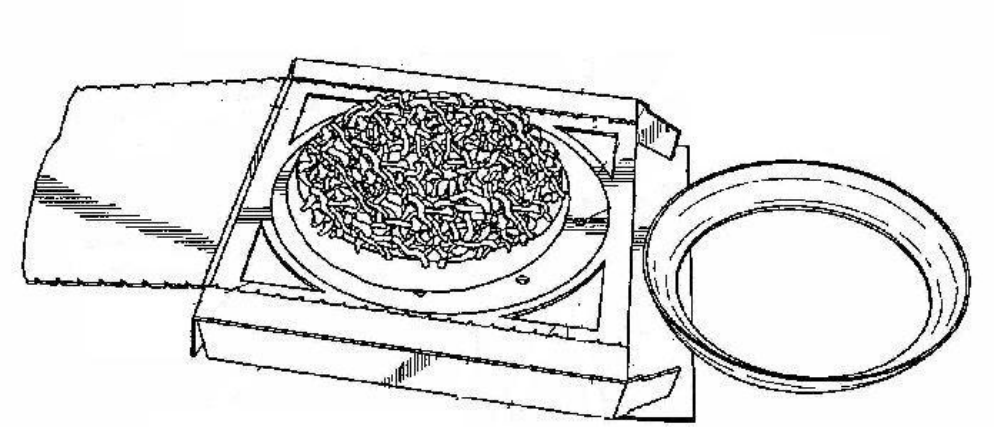

B65D 2581/3462

separate from the package, e.g. separate stands

Definition statement

This subclass/group covers:
Illustrative example of subject matter classified in this group:

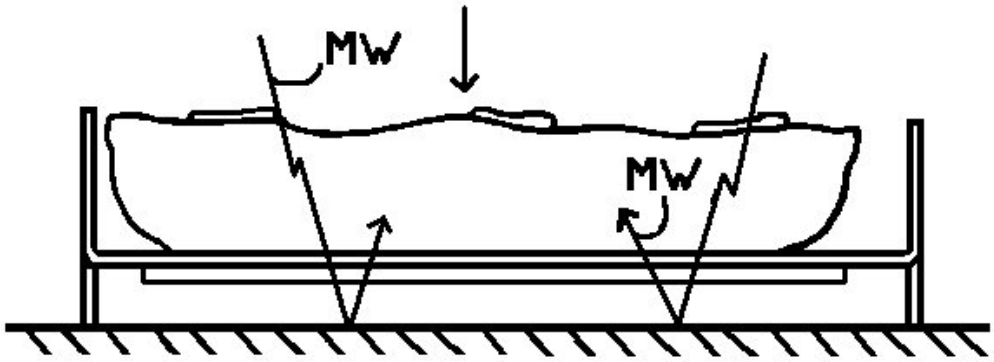

B65D 2581/3487

Reflection, Absorption and Transmission (RAT) properties of the microwave reactive package

Definition statement

This subclass/group covers:
Illustrative example of subject matter classified in this group:

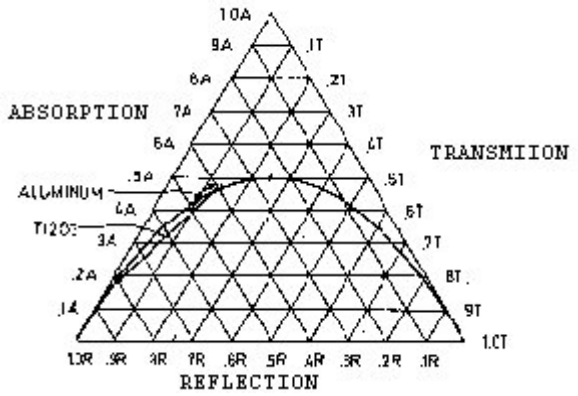

B65D 2583/005

Dispensers provided with a replaceable cartridge, recharge or pouch located within the dispenser

Definition statement

This subclass/group covers:

Illustrative example of subject matter classified in this group:

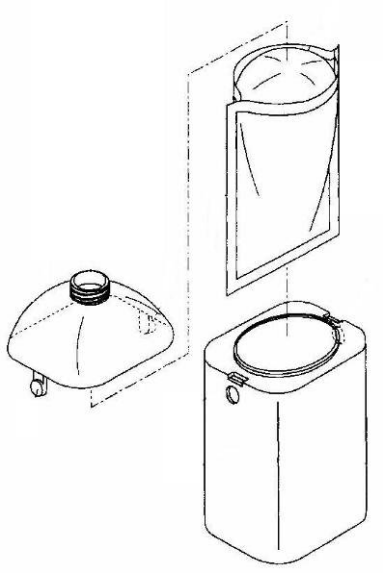

B65D 2583/04

For dispensing annular, disc-shaped or spherical or like small articles or tablets

Special rules of classification within this group

NOT USED

B65D 2583/0459

Flat circular container with rotating parts

Special rules of classification within this group

Documents which are not for the B65D 83/0454 are classified here.

B65D 2583/0468

of drawer-and-shell type

References relevant to classification in this group

This subclass/group does not cover:

Flat container with slide cover	B65D 2583/0454

B65D 2583/0481

One reciprocating action, e. g. to or from

References relevant to classification in this group

This subclass/group does not cover:

One rotational action of a cylindrical, disc-like or sphere-like element around its own axis	B65D 2583/049

B65D 2583/08

for dispensing thin flat articles in succession

Special rules of classification within this group

Not used.

B65D 2583/082

Details relating to containers for dispensing thin flat articles in succession

Special rules of classification within this group

Not used.

B65D 2583/087

with cutting edges being impregnated or coated

Definition statement

This subclass/group covers:
Illustrative example of subject matter classified in this group:

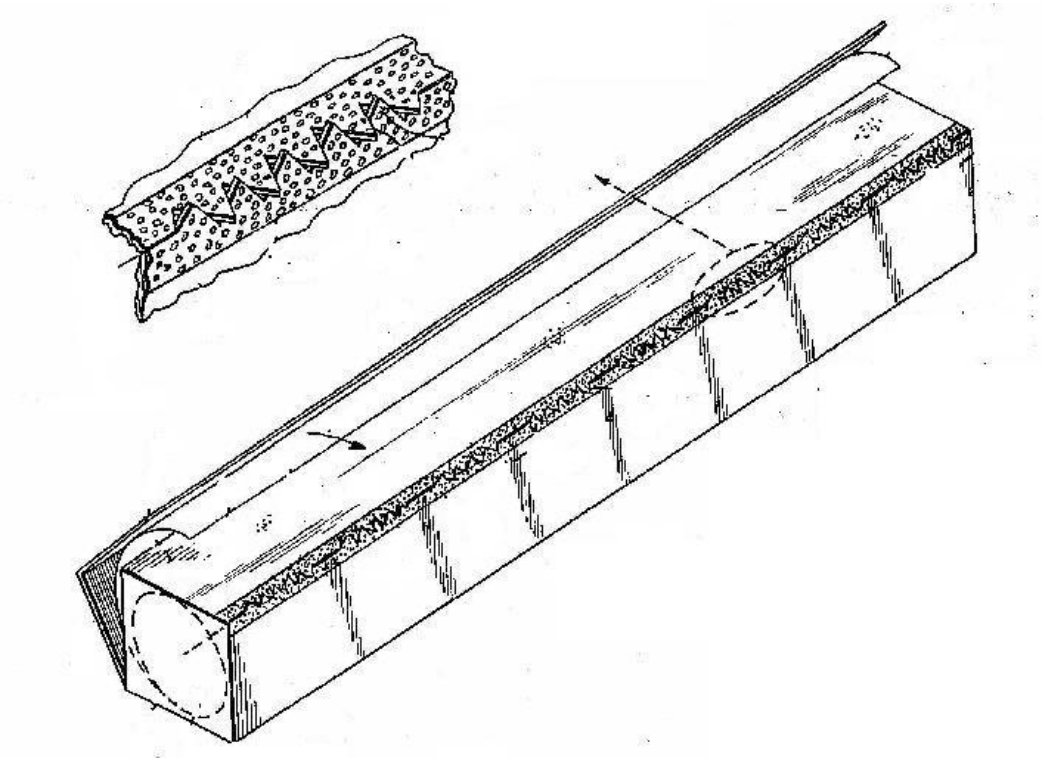

L65D 583/14Y5

Connectors, e. g. for tyres, or actuators connected to the aerosol container by a flexible tube

Informative references

Attention is drawn to the following places, which may be of interest for search:

Auto-repairing or self-sealing arrangement or agents	B29C 73/16

Special rules of classification within this group

Moved to **B65D83/14Z6**.

B65D 2585/085

Shirred sausage casings

References relevant to classification in this group

This subclass/group does not cover:

Shirred sausage casing details consult	A22C 13/023

B65D 2585/366

Pizza

Informative references

Attention is drawn to the following places, which may be of interest for search:

	B65D81/34H100B1

B65D 2585/545

Contact lenses

References relevant to classification in this group

This subclass/group does not cover:

Traditional contact lens cases, i.e. not used for packaging	A45C 11/005

B65D 2585/56

for medicinal tablets or pills

References relevant to classification in this group

This subclass/group does not cover:

With means for dispensing	B65D 2583/04

Special rules of classification within this group

B65D85/56 does not exist as a class

B65D 2585/6882

vehicle parts

Informative references

Attention is drawn to the following places, which may be of interest for search:

Wiper blades; wiper blades per se	B60S 1/38

B65D 2585/86

for electrical components (small electrical components attached to cards, sheets or webs B65D 73/02; for articles particularly sensitive to damage by shock or pressure B65D 2585/30; for ampoules, lamp bulbs, electronic valves or tubes L65D585/42)

Special rules of classification within this group

B65D85/86 exists as IPC class

B65D 2585/88

Batteries

Special rules of classification within this group

B65D85/88 exists as IPC class