H01P

WAVEGUIDES; RESONATORS, LINES, OR OTHER DEVICES OF THE WAVEGUIDE TYPE (operating at optical frequencies G02B; aerials H01Q; {modulating electromagnetic waves in transmission line, waveguide, cavity resonator or radiation field of aerial H03C 7/02}; networks comprising lumped impedance elements H03H)

Definition statement

This place covers:

Passive devices which have electrical dimensions comparable with the working wavelength, and which operate at frequencies up to but not including optical frequencies, e.g. microwave, and their manufacture.

Auxiliary devices of waveguide type such as filters, phase shifters, non-reciprocal devices, polarisation rotators.

Tubular waveguides and transmission lines such as strip lines, microstrips, coaxial lines, dielectric waveguides.

Devices for coupling between waveguides, transmission lines or waveguide type devices.

Resonators of the waveguide type.

Delay lines of the waveguide type.

Apparatus or processes specially adapted for manufacturing waveguides, transmission lines, or waveguide type devices.

Relationships with other classification places

Waveguides and waveguide type devices are commonly associated with antennas and aerials, these are classified in H01Q.

H01P is concerned with individual circuit components, or basic combinations of them. More complicated networks with lumped impedance elements are classified in H03H.

References

Limiting references

This place does not cover:

Devices operating at optical frequencies	G02B

Informative references

Attention is drawn to the following places, which may be of interest for search:

Coaxial cables	H01B 11/18
Transit-time tubes	H01J 23/00
Aerials	H01Q
Quasi-optical devices	H01Q 15/00
Line connectors	H01R
Cable fittings	H02G 15/00
Networks comprising lumped impedance elements	H03H

Glossary of terms

In this place, the following terms or expressions are used with the meaning indicated:

Auxiliary devices	Devices which perform an operation other than the mere simple transmission of energy.
Waveguide type	As applied to transmission lines, this term includes only high-frequency coaxial cables or Lecher lines, and as applied to resonators, delay lines, or other devices, this term includes all devices having distributed inductance and capacitance.

Synonyms and Keywords

In patent documents, the following abbreviations are often used:

Non-reciprocal devices	Components such as circulators or isolators, using the propagation properties of ferrites.

H01P 1/00

Auxiliary devices (coupling devices of the waveguide type H01P 5/00)

Definition statement

This place covers:

Devices which perform an operation other than the mere simple transmission of energy.

H01P 1/005

{Diode mounting means}

Definition statement

This place covers:

Any kind of transmission line provided with diodes, where the use of the diodes will change the transmission line behaviour.

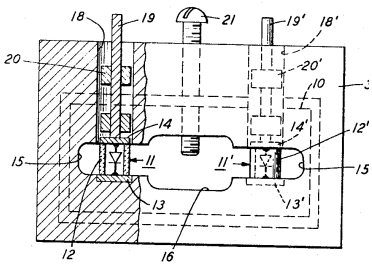

References

Informative references

Attention is drawn to the following places, which may be of interest for search:

Transference of modulation using distributed inductance capacitance	H03D 9/06
By means of diodes	H03D 9/0608
Mounted on a stripline circuit	H03D 9/0633
Located in a hollow waveguide	H03D 9/0641

H01P 1/02

Bends; Corners; Twists

Definition statement

This place covers:

Illustrative example of subject matter classified in H01P 1/02:

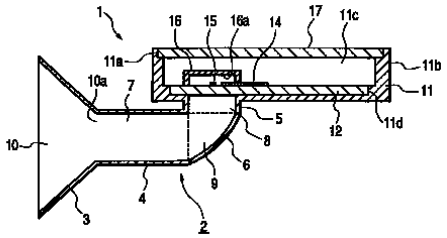

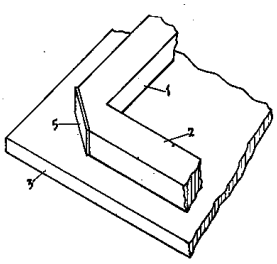

H01P 1/022

{in waveguides of polygonal cross-section (H01P 1/065 takes precedence)}

Definition statement

This place covers:

Illustrative examples of subject matter classified in H01P 1/022:

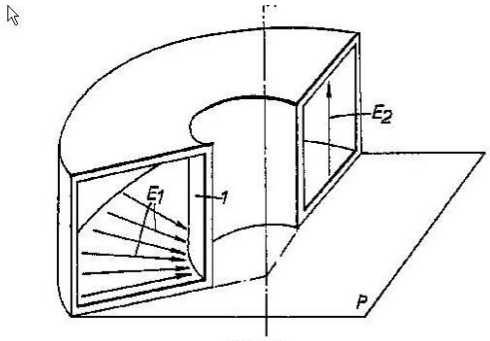

FIG. 1.

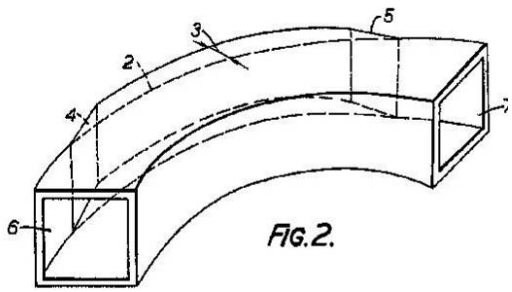

FIG. 2.

H01P 1/025

{in the E-plane}

Definition statement

This place covers:

Illustrative examples of subject matter classified in H01P 1/025:

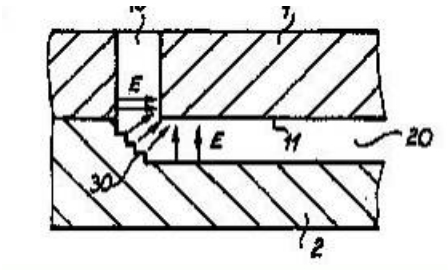

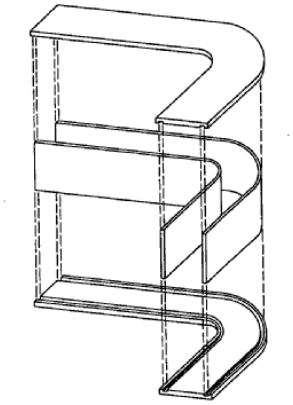

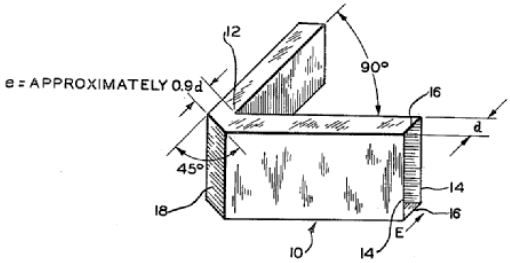

H01P 1/027

{in the H-plane}

Definition statement

This place covers:

Illustrative example of subject matter classified in H01P 1/027:

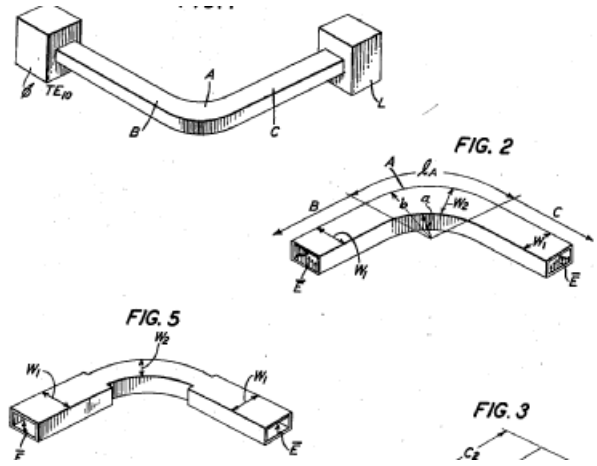

H01P 1/04

Fixed joints ({pipe joints F16L}; line connectors H01R; cable fittings H02G 15/00)

Definition statement

This place covers:

Non movable joints, direct (non-electromagnetic) couplings between transmissions lines and/or circuits:

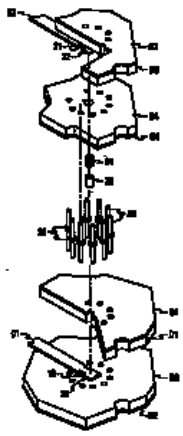

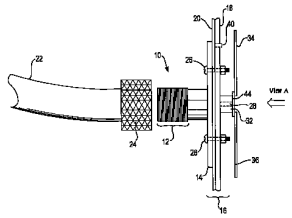

Special rules of classification

The waveguides should have the same dimensions, otherwise H01P 5/00.

Transitions between lines of different kinds: H01P 5/08

H01P 1/042

{Hollow waveguide joints}

Definition statement

This place covers:

Illustrative example of subject matter classified in H01P 1/042:

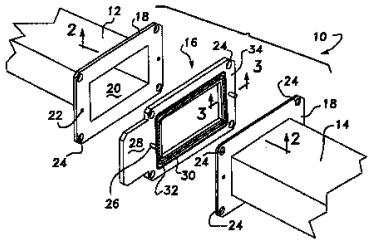

H01P 1/045

{Coaxial joints}

References

Informative references

Attention is drawn to the following places, which may be of interest for search:

Coaxial connectors for coaxial cables	**H01R17/12**

Special rules of classification

Illustrative example of subject matter classified in H01P 1/045:

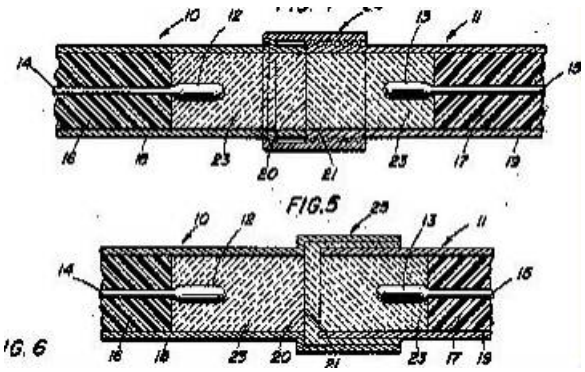

H01P 1/047

{Strip line joints}

Definition statement

This place covers:

Coplanar waveguide/slot joints; multi-level connections (also via short coaxial section).

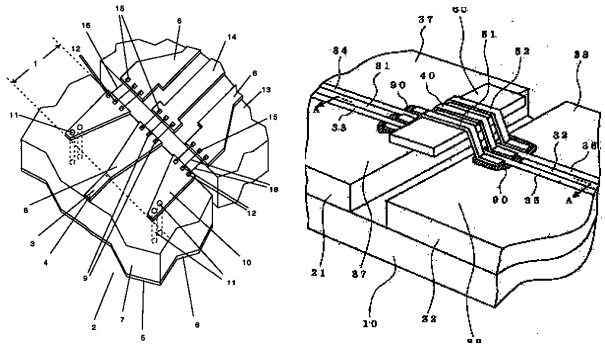

H01P 1/06

Movable joints, e.g. rotating joints

Definition statement

This place covers:

Movable connections between transmission lines and/or other microwave elements; chokes, seals, electromagnetical coupling.

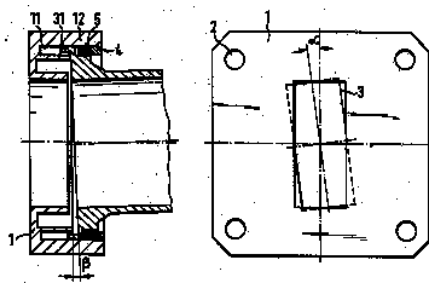

Special rules of classification

Variable degree of coupling between transmission lines: H01P 5/04; Flexible waveguides: H01P 3/14.

H01P 1/061

{the relative movement being a translation along an axis common to at least two rectilinear parts, e.g. expansion joints}

Definition statement

This place covers:

Illustrative example of subject matter classified in H01P 1/061:

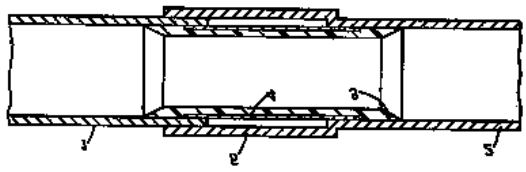

H01P 1/062

{the relative movement being a rotation}

Definition statement

This place covers:

Illustrative example of subject matter classified in H01P 1/062:

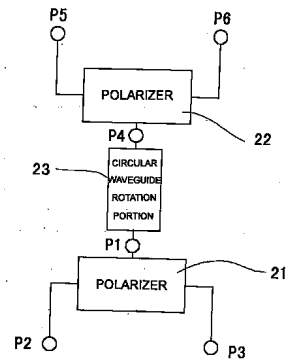

Special rules of classification

Using mechanical rotation for polarisation rotation: H01P 1/165.

H01P 1/064

{the axis of rotation being perpendicular to the transmission path, e.g. hinge joint}

Definition statement

This place covers:

Illustrative example of subject matter classified in H01P 1/064 :

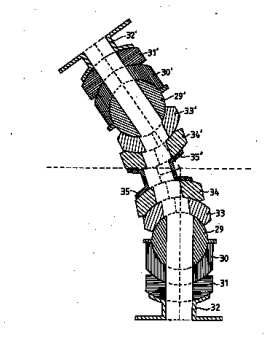

H01P 1/065

{the axis of rotation being parallel to the transmission path, e.g. stepped twist}

Definition statement

This place covers:

Illustrative examples of subject matter classified in H01P 1/065:

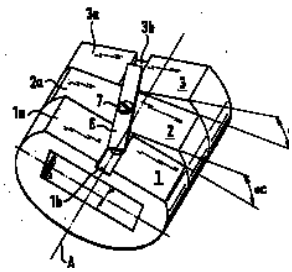

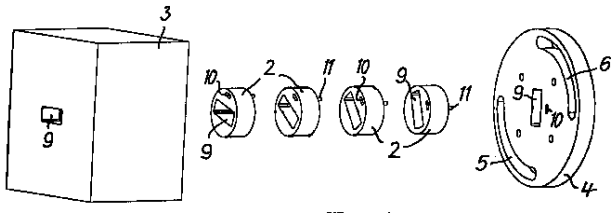

H01P 1/066

{with an unlimited angle of rotation}

Definition statement

This place covers:

Illustrative examples of subject matter classified in H01P 1/062:

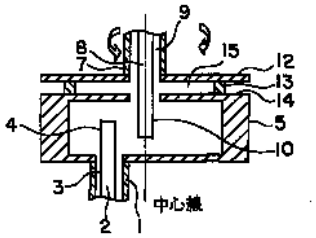

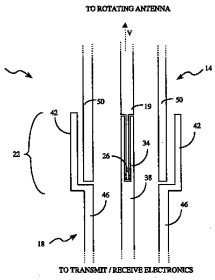

H01P 1/067

{the energy being transmitted in only one line located on the axis of rotation}

Definition statement

This place covers:

Illustrative example of subject matter classified in H01P 1/067:

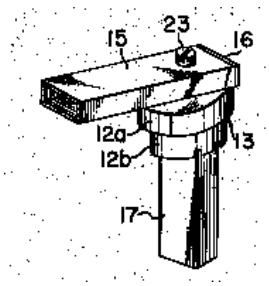

H01P 1/068

{the energy being transmitted in at least one ring-shaped transmission line located around the axis of rotation, e.g. "around the mast" rotary joint (H01P 1/069 takes precedence; coaxial line with solid inner conductor H01P 1/067)}

Definition statement

This place covers:

Illustrative example of subject matter classified in H01P 1/068:

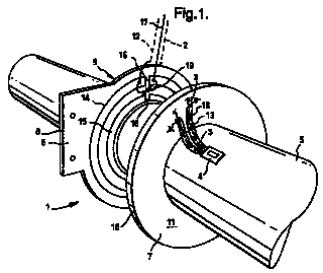

H01P 1/069

{the energy being transmitted in at least one ring-shaped transmission line located around an axial transmission line; Concentric coaxial systems}

Definition statement

This place covers:

Illustrative examples of subject matter classified in H01P 1/069 :

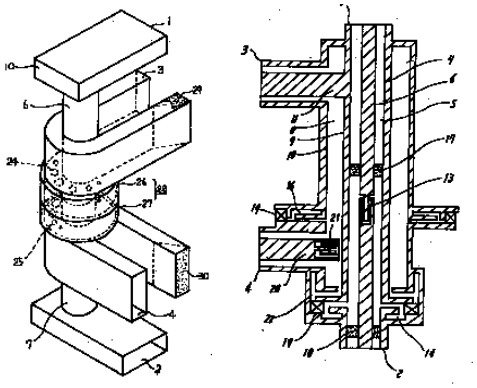

H01P 1/08

Dielectric windows (coupling devices for transit time tubes H01J 23/36)

Definition statement

This place covers:

Aperture in a waveguide to insulate microwave circuits from differential pressures, but they enable the propagation of microwaves without introducing reflection or internal resonance.

Windows of the kind which serve to isolate the environment without a section of electromagnetic transmission line from another environment of different pressures and/or other environmental

conditions, and which allow electromagnetic energy travelling along the transmission line to pass through the window with little or no loss of power.

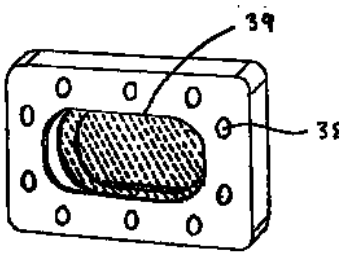

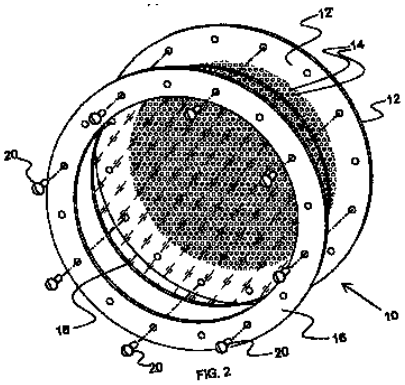

H01P 1/10

for switching or interrupting {(in systems using reflection or reradiation of radio, acoustic or other waves G01S 7/034)}

Relationships with other classification places

- H01H (related to switches);
- H01H 59/00 (MEM's).

Glossary of terms

In this place, the following terms or expressions are used with the meaning indicated:

MEM	Microelectromechanical (switches)
BAW	Bulk Acoustic Wave

H01P 1/11

by ferromagnetic devices

Definition statement

This place covers:

Anisotropic media: Media where the vectors E and D are nonparallel and/or nonparallel H and B vectors, which means that the media has different electrical properties in different directions, and thus the permittivity and/or permeability has a matrix form.

Ferrites are ferromagnetic ceramic materials, compounds of iron, boron and barium or strontium or molybdenum. Ferrites have a high magnetic permeability, which allows them to store stronger magnetic fields than iron, and are known as ceramic magnets.

Applying a DC magnetic bias field to a ferrite will produce that a microwave signal will propagate differently in different directions, this effect can be utilized to fabricate directional devices as isolators, circulators and gyrators. The interaction with an applied microwave signal can be controlled by adjusting the strength of the bias field, which leads to a variety of control devices such as phase shifters, switches and tunable resonators and filters.

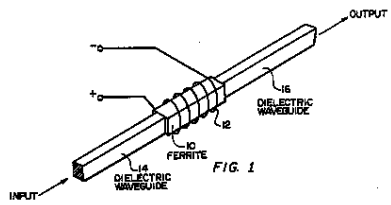

FIG. 1

H01P 1/12

by mechanical chopper

Definition statement

This place covers:

Mechanical switches (can be electrically or magnetically controlled); redundancy switches; distribution of signals; channel selection; also mechanical aspects of switchable attenuators, filters, etc.; choking aspects.

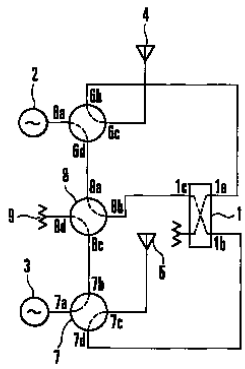

Relationships with other classification places

MEMS in H01H 1/0036, H01H 59/0009.

H01P 1/122

{Waveguide switches}

Definition statement

This place covers:

Illustrative examples of subject matter classified in H01P 1/122:

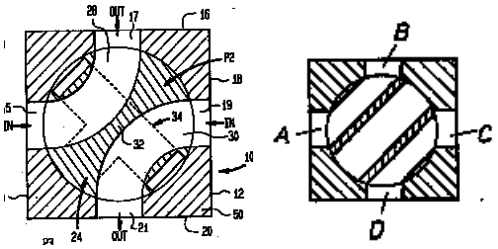

H01P 1/125

{Coaxial switches}

Definition statement

This place covers:

Illustrative examples of subject matter classified in H01P 1/125:

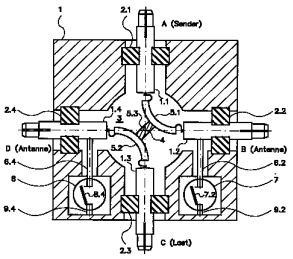

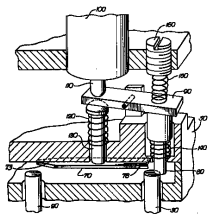

H01P 1/127

{Strip line switches}

Definition statement

This place covers:

Illustrative example of subject matter classified in H01P 1/127:

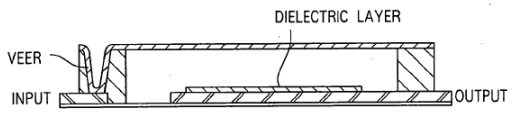

FIG. 1

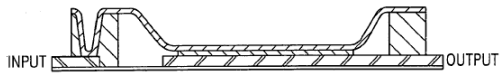

FIG. 2

Relationships with other classification places

MEMS in H03H 9/2405 and H03H 3/0072.

H01P 1/14

by electric discharge devices (discharge devices H01J 17/64)

Definition statement

This place covers:

Triggering plasma; multipactor switch; generating electron beams; use as receiver protector.

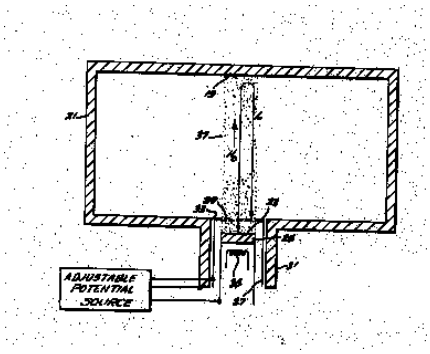

H01P 1/15

by semiconductor devices

Definition statement

This place covers:

(varactor) diodes; optically controlled semiconductors; use as transmit/receive switch.

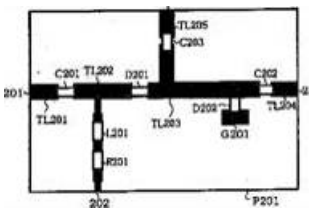

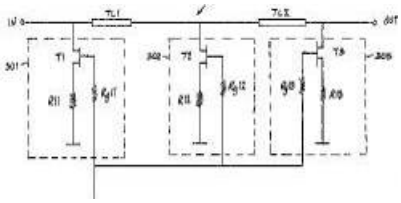

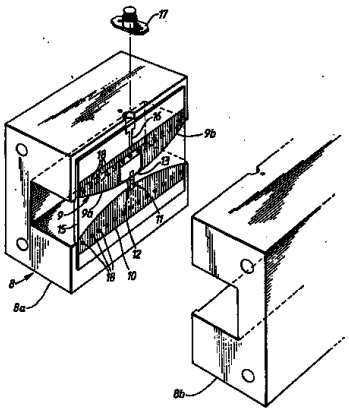

References

Limiting references

This place does not cover:

Optically controlled	G02B 6/00
Electronic switching or gating...in bipolar transistor switches;	H03K 17/04126
Electronic switching or gating....switching arrangements with several input- or output-terminals.	H03K 17/04126
Switches using semiconductor devices	H03K 17/56
Using Fets, Field effect transistors	H03K 17/687
Using Diodes	H03K 17/74

H01P 1/16

for mode selection, e.g. mode suppression or mode promotion; for mode conversion (linking dissimilar lines or devices H01P 5/08)

Definition statement

This place covers:

Illustrative example of subject matter classified in H01P 1/16:

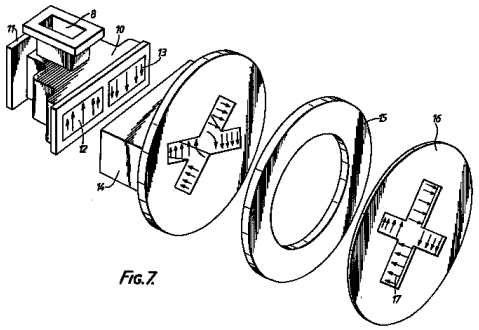

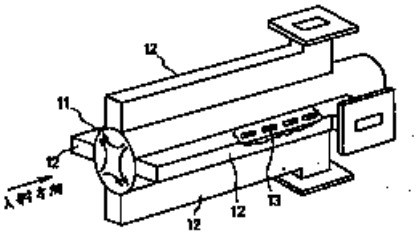

H01P 1/161

sustaining two independent orthogonal modes, e.g. orthomode transducer {(combining or separating polarisations and frequencies H01P 1/2131)}

Definition statement

This place covers:

Orthomode transducer: a three port waveguide device which supports signals having two orthogonal modes.

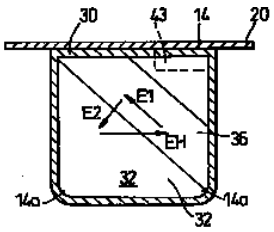

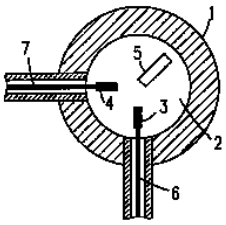

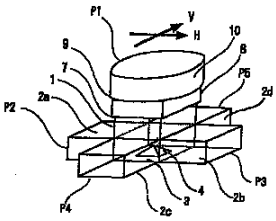

References

Limiting references

This place does not cover:

Orthomode horns	H01Q 13/0258

H01P 1/162

absorbing spurious or unwanted modes of propagation

Definition statement

This place covers:

Illustrative examples of subject matter classified in H01P 1/162:

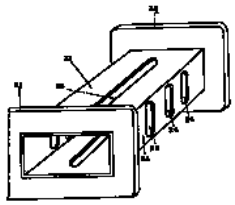

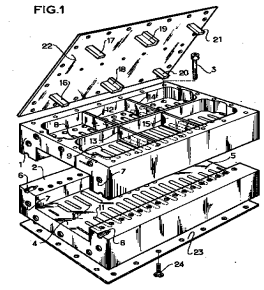

H01P 1/165

for rotating the plane of polarisation

Definition statement

This place covers:

Illustrative example of subject matter classified in H01P 1/16:

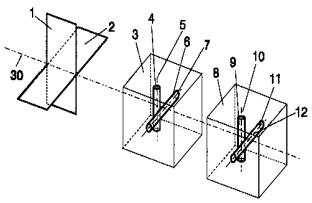

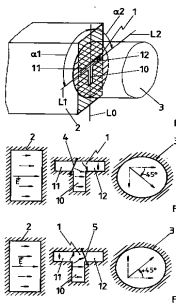

References

Limiting references

This place does not cover:

Rotation in free space	H01Q 15/246, H01Q 21/245

H01P 1/17

for producing a continuously rotating polarisation, e.g. circular polarisation

Definition statement

This place covers:

linear <--> circular polarisation; (gradual) change of waveguide inner surface; meandering conductors in a waveguide.

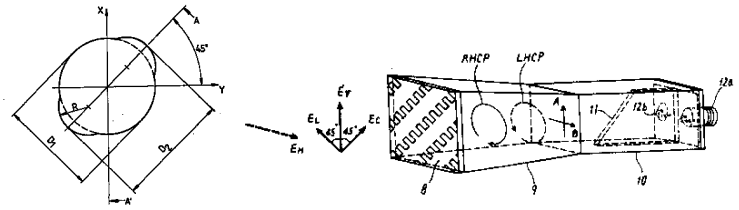

Relationships with other classification places

See also H01Q 15/244.

H01P 1/171

{using a corrugated or ridged waveguide section}

Definition statement

This place covers:

Illustrative examples of subject matter classified in H01P 1/171:

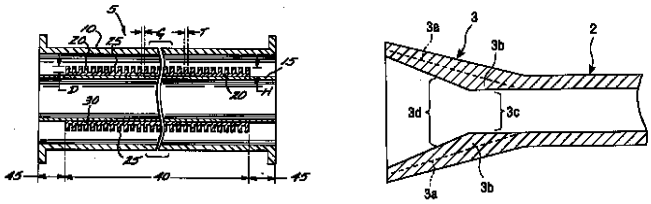

H01P 1/172

{using a dielectric element}

Definition statement

This place covers:

Illustrative examples of subject matter classified in H01P 1/172:

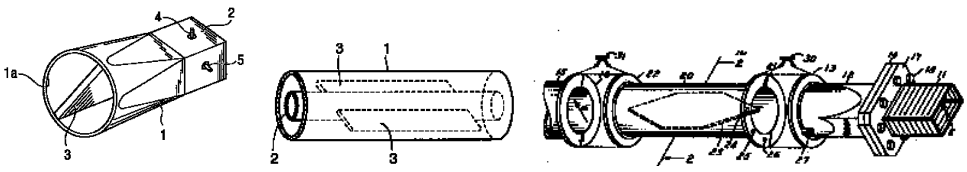

H01P 1/173

{using a conductive element}

Definition statement

This place covers:

Illustrative example of subject matter classified in H01P 1/173:

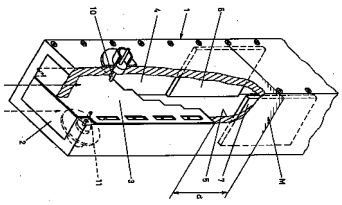

H01P 1/174

{using a magnetic element (H01P 1/175 takes precedence)}

Definition statement

This place covers:

Illustrative examples of subject matter classified in H01P 1/174:

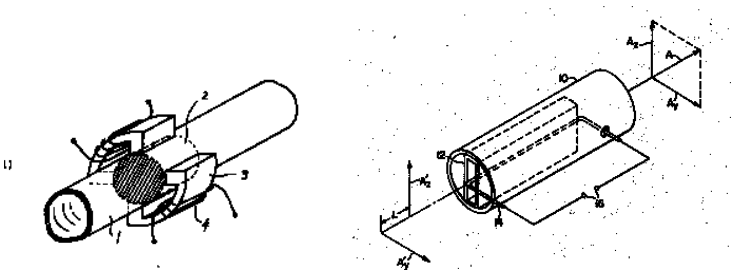

H01P 1/175

using Faraday rotators

Definition statement

This place covers:

Faraday rotation is the rotation of the plane of polarization of microwave energy exhibited when the energy is transmitted through ferrite material in the direction of a magnetic field.

A ferrite rod is included within the waveguide and is usually surrounded by an electrical coil to provide a magnetic field. By adjusting the plane of polarisation of the microwave radiation, its propagation along the waveguide may be controlled.

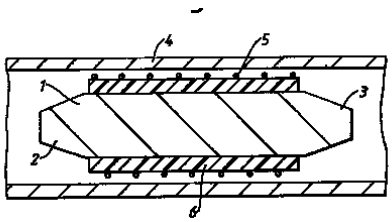

H01P 1/18

Phase-shifters (H01P 1/165 takes precedence; coupling devices with variable coupling factor H01P 5/04)

Definition statement

This place covers:

Illustrative example of subject matter classified in H01P 1/18:

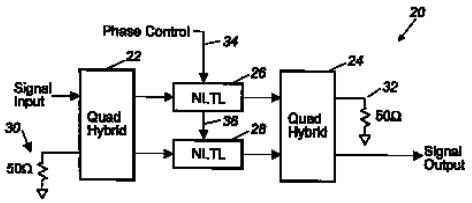

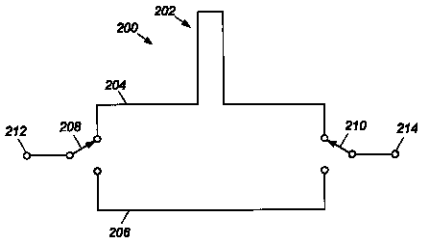

Relationships with other classification places

see also H01Q 3/36, H01Q 3/38.

Phase-inverters used in push-pull amplifiers: H03F 3/26, H03F 3/30.

H01P 1/181

{using ferroelectric devices}

Definition statement

This place covers:

Illustrative example of subject matter classified in H01P 1/181.

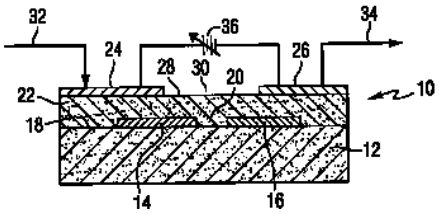

H01P 1/182

{Waveguide phase-shifters (H01P 1/181, H01P 1/185, H01P 1/19 take precedence)}

Definition statement

This place covers:

Illustrative examples of subject matter classified in H01P 1/182.

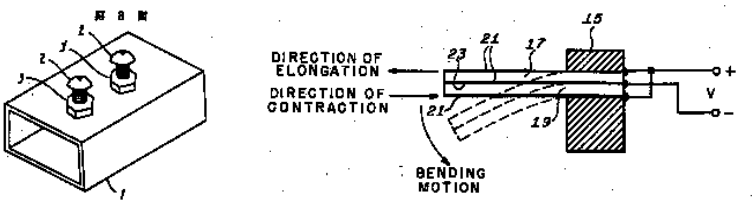

H01P 1/183

{Coaxial phase-shifters (H01P 1/181, H01P 1/185, H01P 1/19 take precedence)}

Definition statement

This place covers:

Illustrative examples of subject matter classified in H01P 1/18.

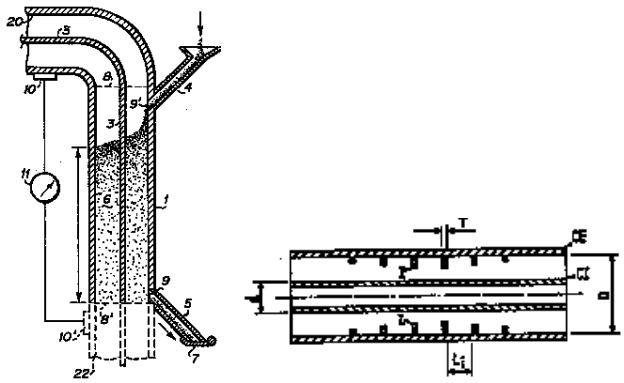

H01P 1/184

{Strip line phase-shifters (H01P 1/181, H01P 1/185, H01P 1/19 take precedence)}

Definition statement

This place covers:

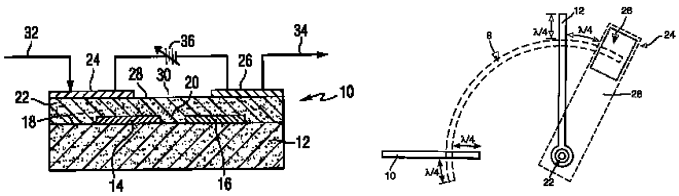

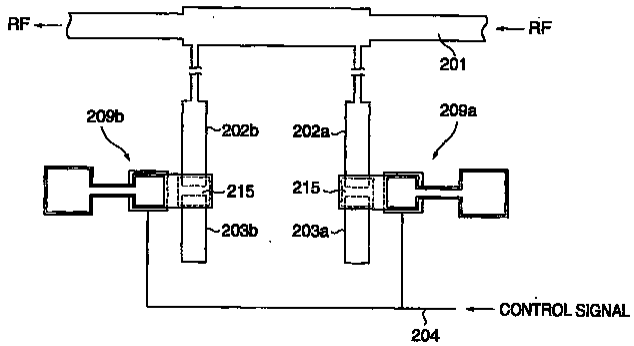

Microstrip, slotlines, coplanar lines phase shifters are included in this group.

H01P 1/185

using a diode or a gas filled discharge tube

Definition statement

This place covers:

Illustrative examples of subject matter classified in H01P 1/185:

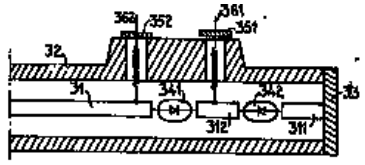

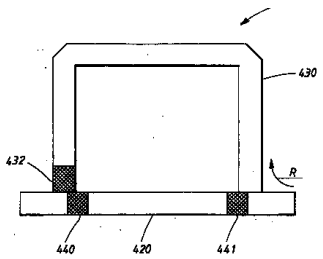

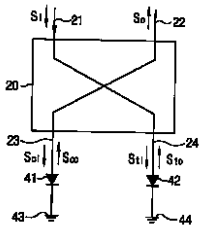

References

Informative references

Attention is drawn to the following places, which may be of interest for search:

Modulating electromagnetic waves using semiconductor devices	H03C 7/027

H01P 1/19

using a ferromagnetic device

Definition statement

This place covers:

Non-reciprocal devices; ferrites.

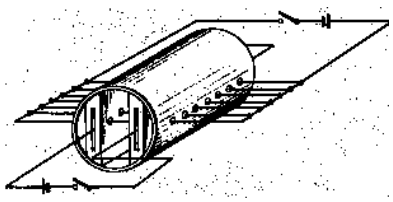

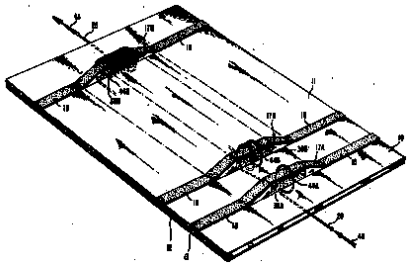

References

Informative references

Attention is drawn to the following places, which may be of interest for search:

Continuous tuning without displacement of reactive element	H03J 3/16
By discharge tube or semiconductor devices simulating variable reactance	H03J 3/18

H01P 1/195

having a toroidal shape

Definition statement

This place covers:

Illustrative examples of subject matter classified in H01P 1/195:

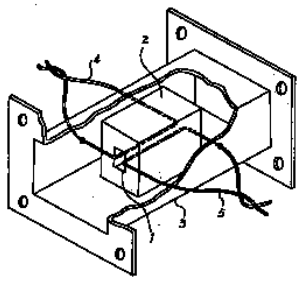

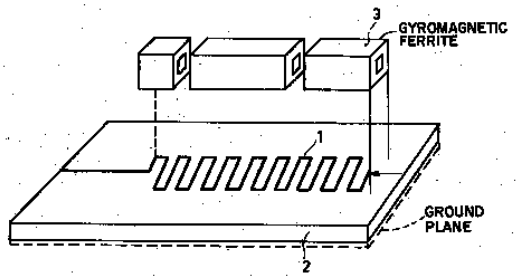

H01P 1/20

Frequency-selective devices, e.g. filters ({variable impedance transformers, e.g. slug tuners or stub tuners H01P 5/04}; resonators H01P 7/00)

Definition statement

This place covers:

This classification is very general, only related to filters that can not be clearly included in any of the following classifications or to theoretic articles/application where no specific filter arrangement (microstrip, stripline, waveguide, coaxial, coplanar, etc...) has been specified.

Bandpass or band-pass filters.

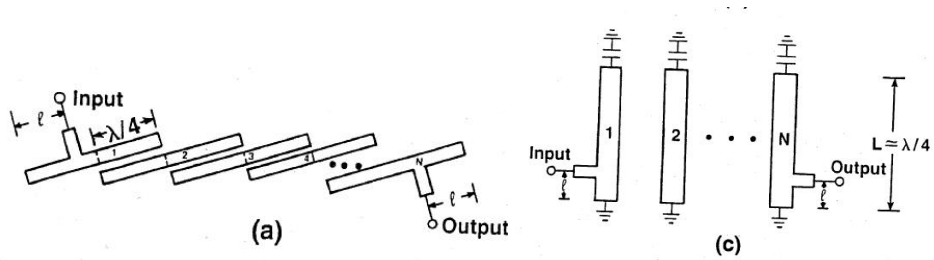

Low-pass or lowpass filters.

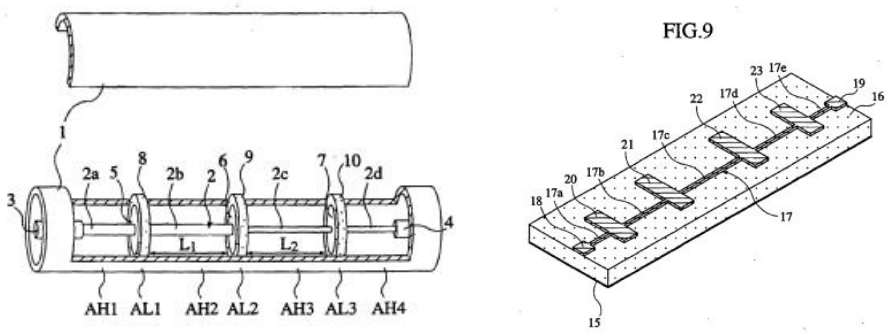

High-pass or highpass filters

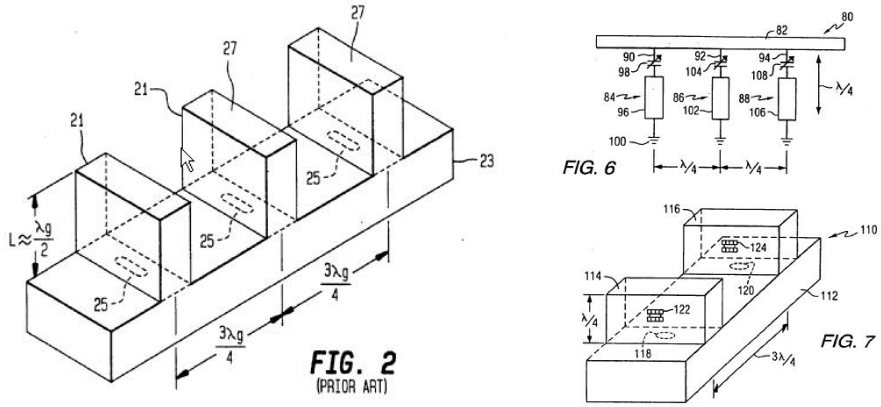

References

Limiting references

This place does not cover:

If the application is more focussed in the material of the substrate and it is, in particular, a METAMATERIAL.	G02B 1/002
Laser and terahertz frequencies	H01S 1/00
Low frequency filters (filters with lumped elements should be included here)	H03H 17/00
If the filtering is due to the substrate and it wants to eliminate any problem due to the PCB (or substrate)	H05K 1/0236

Synonyms and Keywords

In patent documents, the following words/expressions are often used as synonyms:

- "Bandpass" and "band-pass"
- "Low-pass" and "lowpass"
- "Band-stop or bandstop", "band reject","notch filter" and "band elimination"
- "High-pass" and "highpass filter"

H01P 1/2002

{Dielectric waveguide filters (H01P 1/212, H01P 1/213, H01P 1/215, H01P 1/219 take precedence)}

Definition statement

This place covers:

Filters implemented in a dielectric waveguide, e.g. NRD nonradiative dielectric waveguide.

The NRD guide circuit (Non-radiative dielectric waveguide) has a structure with a dielectric line through which an electromagnetic wave is transmitted and it is sandwiched between two parallel conductive plates made from conductive metal. A space of the two parallel plates is less than half a free space wavelength of a using frequency. Accordingly, the electromagnetic wave is blocked in plates other than the dielectric line and its radiation is restricted, so that the NPD guide circuit can transmit the electromagnetic wave along the dielectic line at a small loss.

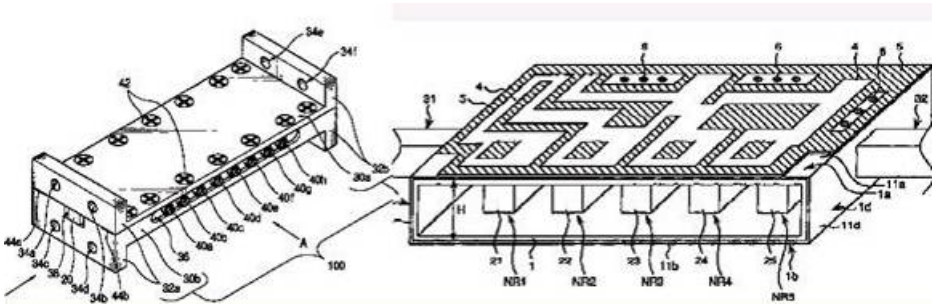

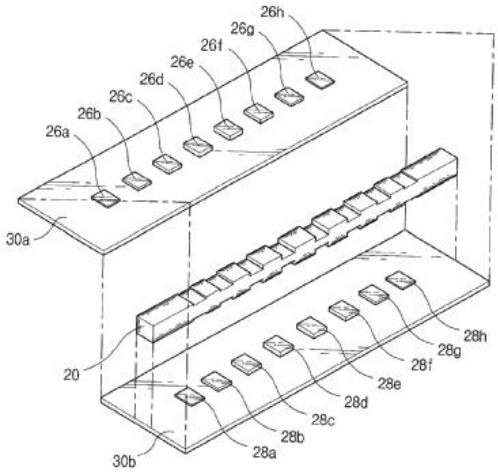

FIG. 2
(PRIOR ART)

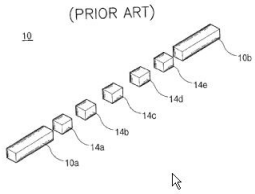

FIG. 3
(PRIOR ART)

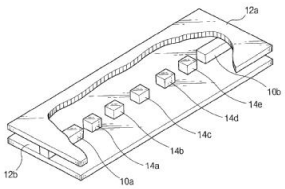

Synonyms and Keywords

In patent documents, the following abbreviations are often used:

NRD	Non-Radiative Dielectric

H01P 1/2005

{Electromagnetic photonic bandgaps [EPB], or photonic bandgaps [PBG]}

Definition statement

This place covers:

A structure that possesses a dispersion relation having a bandgap in which propagation of electromagnetic waves is prohibited in a specified frequency band is called an electromagnetic bandgap structure.

A photonic bandgap structure is a periodic arrangement of "defects" (e.g., pits or holes formed in layer of a device) that prevents the propagation of all electromagnetic waves within a particular frequency band. The defects introduce electrical frequency stop-bands much like a Bragg grating or crystal lattice structure introduces stop-bands in an optical transmission system. The spacing of the photonic bandgap structure's periodic defects determines the stop-band frequencies.

An electromagnetic bandgap* structure (EBG) is recently receiving attention as a scheme to solve some noise problems in microwave applications. This is for the purpose of blocking a signal ranging a certain frequency band by arranging the EBG having a certain structure in a printed circuit board, and the typical EBG has roughly two, namely a Mushroom type EBG(MT-EBG) and a Planar type EBG(PT-EBG).

* To have a better explanation of the electromagnetic bandgaps, see XP11037787, XP1034579

Relationships with other classification places

H01Q 15/00:

This EBG structure functions as a magnetic wall that reflects incident electromagnetic waves in phase in the vicinity of the band gap frequency band. For this reason, by installing the EBG structure on the back surface of an antenna, it is possible to achieve a lower profile of the antenna while maintaining its radiation efficiency.

(Internal Note: reference is made to KW: 1500C5E included in H01Q)

H05K 1/0236: Frequency selective surfaces to shield the noise coming from inside the PCB.

When meta materials are included in the PCB see H05K 1/024.

The metamaterial is an artificial substance having an electromagnetic or optical characteristic which is not provided in substances existing in the natural world. Representative characteristics of such a metamaterial include negative magnetic permeability ([mu]<0), negative dielectric constant ([element of]<0), or negative refractive index (in a case where both of the magnetic permeability and the dielectric constant are negative).

Glossary of terms

In this place, the following terms or expressions are used with the meaning indicated:

EBG	Electromagnetic Bandgap
PBG	Photonic Bandgaps

H01P 1/2007

{Filtering devices for biasing networks or DC returns}

Definition statement

This place covers:

The filtering devices including lumped elements, or striplines or coaxial implementations.

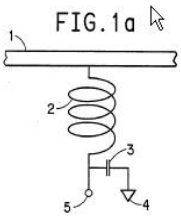

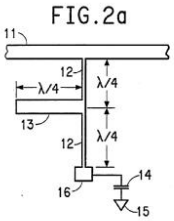

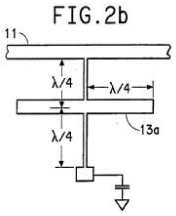

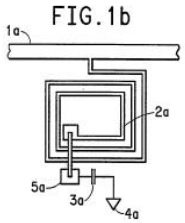

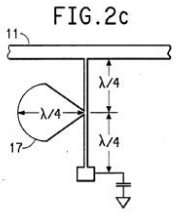

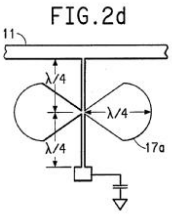

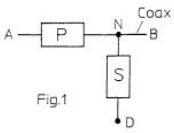

Fig.1

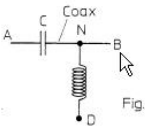

Fig.2

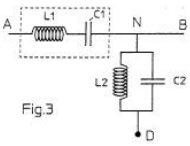

Fig.3

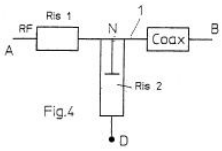

Fig.4

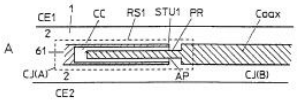

Fig.5

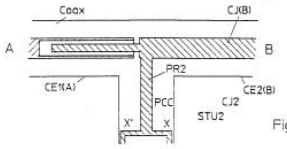

Fig.6

H01P 1/201

Filters for transverse electromagnetic waves (H01P 1/212, H01P 1/213, H01P 1/215, H01P 1/219 take precedence)

Definition statement

This place covers:

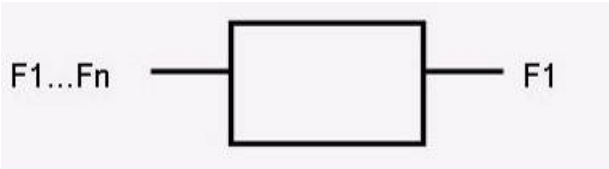

One input and one output frequency (filtered).

The basic transverse electromagnetic wave involves both a varying electric field and a varying magnetic field, appearing at right angles to each other and to the direction of travel of the wave.

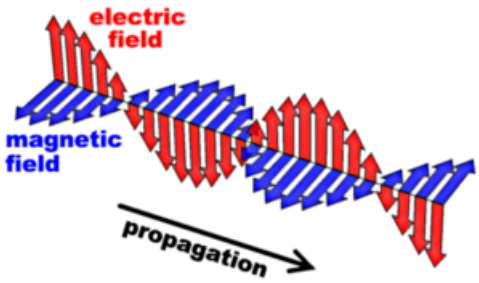

H01P 1/2013

{Coplanar line filters}

Definition statement

This place covers:

Illustrative examples of subject matter classified in H01P 1/2013:

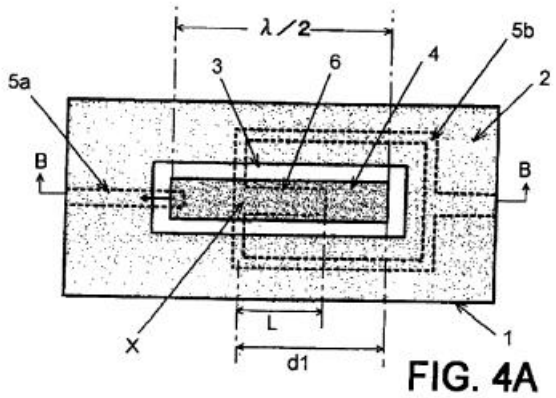

FIG. 4A

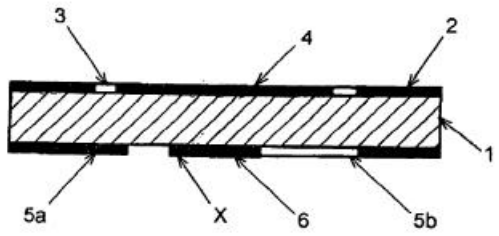

FIG. 4B

H01P 1/2016

{Slot line filters; Fin line filters}

Definition statement

This place covers:

Fin-line and metal insert filters, see XP 1401427.

In a fin-line structure metal inserts (fins) are printed on a dielectric substrate mounted in the E-plane of a rectangular waveguide.

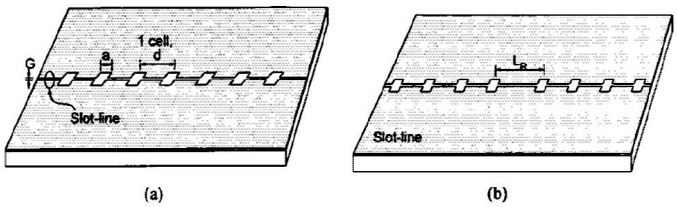

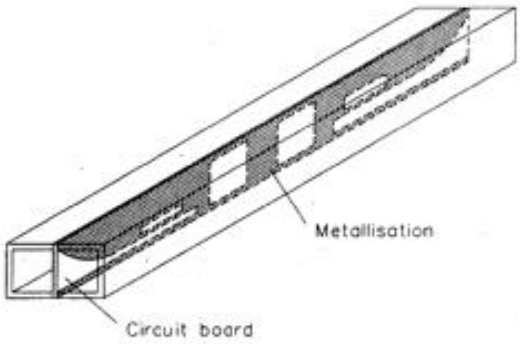

Figure 1. The new E-plane filter.

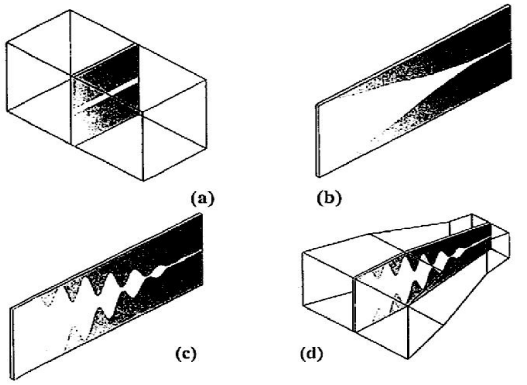

Fig. 1. Illustration of the four optimization stages used for the call design in finline technology.

References

Limiting references

This place does not cover:

In the case of an E-plane waveguide filter, if the element dividing the waveguide is a "metal plate"	H01P 1/207
Sometimes, E-plane filters with a metal plate dividing the two halves of the waveguide is considered also as "finline filter". In this case (if there is a "metal plate"), classify it in	H01P 1/207

H01P 1/202

Coaxial filters (cascaded coaxial cavities H01P 1/205)

Definition statement

This place covers:

Illustrative example of subject matter classified in H01P 1/202.

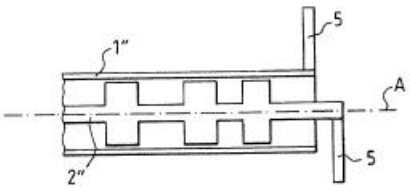

FIG.3

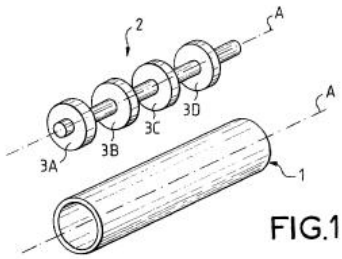

FIG.1

H01P 1/203

Strip line filters

Definition statement

This place covers:

Illustrative examples of subject matter classified in H01P 1/203.

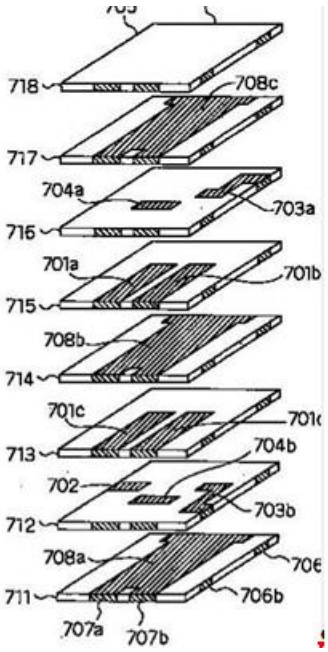

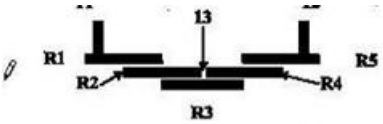

Fig. 1

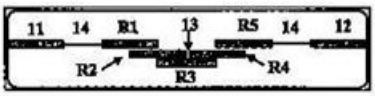

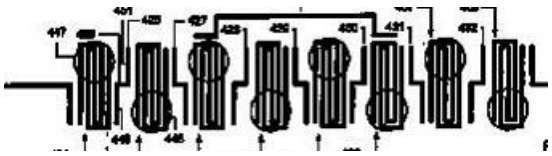

References

Limiting references

This place does not cover:

SAW (Surface Acoustic Wave) filters	H03H 9/64

H01P 1/20309

{with dielectric resonator}

Definition statement

This place covers:

Illustrative example of subject matter classified in H01P 1/20309.

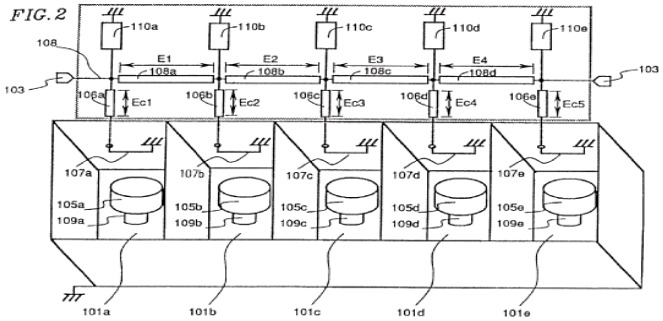

H01P 1/20318

{with dielectric resonators as non-metallised opposite openings in the metallised surfaces of a substrate}

Definition statement

This place covers:

Illustrative example of subject matter classified in H01P 1/20318:

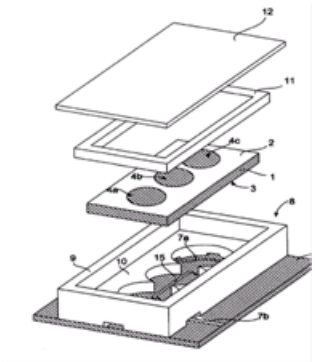

H01P 1/20336

{Comb or interdigital filters}

Definition statement

This place covers:

The definition of this class relates to the configuration of the filters and the arrangement of the connection to ground (see figures).

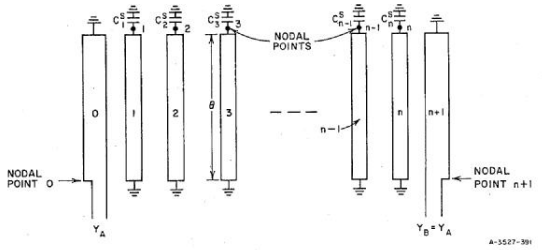

SOURCE: Quarterly Progress Report 5, Contract DA 36-039 SC-87398, SRI; reprinted in *The Microwave Journal* (see Ref. 18 by G. L. Matthaei)

FIG. 8.13-1(a) A COMB-LINE, BAND-PASS FILTER
The nodal points are defined for use in the design equation derivations discussed in Sec. 8.14

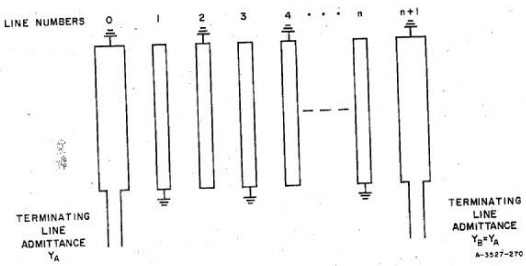

SOURCE: Quarterly Progress Report 4, Contract DA 36-039 SC-87398, SRI; reprinted in *IRE Trans. PGMTT* (see Ref. 3 by G. L. Matthaei)

FIG. 10.06-1 INTERDIGITAL FILTER WITH SHORT-CIRCUITED LINES AT THE ENDS

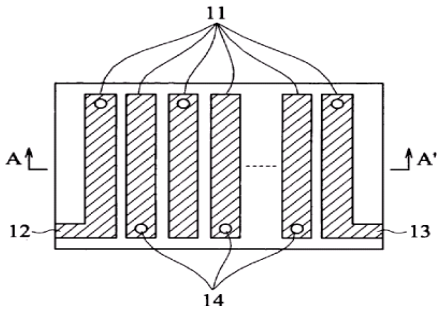

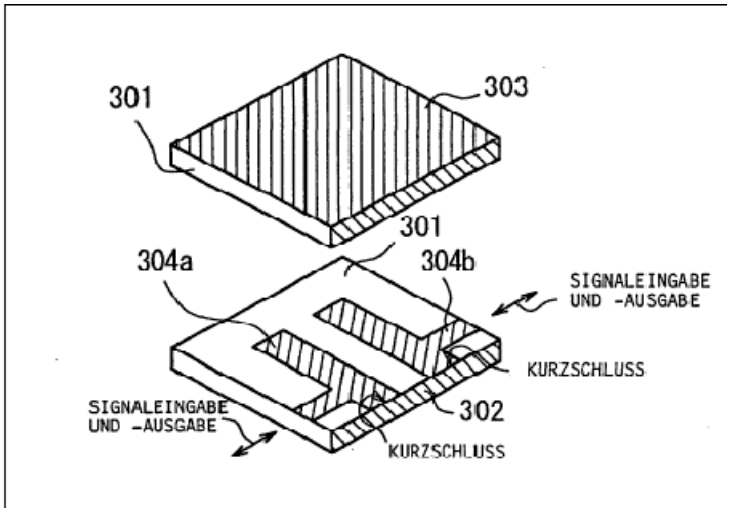

H01P 1/20345

{Multilayer filters}

Definition statement

This place covers:

The filters are arranged in a plurality of stacked layers, where "usually" the ground planes are the external (bottom/top layers) ones.

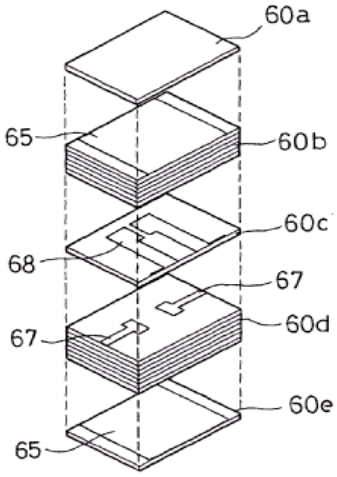

H01P 1/20363

{Linear resonators}

Definition statement

This place covers:

The input and the output of the filter are arranged in a linear configuration.

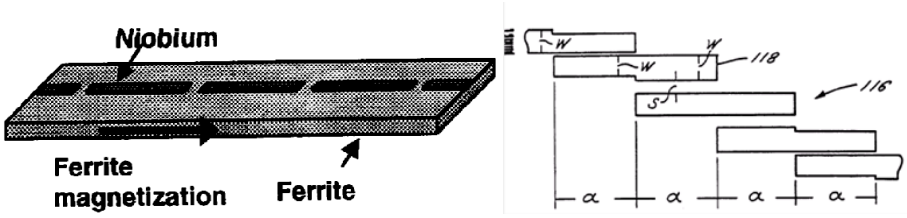

H01P 1/20372

{Hairpin resonators}

Definition statement

This place covers:

Illustrative example of subject matter classified in H01P 1/20372:

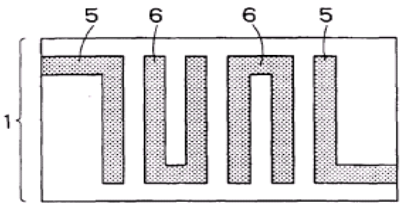

H01P 1/20381

{Special shape resonators}

Definition statement

This place covers:

All kind of stripline filters (trapezoidal, helicoidal, spiral, etc...) not included in any of the previous classifications.

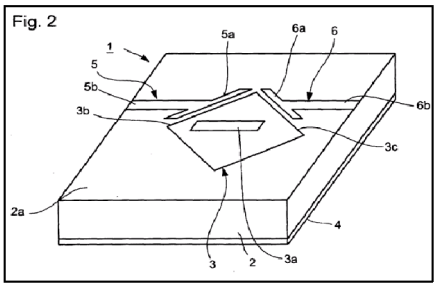

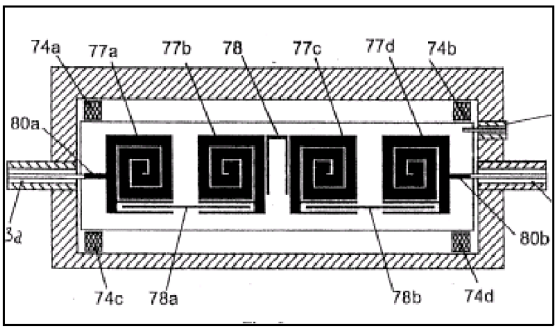

H01P 1/2039

{Galvanic coupling between Input/Output}

Definition statement

This place covers:

Low pass filter.

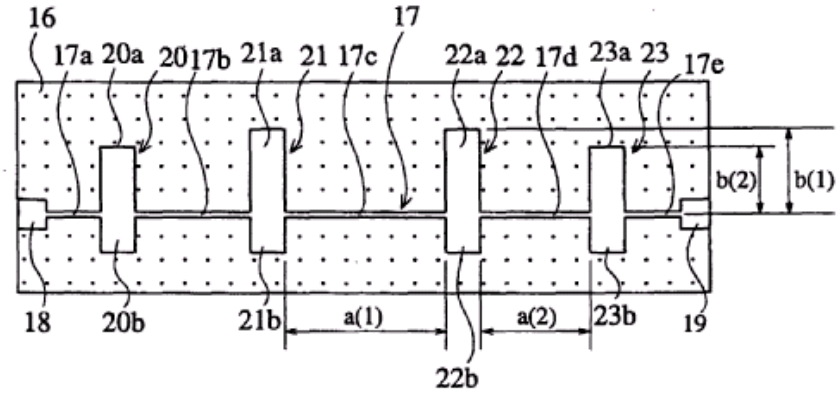

notch, bandstop filter

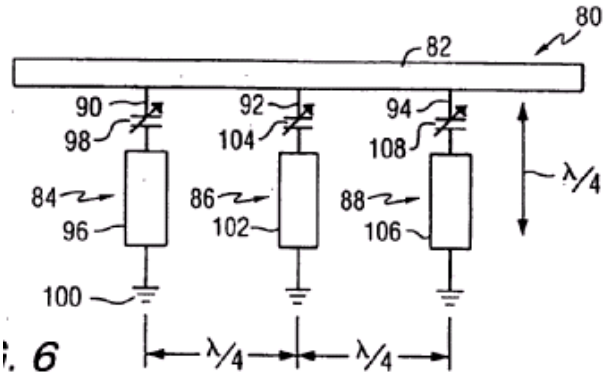

Bandpass filters using ring resonators with different notch frequencies connected in parallel (see US2007/0063794).

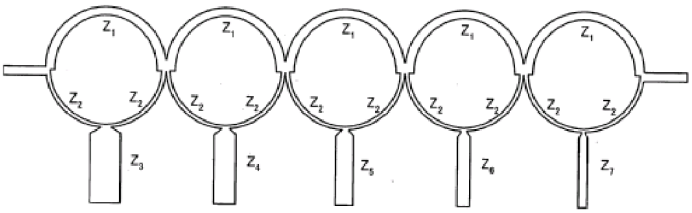

Bandstrop filters with spurlines (spur lines).

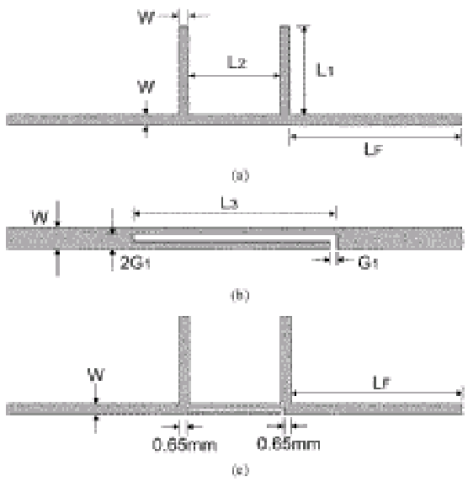

Fig. 1. Configurations of BSFs using (a) open stubs, (b) spurline, and (c) combination of open stubs and spurline.

H01P 1/2053

{the coaxial cavity resonators being disposed parall to each other}

Definition statement

This place covers:

In this configurations, each resonator has its own external conductive wall.

Cascaded dielectric coaxial resonators

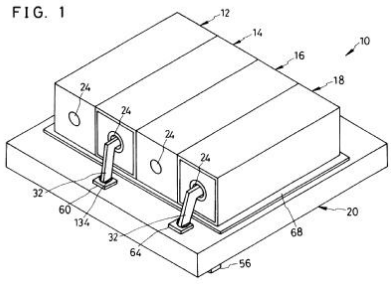

Cascaded cavities with coaxial resonators

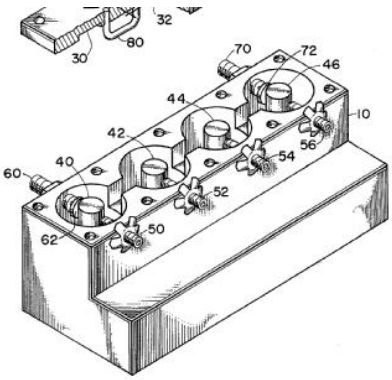

H01P 1/2056

{Comb filters or interdigital filters with metallised resonator holes in a dielectric block}

Definition statement

This place covers:

Illustrative example of subject matter classified in H01P 1/2056:

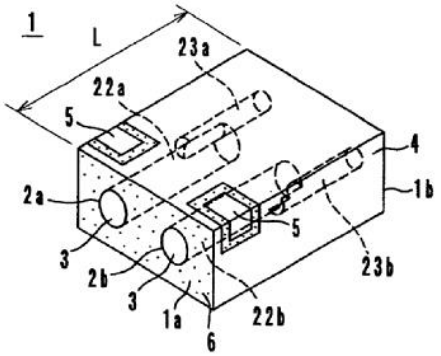

H01P 1/207

Hollow waveguide filters (H01P 1/212, H01P 1/213, H01P 1/215, H01P 1/219 take precedence)

Definition statement

This place covers:

Illustrative examples of subject matter classified in H01P 1/207:

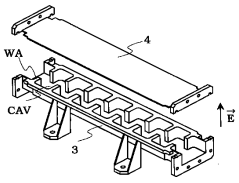

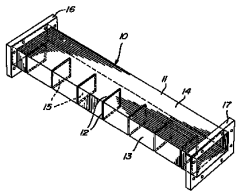

H01P 1/2082

{with multimode resonators (H01P 1/2086 takes precedence)}

Definition statement

This place covers:

Illustrative example of subject matter classified in H01P 1/2082:

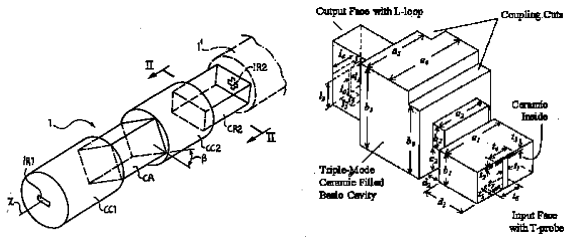

H01P 1/2084

{with dielectric resonators}

Definition statement

This place covers:

Illustrative example of subject matter classified in H01P 1/2084:

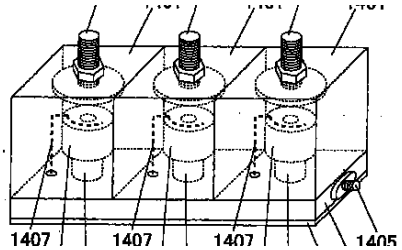

H01P 1/2086

{multimode}

Definition statement

This place covers:

Illustrative example of subject matter classified in H01P 1/20372 :

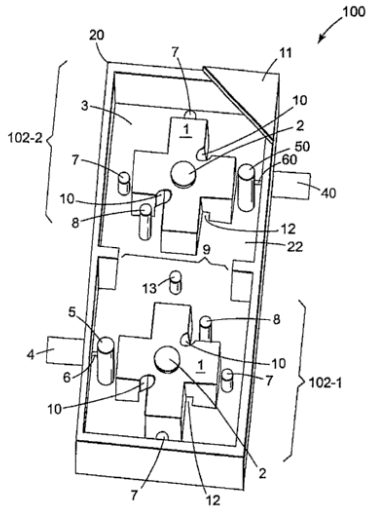

H01P 1/2088

{Integrated in a substrate}

Definition statement

This place covers:

Illustrative example of subject matter classified in H01P 1/2088:

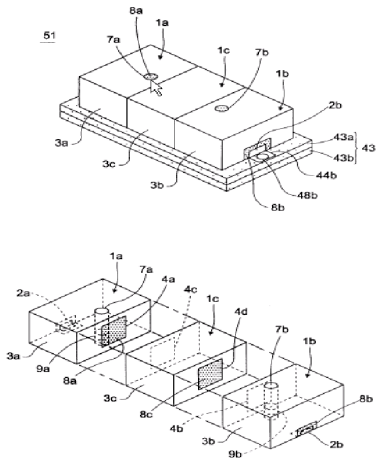

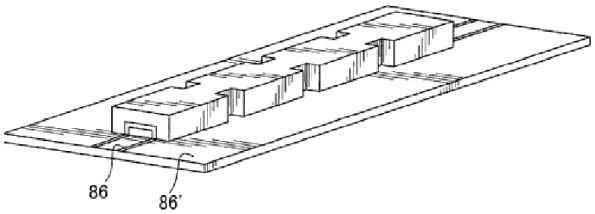

H01P 1/209

comprising one or more branching arms or cavities wholly outside the main waveguide

Definition statement

This place covers:

Illustrative example of subject matter classified in H01P 1/209:

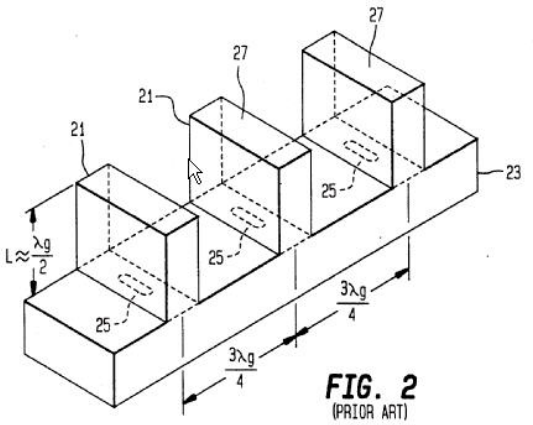

H01P 1/211

Waffle-iron filters; Corrugated structures

Definition statement

This place covers:

Illustrative example of subject matter classified in H01P 1/211:

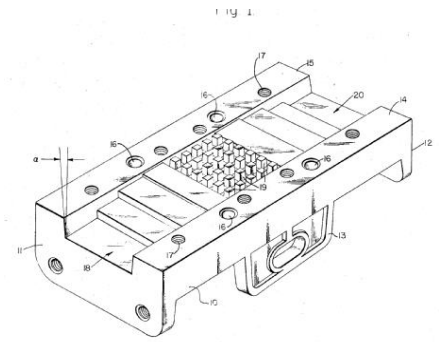

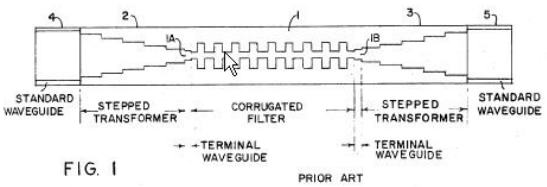

H01P 1/213

combining or separating two or more different frequencies (H01P 1/215 takes precedence)

Definition statement

This place covers:

One input frequency is divided in several output frequencies (2 or more)

A multiplexer is a network that separates signals from a common port to other ports, sorted according to their frequency. A diplexer is a pair of filters arranged in a three port network, such that a signal at port one will be delivered to port 2 if it is a certain frequency band, and delivered to port 3 if it is in another frequency band.

Duplexer is the term used in radar for the element which separates transmitter and receiver (Section 1.3 Skolnik). However, in the patent literature both terms (diplexer and duplexer) are sometimes confused.

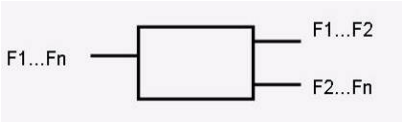

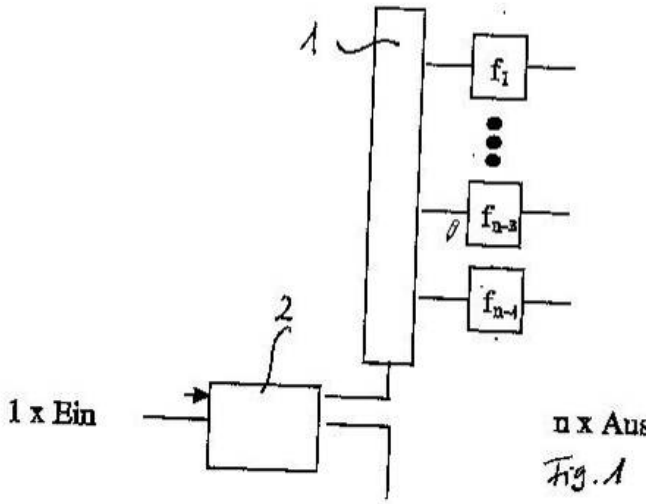

Relationships with other classification places

H04B 1/44

Transmit/receive switching (in radar systems G01S 7/034; tubes therefor H01J 17/64; waveguide switches H01P 1/10)

H04B 1/52

Hybrid arrangements, i.e. for transition from single-path two-way transmission to single transmission on each of two path, or vice-versa (multiport networks H03H 7/46; microwave multiplexers H01P 1/213)

H03H 7/46

Networks for connecting several sources or loads, working on different frequencies or frequency bands, to a common load or source (for use in multiplex transmission systems H04J 1/00)

H01P 1/2133

{using coaxial filters (H01P 1/2131, H01P 1/2136 take precedence)}

Definition statement

This place covers:

Illustrative example of subject matter classified in H01P 1/2133:

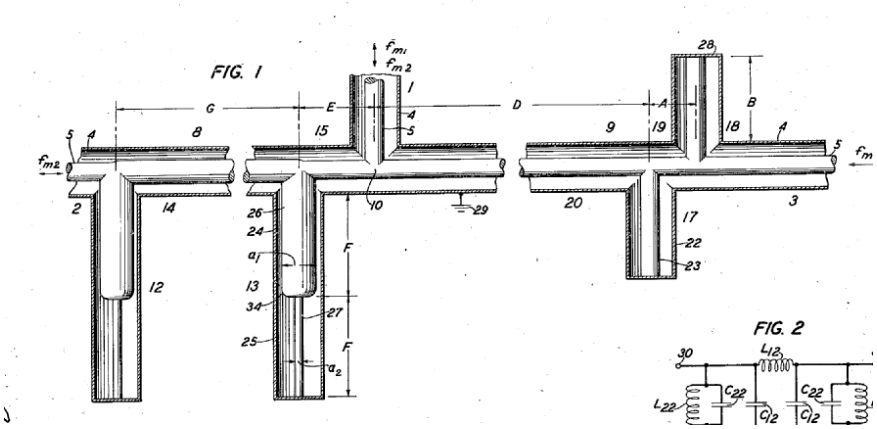

H01P 1/2135

{using strip line filters (H01P 1/2131 takes precedence)}

Definition statement

This place covers:

It is possible that in this group, some dielectric resonators are included because of the relationship between striplines and dielectric resonators (see H01P 1/20309).

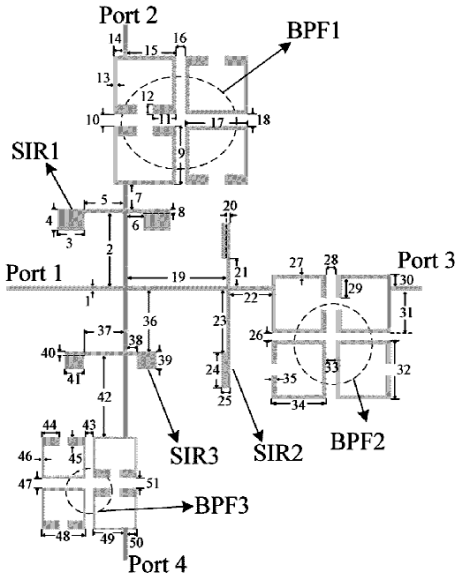

Fig. 5. Layout of the proposed microstrip triplexer.

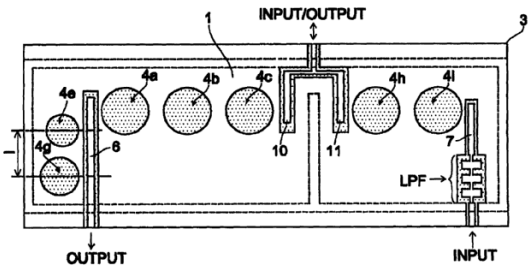

H01P 1/2136

{using comb or interdigital filters; using cascaded coaxial cavities (H01P 1/2131, H01P 1/2135 take precedence)}

Definition statement

This place covers:

Illustrative example of subject matter classified in H01P 1/2136:

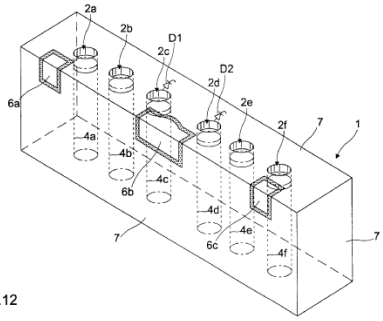

FIG.12

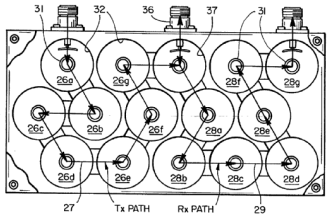

FIG_3

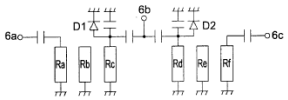

FIG.13

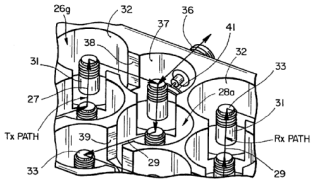

FIG_4

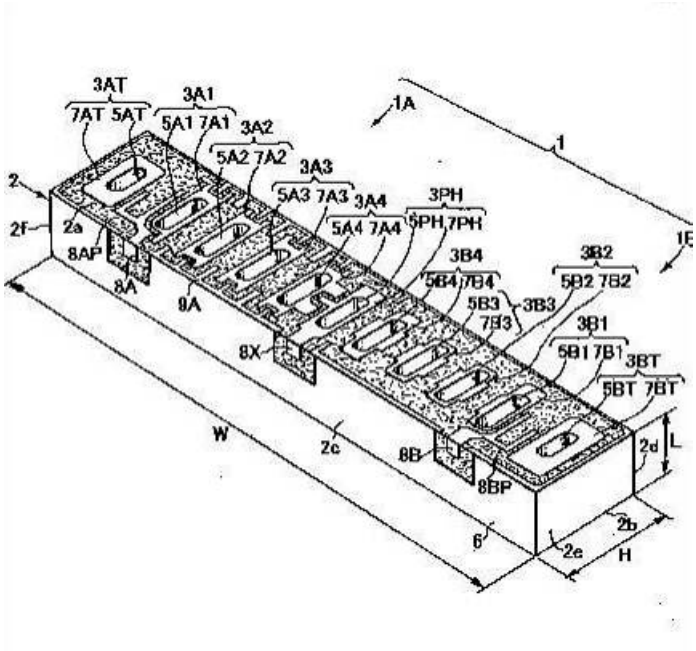

H01P 1/2138

{using hollow waveguide filters (H01P 1/2131 takes precedence)}

Definition statement

This place covers:

Dielectric resonators are also herein included.

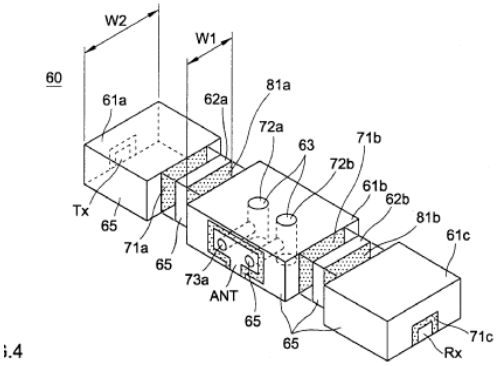

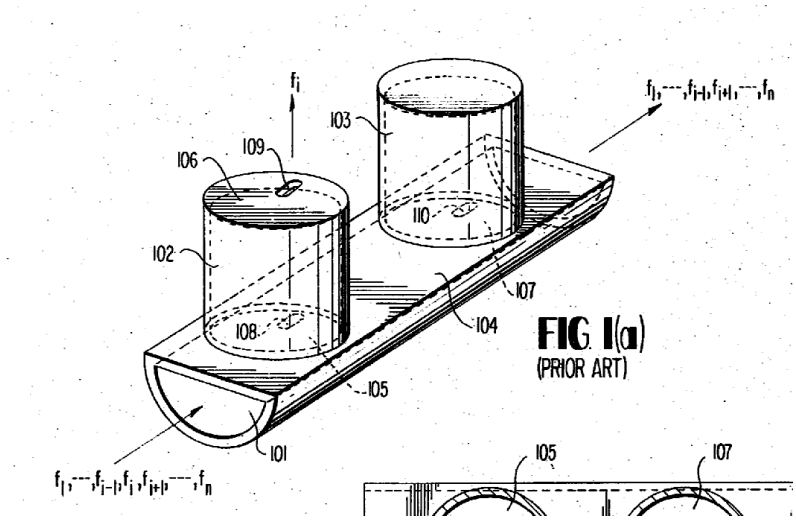

FIG. 1(a)
(PRIOR ART)

H01P 1/218

the ferromagnetic material acting as a frequency selective coupling element, e.g. YIG-filters

Definition statement

This place covers:

Single crystal yttrium iron garnet (YIG) or gallium-substituted YIG (GaYIG) are magnetic insulators which resonate at a microwave frequency when magnetized by a suitable direct magnetic field.

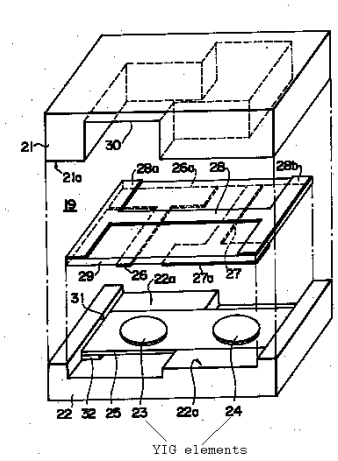

Glossary of terms

In this place, the following terms or expressions are used with the meaning indicated:

YIG	Yttrium Iron Garnett

H01P 1/219

Evanescent mode filters

Definition statement

This place covers:

An evanescent mode waveguide may have a conducting tube having an arbitrary cross-sectional shape and having at least one resonator. The dimensions of the cross-section are chosen to allow wave propagation at the operating frequency of interest while causing other frequencies to rapidly decay. A sectional length of an evanescent mode waveguide can be represented as a pi or tee section of inductors whose values are functions of section length, dielectric constant, and guide cross section. A resonant post may be inserted in such a way that it penetrates the broad wall of the evanescent mode waveguide, thereby forming a shunt capacitive element between opposite conducting walls of the guide. The resulting combination of shunt inductance and shunt capacitance forms a resonance.

Evanescent resonators are typically constructed from lengths of below-cutoff (e.g. dispersive) transmission line with the resonators formed by posts, capacitive screws, ridges.

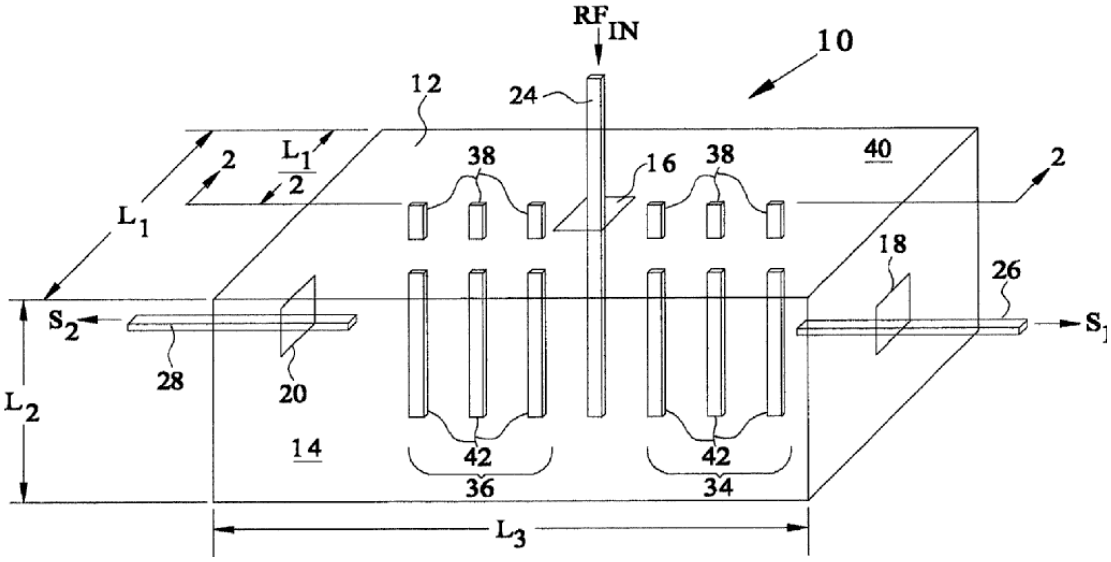

H01P 1/22

Attenuating devices (dissipative terminating devices H01P 1/26)

Definition statement

This place covers:

An attenuator is an electronic device that reduces the amplitude or power of a signal without appreciably distorting its waveform.

References

Limiting references

This place does not cover:

Attenuators with transistors	H03H 7/00

H01P 1/222

{Waveguide attenuators (H01P 1/23 takes precedence)}

Definition statement

This place covers:

Illustrative example of subject matter classified in H01P 1/222:

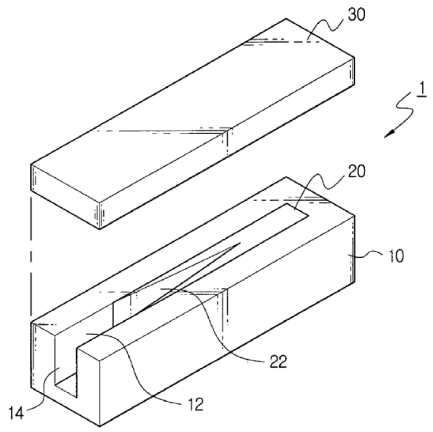

H01P 1/225

{Coaxial attenuators (H01P 1/23 takes precedence)}

Definition statement

This place covers:

Illustrative example of subject matter classified in H01P 1/225:

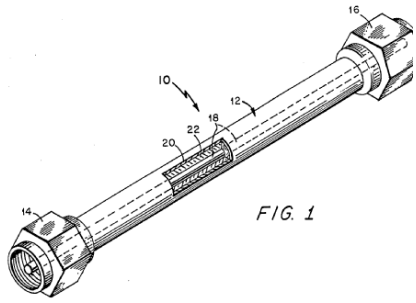

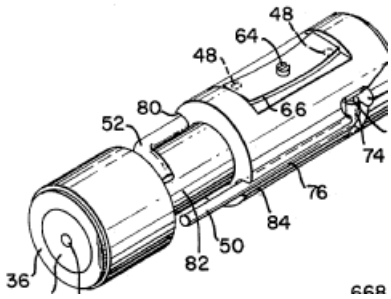

H01P 1/227

{Strip line attenuators (H01P 1/23 takes precedence)}

Definition statement

This place covers:

Illustrative example of subject matter classified in H01P 1/227:

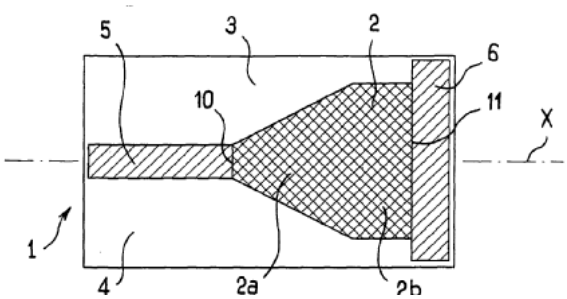

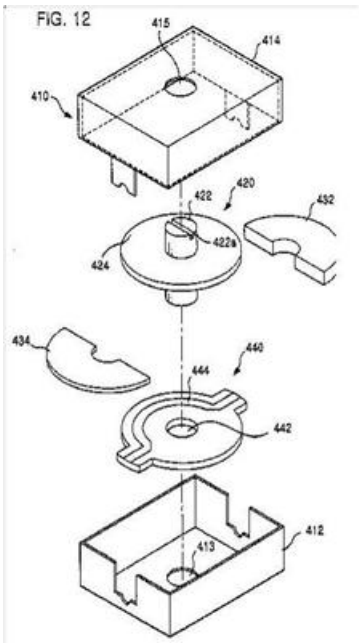

References

Informative references

Attention is drawn to the following places, which may be of interest for search:

Phase shifters	H01P 1/184
Delay lines	H01P 9/00

H01P 1/24

Terminating devices

Definition statement

This place covers:

Not only loads

H01P 1/264

{Waveguide terminations (H01P 1/262 takes precedence)}

Definition statement

This place covers:

Illustrative example of subject matter classified in H01P 1/264:

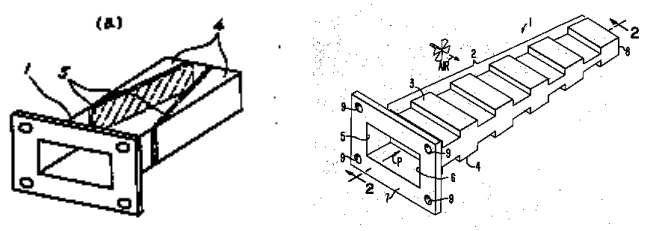

H01P 1/28

Short-circuiting plungers (coupling devices with variable coupling factor H01P 5/04)

Definition statement

This place covers:

Illustrative example of subject matter classified in H01P 1/28:

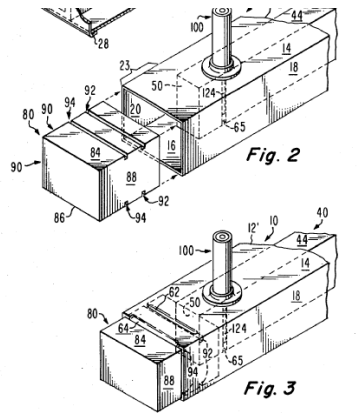

H01P 1/30

for compensation of, or protection against, temperature or moisture effects; {for improving power handling capability (H01P 1/04, H01P 1/08 take precedence)}

Definition statement

This place covers:

Devices related to environmental conditions.

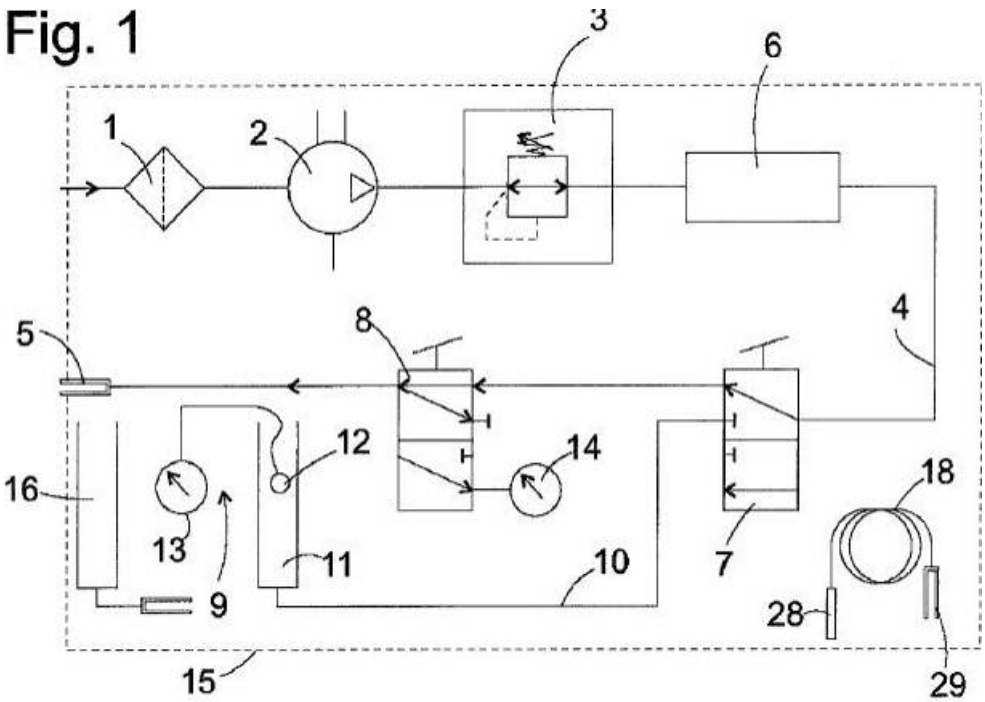

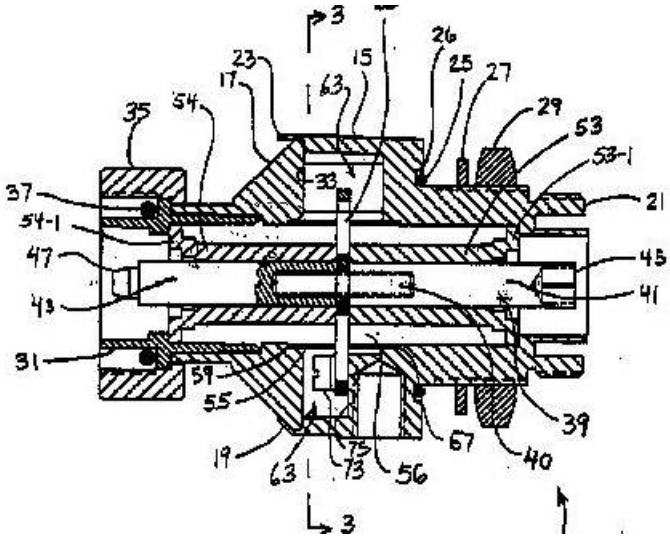

Relationships with other classification places

H01Q 1/50. Structural association of aerials with earthing switches, lead-in devices or lightning protectors (lead-in devices H01B; lightning protectors, switches H01H)

H01R 24/48 .... for overvoltage protection [N9803]

H01P 1/202... Coaxial filters (cascaded coaxial cavities H01P 1/205)

H01P 1/36

Isolators

Definition statement

This place covers:

An RF isolator is a two-port passive device made of magnets and ferrite material which is used to protect other RF components from excessive signal reflection.

Usually, one of the ports of the isolator is grounded.

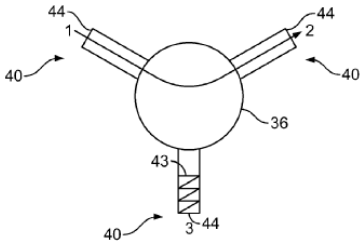

FIG. 2

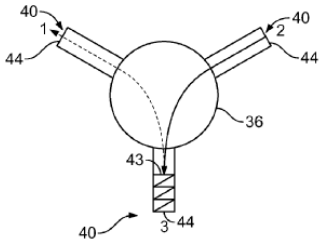

FIG. 3

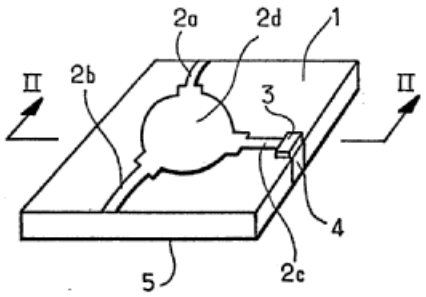

H01P 1/362

{Edge-guided mode devices}

Definition statement

This place covers:

An edge-guided mode device is provided with a dominant mode that resembles TEM energy propagation except that there is a strong transverse field displacement causing the wave energy to be concentrated along the edges of a metal stripline conductor formed on the surface of a ferrite substrate located on a metal ground plane and having a magnetic field applied thereto perpendicular to the ground plane. The edges are designed to be free of abrupt changes in order that there be

no abrupt impedance change of the circuit. Non-reciprocal behaviour is obtained by asymmetrically loading the edges.

See documents US3,617,951 and US3,555,459

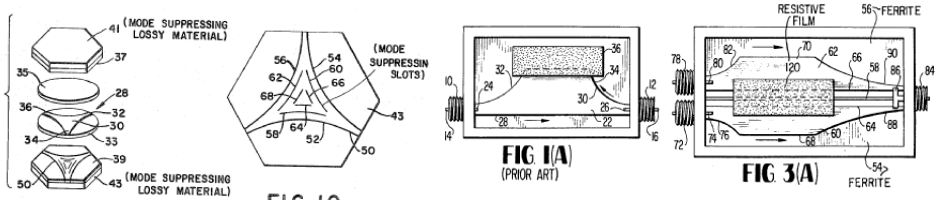

H01P 1/365

Resonance absorption isolators

Definition statement

This place covers:

In this class of isolator, an absorption element (dummy load, dielectric member, ferrite slab, etc...) could be coupled to the isolator in order to absorb the energy of a microwave propagating backwardly.

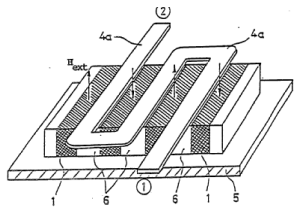

H01P 1/37

Field displacement isolators

Definition statement

This place covers:

The use of a lossy element in the isolator will produce a change in the field distribution over the conductor (microstrip or transmission line) of the isolator (see figure).

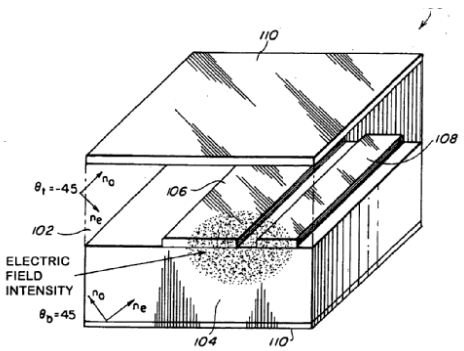

H01P 1/38

Circulators

Definition statement

This place covers:

Ferrite circulators are typically configured as multi-port (e.g., three-port) passive RF or microwave devices having within a housing magnets and ferrite material that may be used to control the direction of signal flow in, for example, an RF circuit or a microwave circuit. For example, ferrite circulators may be used to control signal flow in wireless base station or power amplifier applications. Ferrite isolators (see H01P 1/36) also may be constructed by terminating one port of a ferrite circulator. Terminating one port results in signal or energy flow in only one direction, which may be used, for example, for isolating components in a chain of interconnected components.

For more general information about circulators/isolators: http://www.tscm.com/circulat.pdf

H01P 1/383

Junction circulators, e.g. Y-circulators

Definition statement

This place covers:

Usually, a 3-port circulator is generally called a Y-junction circulator. In case of specification of the circulator, see H01P 1/387 (stripline circulators) or H01P 1/39 (waveguide circulators).

H01P 1/387

Strip line circulators

Definition statement

This place covers:

Illustrative example of subject matter classified in H01P 1/387.

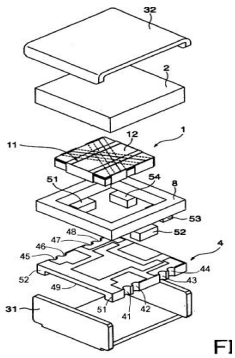

FI

References

Limiting references

This place does not cover:

Gyrators	H03H 7/002
One way transmission-networks (unilines)	H03H 7/52

H01P 1/39

Hollow waveguide circulators

Definition statement

This place covers:

Illustrative example of subject matter classified in H01P 1/39:

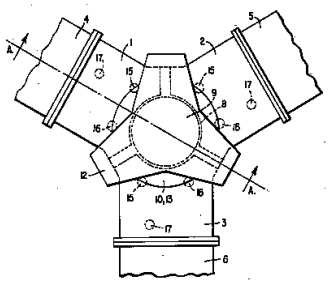

H01P 1/393

using Faraday rotators

Definition statement

This place covers:

The Faraday effect is produced when the plane of polarization of incident energy is rotated by passing the energy through an axially oriented, unidirectional, bias magnetic field. This principle is combined with well-known wave-guide principles in determining the propagation paths of electromagnetic energy in the coupler.

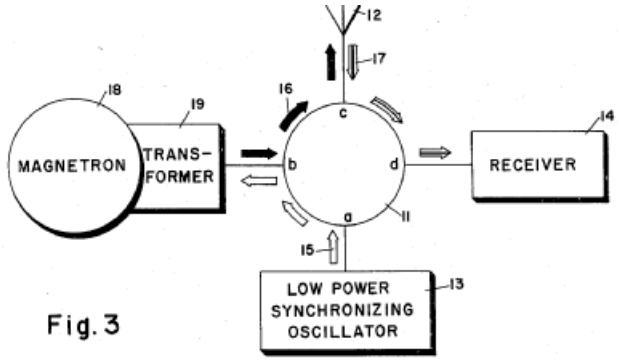

Fig. 3

H01P 3/00

Waveguides; Transmission lines of the waveguide type

Definition statement

This place covers:

"Waveguide" as applied to transmission lines includes only high-frequency coaxial cables or Lecher lines, and as applied to resonators, delay lines, or other devices includes all devices having distributed inductance and capacitance.

H01P 3/003

{Coplanar lines}

Definition statement

This place covers:

A coplanar waveguide consists of a strip of thin metallic film on the surface of a dielectric slab with two ground electrodes running adjacent and parallel to the strip.

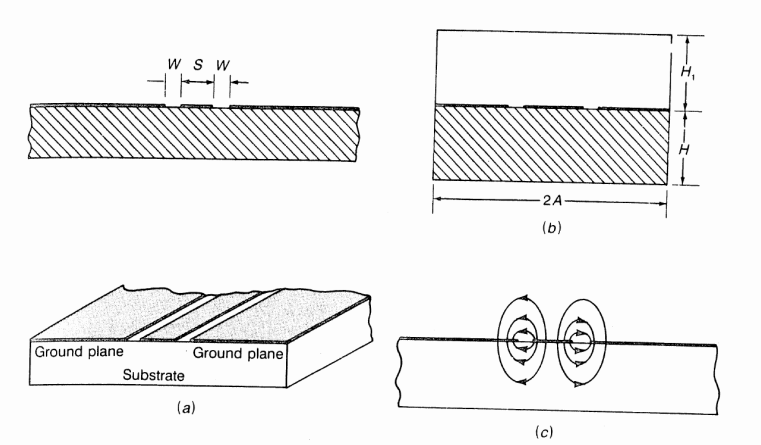

FIGURE 3.35
(*a*) Basic coplanar transmission line; (*b*) a shielded coplanar transmission line; (*c*) electric field distribution.

Glossary of terms

In this place, the following terms or expressions are used with the meaning indicated:

CPW	CoPlanar Waveguide

H01P 3/006

{Conductor backed coplanar waveguides}

Definition statement

This place covers:

Coplanar line including a ground electrode (in addition to the two electrodes of the coplanar line) on the surface opposite to the one where the strip of thin conductor is placed.

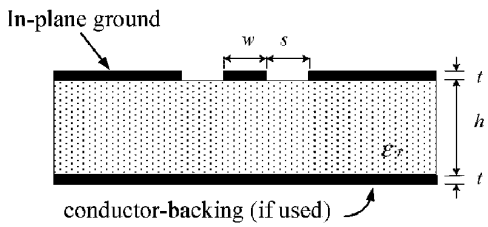

Glossary of terms

In this place, the following terms or expressions are used with the meaning indicated:

FGC	Finite Ground Coplanar

CBCPW	Conductor Backed Coplanar Waveguide

H01P 3/023

{Fin lines; Slot lines}

Definition statement

This place covers:

A fin-line is a shielded slot line.

Slot line

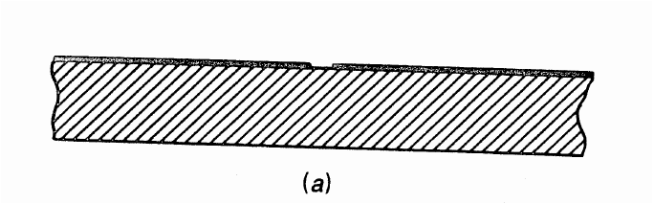

Fin-line

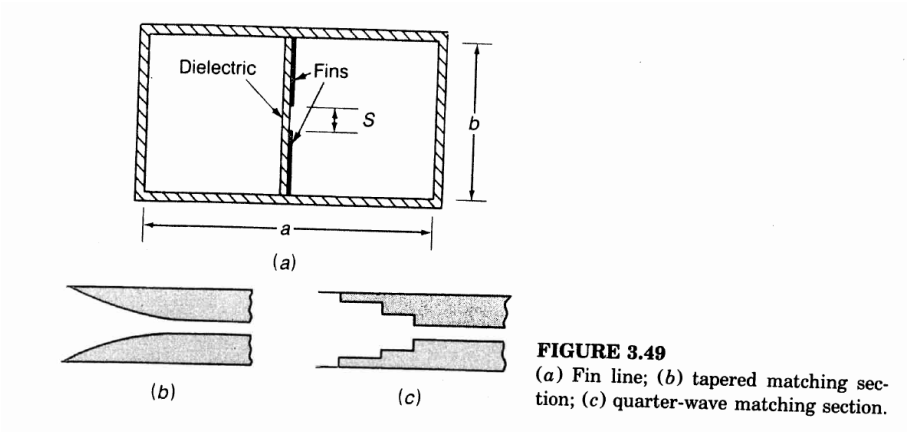

FIGURE 3.49
(*a*) Fin line; (*b*) tapered matching section; (*c*) quarter-wave matching section.

H01P 3/026

{Coplanar striplines [CPS]}

Definition statement

This place covers:

The difference between a coplanar stripline and a coplanar line/waveguide is that the coplanar stripline has, at least 2, strip line conductors provided on a substrate and without ground electrodes between them.

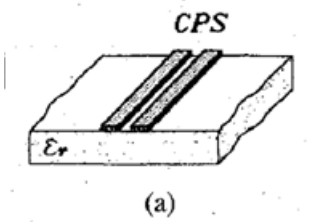

(a)

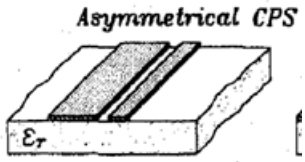

Glossary of terms

In this place, the following terms or expressions are used with the meaning indicated:

CPS	Coplanar Stripline

H01P 3/04

Lines formed as Lecher wire pairs

Definition statement

This place covers:

Basically, a high frequency transmission line comprising parallel wires.

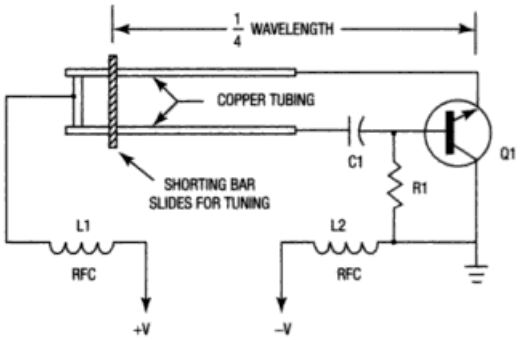

Lecher oscillator.

Lecher wire—1. A type of transmission line used to measure wavelength, consisting of a pair of wires whose electrical length is adjustable. If a source of radio frequency is coupled to one end of the line and the line is adjusted until a set of standing waves is formed, the wavelength may be determined by measurement of the distance between adjacent nodes. 2. Two parallel wires with a movable shunt that are connected to the output of a radio-frequency source and are used mainly to measure wavelengths shorter than about 10 meters.

H01P 3/06

Coaxial lines (not suitable for handling frequencies considerably beyond the audio range, {coaxial cables in general} H01B 11/18)

References

Limiting references

This place does not cover:

Coaxial connector for coaxial lines	**H01R17/12**

Special rules of classification

Coaxial cable are herein "usually" classified when the resonance frequency is a microwave resonance frequency (above 500 MHz) or there are modes (TEM) involved in the transmission of signals.

H01P 3/08

Microstrips; Strip lines

Definition statement

This place covers:

Microstrip: A conductor of width W is printed on a thin, grounded dielectric substrate of thickness d and relative permittivity e.

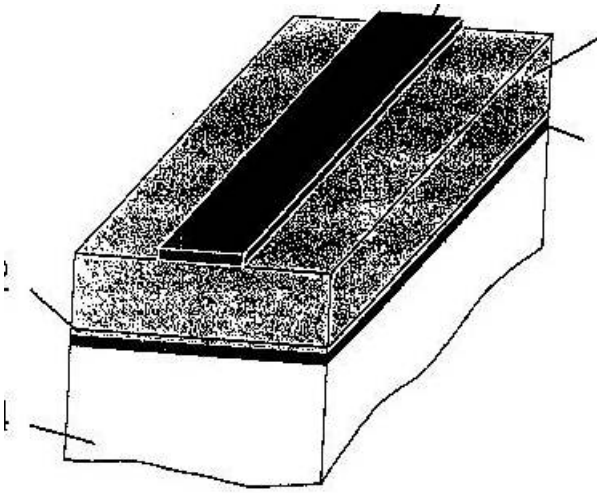

Stripline: A thin conducting strip of width W is centered between two wide conducting ground planes of separation b, and the entire region between the ground planes is filled with a dielectric.

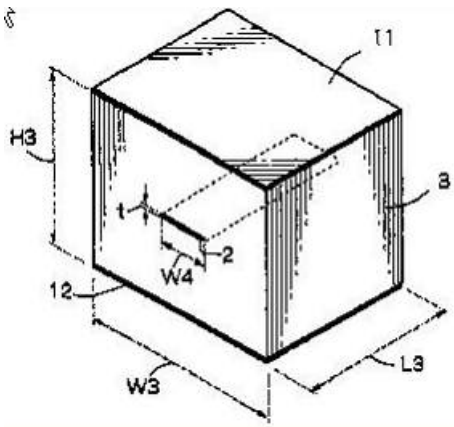

Synonyms and Keywords

In patent documents, the following words/expressions are often used as synonyms:

- "microstrip", "stripline", "strip line", "suspended line", "differencial line" and "quasi-coaxial line"

H01P 3/082

{Multilayer dielectric}

Definition statement

This place covers:

Microstrip line with a plurality of dielectric layers between the conductor line and the ground electrode.

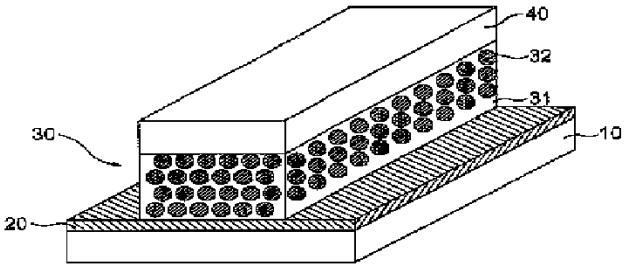

H01P 3/084

{Suspended micro-striplines}

Definition statement

This place covers:

A transmission line circuit is provided in which a layer of material is deposited on a conductive plane. Channels are formed (e.g., by etching) in material such that conductive plane is exposed. Signal traces are formed on a substrate (e.g., by etching the desired pattern in a copper sheet bonded to the substrate) which is then bonded to material such that traces are aligned with channels.

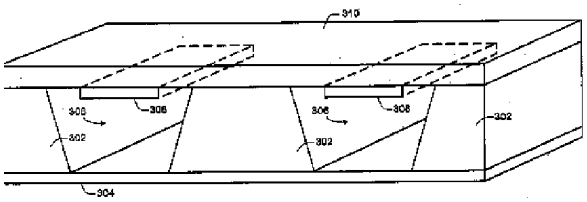

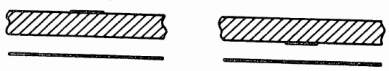

FIGURE 3.19
Suspended and inverted suspended microstrip line.

H01P 3/085

{Triplate lines}

Definition statement

This place covers:

Illustrative example of subject matter classified in H01P 3/085:

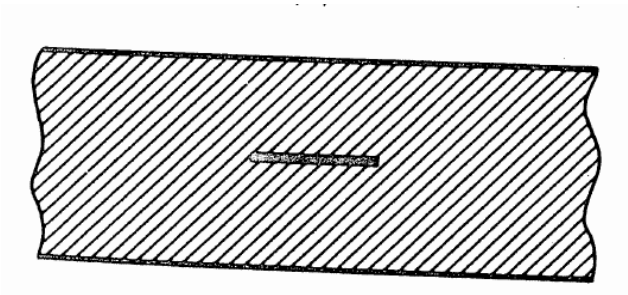

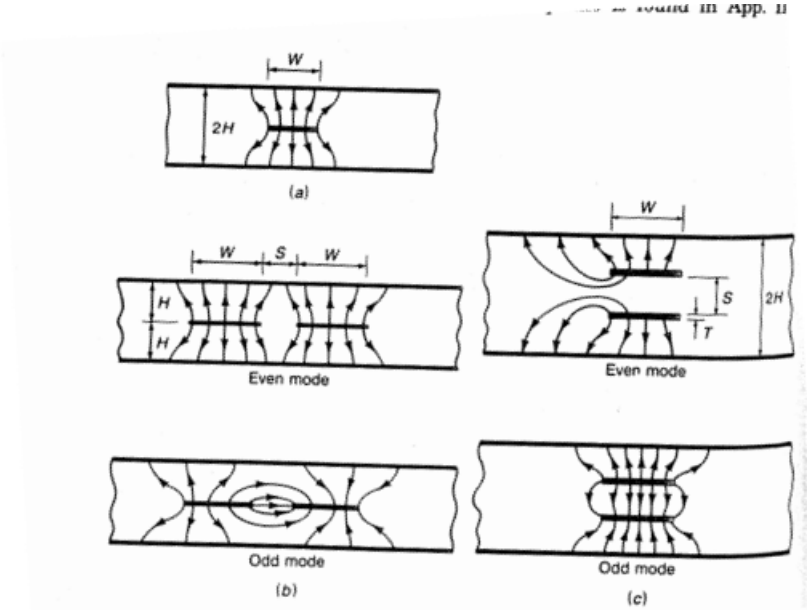

FIGURE 3.34
(*a*) The basic strip-line configuration; (*b*) coupled strip line using coplanar strips; (*c*) coupled strip line using broadside coupled strips. The electric field lines for the TEM modes are also shown.

H01P 3/087

{Suspended triplate lines}

Definition statement

This place covers:

The dielectric provided between the transmission conductor and the ground plane is air or gas.

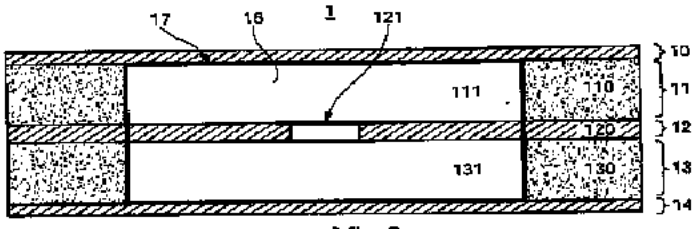

H01P 3/088

{Stacked transmission lines}

Definition statement

This place covers:

Illustrative example of subject matter classified in H01P 3/088:

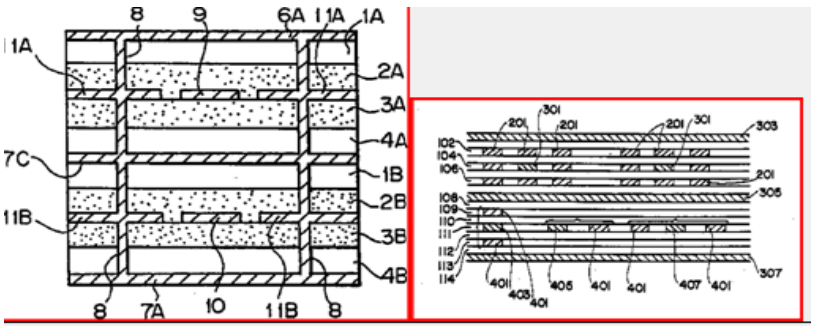

H01P 3/121

{integrated in a substrate}

Definition statement

This place covers:

Illustrative example of subject matter classified in H01P 3/121:

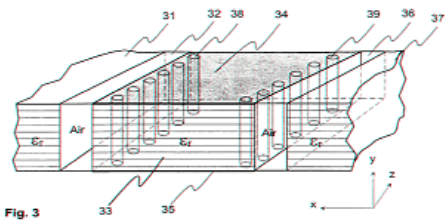

Fig. 3

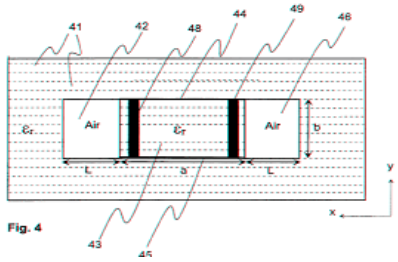

Fig. 4

References

Limiting references

This place does not cover:

The top and bottom walls are metallized on a substrate and the side walls of the waveguide are implemented with metallized vias or similar metallizations.

Posts or vias are used to delimitated the waveguide in the substrate.

Informative references

Attention is drawn to the following places, which may be of interest for search:

Printed circuit boards	H05K 1/00

Glossary of terms

In this place, the following terms or expressions are used with the meaning indicated:

SIW	Surface Integrated Waveguide

H01P 3/123

with a complex or stepped cross-section, e.g. ridged or grooved waveguides (H01P 3/14 takes precedence)

Definition statement

This place covers:

Metallic waveguides comprising a complex cross section.

See XP006017863.

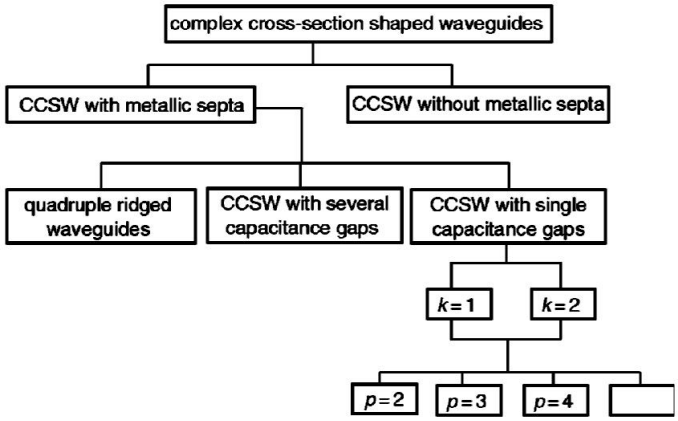

Fig. 1 *Classification scheme of waveguides with complex cross-sections*

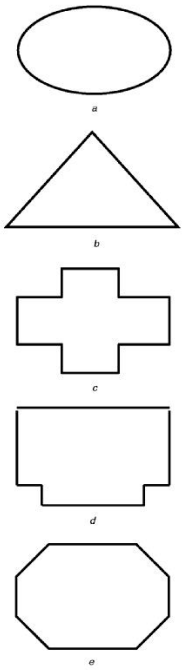

Fig. 2 *A group of CCSWs without metallic septa*
a ELW
b TRW
c CW
d RCW
e HXW

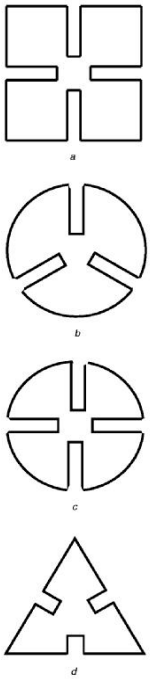

Fig. 3 *Quadruple ridged waveguides*
a Square
b Three-septa circular
c Four-septa circular
d Triangular

H01P 3/13

specially adapted for transmission of the TE_{01} circular-electric mode {(selection, promotion H01P 1/163)}

Glossary of terms

In this place, the following terms or expressions are used with the meaning indicated:

" Trapped mode"	the mode caused by reflections of wave energy between conductive discontinuities in the waveguide on opposite sides of a window member that join two different waveguides.
"Ghost modes"	Modes associated with resonant modes in the dielectric window itself (see US3594667, column 3, lines 8-26)

H01P 3/16

Dielectric waveguides, i.e. without a longitudinal conductor

Definition statement

This place covers:

Proposed by Yoneyama and Nishida in 1981, non-radiative (NRD) guide circuit is nowadays a well-known technology for millimeter-wave applications. Its basic component, the NRD waveguide, consists of a rectangular section dielectric rod (height α, width 2w, permittivity εr), sandwiched between conductiong plates that are at a distance apart less than half the free space wavelength λ0: thus, all discontinuities that maintain appropriate symmetry become purely reactive, with the advantage of a strong reduction in interference and radiation problems in integrated circuits. The same waveguiding structure, but with a larger space between the plates, was already proposed in 1953 by Tischer with a view to obtaining an ultra-low-loss waveguide, know as H guide. In this situation the non radiation condition α < λ0/2 is no linger maintained and the structure suffers the drawback of undesirable radiation effects from discontinuities.

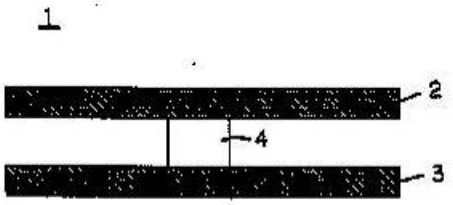

FIG. 3

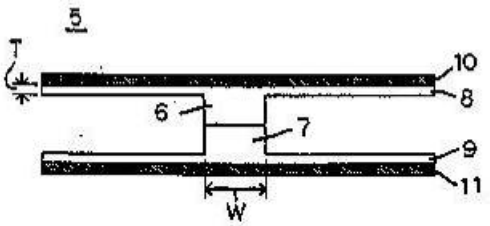

See GB2360139, US-A-4028643, US-A-4463330, US-4677404.

References

Informative references

Attention is drawn to the following places, which may be of interest for search:

The H-guide, precursor of the NRD	H01P 3/02

Synonyms and Keywords

In patent documents, the following abbreviations are often used:

NRD	Non-radiating dielectric waveguide (see H01P 3/165)

H01P 3/165

{Non-radiating dielectric waveguides}

Definition statement

This place covers:

The original NRD patent: JP57166701

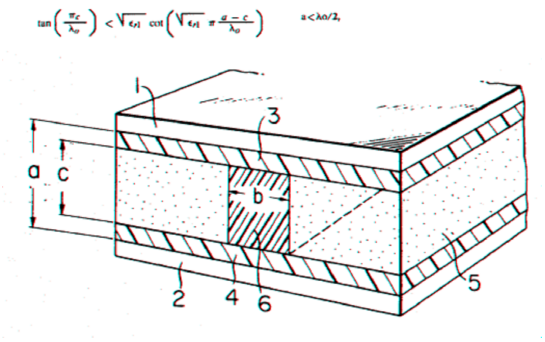

In this figure, 1 and 2 are metal layers, 3 and 4, dielectric layers and 6 is a low loss high dielectric constant dielectric.

Special rules of classification

Sometimes the term non-radiative is misspelled as "non-radioactive".

H01P 5/00

Coupling devices of the waveguide type (non-reciprocal devices H01P 1/32; for introducing or removing wave energy to or from the discharge in transit-time tubes H01J 23/36)

References

Informative references

Attention is drawn to the following places, which may be of interest for search:

Amplifiers with coupling networks	H03F 3/60, H03F 3/602, H03F 3/604 (with FET's)

H01P 5/04

with variable factor of coupling

Definition statement

This place covers:

Illustrative example of subject matter classified in H01P 5/04.

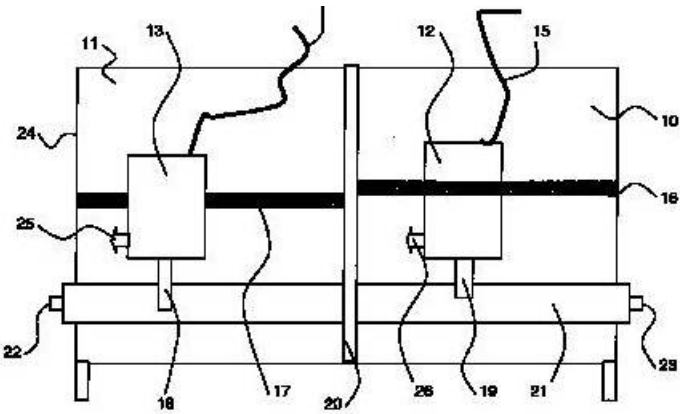

Relationships with other classification places

H03H 7/38, H01L 23/64 (Related to impedance arrangements).

H01P 5/082

{Transitions between hollow waveguides of different shape, e.g. between a rectangular and a circular waveguide}

Definition statement

This place covers:

Illustrative example of subject matter classified in H01P 5/082:

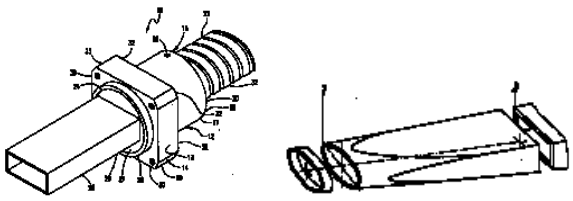

H01P 5/085

{Coaxial-line/strip-line transitions}

Relationships with other classification places

H01R17/12 (coaxial connectors) and the Keyword "wadded wire contact".

H01P 5/10

for coupling balanced with unbalanced lines or devices

Definition statement

This place covers:

Balun: Device which transforms a balanced input transmission signal to unbalanced output signals, are widely used in many application, such as balanced push pull amplifiers (H03H), antenna feed networks (H01Q) and double-balanced mixers.

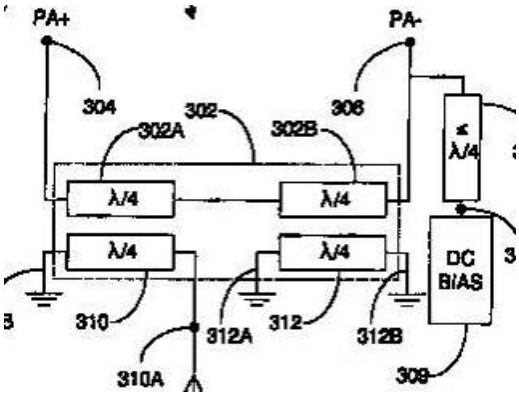

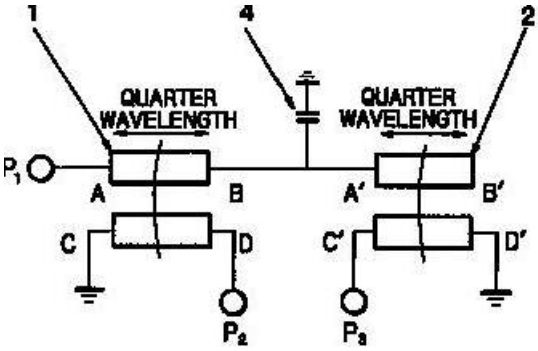

Marchand Balun: see IMDT XP001178439

The Marchand balun (see figure below) includes a first line having a length that is one half of a wavelength corresponding to an operating frequency, a second line and a third line each having a length that is one quarter of the wavelength corresponding to the operating frequency, an input terminal connected to one end of the first line, an output terminal connected to one end of the second line, and an output terminal connected to one end of the third line. The output terminals operate in pair as differential output terminals.

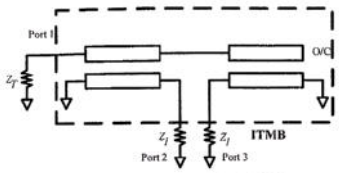

Fig. 1 The schematic of an ITMB.

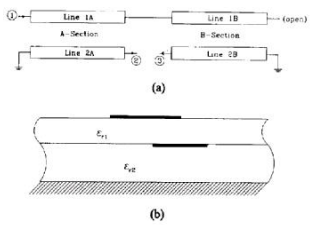

Fig. 1 The double-layer broadside-coupled Marchand balun (a) and the employed microstrip-line structure (b).

Relationships with other classification places

Phase inverters in H03H 7/42.

Glossary of terms

In this place, the following terms or expressions are used with the meaning indicated:

Balun, symetriseur	Balance-Unbalanced coupling device

H01P 5/107

Hollow-waveguide/strip-line transitions

Definition statement

This place covers:

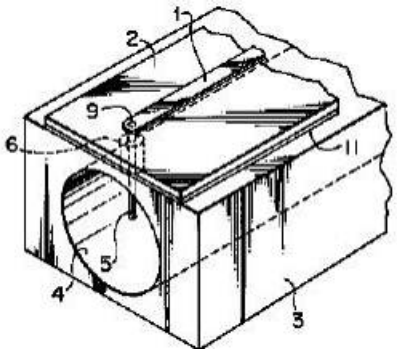

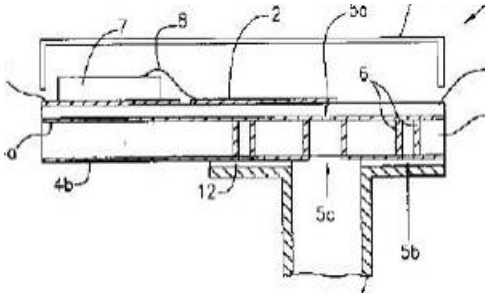

SMT (surface mount technology)

Relationships with other classification places

H01P 7/065: when it is referring to a waveguide cavity in the PCB.

Look also in:

H01P 1/161: sustaining two independent orthogonal modes, e.g. orthomode transducer (combining or separating polarisations and frequencies H01P 1/2131)

H01P 1/17: for producing a continuously rotating polarisation, e.g. circular polarisation

H01P 5/16

Conjugate devices, i.e. devices having at least one port decoupled from one other port

Definition statement

This place covers:

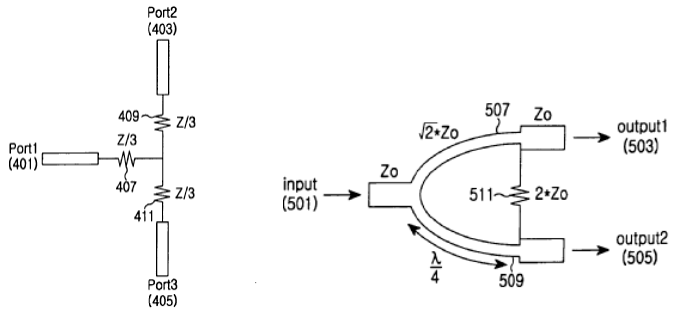

Reference document: E. Wilkinson: "An N-way Hybrid Power divider", IEEE Trans., vol. MTT-8, pp 116-118

Relationships with other classification places

H03H 7/185 Multiple networks...comprising distributed impedance elements together with lumped impedance elements.

Glossary of terms

In this place, the following terms or expressions are used with the meaning indicated:

Wilkinson power divider	N-way power divider that splits the input power into output power at N ports and that also provides isolationbetween the output powers.

H01P 5/18

consisting of two coupled guides, e.g. directional couplers

Definition statement

This place covers:

Directional couplers are four-port circuits where one port is isolated from the input port. All four ports are (ideally) matched, and the circuit is (ideally) lossless.

What do we mean by "directional"? A directional coupler has four ports, where one is regarded as the input, one is regarded as the "through" port (where most of the incident signal exits), one is regarded as the coupled port (where a fixed fraction of the input signal appears, usually expressed in dB), and an isolated port, which is usually terminated. If the signal is reversed so that it enter the "though" port, most of it exits the "input" port, but the coupled port is now the port that was previously regarded as the "isolated port". The coupled port is a function of which port is the incident port.

Looking at the generic directional coupler schematic above, if port 4 is the incident port, port 3 is the transmitted port (because it is connected with a straight line). Either port 1 or port 2 is the coupled port, and the other is the isolated port, depending on whether the coupling mode is forward or backward.

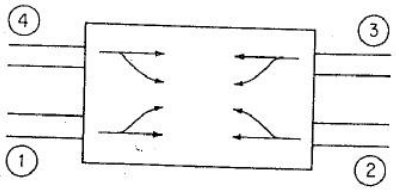

H01P 5/184

{the guides being strip lines or microstrips}

Definition statement

This place covers:

The couplers can be divided depending on the coupling between the lines (see following classification)

It can be a weak coupling:

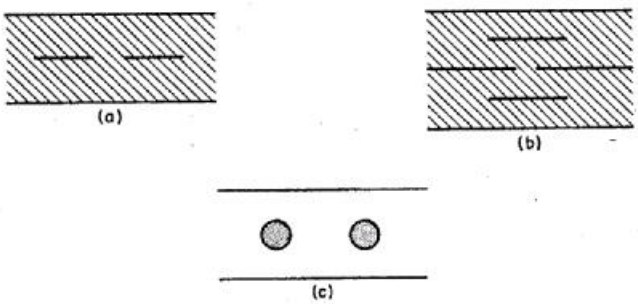

WEAK COUPLING CONFIGURATIONS

or a tight coupling (couping <= 3 dB)

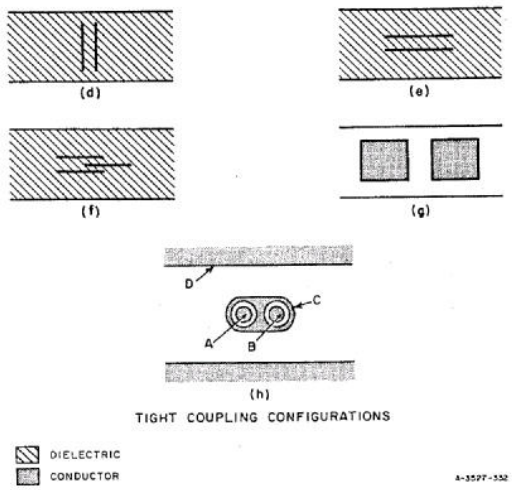

TIGHT COUPLING CONFIGURATIONS

H01P 5/185

{Edge coupled lines}

Definition statement

This place covers:

Weak coupling is associated with edge coupling (except Lange couplers (see H01P 5/186)).

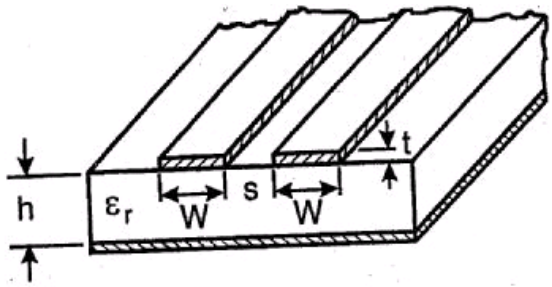

Figure 3.20 Edge-coupled microstrip lines.

H01P 5/186

{Lange couplers}

Definition statement

This place covers:

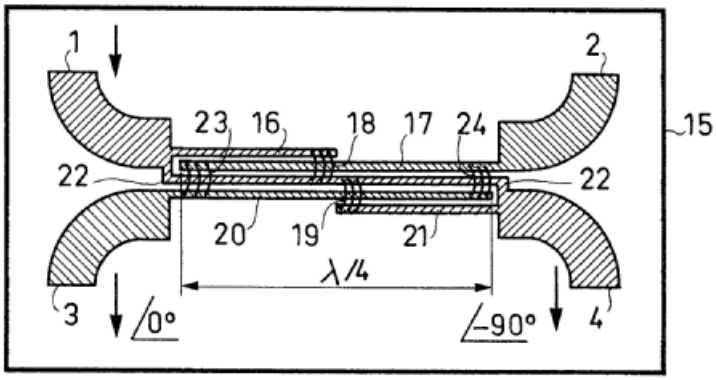

Lange couplers are generally used to couple electromagnetic energy between transmission lines. In a four port hybrid, there is an input port and a direct port, these two ports being directly and conductively connected to each other, as well as a coupled port, the latter being connected to transmission lines coupled electromagnetically (inductively and capacitively) to the conductors extending between the input and direct ports.

In a Lange type coupler, each strip conductor is divided into mutually parallel sections, and the conductor sections from the two different strip conductors are interdigitated, so that each strip section is located between two sections from the other conductor. In a planar arrangement, it is necessary to have cross-over connectors in order to establish a direct conductive connection between the various sections extending in parallel.

H01P 5/187

{Broadside coupled lines}

Definition statement

This place covers:

Tight coupling is generally associated with broadband coupling.

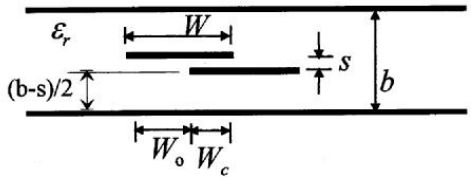

Figure 3.35 Broadside coupled off-set striplines.

H01P 5/20

Magic-T junctions

Definition statement

This place covers:

The magic-T is a combination of the H-type and E-type T junctions.

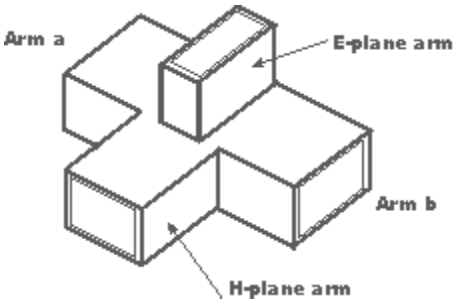

Magic T waveguide junction

The diagram above depicts a simplified version of the Magic T waveguide junction with its four ports.

To look at the operation of the Magic T waveguide junction, take the example of when a signal is applied into the "E plane" arm. It will divide into two out of phase components as it passes into the leg consisting of the "a" and "b" arms. However no signal will enter the "H plane" arm as a result of the fact that a zero potential exists there - this occurs because of the conditions needed to create the signals in the "a" and "b" arms. In this way, when a signal is applied to the H plane arm, no signal

appears at the "E plane" arm and the two signals appearing at the "a" and "b" arms are 180° out of phase with each other.

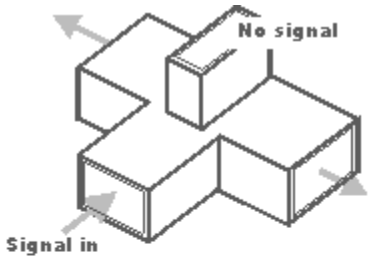

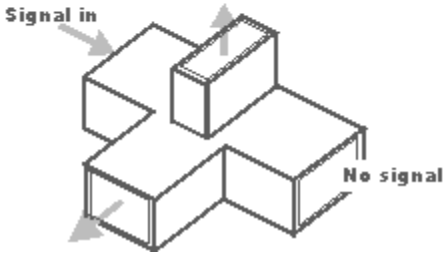

Magic T waveguide junction signal directions

When a signal enters the "a" or "b" arm of the magic T waveguide junction, then a signal appears at the E and H plane ports but not at the other "b" or "a" arm as shown.

H01P 5/222

{180° rat race hybrid rings}

Definition statement

This place covers:

Illustrative example of subject matter classified in H01P 5/222:

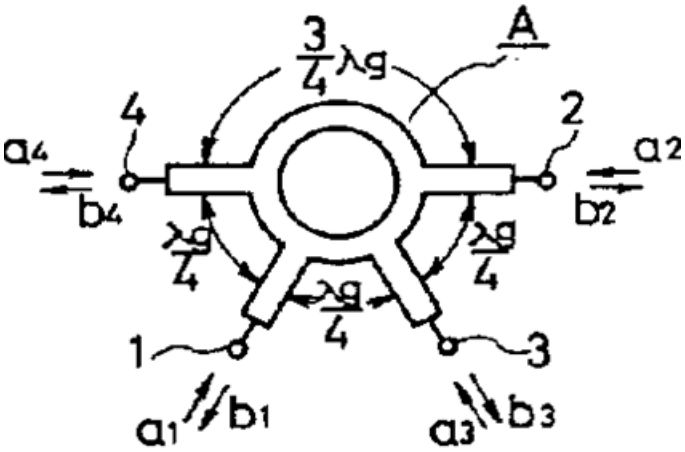

H01P 5/225

{180° reversed phase hybrid rings}

Definition statement

This place covers:

FIG. 3

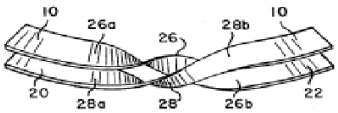

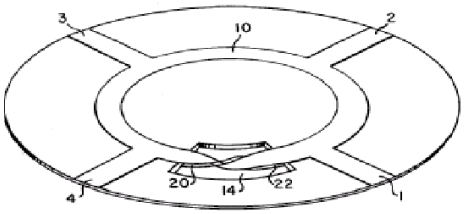

FIG. 4

See US4023123.

H01P 5/227

{90° branch line couplers}

Definition statement

This place covers:

Illustrative example of subject matter classified in H01P 5/227:

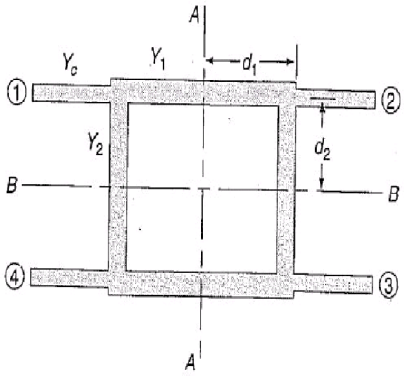

FIGURE 6.29
A branch-line directional coupler.

H01P 7/00

Resonators of the waveguide type ({variable impedance transformers H01P 5/04}; structurally associated with transit-time tubes and interacting with the discharge therein H01J 23/18; {generators of electronic oscillations using resonators of this type H03B 5/18, H03B 7/14, H03B 9/14; electronic amplifiers using resonators of this type H03F 3/54}; microwave heating devices H05B 6/64)

References

Informative references

Attention is drawn to the following places, which may be of interest for search:

Construction of impedance networks...	H03H 1/00
One port networks comprising passive electrical elements...	H03H 5/00
Multiple port networks with passive electrical elements...	H03H 7/00

H01P 7/06

Cavity resonators

References

Informative references

Attention is drawn to the following places, which may be of interest for search:

Cavity resonators	H01J 23/20

H01P 7/065

{integrated in a substrate}

Definition statement

This place covers:

Illustrative example of subject matter classified in H01P 7/065:

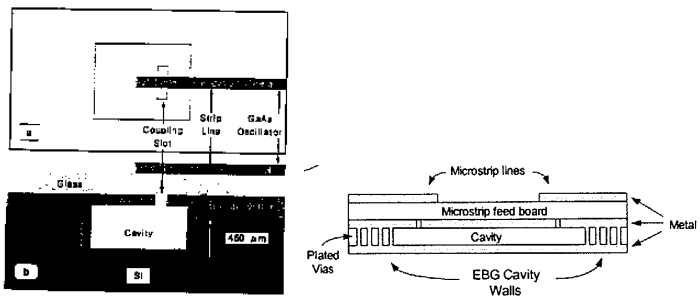

H01P 7/082

{Microstripline resonators (H01P 7/088 takes precedence)}

Definition statement

This place covers:

The basic structure of a microstrip line resonator consists of a ground electrode formed on one surface of a dielectric plate and a microstrip line electrode formed on the other surface.

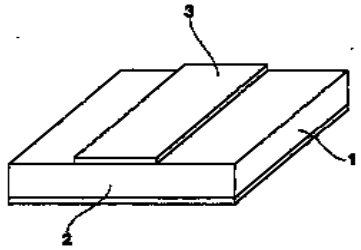

Microstrip line having four self-resonant spiral resonators on a dielectric structure.

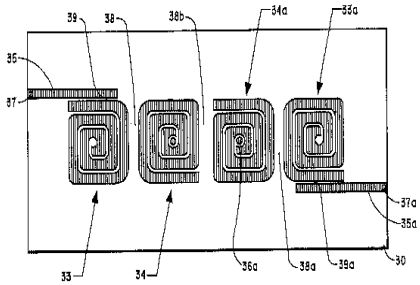

The microstrip ring resonator may be any strip of circular, elliptic or quadrate shape.

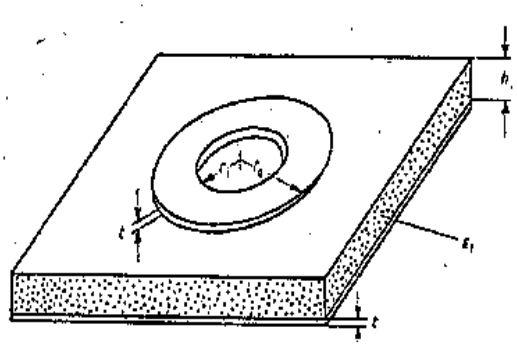

A rectangular micostrip disk can be considered as a degenerated microstrip line having line-width w and line-area π*ro2

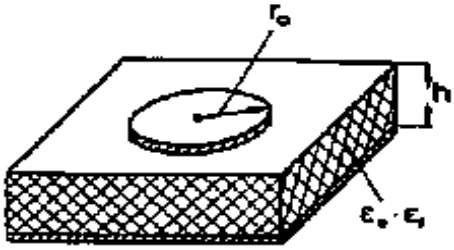

The microstrip loop resonator A consists of a meander loop of four identical arms (each of which may be taken as a meander line).

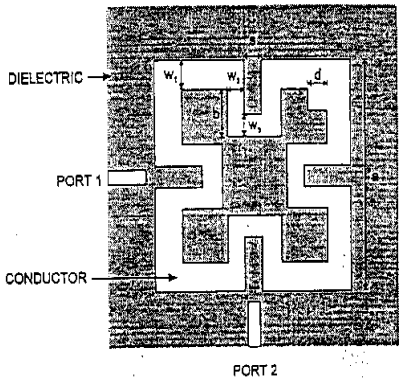

The microstrip loop resonator B includes an open conductive loop with folded transmission line segments extending from the adjacent ends of the loop formed on dielectric substrate.

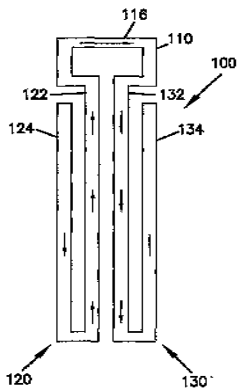

The hairpin resonator disposes a substrate of finite thickness is embedded inside a shielding box and is used as support for the metallized plane.

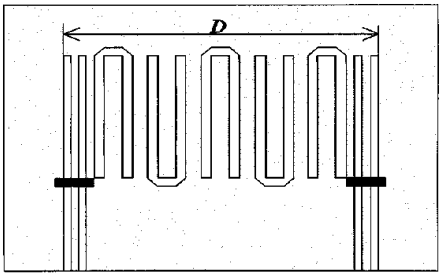

H01P 7/084

{Triplate line resonators (H01P 7/088 takes precedence)}

Synonyms and Keywords

In patent documents, the following words/expressions are often used as synonyms:

- "stripline" and "strip line resonator"

H01P 7/086

{Coplanar waveguide resonators (H01P 7/088 takes precedence)}

Definition statement

This place covers:

Dielectric structure in which ground conductors share the same plane defined by the conductor.

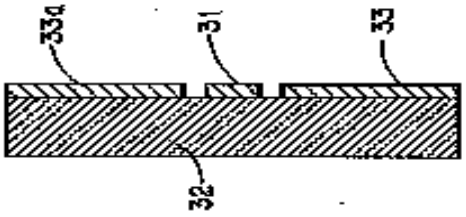

Coplanar resonator formed with a conductor ground plane provided on the opposite side of the dielectric.

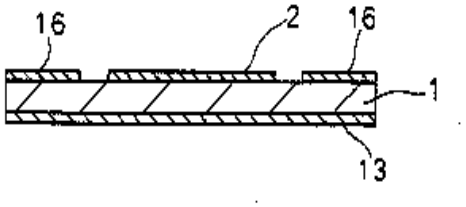

H01P 7/088

{Tunable resonators}

Definition statement

This place covers:

The tunable resonator shown below, includes a resonator coil and a variable capacitance portion. The variable capacitance portion tunes the tunable resonator.

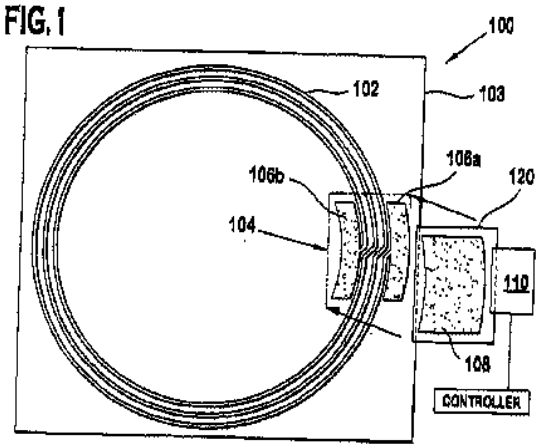

H01P 7/10

Dielectric resonators

References

Informative references

Attention is drawn to the following places, which may be of interest for search:

Generation of oscillators...with frequency determining element comprising distributed inductance and capacitance.	H03B 5/18

H01P 9/00

Delay lines of the waveguide type (structurally associated with transit-time tubes and interacting with the discharge therein H01J 23/24)

Definition statement

This place covers:

Delay equalization corresponds to adjusting the relative phases of different frequencies to achieve a constant group delay.

References

Informative references

Attention is drawn to the following places, which may be of interest for search:

Shaping pulses with delay elements (lines)	H03K 5/06

H01P 11/00

Apparatus or processes specially adapted for manufacturing waveguides or resonators, lines, or other devices of the waveguide type (manufacture of coaxial cables H01B 13/00)

References

Informative references

Attention is drawn to the following places, which may be of interest for search:

Manufacture of coaxial cable	H01B 13/00
Manufacturing of antennas	H01Q 15/141 and subgroups, H01Q 13/0283, H01Q 21/0087

H01P 11/001

{Manufacturing waveguides or transmission lines of the waveguide type}

References

Informative references

Attention is drawn to the following places, which may be of interest for search:

Optical waveguides	G02B 6/10

H01P 11/002

{Manufacturing hollow waveguides}

References

Informative references

Attention is drawn to the following places, which may be of interest for search:

Manufacturing tubes	B21C 37/15 and subgroups

H01P 11/003

{Manufacturing lines with conductors on a substrate, e.g. strip lines, slot lines}

Synonyms and Keywords

In patent documents, the following words/expressions are often used as synonyms:

- "etching", "manufacturing", " deposition" and "sputtering"