H01J

ELECTRIC DISCHARGE TUBES OR DISCHARGE LAMPS (spark-gaps H01T; arc lamps with consumable electrodes H05B; particle accelerators H05H)

Definition statement

This place covers:

- Devices, i.e. electric discharge tubes or discharge lamps, for producing, influencing, or using a flow of electrons or ions, and having a closed or substantially closed casing containing a chosen gas, vapour, or vacuum, upon the pressure and nature of which the characteristics of the device depend. Examples include devices for controlling, indicating, or switching electric current, counting electric pulses, producing light or other electromagnetic oscillations, such as X-rays, or for separating or analysing radiation or particles.
- Details of electric discharge tubes or discharge lamps, including details applicable to both discharge devices and incandescent lamps.
- Apparatus or processes specially adapted for the manufacture of electric discharge tubes, discharge lamps, or parts thereof, including apparatus and processes for manufacture applicable to both discharge devices and incandescent lamps.
- Recovery of material from discharge tubes or discharge lamps.

In particular:

AC-PDP

DC-PDP

Vacuum tubes

Transit-time tubes, e.g. Klystrons, travelling wave tubes, magnetrons

Ion beam tubes

Cathode ray tubes and electron beam tubes, in particular electron emission (e.g. field emission) display panels

Discharge tubes with provision for emergence of electrons or ions from the vessel

X-ray tubes

Discharge tubes with provision for introducing objects or material to be exposed to the discharge

Photoelectric discharge tubes not involving the ionisation of gas

Discharge tubes for measuring pressure of introduced gas or for evacuation by diffusion of ions

Secondary emission tubes or electron-multiplier tubes

Discharge tubes functioning as thermionic generators

Tubes for determining the presence, intensity or energy or radiation or particles

Particle spectrometer or separator tubes

Gas- or vapour-discharge lamps

Cathode-ray or electron stream lamps, in particular flat panel electron emission lamps as LCD backlight

Lamps without any electrode inside the vessel or with at least one main electrode outside the vessel

Apparatus or processes specially adapted to the manufacture thereof

References

Limiting references

This place does not cover:

Emission spectrometry	G01J 3/443
Electrical connectors separable from the tube	H01R
Spark gaps, including gas-filled spark gaps	H01T
Arc lamps with consumable electrodes	H05B
Plasma discharge EUV light sources in which a gas is locally compressed to create a discharge space and then allowed to expand into a vacuum	H05G
Particle accelerators	H05H

Application-oriented references

Examples of places where the subject matter of this place is covered when specially adapted, used for a particular purpose, or incorporated in a larger system:

Isotope separation using separate tubes	B01D 59/44
Investigating or analyzing electrically excited material, e.g. electroluminescence	G01N 21/66
Analyzing materials by investigating the ionization of gases; by investigating electric discharges, e.g. emission of cathode	G01N 27/62
Mass spectrometers specially adapted for column chromatography	G01N 30/72
Investigating or analyzing surface structures in atomic ranges using scanning-probe techniques	G01Q 10/00 - G01Q 90/00
Details of scanning-probe apparatus in general	G01Q 10/00- G01Q 90/00
Contactless testing of electronic circuits using electron beams	G01R 31/305
Electrostatic dosimeters in general	G01T 1/14
Secondary-emission measurement of nuclear or X-radiation	G01T 1/28
Gas lasers pumped by electric discharges	H01S
Generating ions to be introduced into non-enclosed gases	H01T 23/00
Tubes for generating potential differences by charges carried on a gas stream	H02N
Light sources using a combination of discharge and other kinds of light generation (other than those covered in group H01J 61/96)	H05B 35/00
Generating plasma in general	H05H 1/24

Informative references

Attention is drawn to the following places, which may be of interest for search:

Liquid crystal displays (LCD)	G02F 1/13
Electric incandescent lamps	H01K
Displays using organic light-emitting diodes (OLED)	H01L 27/32

Special rules of classification

In this subclass, groups H01J 1/00-H01J 7/00 relate only to:

- Details of an unspecified kind of discharge tube or lamp, or
- Details mentioned in a specification as applicable to two or more kinds of tubes or lamps as defined by groups H01J 11/00-H01J 17/00, H01J 21/00, H01J 25/00-H01J 27/00, H01J 31/00-H01J 41/00, H01J 47/00-H01J 65/00, hereinafter called basic kinds.
- A detail only described with reference to or clearly only applicable to discharge tubes or discharge lamps of a single basic kind is covered by the detail group appropriate to discharge tubes or discharge lamps of that basic kind, wherein plasma display panels of H01J 11/00, H01J 17/00, electron emission display panels of H01J 31/00 and flat panel electron emission lamps as LCD backlight of H01J 63/00 are considered as a single basic kind.

In this subclass, group H01J 9/00 relates to apparatus or processes specially adapted for the manufacture of electric discharge tubes, discharge lamps, or parts thereof.

Glossary of terms

In this place, the following terms or expressions are used with the meaning indicated:

Lamp	In this subclass, "lamp" includes tubes emitting visible, ultra-violet or infra-red light.
Spark Gap	A "spark gap" is an enclosed or non-enclosed discharge device having cold electrodes and used exclusively to discharge a quantity of electrical energy in a small time duration.
Spectrometer	An instrument used to disperse radiant energy or particles into a spectrum and measure properties such as wavelength, mass, energy, or index of refraction.

H01J 1/00

Details of electrodes, of magnetic control means, of screens, or of the mounting or spacing thereof, common to two or more basic types of discharge tubes or lamps (details of electron-optical arrangements or of ion traps H01J 3/00)

Definition statement

This place covers:

Details of electrodes, or magnetic control means, of screens, or of the mounting or spacing thereof, of an unspecified kind of discharge tube or discharge lamp, e.g. a CNT-based field emission device, or of two or more kinds of discharge tubes or discharge lamps as defined by groups H01J 11/00, H01J 13/00, H01J 15/00, H01J 17/00, H01J 21/00, H01J 25/00, H01J 27/00, H01J 31/00, H01J 33/00, H01J 35/00, H01J 37/00, H01J 40/00, H01J 41/00, H01J 43/00, H01J 45/00, H01J 47/00, H01J 49/00, H01J 61/00, H01J 63/00 or H01J 65/00, hereinafter called basic kinds, wherein plasma display panels of H01J 11/00, H01J 17/00, electron emission display panels of H01J 31/00 and flat panel electron emission lamps as LCD backlight of H01J 63/00 are considered as a single basic kind.

References

Limiting references

This place does not cover:

Details of electron-optical arrangements or of ion traps	H01J 3/00

Details only described with reference to or clearly only applicable to discharge tubes or discharge lamps of a single basic kind	H01J 11/00, H01J 13/00, H01J 15/00, H01J 17/00, H01J 21/00, H01J 25/00, H01J 27/00, H01J 31/00, H01J 33/00, H01J 35/00, H01J 37/00, H01J 40/00, H01J 41/00, H01J 43/00, H01J 45/00, H01J 47/00, H01J 49/00, H01J 61/00, H01J 63/00, H01J 65/00

Informative references

Attention is drawn to the following places, which may be of interest for search:

Apparatus or processes specially adapted for the manufacture of details of H01J 1/00	H01J 9/00

Electrodes and electron emitters

Micro-structural devices or systems and manufacture thereof	B81B, B81C
Nano-structures and manufacture thereof	B82B
Nanotechnology	B82Y
Carbon and compounds thereof; manufacture thereof, e.g. carbon nanotubes [CNT] and manufacture thereof	C01B 31/00, C01B 31/022
Metal coating of glasses	C03C 17/06
Multilayer metal coating of glasses	C03C 17/36
PZT (lead zirconate titanate) emitter materials and manufacture thereof	C04B 35/491
Metallurgy	C21, C22
Metal alloys	C22C
Coating (e.g. of metal or dielectric materials)	C23C
Deposition of carbon by e.g. chemical vapour deposition	C23C 16/26
Electrolytic or electrophoretic production of coatings, e.g of CNT and carbon fibres on a substrate	C25D, C25D 15/00
Secondary-emission detectors for measurement of nuclear or X-radiation	G01T 1/28
Photolithographic production of patterned surfaces; photosensitive materials therefor	G03F 7/00
Conductors or conductive bodies characterised by the conductive materials; Selection of materials as conductors	H01B 1/00
Filaments for incandescent lamps	H01K 1/02

Luminescent screens

Luminescent materials or compositions	C09K 11/00

Special rules of classification

- Details are classified in H01J 1/00 and - in case of a more detailed relevant Indexing Code subgroup - also in H01J 2201/00.
- If in field emission devices the cathode structure or material is the relevant detail, classification is provided in H01J 1/30-H01J 1/316 and, where applicable, H01J 2201/30-H01J 2201/317. If however the control electrode structure of the field emission devices (i.e. form/structure, material or relative arrangement of the gate electrode(s) or the focussing electrode(s)) is the relevant detail, classification is provided in H01J 3/021-H01J 3/022 and, where applicable, H01J 2203/0204-H01J 2203/0292.If the cathode structure or material of a general field emission device and of a field emission display or a flat panel electron emission lamp (as LCD backlight) is disclosed, classification is provided in H01J 1/30-H01J 1/316 and in H01J 29/04, H01J 2329/04-H01J 2329/0492, H01J 31/127 or H01J 63/00.
- Carbon nanotube (CNT) emitters are classified in H01J 1/304 and H01J 2201/30469, the manufacture thereof in H01J 9/025. When the CNT material or the manufacture thereof is of interest, also C01B 31/00 or C01B 31/022 is assigned. PZT (lead zirconate titanate) emitter materials are classified in the respective ECLA subgroup of H01J 1/30, e.g. H01J 1/316, in H01J 2201/306 and C04B 35/491.

Synonyms and Keywords

In patent documents, the following abbreviations are often used:

FED	field emission device / display
CNT	carbon nanotube(s)

H01J 1/22

Heaters (filaments for incandescent lamps H01K 1/02)

References

Informative references

Attention is drawn to the following places, which may be of interest for search:

Heating arrangements for discharge tubes with liquid-pool cathodes	H01J 13/32
Filaments for incandescent lamps	H01K 1/02

H01J 1/312

having an electric field perpendicular to the surface, e.g. tunnel-effect cathodes of Metal-Insulator-Metal [MIM] type {(H01J 1/304 - H01J 1/308 take precedence)}

References

Limiting references

This place does not cover:

Field-emissive cathodes	H01J 1/304
Semiconductor cathodes, e.g. cathodes with PN junction layers	H01J 1/308

H01J 1/32

Secondary-electron-emitting electrodes (H01J 1/35 takes precedence; luminescent screens H01J 1/62; charge storage screens in general H01J 1/78; charge storage screens using secondary emission for image tubes H01J 29/41; dynodes for secondary emission tubes H01J 43/10; secondary-emission detectors for measurement of nuclear or X-radiation G01T 1/28)

References

Limiting references

This place does not cover:

Electrodes exhibiting both secondary emission and photo-emission	H01J 1/35

Informative references

Attention is drawn to the following places, which may be of interest for search:

Luminescent screens	H01J 1/62
Charge storage screens in general	H01J 1/78
Charge storage screens using secondary emission for image tubes	H01J 29/41
Dynodes for secondary emission tubes	H01J 43/10
Secondary-emission detectors for measurement of nuclear or X-radiation	G01T 1/28

H01J 1/34

Photo-emissive cathodes (H01J 1/35 takes precedence; photoelectric screens H01J 1/78)

References

Limiting references

This place does not cover:

Electrodes exhibiting both secondary emission and photo-emission	H01J 1/35

Informative references

Attention is drawn to the following places, which may be of interest for search:

Photoelectric screens	H01J 1/78

H01J 1/42

Cooling of anodes (cooling rotary anodes H01J 1/44); Heating of anodes

References

Limiting references

This place does not cover:

Cooling rotary anodes	H01J 1/44

H01J 1/46

Control electrodes, e.g. grid (for igniting arrangements H01J 7/30); Auxiliary electrodes (auxiliary anodes for maintaining a discharge H01J 1/36)

References

Informative references

Attention is drawn to the following places, which may be of interest for search:

Auxiliary anodes for maintaining a discharge	H01J 1/36
Electrodes for igniting arrangements	H01J 7/30

H01J 1/52

Screens for shielding (screens acting as control electrodes H01J 1/46); Guides for influencing the discharge; Masks interposed in the electron stream

References

Limiting references

This place does not cover:

Screens acting as control electrodes	H01J 1/46

H01J 1/90

Insulation between electrodes or supports within the vacuum space (leading-in conductors H01J 5/46)

References

Limiting references

This place does not cover:

Leading-in conductors	H01J 5/46

H01J 1/94

Mountings for individual electrodes (for directly-heated cathodes H01J 1/15)

References

Informative references

Attention is drawn to the following places, which may be of interest for search:

Mountings for directly-heated cathodes	H01J 1/15

H01J 3/00

Details of electron-optical or ion-optical arrangements or of ion traps common to two or more basic types of discharge tubes or lamps

Definition statement

This place covers:

Details of electron-optical or ion-optical arrangements or of ion traps of an unspecified kind of discharge tube or discharge lamp, or of two or more kinds of discharge tubes or discharge lamps as defined by groups H01J 11/00, H01J 13/00, H01J 15/00, H01J 17/00, H01J 21/00, H01J 25/00, H01J 27/00, H01J 31/00, H01J 33/00, H01J 35/00, H01J 37/00, H01J 40/00, H01J 41/00, H01J 43/00, H01J 45/00, H01J 47/00, H01J 49/00, H01J 61/00, H01J 63/00 or H01J 65/00, hereinafter called basic kinds, wherein plasma display panels of H01J 11/00, H01J 17/00, electron emission display panels of H01J 31/00 and flat panel electron emission lamps as LCD backlight of H01J 63/00 are considered as a single basic kind.

In particular: Electron/ion guns of an unspecified electron/ion beam tube and control electrode structures of a field emission device.

References

Limiting references

This place does not cover:

Details only described with reference to or clearly only applicable to discharge tubes or discharge lamps of a single basic kind	H01J 11/00, H01J 13/00, H01J 15/00, H01J 17/00, H01J 21/00, H01J 25/00, H01J 27/00, H01J 31/00, H01J 33/00, H01J 35/00, H01J 37/00, H01J 40/00, H01J 41/00, H01J 43/00, H01J 45/00, H01J 47/00, H01J 49/00, H01J 61/00, H01J 63/00, H01J 65/00

Informative references

Attention is drawn to the following places, which may be of interest for search:

Apparatus or processes specially adapted for the manufacture of details of H01J 3/00	H01J 9/00
Ion guns of ion beam tubes	H01J 27/02
Electron guns of - cathode ray tubes and electron beam tubes - discharge tubes with provision for introducing objects or material to be exposed to the discharge	H01J 29/48, H01J 37/06
Arrangements for handling radiation or particles, e.g. focusing, moderating	G21K 1/00
Circuit arrangements for producing sawtooth pulses or other deflecting voltages or currents	H03K
Particle accelerators	H05H 3/00 - H05H 15/00

Special rules of classification

- Details are additionally classified using the relevant Indexing Codes of H01J 2203/00.

- Control electrode structures of field emission devices (i.e. structures where the form/structure, material or relative arrangement of the gate electrode(s) or the focussing electrode(s) is the relevant detail) are classified in H01J 3/021-H01J 3/022 and, where applicable, H01J 2203/0204-H01J 2203/0292 (i.e. under "electron guns"). If only the cathode structure or material is the relevant detail, classification is provided in H01J 1/30-H01J 1/316 and, where applicable, H01J 2201/30-H01J 2201/317.
- If the control structures of a general field emission device and of a field emission display or a flat panel electron emission lamp (as LCD backlight) is disclosed, classification is provided in H01J 3/021-H01J 3/022 and H01J 29/467, H01J 29/481, H01J 2329/4604-H01J 2329/4695, H01J 31/127 or H01J 63/00.

Synonyms and Keywords

In patent documents, the following abbreviations are often used:

FED	field emission device / display

H01J 3/02

Electron guns {(electron guns for discharge tubes with provision for introducing objects or material to be exposed to the discharge H01J 37/06; for cathode ray tubes H01J 29/48)}

References

Informative references

Attention is drawn to the following places, which may be of interest for search:

Electron guns for cathode ray tubes	H01J 29/48
Electron guns for discharge tubes with provision for introducing objects or material to be exposed to the discharge	H01J 37/06

H01J 3/06

two or more guns being arranged in a single vacuum space, e.g. for plural-ray tubes (H01J 3/07 takes precedence {see provisionally also H01J 29/46 - H01J 29/84})

References

Limiting references

This place does not cover:

Arrangements for controlling convergence of a plurality of beams	H01J 3/07

H01J 3/08

Arrangements for controlling intensity of ray or beam (H01J 3/02, H01J 3/04 take precedence {see provisionally also H01J 29/46 - H01J 29/84})

References

Limiting references

This place does not cover:

Electron guns	H01J 3/02
Ion guns	H01J 3/04

H01J 3/10

Arrangements for centering ray or beam (H01J 3/02, H01J 3/04 take precedence {see provisionally also H01J 29/46 - H01J 29/84})

References

Limiting references

This place does not cover:

Electron guns	H01J 3/02
Ion guns	H01J 3/04

H01J 3/12

Arrangements for controlling cross-section of ray or beam; Arrangements for correcting aberration of beam, e.g. due to lenses (H01J 3/02, H01J 3/04 take precedence {see provisionally also H01J 29/46 - H01J 29/84})

References

Limiting references

This place does not cover:

Electron guns	H01J 3/02
Ion guns	H01J 3/04

H01J 3/14

Arrangements for focusing or reflecting ray or beam (H01J 3/02, H01J 3/04 take precedence {see provisionally also H01J 29/46 - H01J 29/84})

References

Limiting references

This place does not cover:

Electron guns	H01J 3/02
Ion guns	H01J 3/04

H01J 3/26

Arrangements for deflecting ray or beam (circuit arrangements for producing saw-tooth pulses or other deflecting voltages or currents H03K; {H01J 29/46 - H01J 29/84 and H01J 37/147 take precedence})

References

Limiting references

This place does not cover:

Arrangements of electrodes and associated parts for generating or controlling the ray or beam, e.g. electron-optical arrangement	H01J 29/46
Arrangements for directing or deflecting the discharge along a desired path	H01J 37/147

Informative references

Attention is drawn to the following places, which may be of interest for search:

Circuit arrangements for producing saw-tooth pulses or other deflecting voltages or currents	H03K

H01J 5/00

Details relating to vessels or to leading-in conductors common to two or more basic types of discharge tubes or lamps

Definition statement

This place covers:

Details relating to vessels or to leading-in conductors of an unspecified kind of discharge tube or discharge lamp, or of two or more kinds of discharge tubes or discharge lamps as defined by groups H01J 11/00, H01J 13/00, H01J 15/00, H01J 17/00, H01J 21/00, H01J 25/00, H01J 27/00, H01J 31/00, H01J 33/00, H01J 35/00, H01J 37/00, H01J 40/00, H01J 41/00, H01J 43/00, H01J 45/00, H01J 47/00, H01J 49/00, H01J 61/00, H01J 63/00 or H01J 65/00, hereinafter called basic kinds, wherein plasma display panels of H01J 11/00, H01J 17/00, electron emission display panels of H01J 31/00 and flat panel electron emission lamps as LCD backlight of H01J 63/00 are considered as a single basic kind.

References

Limiting references

This place does not cover:

Details only described with reference to or clearly only applicable to discharge tubes or discharge lamps of a single basic kind	H01J 11/00, H01J 13/00, H01J 15/00, H01J 17/00, H01J 21/00, H01J 25/00, H01J 27/00, H01J 31/00, H01J 33/00, H01J 35/00, H01J 37/00, H01J 40/00, H01J 41/00, H01J 43/00, H01J 45/00, H01J 47/00, H01J 49/00, H01J 61/00, H01J 63/00, H01J 65/00

Informative references

Attention is drawn to the following places, which may be of interest for search:

Apparatus or processes specially adapted for the manufacture of details of H01J 5/00	H01J 9/00

Vessels

Soldering; welding; working by laser beamWorking by laser beam, e.g. welding, cutting, boring	B23K, B23K 26/00
Laminating glass layers	**B32C17/10**
Reforming and uniting glass sheets by fusing	C03B 23/00
Glass compositions	C03C 3/00- C03C 4/00
Fusion frit compositions	C03C 8/24
Glass ceramics	C03C 10/00
Surface treatment of glass ... by coating (e.g. with dielectric materials)	C03C 15/00- C03C 25/00, C03C 17/00
Joining glass to glass other than by fusing; Joining pieces of glass to pieces of other inorganic material	C03C 27/00
Ceramics	C04B 35/00
Coating (e.g. of metal or dielectric materials)... by vacuum evaporation, by sputtering or by ion implantation	C23C, C23C 14/00
Units comprising two or more parallel glass of like panes permanently secured together	**E06B23/00**

Connecting or feeding means

Electric coupling devices comprising a holder adapted for supporting a tube or lamp and not forming part of the tube or lamp	H01J 33/00

H01J 5/04

Vessels or containers characterised by the material thereof (selection of the material of the coating H01J 5/08)

References

Informative references

Attention is drawn to the following places, which may be of interest for search:

Selection of the material of the coating	H01J 5/08

H01J 5/08

provided with coatings on the walls therof; Selection of materials for the coatings (luminescent coatings H01J 1/62)

References

Informative references

Attention is drawn to the following places, which may be of interest for search:

Luminescent coatings	H01J 1/62

H01J 5/16

Optical or photographic arrangements structurally combined with the vessel (luminescent coatings H01J 1/62 {see provisionally H01J 29/84})

References

Informative references

Attention is drawn to the following places, which may be of interest for search:

Luminescent coatings	H01J 1/62

H01J 5/34

for an individual conductor (pinched-stem seals H01J 5/38; end-disc seals H01J 5/40; annular seals H01J 5/44)

References

Informative references

Attention is drawn to the following places, which may be of interest for search:

Pinched-stem seals	H01J 5/38
End-disc seals	H01J 5/40
Annular seals	H01J 5/44

H01J 5/48

Means forming part of the tube or lamp for the purpose of supporting it (associated with electrical connecting means H01J 5/50)

References

Informative references

Attention is drawn to the following places, which may be of interest for search:

Electrical connecting means	H01J 5/50

H01J 7/00

Details not provided for in the preceding groups and common to two or more basic types of discharge tubes or lamps

Definition statement

This place covers:

Details not provided for in the preceding groups of an unspecified kind of discharge tube or discharge lamp, or of two or more kinds of discharge tubes or discharge lamps as defined by groups H01J 11/00, H01J 13/00, H01J 15/00, H01J 17/00, H01J 21/00, H01J 25/00, H01J 27/00, H01J 31/00, H01J 33/00, H01J 35/00, H01J 37/00, H01J 40/00, H01J 41/00, H01J 43/00, H01J 45/00, H01J 47/00, H01J 49/00, H01J 61/00, H01J 63/00 or H01J 65/00, hereinafter called basic kinds, wherein plasma display panels of H01J 11/00, H01J 17/00, electron emission display panels of H01J 31/00 and flat panel electron emission lamps as LCD backlight of H01J 63/00 are considered as a single basic kind.

In particular: Selection of substances for gas fillings and specified operating pressure or temperature; means for obtaining or maintaining the desired pressure within the vessel; cooling arrangements, heating arrangements and means for circulating gas or vapour within the discharge space; ignition arrangements

References

Limiting references

This place does not cover:

Details only described with reference to or clearly only applicable to discharge tubes or discharge lamps of a single basic kind	H01J 11/00, H01J 13/00, H01J 15/00, H01J 17/00, H01J 21/00, H01J 25/00, H01J 27/00, H01J 31/00, H01J 33/00, H01J 35/00, H01J 37/00, H01J 40/00, H01J 41/00, H01J 43/00, H01J 45/00, H01J 47/00, H01J 49/00, H01J 61/00, H01J 63/00, H01J 65/00

Informative references

Attention is drawn to the following places, which may be of interest for search:

Apparatus or processes specially adapted for the manufacture of details of H01J 7/00	H01J 9/00
Control or maintenance of pressure in the vessel or discharge tubes or lamps	H01J 9/385, H01J 2209/385 - H01J 2209/3855
Getters in AC plasma display panels	H01J 11/52
Getters in DC plasma display panels	H01J 17/24
Getters in cathode ray tubes and electron beam tubes	H01J 29/94
Circuit arrangements for igniting	H02M 1/02, H05B

Synonyms and Keywords

In patent documents, the following abbreviations are often used:

NEG	non-evaporable getter

H01J 7/02

Selection of substances for gas fillings; Specified operating pressure or temperature (radioactive fillings H01J 7/40)

References

Informative references

Attention is drawn to the following places, which may be of interest for search:

Radioactive fillings	H01J 7/40

H01J 7/24

Cooling arrangements (for main electrodes H01J 1/02); Heating arrangements (for main electrodes H01J 1/02); Means for circulating gas or vapour within the discharge space

References

Informative references

Attention is drawn to the following places, which may be of interest for search:

Cooling arrangements for main electrodes	H01J 1/02
Heating arrangements for main electrodes	H01J 1/02

H01J 7/30

Igniting arrangements (circuit arrangements H02M 1/02, H05B)

References

Informative references

Attention is drawn to the following places, which may be of interest for search:

Circuit arrangements	H02M 1/02, H05B

H01J 9/00

Apparatus or processes specially adapted to the manufacture, {installation, removal, maintenance} of electric discharge tubes, discharge lamps, or parts thereof (manufacture of vessels or containers from metal B21, e.g. B21D 51/00, from glass C03B); Recovery of material from discharge tubes or lamps

Definition statement

This place covers:

Apparatus or processes specially adapted to the manufacture, of electric discharge tubes and discharge lamps of H01J, or parts thereof; Repairing or regenerating used or defective discharge tubes or discharge lamps of H01J; Recovery of material from discharge tubes or discharge lamps of H01J

References

Informative references

Attention is drawn to the following places, which may be of interest for search:

Electrodes and electron emitters

Micro-structural technology	B81B, B81C
Nano-structures and manufacture or treatment thereof	B82B
Carbon and compounds thereof; manufacture thereof CNT material and manufacture thereof	C01B 31/00, C01B 31/022
Metal coating of glasses	C03C 17/06
Multilayer metal coating of glasses	C03C 17/36
PZT (lead zirconate titanate) emitter materials and manufacture thereof	C04B 35/493
Metallurgy	C21, C22
Metal alloys	C22C
Coating (e.g. of metal or dielectric materials)	C23C
Deposition of carbon by e.g. chemical vapour deposition	C23C 16/26
Electrolytic or electrophoretic production of coatingse.g of CNT and carbon fibres on a substrate	C25D, C25D 15/00
Photolithographic production of patterned surfaces; photosensitive materials therefor	G03F 7/00

Luminescent screens

Luminescent materials or compositions	C09K 11/00
Luminescent screens for X-ray purposes	G21K 4/00

Deflecting devices

Manufacturing coils for transformers, inductances, reactors or choke coils	H01F 41/04

Vessels

Cleaning devices or components	B08B
Manufacture of vessels or containers from metal	B21, e.g. B21D 51/00
Soldering; welding; working by laser beamWorking by laser beam, e.g. welding, cutting, boring	B23K, B23K 26/00
Moulds	B29C 33/00
Layered products characterised by the relation between layers, e.g. by using adhesives Layered products essentially comprising sheet glass Layered products essentially comprising synthetic resin	B32B 7/00, B32B 7/12, B32B 17/00, B32B 27/00
Laminating glass layers	**B32C17/10**
Manufacture of vessels or containers from glass	C03B
Reforming and uniting glass sheets by fusing	C03B 23/00
Fusion frit compositions	C03C 8/24
Surface treatment of glass by coating (e.g. with dielectric materials)	C03C 15/00- C03C 25/00, C03C 17/00
Joining glass to glass other than by fusing; Joining pieces of glass to pieces of other inorganic material	C03C 27/00
Adhesives	C09J
Coating (e.g. of metal or dielectric materials) by vacuum evaporation, by sputtering or by ion implantationby chemical vapour deposition	C23C, C23C 14/00, C23C 16/00
Coatings on or surface treatment of optical elementsAntireflection coatings in general	G02B 1/10, G02B 1/11

Classification is made in H01J 9/00 and additionally in H01J 2209/00.

Special rules of classification

As to plasma display panels and electron emission display/flat panels:

- Apparatus or processes specially adapted to the manufacture of electrodes, dielectric layers or protection layers of plasma display panels are covered by H01J 9/02 (since being part of the manufacture of the electrode system).Apparatus or processes specially adapted to the manufacture of control electrodes (gate electrodes, focusing electrodes) of electron emission flat panels are covered by H01J 9/148. Apparatus or processes specially adapted to the manufacture of anode electrodes of electron emission flat panels are covered by H01J 9/148 if merely the anode electrode(s) is(are) concerned. The arrangement of luminescent material, the reflective layers or the black matrix is rather covered by H01J 9/227 and subgroups thereof. The manufacture of field emitters, like carbon nanotube emitters, is covered by H01J 9/025, the manufacture of CNT materials in general by C01B 31/022.
- Methods of assembling together the component parts of electrode systems of the display panels are covered by H01J 9/185.

Apparatus or processes specially adapted for applying optical layers / coatings or shielding layers / coatings (e.g. filter layers, electromagnetic interference shielding layers, anti-reflection coatings, anti-glare coatings) integral with or directly attached to the display panel, e.g. to the front substrate, are covered by H01J 9/205. Apparatus or processes for applying luminescent material/coatings to the screen or vessel are covered by H01J 9/227 and subgroups thereof. H01J 9/2278 covers the application of light absorbing material (black matrix), e.g. between the luminescent material.

- Apparatus or processes specially adapted to the manufacture of the vessel of the display panels are covered by H01J 9/241 (regarding faceplate (front substrate); backplate (rear substrate); frame

between the plates), H01J 9/242 (regarding spacers / barrier ribs between the faceplate and the backplate) or H01J 9/261 (regarding sealing together parts of the vessel).

- Apparatus or processes specially adapted to the manufacture of leading-in conductors are covered by H01J 9/28 and those adapted to the sealing of leading-in conductors are covered by H01J 9/32.
- Apparatus or processes specially adapted to exhausting, degassing, filling, or cleaning the vessels are covered by H01J 9/38 (or subgroups thereof), those adapted to the closing of the vessels are covered by H01J 9/40.
- Further, the subgroups H01J 9/42 (measuring or testing during manufacture), H01J 9/44, H01J 9/445 (factory adjustment), H01J 9/46, H01J 9/48 (machines having sequentially arranged operating stations), H01J 9/50, H01J 9/505 (repairing or regenerating), H01J 9/52 (recovery of material) also cover plasma display panels and electron emission display panels.

H01J 9/233

Manufacture of photo-electric screens or charge-storage screens {(no documents, see H01J 29/36)}

Special rules of classification

This group is not used, the subject matter is covered by H01J 29/36

H01J 9/236

Manufacture of magnetic deflecting devices for cathode-ray tubes (manufacturing coils for transformers, inductances, reactors or choke coils H01F 41/04)

References

Informative references

Attention is drawn to the following places, which may be of interest for search:

Manufacturing coils for transformers, inductances, reactors or choke coils	H01F 41/04

H01J 9/52

Recovery of material from discharge tubes or lamps (H01J 9/50 takes precedence)

References

Limiting references

This place does not cover:

Repairing or regenerating used or defective discharge tubes or lamps	H01J 9/50

H01J 11/00

Gas-filled discharge tubes with alternating current induction of the discharge, e.g. AC-PDPs [Alternating Current Plasma Display Panels] (circuits or methods for driving PDPs G09G 3/28); Gas-filled discharge tubes without any main electrode inside the vessel; Gas-filled discharge tubes with at least one main electrode outside the vessel (discharge lamps H01J 65/00 {H01J 61/00, H01J 63/00})

Definition statement

This place covers:

- Plasma display panels having alternating current induction of the discharge as well as gas-filled discharge tubes with at least one main electrode outside the vessel. The main electrode is out of contact with the plasma.
- Arrangements for plasma display panels such as cables, wiring, heat dissipating bodies, electromagnetic shielding arrangements that are inside the vessel, or partly inside the vessel, or directly attached to the vessel.

References

Limiting references

This place does not cover:

Methods for manufacturing AC-PDPs	H01J 9/00
Discharge lamps	H01J 61/00, H01J 63/00, H01J 65/00
Circuits or methods for driving AC-PDPs	G09G 3/28

Informative references

Attention is drawn to the following places, which may be of interest for search:

Plasma addressed liquid crystal devices [PALC]	H01J 17/485, G02F 1/13334
Direct current plasma display panels [DC-PDP]	H01J 17/49, **/00**
Cathode ray tubes [CRT]	H01J 29/00, H01J 31/00
Field emission displays [FED]	H01J 29/00, H01J 31/00
Cooling arrangements being part of the tube, e.g. an heat dissipation sheet directly attached to the vessel	H01J 2211/66
Liquid crystal displays [LCD]	G02F 1/13
Electrophoretic displays	G02F 1/167
Touch screens	G06F 3/00
Indicating arrangements for variable information in which the information is built-up on a support by selection or combination of individual elements	G09F 9/00
Displays using organic light-emitting diodes	H01L 27/32
Light emitting diodes [LED]	H01L 33/00
Organic light-emitting diodes [OLED]	H01L 51/50
Casings, cabinets or drawers for electric apparatus	H05K 5/00
Constructional details common to different types of electric apparatus	H05K 7/00

Modifications to facilitate cooling, ventilating, or heating in electrical apparatus	H05K 7/20
Electromagnetic shielding	H05K 9/00

Special rules of classification

When classifying in this main group, classification is made in any appropriate place, i.e. multi-aspect classification is used. This means that, e.g., a document relating to a dielectric layer of an AC-PDP is classified in one of **H01J10/00** - **H01J18/00** (identifying the kind of structure of the PDP) and in H01J 11/38 (relating to dielectric and insulating layers).

In this main group documents are classified according to the reformed ECLA approach, i.e. important (invention-type) information is identified with ECLA symbols, e.g. H01J 11/12, additional (secondary) information with Indexing Code symbols, e.g. H01J 2211/12.

Classification of important information and additional information is obligatory in this main group.

Glossary of terms

In this place, the following terms or expressions are used with the meaning indicated:

Main electrode	sustain electrode, address electrode or scan electrode

Synonyms and Keywords

In patent documents, the following abbreviations are often used:

AC	Alternating Current
DC	Direct Current
PDP	Plasma Display Panel
EMI	ElectroMagnetic Interference
NIR	Near InfraRed
IR	InfraRed
PALC	Plasma Addressed Liquid Crystals

H01J 11/10

AC-PDPs with at least one main electrode being out of contact with the plasma

Definition statement

This place covers:

The kind of structure of the AC plasma display panel.

H01J 11/22

Electrodes, e.g. special shape, material or configuration

References

Informative references

Attention is drawn to the following places, which may be of interest for search:

Working metallic powder	B22F 1/00
Multilayer coating of glasses with metal	C03C 17/36
Joining glass to metal	C03C 27/00
Coating on polymers	C08J 7/00
Photolitographic production of patterned surfaces; photosensitive materials	G03F 7/00
Composition of metallic electrodes	H01B 1/00

Synonyms and Keywords

In patent documents, the following words/expressions are often used as synonyms:

- "discharge electrodes", "maintenance electrodes", "scan and sustain electrodes" and "display electrodes"
- "address electrodes", "write electrodes", "column electrodes" and "data electrodes".

H01J 11/34

Vessels, containers or parts thereof, e.g. substrates

Definition statement

This place covers:

Vessels, containers or parts thereof, substrates for plasma displays, alignment marks on the substrate.

References

Informative references

Attention is drawn to the following places, which may be of interest for search:

Shaping of glass	C03B 9/00 - C03B 33/00
Glass compositions (flat glass, powders or frit, devitrified glass, fibres, etc.)	C03C 1/00 - C03C 14/00
Glass compositions	C03C 3/00
Frits	C03C 8/00
Glass ceramics	C03C 10/00
Powdered glass	C03C 12/00
Glass composition containing a non glass component	C03C 14/00
Ceramics	C04B 35/00

H01J 11/36

Spacers, barriers, ribs, partitions or the like

References

Informative references

Attention is drawn to the following places, which may be of interest for search:

Glass compositions (flat glass, powders or frit, devitrified glass, fibres, etc.)	C03C 1/00 - C03C 14/00
Glass compositions	C03C 3/00
Ceramics	C04B 35/00

Special rules of classification

Further details are covered by the subgroups of Indexing Code groups listed below. Classification is obligatory.

H01J 2211/363	Cross section of the spacers
H01J 2211/365	Pattern of the spacers
H01J 2211/368	Dummy spacers

H01J 11/38

Dielectric or insulating layers

References

Informative references

Attention is drawn to the following places, which may be of interest for search:

Layered products comprising glass	B32B 17/00
Glass compositions (flat glass, powders or frit, devitrified glass, fibres, etc.)	C03C 1/00 - C03C 14/00
Glass compositions	C03C 3/00
Glass ceramics	C03C 10/00
Surface treatment of glass (e.g. coating, etching, ion exchange, etc.)	C03C 15/00 - C03C 25/00
Ceramics	C04B 35/00
Insulating bodies characterized by the material	H01B 3/00

H01J 11/40

Layers for protecting or enhancing the electron emission, e.g. MgO layers

References

Informative references

Attention is drawn to the following places, which may be of interest for search:

Layered products comprising glass	B32B 17/00
Glass compositions (flat glass, powders or frit, devitrified glass, fibres, etc.)	C03C 1/00 - C03C 14/00
Glass compositions	C03C 3/00
Glass ceramics	C03C 10/00
Surface treatment of glass (e.g. coating, etching, ion exchange, etc.)	C03C 15/00 - C03C 25/00
Ceramics	C04B 35/00

H01J 11/42

Fluorescent layers

References

Informative references

Attention is drawn to the following places, which may be of interest for search:

Fluorescent materials per se	C09K 11/00

Special rules of classification

Regarding fluorescent materials: in order to be classified in H01J 11/42, the invention has to refer to an AC plasma display panel, wherein the phosphor is composed of a particular material.

H01J 11/44

Optical arrangements or shielding arrangements, e.g. filters, black matrices, light reflecting means or electromagnetic shielding means

Definition statement

This place covers:

Optical arrangements or shielding arrangements. Also means to improve contrast.

For example, a document regarding an arrangement to improve contrast, like adding pigments of different colours in ribs, dielectric layer and substrate, is covered by H01J 11/44. Filters for AC-PDPs are covered by H01J 11/44 if they are inside or directly attached to the vessel.

References

Informative references

Attention is drawn to the following places, which may be of interest for search:

Layered products comprising glass	B32B 17/00

Layered products comprising resin	B32B 27/00
Materials of adhesive layers	**C09J/00**
Optical elements characterized by the material	G02B 1/00
Optical elements other than lenses	G02B 5/00
Production of optical devices by litographic processes; photosensitive materials	G03F 7/00
Electromagnetic shielding	H05K 9/00

Special rules of classification

Further details are covered by the subgroups of Indexing Code groups listed below. Classification is obligatory.

H01J 2211/442	Light reflecting means; Anti-reflection means
H01J 2211/444	Means for improving contrast or colour purity, e.g. black matrix or light shielding means
H01J 2211/446	Electromagnetic shielding means; Antistatic means
H01J 2211/448	Near infrared shielding means

H01J 11/46

Connecting or feeding means, e.g. leading-in conductors

Definition statement

This place covers:

Means for giving electricity to the electrodes of the AC-PDP. Such means are classified here only if at least part of said means is inside the vessel.

References

Informative references

Attention is drawn to the following places, which may be of interest for search:

Driving circuits	G09G 3/28
Connectors	**H01R/00**
Printed circuits	H05K 1/00
Assembling printed circuits with other printed circuits	H05K 3/36
Casings, cabinets or drawers for electric apparatus	H05K 5/00
Constructional details common to different types of electric apparatus	H05K 7/00

H01J 11/48

Sealing, e.g. seals specially adapted for leading-in conductors

References

Informative references

Attention is drawn to the following places, which may be of interest for search:

Composition of fusing seals	C03C 8/24

H01J 11/54

Means for exhausting the gas

Definition statement

This place covers:

Means for exhausting the gas, e.g. vent pipes or ribs arrangements for exhausting the gas

References

Informative references

Attention is drawn to the following places, which may be of interest for search:

Methods of exhausting vessels	H01J 9/385

H01J 13/00

Discharge tubes with liquid-pool cathodes, e.g. metal-vapour rectifying tubes (lamps H01J 61/00)

Definition statement

This place covers:

Gas filled discharge tubes with liquid pool cathodes. Metal-vapour rectifier. In particular, mercury-vapour rectifier for converting high-voltage or high-current alternating current into direct current.

References

Limiting references

This place does not cover:

Discharge lamps	H01J 61/00

Informative references

Attention is drawn to the following places, which may be of interest for search:

Circuit arrangements for discharge tubes in static converters	H02M 1/02

H01J 13/16

Anodes; Auxiliary anodes for maintaining the discharge (screens H01J 13/22)

References

Informative references

Attention is drawn to the following places, which may be of interest for search:

Screens	H01J 13/22

H01J 13/20

Control electrodes, e.g. grid (for igniting arrangements H01J 13/34)

References

Informative references

Attention is drawn to the following places, which may be of interest for search:

Control electrodes for igniting arrangements	H01J 13/34

H01J 13/32

Cooling arrangements; Heating arrangements (for cathodes H01J 13/14; for anodes H01J 13/18)

References

Informative references

Attention is drawn to the following places, which may be of interest for search:

Cooling arrangements for cathodes	H01J 13/14
Cooling arrangements for anodes	H01J 13/18

H01J 13/34

Igniting arrangements (circuits arrangements H02M 1/02)

References

Informative references

Attention is drawn to the following places, which may be of interest for search:

Circuits arrangements	H02M 1/02

H01J 13/44

Devices for preventing or eliminating arcing-back (screens therefor H01J 13/22)

References

Informative references

Attention is drawn to the following places, which may be of interest for search:

Screens therefor	H01J 13/22

H01J 15/00

Gas-filled discharge tubes with gaseous cathodes, e.g. plasma cathode (lamps H01J 61/62)

References

Informative references

Attention is drawn to the following places, which may be of interest for search:

Lamps	H01J 61/62

H01J 17/00

Gas-filled discharge tubes with solid cathode (H01J 25/00, H01J 27/00, H01J 31/00 - H01J 41/00 {H01J 11/00} take precedence; gas or vapour discharge lamps H01J 61/00; gas filled spark gaps H01T; Marx converters H02M 7/26; tubes for generating potential differences by charges carried in a gas stream H02N)

Definition statement

This place covers:

Gas filled discharge tubes with solid cathode. Plasma display panels operated with direct current (DC PDPs) and their details. Plasma addressed liquid crystal displays (PALC). Thyratrons.

References

Limiting references

This place does not cover:

Gas-filled discharge tubes with alternating current induction of the discharge, e.g. AC-PDPs	H01J 11/00
Transit-time tubes, e.g. Klystrons, travelling wave tubes, magnetrons	H01J 25/00
Ion beam tubes	H01J 27/00
Cathode ray tubes and electron beam tubes, in particular electron emission (e.g. field emission) display panels	H01J 31/00
Discharge tubes for measuring pressure of introduced gas or for evacuation by diffusion of ions	H01J 41/00
Discharge lamps	H01J 61/00
Spark gaps, including gas-filled spark gaps	H01T

Marx converters	H02M 7/26
Tubes for generating potential differences by charges carried in a gas stream	H02N

Informative references

Attention is drawn to the following places, which may be of interest for search:

Plasma addressed liquid crystal devices [PALC]	H01J 17/485, G02F 1/13334
Direct current plasma display panels [DC-PDP]	H01J 17/49
Cathode ray tubes [CRT]	H01J 29/00, H01J 31/00
Field emission displays [FED]	H01J 29/00, H01J 31/00
Liquid crystal displays [LCD]	G02F 1/13
Electrophoretic displays	G02F 1/167
Touch screens	G06F 3/00
Indicating arrangements for variable information in which the information is built-up on a support by selection or combination of individual elements	G09F 9/00
Displays using organic light-emitting diodes	H01L 27/32
Light emitting diodes [LED]	H01L 33/00
Organic light-emitting diodes [OLED]	H01L 51/50

Special rules of classification

When classifying in this main group, classification is made in any appropriate place, i.e. multi-aspect classification is used. This means that, e.g., a document relating to an anode of a PALC should be classified in H01J 17/485 (relating to the PALC) and H01J 17/10 (relating to the anode).

Synonyms and Keywords

In patent documents, the following abbreviations are often used:

DC	Direct Current
PDP	Plasma Display Panel
PALC	Plasma Addressed Liquid Crystals

H01J 17/20

Selection of substances for gas fillings; Specified operating pressure or temperature (radioactive fillings H01J 17/32)

References

Informative references

Attention is drawn to the following places, which may be of interest for search:

Radioactive fillings	H01J 17/32

H01J 17/38

Cold-cathode tubes (TR boxes H01J 17/64)

References

Informative references

Attention is drawn to the following places, which may be of interest for search:

TR boxes	H01J 17/64

H01J 17/40

with one cathode and one anode, e.g. glow tube, tuning-indicator glow tube, voltage-stabiliser tube, voltage-indicator tube, (cathode-glow lamps H01J 61/04)

References

Limiting references

This place does not cover:

Cathode-glow lamps	H01J 61/04

H01J 17/49

Display panels, e.g. with crossed electrodes {, e.g. making use of direct current} (gas discharge type indicating arrangements effected by the combination of a number of individual lamps G09F 9/313 {display panels making use of alternating current H01J 11/00})

References

Limiting references

This place does not cover:

Display panels making use of alternating current	H01J 11/00
Gas discharge type indicating arrangements effected by the combination of a number of individual lamps	G09F 9/313

H01J 17/50

Thermionic-cathode tubes (TR boxes H01J 17/64)

References

Informative references

Attention is drawn to the following places, which may be of interest for search:

TR boxes	H01J 17/64

H01J 19/00

Details of vacuum tubes of the types covered by group H01J 21/00

Definition statement

This place covers:

Details of tubes in which the electron stream is not altered in other ways than on/off.

H01J 19/16

Heaters (filaments for incandescent lamps H01K 1/02)

References

Informative references

Attention is drawn to the following places, which may be of interest for search:

Filaments for incandescent lamps	H01K 1/02

H01J 19/40

Screens for shielding (screens acting as control electrodes H01J 19/38)

References

Informative references

Attention is drawn to the following places, which may be of interest for search:

Screens acting as control electrodes	H01J 19/38

H01J 19/44

Insulation between electrodes or supports within the vacuum space (leading-in conductors H01J 19/62)

References

Informative references

Attention is drawn to the following places, which may be of interest for search:

Leading-in conductors	H01J 19/62

H01J 19/48

Mountings for individual electrodes (for directly-heated cathodes H01J 19/12)

References

Informative references

Attention is drawn to the following places, which may be of interest for search:

Mountings for directly-heated cathodes	H01J 19/12

H01J 19/64

Means forming part of the tube for the purpose supporting it (associated with electrical connecting means H01J 19/66)

References

Informative references

Attention is drawn to the following places, which may be of interest for search:

Means associated with electrical connecting means	H01J 19/66

H01J 19/66

Means forming part of the tube for the purpose of providing electrical connection to it (construction of connectors H01R {no documents, see H01J 5/46 - H01J 5/62})

References

Informative references

Attention is drawn to the following places, which may be of interest for search:

Construction of connectors	H01R

Special rules of classification

This group is not used for classification, the subjet matter is covered by H01J 5/46 - H01J 5/62.

H01J 19/74

Cooling arrangements (cooling of anodes H01J 19/36)

References

Informative references

Attention is drawn to the following places, which may be of interest for search:

Cooling of anodes	H01J 19/36

H01J 21/00

Vacuum tubes (H01J 25/00, H01J 31/00 - H01J 37/00, H01J 43/00 take precedence; details of vacuum tubes H01J 19/00; cathode ray or electron stream lamps H01J 63/00)

Definition statement

This place covers:

Tubes in which the electron stream is not altered in other ways than on/off.

References

Limiting references

This place does not cover:

Transit-time tubes, e.g. Klystrons, travelling-wave tubes, magnetrons	H01J 25/00
Cathode ray tubes; Electron beam tubes	H01J 31/00
Discharge tubes with provision for emergence of electrons or ions from the vessel	H01J 33/00
X-ray tubes	H01J 35/00
Discharge tubes with provision for introducing objects or material to be exposed to the discharge, e.g. for the purpose of examination or processing thereof	H01J 37/00
Secondary-emission tubes; Electron-multiplier tubes	H01J 43/00
Cathode-ray or electron-stream lamps	H01J 63/00

Informative references

Attention is drawn to the following places, which may be of interest for search:

Details of vacuum tubes	H01J 19/00

H01J 21/20

Tubes with more than one discharge path; Multiple tubes, e.g. double diode, triode-hexode (secondary-emission tubes, electron-multiplier tubes H01J 43/00)

References

Informative references

Attention is drawn to the following places, which may be of interest for search:

Secondary-emission tubes, electron-multiplier tubes	H01J 43/00

H01J 21/34

Tubes with electrode system arranged or dimensioned so as to eliminate transit-time effect (with flat electrodes H01J 21/36)

References

Limiting references

This place does not cover:

Flat electrodes	H01J 21/36

H01J 23/00

Details of transit-time tubes of the types covered by group H01J 25/00

Definition statement

This place covers:

Details of tubes in which the electron stream is altered in other ways than on/off.

Synonyms and Keywords

In patent documents, the following abbreviations are often used:

TWT	traveling wave tube
TWTA	traveling wave tube amplifier
Vircator	virtual cathode oscillator

H01J 23/02

Electrodes; Magnetic control means; Screens (associated with resonator or delay system H01J 23/16)

References

Limiting references

This place does not cover:

Means associated with resonator or delay system	H01J 23/16

H01J 23/065

producing a solid cylindrical beam (H01J 23/075 takes precedence)

References

Limiting references

This place does not cover:

Magnetron injection guns	H01J 23/075

H01J 23/07

producing a hollow cylindrical beam (H01J 23/075 takes precedence)

References

Limiting references

This place does not cover:

Magnetron injection guns	H01J 23/075

H01J 23/09

Electric system for directing or deflecting the discharge along a desired path, e.g. E-type (focusing arrangements H01J 23/08)

References

Limiting references

This place does not cover:

Focusing arrangements	H01J 23/08

H01J 23/10

Magnet systems for directing or deflecting the discharge along a desired path, e.g. a spiral path (magnetic focusing arrangements H01J 23/08)

References

Limiting references

This place does not cover:

Magnetic focusing arrangements	H01J 23/08

H01J 23/11

Means for reducing noise (in electron or ion gun H01J 23/06)

References

Limiting references

This place does not cover:

Means for reducing noise in electron or ion gun	H01J 23/06

H01J 23/42

the interaction circuit being a helix or a helix-derived slow-wave structure (H01J 23/44 - H01J 23/48 take precedence)

References

Limiting references

This place does not cover:

Rod-type coupling devices	H01J 23/44
Loop coupling devices	H01J 23/46
Devices for linking interaction circuit with coaxial lines; Devices of the coupled helices type	H01J 23/48

H01J 23/44

Rod-type coupling devices (H01J 23/46, H01J 23/48, H01J 23/54 take precedence)

References

Limiting references

This place does not cover:

Loop coupling devices	H01J 23/46
Devices for linking interaction circuit with coaxial lines; Devices of the coupled helices type	H01J 23/48
Filtering devices preventing unwanted frequencies or modes to be coupled to, or out of, the interaction circuit; Prevention of high frequency leakage in the environment	H01J 23/54

H01J 23/48

for linking interaction circuit with coaxial lines; Devices of the coupled helices type (H01J 23/46 takes precedence)

References

Limiting references

This place does not cover:

Loop coupling devices	H01J 23/46

H01J 23/50

the interaction circuit being a helix or derived from a helix (H01J 23/52 takes precedence)

References

Limiting references

This place does not cover:

Coupled helices being disposed coaxially around one another	H01J 23/52

H01J 25/00

Transit-time tubes, e.g. Klystrons, travelling-wave tubes, magnetrons (details of transit-time tubes H01J 23/00; particle accelerators H05H)

Definition statement

This place covers:

Tubes in which the electron stream is altered in other ways than on/off.

Details of transit-time tubes	H01J 23/00

Particle accelerators	H05H
Tubes in which the electron stream is only switched on/off	H01J 21/00

References

Informative references

Attention is drawn to the following places, which may be of interest for search:

Common microwave oven magnetrons	H01J 25/587

Synonyms and Keywords

In patent documents, the following abbreviations are often used:

TWT	traveling wave tube
TWTA	traveling wave tube amplifier
Vircator	virtual cathode oscillator

H01J 25/02

Tubes with electron stream modulated in velocity or density in a modulator zone and thereafter giving up energy in an inducing zone, the zones being associated with one or more resonators (tubes in which a travelling-wave is simulated at spaced gaps H01J 25/34)

References

Informative references

Attention is drawn to the following places, which may be of interest for search:

Tubes in which a travelling-wave is simulated at spaced gaps	H01J 25/34

H01J 25/42

Tubes in which an electron stream interacts with a wave travelling along a delay line or equivalent sequence of impedance elements, and with a magnet system producing an H-field crossing the E-field (with travelling wave moving completely around the electron space H01J 25/50)

References

Informative references

Attention is drawn to the following places, which may be of interest for search:

Tubes with travelling wave moving completely around the electron space	H01J 25/50

H01J 25/50

Magnetrons, i.e. tubes with a magnet system producing an H-field crossing the E-field (with travelling wave not moving completely around the electron space H01J 25/42; functioning with plural reflection or with reversed cyclotron action H01J 25/62, H01J 25/64)

References

Informative references

Attention is drawn to the following places, which may be of interest for search:

Magnetrons with travelling wave not moving completely around the electron space	H01J 25/42
Functioning with plural reflection or with reversed cyclotron action	H01J 25/62, H01J 25/64

H01J 25/54

having only one cavity or other resonator, e.g. neutrode tube (having a composite resonator H01J 25/58)

References

Informative references

Attention is drawn to the following places, which may be of interest for search:

Composite resonator	H01J 25/58

H01J 25/68

Tubes specially designed to act as oscillator with positive grid and retarding field, e.g. for Barkhausen-Kurz oscillators (with secondary emission H01J 25/76)

References

Informative references

Attention is drawn to the following places, which may be of interest for search:

Tubes with secondary emission	H01J 25/76

H01J 25/72

in which a standing wave or a considerable part thereof is produced along an electrode, e.g. Clavier tube (with resonator having distributed inductance and capacitance H01J 25/70)

References

Informative references

Attention is drawn to the following places, which may be of interest for search:

Tubes with resonator having distributed inductance and capacitance	H01J 25/70

H01J 25/74

Tubes specially designed to act as transit-time diode oscillators, e.g. monotron (with secondary emission H01J 25/76)

References

Informative references

Attention is drawn to the following places, which may be of interest for search:

Tubes with secondary emission	H01J 25/76

H01J 27/00

Ion beam tubes (H01J 25/00, H01J 33/00, H01J 37/00 take precedence; particle accelerators H05H)

Definition statement

This place covers:

Electric discharge tubes generating a beam of ions

References

Limiting references

This place does not cover:

Ion guns common to two or more basic types of discharges	H01J 3/04
Transit-time tubes, e.g. Klystrons, travelling-wave tubes, magnetrons	H01J 25/00
Discharge tubes with provision for emergence of electrons or ions from the vessel	H01J 33/00
Discharge tubes with provision for introducing objects or material to be exposed to the discharge, e.g. for the purpose of examination or processing thereof	H01J 37/00
Devices providing for corona discharge	H01T 19/00
Apparatus for generating ions to be introduced into non-enclosed gases, e.g. into the atmosphere	H01T 23/00
Particle accelerators	H05H
Generating plasma	H05H 1/24

Application-oriented references

Examples of places where the subject matter of this place is covered when specially adapted, used for a particular purpose, or incorporated in a larger system:

Ion sources for discharge tubes with provision for introducing objects or material to be exposed to the discharge, e.g. for ion implanters or ion microscopes	H01J 37/08
Ion sources for particle spectrometers	H01J 49/10
Ion thrusters	F03H 1/00

Informative references

Attention is drawn to the following places, which may be of interest for search:

Arrangements for handling radiation or particles, e.g. focusing, moderating	G21K 1/00

H01J 27/02

Ion sources; Ion guns ({for examination or processing discharge tubes H01J 37/08; ion sources, ion guns for particle spectrometer or separator tubes H01J 49/10; ion propulsion F03H 1/00}; arrangements for handling particles, e.g. focusing, {charge exchanging, polarising} , G21K 1/00; generating ions to be introduced into non-enclosed gases H01T 23/00; generating plasma H05H 1/24)

References

Limiting references

This place does not cover:

Ion guns for examination or processing discharge tubes	H01J 37/08
Ion sources, ion guns for particle spectrometer or separator tubes	H01J 49/10

Informative references

Attention is drawn to the following places, which may be of interest for search:

Ion propulsion	F03H 1/00
Arrangements forhandling particles, e.g. focusing charge exchanging, polarising	G21K 1/00
Generating ions to be introduced into non-enclosed gases	H01T 23/00
Generating plasma	H05H 1/24

H01J 27/04

using reflex discharge, e.g. Penning ion sources {(Electron bombardment ion sources H01J 27/08)}

References

Limiting references

This place does not cover:

Electron bombardment ion sources	H01J 27/08

H01J 27/26

using surface ionisation, e.g. field effect ion sources, thermionic ion sources (H01J 27/20, H01J 27/24 take precedence)

References

Limiting references

This place does not cover:

Particle beam bombardment, e.g. ionisers	H01J 27/20
Photo-ionisation, e.g. using laser beam	H01J 27/24

H01J 29/00

Details of cathode-ray tubes or of electron-beam tubes of the types covered by group H01J 31/00

Definition statement

This place covers:

Details of cathode ray tubes or of electron beam tubes of the types covered by group H01J 31/00, as far as the details are an integral component of (structurally combined with) the tubes.

In particular: Electrodes; Screens (e.g. luminescent screens); Electron-optical arrangements (e.g. control electrodes, electron guns, focusing and deflection arrangements); Vessels; Optical or photographic arrangements structurally combined with the vessel; Leading-in arrangements; Seals; Means forming part of the tube for the purpose of providing electrical connection to it; Means for obtaining or maintaining the desired pressure within the tube; Selection of substances for gas fillings; Circuit elements structurally associated with the tube

Further information:

Generally only the following ECLA subgroups of H01J 29/00 cover electron emission display panels (e.g. field emission display panels):

H01J 29/006 (cooling means); H01J 29/02 (electrodes); H01J 29/04 (cathodes); H01J 29/085 (anode plates, in particular anode electrode(s)); H01J 29/20, H01J 29/22, H01J 29/28, H01J 29/30-H01J 29/327 (luminescent screens, including reflective layers and black matrix associated therewith); H01J 29/467, H01J 29/481 (control electrodes / control electrode structures, (gate electrodes; focusing electrodes; insulating layers between the cathode electrodes and the gate electrodes or between the gate electrodes and the focusing electrodes)); H01J 29/86, H01J 29/862, H01J 29/863, H01J 29/864, H01J 29/868, H01J 29/88, H01J 29/89, H01J 29/896, H01J 29/898 (vessels; including faceplate (front substrate), backplate (rear substrate), frame between the plates, spacers / barrier ribs between the faceplate and the backplate; sealings of the vessel; optical arrangements or shielding arrangements (e.g. filters) integral with or directly attached to the display panel, e.g. to the front substrate); H01J 29/90 (leading in arrangements; seals therefor); H01J 29/92, H01J 29/925 (means forming part of the display panel for the purpose of providing electrical connection to it, e.g. terminal arrangements); H01J 29/94 (means for exhausting the vessel or maintaining vacuum within the vessel); H01J 29/96 (circuit arrangements structurally associated with the display panels, e.g. resistive / capacitive circuit elements to adapt/control the applied electric potentials)

References

Limiting references

This place does not cover:

Stands or trestles as supports for display apparatus	F16M 11/00
Control circuits for electron emission display panels or methods of driving thereof	G09G 3/22
Electrical connectors not integral with the display panel	H01R
Control circuits for cathode ray tubes or methods of driving thereof	H04N 3/00, H04N 5/00
Printed circuit boards for electron emission display apparatus; arrangement and connection thereof (e.g. to the electrodes of the display panel) when not integral with the display panel	H05K 1/00- H05K 3/00
Casings or cabinets of display apparatus not integral with the display panelSupporting structures in these casings or cabinets for circuit boards not integral with the display panel	H05K 5/00, H05K 7/14
Cooling or ventilating arrangements of display apparatus, when not integral with the display panel	H05K 7/20954
EMI shielding filters of display panels when not integral with or directly attached to the display panel	H05K 9/0096

Informative references

Attention is drawn to the following places, which may be of interest for search:

Apparatus or processes specially adapted for the manufacture of details of H01J 29/00	H01J 9/00

Electrodes

Micro-structural devices or systems and manufacture thereof	B81B, B81C
Nano-structures and manufacture thereof	B82B
Nanotechnology	B82Y
Carbon and compounds thereof; manufacture thereof CNT material and manufacture thereof	C01B 31/00, C01B 31/022
Metal coating of glasses	C03C 17/06
Multilayer metal coating of glasses	C03C 17/36
PZT (lead zirconate titanate) emitter materials and manufacture thereof	C04B 35/491
Metallurgy	C21, C22
Metal alloys	C22C
Coating (e.g. of metal or dielectric materials)	C23C
Deposition of carbon by e.g. chemical vapour deposition	C23C 16/26
Electrolytic or electrophoretic production of coatingse.g of CNT and carbon fibres on a substrate	C25D, C25D 15/00
Secondary-emission detectors for measurement of nuclear or X-radiation	G01T 1/28
Photolithographic production of patterned surfaces; photosensitive materials therefor	G03F 7/00

Conductors or conductive bodies characterised by the conductive materials; Selection of materials as conductors	H01B 1/00
Filaments for incandescent lamps	H01K 1/02

Luminescent screens

Luminescent materials or compositions	C09K 11/00
Luminescent screens for X-ray purposes	G21K 4/00

Vessels

Soldering; welding; working by laser beamWorking by laser beam, e.g. welding, cutting, boring	B23K, B23K 26/00
Layered products characterised by the relation between layers, e.g. by using adhesives Layered products essentially comprising sheet glass Layered products essentially comprising synthetic resin	B32B 7/00, B32B 7/12, B32B 17/00, B32B 27/00
Laminating glass layers	**B32C17/10**
Reforming and uniting glass sheets by fusing	C03B 23/00
Glass compositions	C03C 3/00- C03C 4/00
Fusion frit compositions	C03C 8/24
Glass ceramics	C03C 10/00
Surface treatment of glass by coating (e.g. with dielectric materials)	C03C 15/00- C03C 25/00, C03C 17/00
Joining glass to glass other than by fusing; Joining pieces of glass to pieces of other inorganic material	C03C 27/00
Ceramics	C04B 35/00
Adhesives	C09J
Coating (e.g. of metal or dielectric materials) by vacuum evaporation, by sputtering or by ion implantationby chemical vapour deposition	C23C, C23C 14/00, C23C 16/00
Units comprising two or more parallel glass of like panes permanently secured together	**E06B23/00**
Stands or trestles as supports for display apparatus	F16M 11/00
Optical elements characterised by the materialother than lenses	G02B, G02B 1/00, G02B 5/00
Coatings on or surface treatment of optical elementsAntireflection coatings in general	G02B 1/10, G02B 1/11
Optical filters in general	G02B 5/20
Touch screens	G06F 3/00
Casings or cabinets of display apparatus not integral with the display panelSupporting structures in these casings or cabinets for circuit boards not integral with the display panel	H05K 5/00, H05K 7/14
Screening against electric or magnetic fields	H05K 9/00
EMI shielding filters of display panels when not integral with or directly attached to the display panel	H05K 9/0096

Connecting or feeding means; control circuits / driving methods

Control circuits for electron emission displays or methods of driving thereof	G09G 3/22
Electrical connecting elements (e.g. connection terminals) for connection of / to printed circuits (e.g. printed circuit boards)	H01R 12/00
Control circuits for cathode ray tubes or methods of driving thereof	H04N 3/00, H04N 5/00
Printed circuits / circuit boards (e.g. for display apparatus); arrangement and connection thereof Printed elements for providing electric connections to or between printed circuits Structural association of two or more printed circuits Printed circuits structurally associated with non-printed electric components Apparatus or processes for manufacturing of printed circuitsAssembling printed circuits with other printed circuits	H05K 1/00, H05K 1/11, H05K 1/14, H05K 1/18, H05K 3/00, H05K 3/36

Cooling

Cooling or ventilating arrangements of display apparatus, when not integral with the display panel	H05K 7/20954

Special rules of classification

- Classification of the type of tube in H01J 31/00 and of the relevant details in H01J 29/00 is obligatory.
- The Indexing Codes H01J 2329/00 are numbered in correspondence to subgroups of H01J 29/00, but in much more detail.
- Groups H01J 29/48 - H01J 29/51 take precedence over groups H01J 29/52-H01J 29/68.
- Details of electron emission display panels (e.g. field emission display panels) are classified obligatory in both H01J 29/00 and H01J 2329/00, even for details for which H01J 2329/00 does not provide a more detailed relevant subgroup than H01J 29/00.
- Details of other tubes of H01J 31/00, in particular of classical cathode ray tubes, are classified in H01J 29/00 and - in case of a more detailed relevant Indexing Code subgroup - also in H01J 2229/00.
- Details of cathode-ray or electron stream lamps, in particular of flat panel electron emission lamps as LCD backlight, are classified in H01J 63/00.
- If an electron emission display panel and a flat panel electron emission lamp as LCD backlight is disclosed, classification in H01J 29/00, H01J 2329/00, H01J 31/127 and H01J 63/00 is provided.
- When details are disclosed for different types of flat panel displays (e.g. plasma display panels, electron emission display panels, LCD display panels, OLED display panels), classification is provided for each type thereof.

Synonyms and Keywords

In patent documents, the following abbreviations are often used:

FED	Field emission display / device
CRT	Cathode ray tube
EMI (shielding)	Electromagnetic interference (shielding)
NIR (shielding)	Near infrared (shielding)
AR (film)	Antireflection (film)

H01J 29/04

Cathodes (electron guns H01J 29/48)

References

Informative references

Attention is drawn to the following places, which may be of interest for search:

Electron guns	H01J 29/48

H01J 29/08

Electrodes intimately associated with a screen on or from which an image or pattern is formed, picked up, converted, or stored, e.g. backing-plate for storage tube, for collecting secondary electrons (arrangements for colour switching H01J 29/80)

References

Informative references

Attention is drawn to the following places, which may be of interest for search:

Arrangements for colour switching	H01J 29/80

H01J 29/20

characterised by the luminescent material {(for luminescent screens for X-ray purposes G21K 4/00)}

References

Informative references

Attention is drawn to the following places, which may be of interest for search:

Luminescent screens for X-ray purposes	G21K 4/00

H01J 29/38

not using charge storage, e.g. photo-emissive screen, extended cathode {(electrodes using photo-emission in general H01J 1/34)}

References

Informative references

Attention is drawn to the following places, which may be of interest for search:

Electrodes using photo-emission in general	H01J 1/34

H01J 29/39

Charge-storage screens {(H01J 29/395 takes precedence)}

References

Limiting references

This place does not cover:

Charge-storage grids exhibiting triode effect	H01J 29/395

H01J 29/41

using secondary emission, e.g. for supericonoscope {(electrodes using secondary emission in general H01J 1/32; secondary emission tubes H01J 43/00)}

References

Informative references

Attention is drawn to the following places, which may be of interest for search:

Electrodes using secondary emission in general	H01J 1/32
Secondary emission tubes	H01J 43/00

H01J 29/44

exhibiting internal electric effects caused by particle radiation, e.g. bombardment-induced conductivity {(particle detectors exhibiting internal electric effects G01T 1/26)}

References

Informative references

Attention is drawn to the following places, which may be of interest for search:

Article detectors exhibiting internal electric effects	G01T 1/26

H01J 29/45

exhibiting internal electric effects caused by electromagnetic radiation, e.g. photo-conductive screen, photo-dielectric screen, photovoltaic screen {(photoconductive layers for electrography G03G 5/00)}

References

Informative references

Attention is drawn to the following places, which may be of interest for search:

Photoconductive layers for electrography	G03G 5/00

H01J 29/46

Arrangements of electrodes and associated parts for generating or controlling the ray or beam, e.g. electron-optical arrangement {(transit time tubes H01J 23/00, H01J 25/00; X-ray tubes H01J 35/00; beam tubes for examining ions, e.g. electron or ion microscopes, or processing of objects or materials, e.g. electron or ion beam tubes H01J 37/04; electron multipliers H01J 43/04; handling of radiation or particles, e.g. focusing, deviating, not otherwise provided for G21K 1/00)}

References

Informative references

Attention is drawn to the following places, which may be of interest for search:

Transit time tubes	H01J 23/00, H01J 25/00
X-ray tubes	H01J 35/00
Beam tubes for examining ions, e.g. electron or ion microscopes, or processing of objects or materials e.g. electron or ion beam tubes	H01J 37/04
Electron multipliers	H01J 43/04
Handling of radiation or particles, e.g. focusing, deviating, not otherwise provided for	G21K 1/00

H01J 29/50

Two or more guns in a single vacuum space, e.g. for plural-ray tube (H01J 29/51 takes precedence)

References

Limiting references

This place does not cover:

Arrangements for controlling convergence of a plurality of beams by means of electric field	H01J 29/51

H01J 29/52

Arrangements for controlling intensity of ray or beam, e.g. for modulation {(H01J 29/467 takes precedence)}

References

Limiting references

This place does not cover:

Control electrodes for flat display tubes,	H01J 29/467

H01J 29/54

Arrangements for centring ray or beam {(H01J 29/467 takes precedence)}

References

Limiting references

This place does not cover:

Control electrodes for flat display tubes,	H01J 29/467

H01J 29/56

Arrangements for controlling cross-section of ray or beam; Arrangements for correcting aberration of beam, e.g. due to lenses {(H01J 29/467 takes precedence)}

References

Limiting references

This place does not cover:

Control electrodes for flat display tubes,	H01J 29/467

H01J 29/58

Arrangements for focusing or reflecting ray or beam {(H01J 29/467, H01J 29/585 take precedence)}

References

Limiting references

This place does not cover:

Control electrodes for flat display tubes,	H01J 29/467
Arrangements for focusing or reflecting ray or beam in which the transit time of the electrons has to be taken into account	H01J 29/585

H01J 29/70

Arrangements for deflecting ray or beam ({H01J 29/467, H01J 29/525, H01J 29/701, H01J 29/708 take precedence } ; circuit arrangements for producing saw-tooth pulses or other deflecting voltages or currents H03K)

References

Limiting references

This place does not cover:

Control electrodes for flat display tubes,	H01J 29/467
Digitally controlled systems, e.g. Digisplay	H01J 29/525

Systems for correcting deviation or convergence of a plurality of beams by means of magnetic fields at least	H01J 29/701
Arrangements in which the transit time of the electrons has to be taken into account	H01J 29/708

Informative references

Attention is drawn to the following places, which may be of interest for search:

Circuit arrangements for producing saw-tooth pulses or other deflecting voltages or currents	H03K

H01J 29/80

Arrangements for controlling the ray or beam after passing the main deflection system, e.g. for post-acceleration or post-concentration, for colour switching {(H01J 29/701 takes precedence)}

References

Limiting references

This place does not cover:

Systems for correcting deviation or convergence of a plurality of beams by means of magnetic fields at least	H01J 29/701

H01J 29/81

using shadow masks (shadow masks per se H01J 29/07)

References

Informative references

Attention is drawn to the following places, which may be of interest for search:

Shadow masks per se	H01J 29/07

H01J 29/84

Traps for removing or diverting unwanted particles, e.g. negative ions, fringing electrons; Arrangements for velocity or mass selection (particle spectrometer or separator tubes H01J 49/00)

References

Limiting references

This place does not cover:

Particle spectrometer or separator tubes	H01J 49/00

H01J 29/88

provided with coatings on the walls thereof; Selection of materials for the coatings ({H01J 29/868 and H01J 29/89 take precedence } ; luminescent screens H01J 29/18)

References

Limiting references

This place does not cover:

Luminescent screens	H01J 29/18
Screens covering the input or output face of the vessel, e.g. transparent anti-static coatings, X-ray absorbing layers	H01J 29/868
Optical or photographic arrangements structurally combined or co-operating with the vessel	H01J 29/89

H01J 29/89

Optical or photographic arrangements structurally combined {or co-operating} with the vessel {(H01J 29/866 and H01J 29/868 take precedence)}

References

Limiting references

This place does not cover:

Devices for introducing a recording support into the vessel	H01J 29/866
Screens covering the input or output face of the vessel, e.g. transparent anti-static coatings, X-ray absorbing layers	H01J 29/868

H01J 29/94

Selection of substances for gas fillings; Means for obtaining or maintaining the desired pressure within the tube, e.g. by gettering {(exhausting, degassing, gettering of electric discharge tubes in general H01J 9/38)}

References

Informative references

Attention is drawn to the following places, which may be of interest for search:

Exhausting, degassing, gettering of electric discharge tubes in general	H01J 9/38

H01J 31/00

Cathode ray tubes; Electron beam tubes (H01J 25/00, H01J 35/00, H01J 37/00 take precedence; cathode ray or electron stream lamps H01J 63/00; details of cathode ray tubes or of electron beam tubes H01J 29/00)

Definition statement

This place covers:

Cathode ray tubes and electron beam tubes, as far as the tubes per se are concerned.

In particular: Electron emission display panels of the field emission type (field emission display panels, FED), semiconductor type, metal-insulator-metal (MIM) type or thin film type (surface conduction emission type); classical cathode ray tubes for TV and monitor use; pick up tubes (input of electromagnetic radiation, e.g. visible light, and electric output); image-conversion and image-amplification tubes

Further information:

Cathode-ray or electron stream lamps, in particular flat panel electron emission lamps as LCD backlight, are covered by H01J 63/00.

References

Limiting references

This place does not cover:

Tubes of H01J 25/00, H01J 33/00 - H01J 49/00	H01J 25/00, H01J 33/00-H01J 49/00
Details of tubes of H01J 31/00	H01J 29/00
Cathode-ray or electron stream lamps, in particular flat panel electron emission lamps as LCD backlight	H01J 63/00
Particle accelerators	H05H 3/00- H05H 15/00

Informative references

Attention is drawn to the following places, which may be of interest for search:

Apparatuses or processes specially adapted for the manufacture of tubes of H01J 31/00	H01J 9/00

Other types of displays

Alternating current plasma display panels (AC-PDP)	H01J 11/00
Plasma addressed liquid crystal devices (PALC)	H01J 17/485, G02F 1/13334
Direct current plasma display panels (DC-PDP)	H01J 17/49
Liquid crystal displays (LCD)	G02F 1/13
Electrophoretic displays	G02F 1/167
LED displays	G09F 9/33, H01L 25/0753
Displays using organic light-emitting diodes (OLED)	H01L 27/32
Organic light-emitting diodes (OLED) per se	H01L 51/50

General aspects regarding displays/displaying

Touch screens	G06F 3/00
Displaying; advertising; signsIndicating arrangements for variable information in which the information is built-up on a support by selection or combination of individual elements	G09F, G09F 9/00

Lamps, e.g. flat panel lamps

Discharge lamps	H01J 61/00- H01J 65/00
Cathode-ray or electron stream lamps, in particular flat panel electron emission lamps as LCD backlight	H01J 63/00
Light sources using semiconductor devices as light-generating elements, e.g. using light-emitting diodes [LED] or lasers	F21K 9/00
Light emitting diodes (LED) per se	H01L 33/00
Electroluminescent light sources	H05B 33/00
Electric lamps using a combination of different types of light generation	H05B 35/00

Others

Telescopes, viewfinders, optical aiming devices with means for image conversion or intensification, e.g. night vision systems	G02B 23/12
Conversion screens for the conversion of the spatial distribution of X-rays or particle radiation into visible images	G21K 4/00
Solid state imager structures, e.g. CCD imagers	H01L 27/146

Special rules of classification

- Classification of the type of tube in H01J 31/00 and of the relevant details in H01J 29/00 is obligatory.
- Most electron emission display panels, comprising matrix-arrayed electron emission sources and pixels / pixel groups, are classified in H01J 31/127. If the arrangement of the electron emission sources and of the pixels / pixel groups is not indicated, e.g. in case of a front filter of a general electron emission display panel (with the filter being integral with the front substrate of the panel), H01J 31/123 is provided.
- Indexing Code symbols H01J 2231/00 are assigned, in addition to ECLA classification symbols H01J 31/00, in case of a more detailed relevant Indexing Code subgroup, with the exception of electron emission display panels.

Synonyms and Keywords

In patent documents, the following abbreviations are often used:

FED	field emission display / device
CRT	cathode ray tube

H01J 31/02

having one or more output electrodes which may be impacted selectively by the ray or beam, and onto, from, or over which the ray or beam may be deflected or de-focused {(pulse counting circuits therewith H03K 29/06)}

References

Informative references

Attention is drawn to the following places, which may be of interest for search:

Pulse counting circuits therewith	H03K 29/06

H01J 31/14

Magic-eye or analogous tuning indicators {(mounting of visual indicators in a radio set H03J 1/04; circuits for timing indicators H03J 3/14)}

References

Informative references

Attention is drawn to the following places, which may be of interest for search:

Mounting of visual indicators in a radio set	H03J 1/04
Circuits for timing indicators	H03J 3/14

H01J 31/15

with ray or beam selectively directed to luminescent anode segments {(printing by application of radiation B41J 2/447)}

References

Informative references

Attention is drawn to the following places, which may be of interest for search:

Printing by application of radiation	B41J 2/447

H01J 31/16

with mask carrying a number of selectively displayable signs, e.g. charactron, numeroscope {(tubes with a mask carrying a matrix of openings, a selection of which permits a sign to be displayed H01J 31/128)}

References

Informative references

Attention is drawn to the following places, which may be of interest for search:

Tubes with a mask carrying a matrix of openings, a selection of which permits a sign to be displayed	H01J 31/125

H01J 31/18

with image written by a ray or beam on a grid-like charge-accumulating screen, and with a ray or beam passing through and influenced by this screen before striking the luminescent screen, e.g. direct-view storage tube {(charge storage grids exhibiting triode effect H01J 29/395)}

References

Informative references

Attention is drawn to the following places, which may be of interest for search:

Charge storage grids exhibiting triode effect	H01J 29/395

H01J 31/20

for displaying images or patterns in two or more colours {(circuits for colour television H04N 9/16 - H04N 9/28)}

References

Informative references

Attention is drawn to the following places, which may be of interest for search:

Circuits for colour television	H04N 9/16 - H04N 9/28

H01J 31/24

with screen acting as light valve by shutter operation, e.g. eidophor {(projection arrangements for image reproduction, e.g. using eidophor H04N 5/74)}

References

Informative references

Attention is drawn to the following places, which may be of interest for search:

Projection arrangements for image reproduction, e.g. using eidophor	H04N 5/74

H01J 31/26

Image pick-up tubes having an input of visible light and electric output (tubes without defined electron beams and having a light ray scanning photo-emissive screen H01J 40/20)

References

Informative references

Attention is drawn to the following places, which may be of interest for search:

Tubes without defined electron beams and having a light ray scanning photo-emissive screen	H01J 40/20

H01J 31/28

with electron ray scanning the image screen {(H01J 31/283, H01J 31/286 take precedence)}

References

Limiting references

This place does not cover:

Image pick-up tubes having with electron ray scanning the image screen	H01J 31/28
Image pick-up tubes having with electron ray scanning the image screen with a target comprising semiconductor junctions	H01J 31/283

H01J 31/46

Tubes in which electrical output represents both intensity and colour of image {(colour television cameras with only one tube H04N 9/07)}

References

Informative references

Attention is drawn to the following places, which may be of interest for search:

Colour television cameras with only one tube	H04N 9/07

H01J 31/58

Tubes for storage of image or information pattern or for conversion of definition of television or like image, i.e. having electrical input and electrical output {(electrostatic memories using electron beam tubes G11C 11/23)}

References

Informative references

Attention is drawn to the following places, which may be of interest for search:

Electrostatic memories using electron beam tubes	G11C 11/23

H01J 31/60

having means for deflecting, either selectively or sequentially, an electron ray on to separate surface elements of the screen (by circuitry alone H01J 29/08)

References

Limiting references

This place does not cover:

Deflecting an electron ray on to separate surface elements of the screen by circuitry alone	H01J 29/08

H01J 33/00

Discharge tubes with provision for emergence of electrons or ions from the vessel ({irradiation devices G21K} ; particle accelerators H05H); Lenard tubes

Definition statement

This place covers:

Discharge tubes with provision for emergence of electrons or ions from the vessel and Lenard tubes, as far as the tubes per se are concerned; and details thereof, as far as the details are an integral component of the tubes.

In particular: Electron beam permeable/transparent windows

References

Limiting references

This place does not cover:

Irradiation devices	G21K 5/00
Particle accelerators	H05H 3/00- H05H 15/00

Informative references

Attention is drawn to the following places, which may be of interest for search:

Apparatuses or processes specially adapted for the manufacture of tubes of H01J 33/00	H01J 9/00
Discharge tubes with provision for introducing objects or material to be exposed to the discharge	H01J 37/00
Irradiation devices	G21K 5/00

H01J 33/02

Details {(vessels for operation at high tension H01J 5/06)}

References

Limiting references

This place does not cover:

Vessels for operation at high tension	H01J 5/06

H01J 35/00

X-ray tubes (X-ray lasers H01S 4/00; X-ray technique in general H05G, {e.g. apparatus or processes specially adapted for producing X-rays, not involving X-ray tubes, e.g. involving generation of a plasma H05G 2/00})

Definition statement

This place covers:

Vacuum tubes in which electrons hit a target (commonly termed "anode") in order to produce electromagnetic radiation caused by the deceleration of electrons (Bremsstrahlung) or a recombination of inner core holes (characteristic radiation).

All technical details of x-ray tubes, as long as these are situated inside the vacuum housing or an integral part of the housing (e.g. radiation transmissive windows).

References

Limiting references

This place does not cover:

Other means of producing x-rays, e.g. Synchrotron radiation, inverse Compton scattering etc.	H05G 2/00
Producing x-rays from a hot plasma by recombinations inside the plasma	H05G 2/001

Informative references

Attention is drawn to the following places, which may be of interest for search:

X-ray lasers	H01S 4/00
X-ray technique in general	H05G
Circuits providing power to x-ray tubes or otherwise driving it ("x-ray generators")	H05G 1/00

Special rules of classification

To this group, Indexing Codes

H01J 2235/02 - H01J 2235/0236,

H01J 2235/062 - H01J 2235/068,

H01J 2235/081 - H01J 2235/1295,

H01J 2235/161 - H01J 2235/168 and

H01J 2235/183 - H01J 2235/205

are obligatory to be attributed as invention information for further details.

Indexing Codes

H01J 2235/06,

H01J 2235/08,

H01J 2235/16 and

H01J 2235/18

may optionally be used for additional information.

H01J 35/06

Cathodes {(electron guns in general H01J 3/02)}

References

Informative references

Attention is drawn to the following places, which may be of interest for search:

Electron guns in general	H01J 3/02

H01J 35/065

{Field emission, photo emission or secondary emission cathodes}

Special rules of classification

Emissive structures consisting of carbon nanotubes [CNT] are additionally covered by Indexing Code H01J 2201/30446.

H01J 35/08

Anodes; Anti cathodes {(anti-cathodes serving as windows H01J 35/18)}

Definition statement

This place covers:

Electrodes impacted by charged particles in order to produce X-rays.

References

Informative references

Attention is drawn to the following places, which may be of interest for search:

Anti-cathodes serving as windows	H01J 35/18
Target substrate interlayers	H01J 2235/084
Transmission Targets	H01J 2235/087
Laminated Targets	H01J 2235/088

H01J 35/10

Rotary anodes; Arrangements for rotating anodes; Cooling rotary anodes

References

Informative references

Attention is drawn to the following places, which may be of interest for search:

Rotating anode tubes in general	H01J 35/26
Cooling characterized by the method	H01J 2235/1225

Refractory alloys	C22C 27/00

H01J 35/101

{Arrangements for rotating anodes, e.g. supporting means; greasing; sealing the axle; shielding or protecting the driving means}

References

Informative references

Attention is drawn to the following places, which may be of interest for search:

Dynamic pressure bearing	H01J 2235/106
Rotating shafts per se	F16C

H01J 35/106

{Active cooling, e.g. fluid flow, heat pipes}

References

Limiting references

This place does not cover:

Techniques particularly adapted for cooling of a tube inside closed housing	H05G 1/04

H01J 35/108

{Substrates for and bonding of emissive target, e.g. composite structures}

Definition statement

This place covers:

Substrates for rotating anode, such that the substrate requires an additional target layer; Details relating to the bonding of target to substrate e.g. using metallic interlayers

References

Informative references

Attention is drawn to the following places, which may be of interest for search:

Target substrate interlayers	H01J 2235/084
Laminated Targets	H01J 2235/088

H01J 35/12

Cooling non-rotary anodes {(mounting the tube within a closed housing, e.g. for cooling purposes H05G 1/04)}

References

Informative references

Attention is drawn to the following places, which may be of interest for search:

Mounting the tube within a closed housing, e.g. for cooling purposes	H05G 1/04

H01J 35/14

Arrangements for concentrating, focusing, or directing the cathode ray {(for cathode ray tubes in general H01J 29/46)}

Definition statement

This place covers:

Focusing of the electron beam, e.g. by magnetic means; directing and deflecting of the beam e.g. by electrostatic means; microfocus X-ray tubes

References

Informative references

Attention is drawn to the following places, which may be of interest for search:

Arrangements for concentrating, focusing, or directing the cathode ray for cathode ray tubes in general	H01J 29/46
X-ray tubes with Electrodes for controlling the current of the cathode ray, e.g. control grids	H01J 35/045

H01J 35/16

Vessels; Containers; Shields associated therewith {(vessels for high tension operation in general H01J 5/06; mounting the tube within a closed housing H05G 1/04)}

References

Informative references

Attention is drawn to the following places, which may be of interest for search:

Vessels for high tension operation in general	H01J 5/06
Shields against charged particles	H01J 2235/168
Mounting the tube within a closed housing	H05G 1/04

H01J 35/18

Windows

Definition statement

This place covers:

Structures transparent to X-rays but separating a space of certain properties, e.g. ambient pressure, from a space having different respective properties, e.g. low pressure, including windows acting as target anodes.

Further information:

Windows acting as target anodes are additionally covered by the Indexing Code H01J 2235/186.

H01J 35/20

Selection of substances for gas fillings; Means for obtaining or maintaining the desired pressure within the tube, e.g. by gettering {(for gas-discharge tubes in general H01J 7/02 - H01J 61/76; evacuating, filling, gettering in general H01J 9/38)}

References

Informative references

Attention is drawn to the following places, which may be of interest for search:

For gas-discharge tubes in general	H01J 7/02 - H01J 61/76
Evacuating, filling, gettering in general	H01J 9/38

H01J 35/24

Tubes wherein the point of impact of the cathode ray on the anode or anti-cathode is movable relative to the surface thereof

Definition statement

This place covers:

Tubes in which said point of impact is movable, e.g.

to limit the local heat load on the anode by means of movement of the anode relative to the beam.

to obtain a variation in focal spot position, e.g. for oversampling.

H01J 35/26

by rotation of the anode or anti-cathode

Definition statement

This place covers:

Rotating anode tubes, i.e. tubes in which the anode rotates in operation, without affecting the position of the the x-ray source, in order to reduce the thermal load on the anode.

References

Informative references

Attention is drawn to the following places, which may be of interest for search:

Details on rotating anodes, cooling or mounting of rotating anodes	H01J 35/10

H01J 35/305

{by using a rotating X-ray tube in conjunction therewith}

Definition statement

This place covers:

Tubes in which the point of generation of X-rays is fixed with respect to the laboratory frame, but not with respect to the vacuum housing of the tube, e.g. because it rotates with the anode.

Further information:

These tubes have been termed "rotary piston radiator" (resulting from a technically wrong translation of the german "Drehkolbenstrahler").

More recently, they are referred to as rotary bulb radiator or rotary envelope radiator.

Example: DE102004056110 (Fig 1)

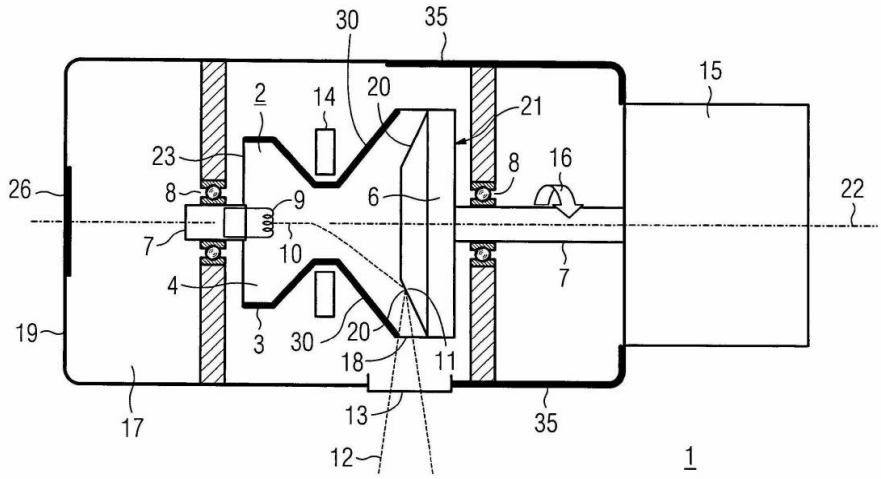

References

Limiting references

This place does not cover:

Anodes which rotate with respect to the vacuum envelope and details related to such anodes	H01J 35/10
Tubes in which the anode rotates with respect to the vacuum envelope	H01J 35/26

H01J 35/32

Tubes wherein the X-rays are produced at or near the end of the tube or a part thereof which tube or part has a small cross-section to facilitate introduction into a small hole or cavity

References

Informative references

Attention is drawn to the following places, which may be of interest for search:

Radiation therapy	A61N 5/00

H01J 37/00

Discharge tubes with provision for introducing objects or material to be exposed to the discharge, e.g. for the purpose of examination or processing thereof (H01J 33/00, H01J 40/00, H01J 41/00, H01J 47/00, H01J 49/00 take precedence; {scanning-probe techniques or apparatus G01Q} ; contactless testing of electronic circuits using electron beams G01R 31/305; {particle accelerators H05H})

Definition statement

This place covers:

Discharge tubes or details thereof, in which a sample, workpiece or similar object can be placed and removed that is exposed to a discharge (in the following "tubes") to be e.g. analysed or processed (in the following "analysis tubes" or "treatment tubes", respectively)

Typical "discharge tubes" covered by this main group are

electron microscopes or ion microscopes

spot analysers (i.e. systems with relatively large (larger than about 50-100nm) beam spots for Auger or particle beam induced X-ray analysis)

focused ion beam instruments

ion implanters

electron or ion lithography systems (i.e. for producing latent images for future processing steps in resists)

systems for working materials with electron or ion beams (e.g. electron beam welding or cutting or drilling or machining, e-beam evaporation, etc.)

systems for plasma-treatment (e.g. plasma etching or deposition systems).

The "discharge" is usually in the form of a dedicated, possibly guided and/or focused beam (in the following "beam tubes") of charged particles or in the form of a plasma (in the following "plasma tubes") not forming a beam.

Typical energies of the particles in the discharge (e.g. electrons or ions in a beam) are in general below a few hundred keV.

Nevertheless, this group also covers ion implanters and ultra high energy electron microscopes (both with energies of up to several MeV).

Further information:

General Structure of the scheme H01J 37/00:

The scheme both for classes and indexing-codes is organised according to the following principle:

classes for details of the tube (sources, beam forming, sample holder etc.): H01J 37/02 - H01J 37/248 and H01J 2237/002 - H01J 2237/2487 ("details classes")

analysing or imaging: H01J 37/252 - H01J 37/2955 and H01J 2237/25 - H01J 2237/2857

particle beam processing: H01J 37/30 - H01J 37/3178 and H01J 2237/30 - H01J 2237/31747

processing with gas-filled tubes (plasma tubes): H01J 37/32 - H01J 37/36 and H01J 2237/32 - H01J 2237/339

References

Limiting references

This place does not cover:

Discharge tubes with provision for emergence of electrons or ions from the vessel; Lenard tubes	H01J 33/00
Photoelectric discharge tubes not involving the ionisation of a gas	H01J 40/00
Discharge tubes for measuring pressure of introduced gas or for detecting presence of gas; Discharge tubes for evacuation by diffusion of ions	H01J 41/00
Tubes for determining the presence, intensity, density or energy of radiation or particles	H01J 47/00
Particle spectrometer or separator tubes (in particular mass spectreters)	H01J 49/00
Scanning tunnelling microscopes	G01Q 60/10
X-ray microscopes wherein a (sub)-nanometre sized x-ray source is generated in an SEM-like apparatus by focusing an electron probe onto an x-ray transmissive target (cf. e.g. EP1557864)	G21K 7/00

Informative references

Attention is drawn to the following places, which may be of interest for search:

General purpose ion sources	H01J 27/00
Sterilising by irradiation (depending on the sterilised product)	A61L 2/087, B65B 55/08, A23L 3/263
Coating by physical vapour deposition (PVD) such as vacuum evaporation, sputtering or ion implantation of the coating forming material	C23C 14/00
Chemical vapour deposition (CVD) processes	C23C 16/00
Measuring i.a. length	G01C
Preparation of specimen for investigation	G01N 1/00
Determining chemical or physical properties of materials by investigating or analysing by the use of wave or particle radiation	G01N 23/00
Scanning probe techniques	G01Q
Contactless testing using electron beams of electronic circuits and of individual semiconductor devices, respectively	G01R 31/305 and G01R 31/2653

Measurement of nuclear or x-radiation	G01T
Light optics	G02B
Light optical microscopes	G02B 21/00
Lithography	G03F 1/00
Holographic processes or apparatus using particles	G03H 5/00
Sensing record carriers by corpuscular radiation	G06K 7/10
Techniques for handling particles or ionising radiation not otherwise provided for	G21K 1/00 - G21K 5/10
Irradiation devices	G21K 5/00
Semiconductor devices	H01L
Manufacture of semiconductor devices by ion implantation	H01L 21/265
Testing of semiconductor devices during manufacture	**H01L21/66**
Modifying the pattern of conductors of semiconductor devices	H01L 21/76892
Pumping lasers i.a. by electron beams	H01S 3/0959, H01S 5/04
Apparatus for generating ions to be introduced into non-enclosed gases, e.g. into the atmosphere	H01T 23/00
Plasma Technique and particle accelerators;in particular as indicated in the following:	H05H
Generating plasma; Handling plasma	H05H 1/00
Targets, e.g. pellets for fusion reactions by i.a. charged particles beam injection	H05H 1/22
Production or acceleration of neutral particle beams	H05H 3/00
Direct voltage accelerators; Accelerators using single pulses	H05H 5/00
Targets for producing nuclear reactions	H05H 6/00
Details of devices in H05H 9/00, H05H 11/00, H05H 13/00	H05H 7/00
Linear accelerators	H05H 9/00
Magnetic induction accelerators, e.g. betatrons	H05H 11/00
Magnetic resonance accelerators; Cyclotrons	H05H 13/00
Methods or devices for acceleration of charged particles not otherwise provided for	H05H 15/00

Special rules of classification

Documents should usually be classified in all applicable categories:

If a document concerns embodiments or elements in detail which are covered by several subgroups dependent on a higher hierarchy group, the relevant information is classified in all the respective subgroups (example: a document concerning both ion sources and lenses is classified in H01J 37/08 and in H01J 37/10, not in the higher group H01J 37/04).

The higher hierarchy group is to be used

if no respective subgroup exists

if the general idea is relevant for the higher hierarchy as well as all the respective subgroups (example: a specific construction valid for all types of beam deflection is not classified in all the lower

subgroups of H01J 37/147 but in H01J 37/147, but Indexing Codes under H01J 2237/00 should be given for the (most important) embodiments)

If a document relates to a detail for which a group in H01J 37/02 - H01J 37/248 exists, this is classified there if none of the two following precedence rules applies:

- generating/controlling the discharge is classified in H01J 37/04 and subgroups, unless [entire] optical systems of treatment tubes are concerned, which are classified in H01J 37/3007
- specific details for plasma tubes are usually considerably different from those of beam tubes and are classified in the subgroups of H01J 37/32 - if they are not of general interest for H01J 37/00, e.g. if relevant for different types of tubes.

If the classified detail is specific for a certain type or for certain types of tubes, then this tube type(s) should be classified with the appropriate symbol in either H01J 37/00 or H01J 2237/00, depending on the specificity.

For example:

A document discloses and claims a particular construction of an objective lens specifically in a scanning electron microscope and generally states that this lens could be employed also for all other types of charged particle beam instruments like transmission electron microscopes, focused ion beam systems and ion implanters. The document is classified in the appropriate subgroup in H01J 37/10 (lens) and in H01J 37/28 (SEM), it is however not classified in view of TEM, FIB or ion implanters because lenses for these systems are usually considerably different.

Invention information is classified in the respective symbol under H01J 37/00; Indexing Codes under H01J 2237/00 are to be given where they provide additional aspects or provide for a more detailed subdivision.

For example:

A document concerns details of the construction of a gas field ion source specifically in a FIB-microworking device. This document is classified in H01J 37/08 (ion sources) and H01J 37/3056 (microworking). It is further classified in H01J 2237/061 (construction of source) and H01J 2237/0807 (gas field ion source).

Additional (non-invention information) is classified with symbol under H01J 37/00 and/or Indexing Codes, if it is relevant for search:If a certain (non-claimed) feature is described in particular detail, it should be classified similar to invention information. If a combination of features is described which goes beyond what is implicit to a certain device or only minor but still search-relevant information is given on the particular feature, said features should be classified with respective Indexing Code(s).

For example: For the claimed construction of the gas field ion source in the FIB-system of the above example, in addition, also a known construction of a very fast beam blanker is described in detail which works particularly well with the inventive source. Then the symbol for the beam blanker H01J 37/045 and the Indexing Code H01J 2237/0432 (high speed beam blanking) should be given in addition.

Reminder in view of the structure of subclass H01J as a whole:

Rules for classification regarding H01J for general elements:

As it is the case in H01J in general, for elements of general type which may be found in other types of discharge tubes, a class corresponding to general schemes H01J 1/00 - H01J 7/00 is given, e.g. for cathodes, vessels, cooling means or the like. Same rules apply for manufacturing procedures (H01J 9/00), unless specific to the tube concerned (as however elements for the tubes covered by H01J 37/00 are usually very specific, this seldom applies).

Synonyms and Keywords

In patent documents, the following abbreviations are often used:

SEM	scanning electron microscope
REM	Rasterelektronenmikrokop (German acronym for "SEM")
TEM	transmission electron microsope
STEM	scanning transmission electron microscope
FIB	focused ion beam
LMIS	liquid metal ion source
GFIS	gas field ion source

H01J 37/02

Details

Definition statement

This place covers:

Details for all types of tubes in H01J 37/00; the respective documents regarding the tube, i.e. for analysis tubes and processing tubes, beam tubes, etc. and plasma tubes of general interest for H01J 37/00, are classified in the subgroup covering the respective detail.

H01J 37/023

{Means for mechanically adjusting components not otherwise provided for (mechanically adjusting from the outside of electron or ion-optical components H01J 37/067; positioning the object or material H01J 37/20; vacuum locks, means for obtaining or maintaining the desired pressure within the tube H01J 37/18; other manipulating devices H01L 21/48, G21F)}

References

Limiting references

This place does not cover:

Mechanically adjusting from the outside of electron or ion-optical components	H01J 37/067
Positioning the object or material	H01J 37/20

Informative references

Attention is drawn to the following places, which may be of interest for search:

Vacuum locks, means for obtaining or maintaining the desired pressure within the tube	H01J 37/18
Other manipulating devices	H01L 21/48, **G21F/00**

H01J 37/026

{Means for avoiding or neutralising unwanted electrical charges on tube components}

Definition statement

This place covers:

- means for avoiding or neutralising unwanted electrical charges on the sample or in the beam

H01J 37/04

Arrangements of electrodes and associated parts for generating or controlling the discharge, e.g. electron-optical arrangement, ion-optical arrangement {(electron or ion-optical systems for localised treatment of materials H01J 37/3007; discharge control means in gas filled discharge tubes H01J 37/32009)}

Definition statement

This place covers:

Ion-optical systems only of tubes of the types in H01J 37/252-H01J 37/2955 (analysis/beam tubes) or details for which no class specific subclass is provided below

References

Limiting references

This place does not cover:

Electron or ion-optical systems for localised treatment of materials	H01J 37/3007
Discharge control means in gas filled discharge tubes	H01J 37/32623, H01J 37/3266, H01J 37/32697

H01J 37/05

Electron or ion-optical arrangements for separating electrons or ions according to their energy {or mass} (particle separator tubes H01J 49/00)

References

Limiting references

This place does not cover:

Particle separator tubes	H01J 49/00

H01J 37/06

Electron sources; Electron guns {(electron sources in general H01J 1/02, H01J 19/02; electron guns in general H01J 3/02)}

References

Informative references

Attention is drawn to the following places, which may be of interest for search:

Electron sources in general	H01J 1/02, H01J 19/02
Electron guns in general	H01J 3/02

H01J 37/063

Geometrical arrangement of electrodes for beam-forming

Definition statement

This place covers:

Schematic construction, arrangement of potential or fields or voltages; more related to the functioning of the source rather than the specific "hardware" construction

H01J 37/065

Construction of guns or parts thereof (H01J 37/067 - H01J 37/077 take precedence)

Definition statement

This place covers:

Physical construction, "hardware oriented" (e.g. mechanical construction, contact arrangements)

References

Limiting references

This place does not cover:

Replacing parts of guns; Mutual adjustment of electrodes	H01J 37/067
Eliminating deleterious effects due to thermal effects or electric or magnetic fields	H01J 37/07
Electron guns using field emission, photo emission, or secondary emission electron sources	H01J 37/073
Electron guns using thermionic emission from cathodes heated by particle bombardment or by irradiation, e.g. by laser	H01J 37/075
Electron guns using discharge in gases or vapours as electron sources	H01J 37/077

H01J 37/067

Replacing parts of guns; Mutual adjustment of electrodes (H01J 37/073 - H01J 37/077 take precedence; vacuum locks H01J 37/18)

References

Limiting references

This place does not cover:

Electron guns using field emission, photo emission, or secondary emission electron sources	H01J 37/073
Electron guns using thermionic emission from cathodes heated by particle bombardment or by irradiation, e.g. by laser	H01J 37/075
Electron guns using discharge in gases or vapours as electron sources	H01J 37/077
Vacuum locks	H01J 37/18

H01J 37/07

Eliminating deleterious effects due to thermal effects or electric or magnetic fields (H01J 37/073 - H01J 37/077 take precedence)

References

Limiting references

This place does not cover:

Electron guns using field emission, photo emission, or secondary emission electron sources	H01J 37/073
Electron guns using thermionic emission from cathodes heated by particle bombardment or by irradiation, e.g. by laser	H01J 37/075
Electron guns using discharge in gases or vapours as electron sources	H01J 37/077

H01J 37/10

Lenses

Definition statement

This place covers:

only the lenses themselves

References

Informative references

Attention is drawn to the following places, which may be of interest for search:

Electron/ion optical arrangements	H01J 37/04, H01J 37/3007

H01J 37/1413

{Means for interchanging parts of the lens, e.g. pole pieces, within the tube (mechanically adjusting electron (ion) optical components H01J 37/15)}

References

Limiting references

This place does not cover:

Mechanically adjusting electron (ion) optical components	H01J 37/15

H01J 37/147

Arrangements for directing or deflecting the discharge along a desired path ({H01J 37/045 takes precedence } ; lenses H01J 37/10)

References

Limiting references

This place does not cover:

Beam blanking or chopping, i.e. arrangements for momentarily interrupting exposure to the discharge	H01J 37/045

Informative references

Attention is drawn to the following places, which may be of interest for search:

Lenses	H01J 37/10

H01J 37/15

External mechanical adjustment of electron or ion optical components (H01J 37/067, H01J 37/20 take precedence)

References

Limiting references

This place does not cover:

Replacing parts of guns; Mutual adjustment of electrodes	H01J 37/067
Means for supporting or positioning the objects or the material; Means for adjusting diaphragms or lenses associated with the support	H01J 37/20

H01J 37/18

Vacuum locks; {Means for obtaining or maintaining the desired pressure within the vessel (vacuum locks for electron-beam tubes in general H01J 29/865)}

Definition statement

This place covers:

everything associated with generating, maintaining, etc., vacuum (e.g. pumps, valves) as long as in connection with the tube

References

Informative references

Attention is drawn to the following places, which may be of interest for search:

Vacuum locks for electron-beam tubes in general	H01J 29/865

H01J 37/20

Means for supporting or positioning the objects or the material; Means for adjusting diaphragms or lenses associated with the support {(introducing the objects H01J 37/18; preparing specimens for investigation G01N 1/06, G01N 1/28)}

References

Limiting references

This place does not cover:

Introducing the objects	H01J 37/18

Informative references

Attention is drawn to the following places, which may be of interest for search:

Preparing specimens for investigation	G01N 1/06, G01N 1/28
Apparatus specially adapted for handling wafers during manufacture or treatment of semiconductor or electronic solid state devices or components	H01L 21/67

H01J 37/21

Means for adjusting the focus {(adjusting the focus while observing the image by photographic or optical means H01J 37/22; means for observing the object or the point of impact on the object in tubes for the localised treatment of materials H01J 37/3005)}

Definition statement

This place covers:

Means and methods for automatic focusing

References

Limiting references

This place does not cover:

Adjusting the focus while observing the image by photographic or optical means	H01J 37/22

Informative references

Attention is drawn to the following places, which may be of interest for search:

Means for observing the object or the point of impact on the object in tubes for the localised treatment of materials	H01J 37/3005
Optical elements, systems or apparatus per se	G02B

H01J 37/22

Optical or photographic arrangements associated with the tube {(using a CRT for the display of the image in a scanning electron microscope H01J 37/28; observing the object or the point of impact on the object in tubes for the localised treatment of materials H01J 37/3007)}

References

Informative references

Attention is drawn to the following places, which may be of interest for search:

Using a CRT for the display of the image in a scanning electron microscope	H01J 37/28
Observing the object or the point of impact on the object in tubes for the localised treatment of materials	H01J 37/3007
Optical elements, systems or apparatus per se	G02B

Glossary of terms

In this place, the following terms or expressions are used with the meaning indicated:

Optical in this subgroup relates to light-optical

H01J 37/222

{Image processing arrangements associated with the tube (image data processing or generation, in general G06T)}

References

Informative references

Attention is drawn to the following places, which may be of interest for search:

Image data processing or generation specially adapted for particular applications, see the relevant subclass	G06K, G09G, H04N
Image data processing or generation, in general	G06T
Geometric image transformation for image mosaicing	G06T 3/4038

H01J 37/241

{High voltage power supply or regulation circuits (components H01J 37/248)}

References

Informative references

Attention is drawn to the following places, which may be of interest for search:

Components associated with high voltage supply	H01J 37/248

H01J 37/242

{Filament heating power supply or regulation circuits (H01J 37/241 takes precedence)}

References

Limiting references

This place does not cover:

High voltage power supply or regulation circuits	H01J 37/241

H01J 37/243

{Beam current control or regulation circuits (H01J 37/241 takes precedence)}

References

Limiting references

This place does not cover:

High voltage power supply or regulation circuits	H01J 37/241

H01J 37/244

Detectors; Associated components or circuits therefor (detectors per se G01T)

References

Limiting references

This place does not cover:

Detectors per se	G01T

H01J 37/248

Components associated with high voltage supply ({Means for measuring the high voltage per se G01R 15/00} ; high voltage supply per se H02J, H02M)

References

Limiting references

This place does not cover:

Means for measuring the high voltage per se	G01R 15/00
High voltage supply per se	H02J, H02M

H01J 37/252

Tubes for spot-analysing by electron or ion beams; Microanalysers (investigating or analysing thereby G01N 23/22)

Definition statement

This place covers:

Beam tubes that do not deliver "spatial images" based on secondary and backscattered electrons, but based on other beam-induced information like e.g. Auger-electrons or X-rays - leading e.g. rather to material contrast (today mainly attachments or subsystems of electron microscopes rather than dedicated microanalysers)

References

Informative references

Attention is drawn to the following places, which may be of interest for search:

Investigating or analysing with tubes for spot-analysing by electron or ion beams	G01N 23/22

H01J 37/256

using scanning beams

Definition statement

This place covers:

Further information:

"Spot analysis" in scanning electron or ion microscopes (in contrast to dedicated spot- or microanalysers) is classified H01J 37/28 and should in respective situations in addition be classified in H01J 37/256 or a respective indexing-code depending on the degree of specific adaption of the overall system

H01J 37/26

Electron or ion microscopes; Electron or ion diffraction tubes

Definition statement

This place covers:

Transmission Electron Microscopes

References

Limiting references

This place does not cover:

Scanning Electron Microscopes	H01J 37/28

Informative references

Attention is drawn to the following places, which may be of interest for search:

Scanning probe techniques	G01Q

Special rules of classification

Scanning Electron Microscopes are covered by in H01J 37/28, also Scanning Transmission Microscopes are covered by H01J 37/28 with Indexing Code H01J 2237/2802

H01J 37/261

{Details}

Definition statement

This place covers:

Details (not covered by the "Details"-classes H01J 37/02 and below) specific to electron or ion microscopes (both scanning and non-scanning)

H01J 37/266

{Measurement of magnetic- or electric fields in the object; Lorentzmicroscopy (emission microscopes H01J 37/285; reflecting microscopes H01J 37/29; spot analysing H01J 37/252)}

References

Limiting references

This place does not cover:

Spot analysing	H01J 37/252
Emission microscopes	H01J 37/285
Reflecting microscopes	H01J 37/29

H01J 37/28

with scanning beams ({H01J 37/268, H01J 37/292, H01J 37/2955 take precedence } ; microanalysers using scanning beams H01J 37/256)

References

Limiting references

This place does not cover:

Microanalysers using scanning beams	H01J 37/256
Measurement of magnetic- or electric fields in the object; Lorentzmicroscopy with scanning beams	H01J 37/268
Reflection microscopes using scanning ray	H01J 37/292
Electron or ion diffraction tubes using scanning ray	H01J 37/2955

H01J 37/285

Emission microscopes, e.g. field-emission microscopes

Definition statement

This place covers:

also so-called "atom probes"

H01J 37/295

Electron or ion diffraction tubes

Definition statement

This place covers:

also spin analysers

References

Informative references

Attention is drawn to the following places, which may be of interest for search:

Electron or ion-optical details	H01J 37/06 - H01J 37/153

H01J 37/3002

{Details}

Definition statement

This place covers:

Details (which are not covered by the "Details"-classes H01J 37/02 and below) specific to beam treatment tubes

H01J 37/3007

{Electron or ion-optical systems (electron or ion-optical details H01J 37/06 - H01J 37/153)}

References

Limiting references

This place does not cover:

Ion optical systems for analysis tubes	H01J 37/04

Informative references

Attention is drawn to the following places, which may be of interest for search:

Electron or ion-optical details	H01J 37/06 - H01J 37/153

H01J 37/302

Controlling tubes by external information, e.g. programme control (H01J 37/304 takes precedence)

References

Limiting references

This place does not cover:

Controlling tubes by information coming from the objects or from the beam, e.g. correction signals	H01J 37/304

H01J 37/305

for casting, melting, evaporating or etching {(methods for casting or melting of metals with electron beam or gas discharges C22B 9/22)}

References

Limiting references

This place does not cover:

Methods for casting or melting of metals with electron beam or gas discharges	C22B 9/22

H01J 37/3053

{for evaporating or etching}

References

Informative references

Attention is drawn to the following places, which may be of interest for search:

Methods for evaporating metals with electron beams	C23C 14/30

H01J 37/3056

{for microworking, e.g. etching of gratings, trimming of electrical components (trimming of resistors H01C 17/22)}

Definition statement

This place covers:

also for cutting / depositing by focussed ion beam, e.g. for fabrication of MEMS (micro electro mechanical systems))

References

Informative references

Attention is drawn to the following places, which may be of interest for search:

Processes or apparatus specially adapted for the manufacture or treatment of micro-structural devices or systems, e.g. MEMS	B81C
Trimming of resistors	H01C 17/22

H01J 37/31

for cutting or drilling {(methods for cutting or drilling metals with electron beams B23K 15/00)}

References

Limiting references

This place does not cover:

Methods for cutting or drilling metals with electron beams	B23K 15/00

H01J 37/315

for welding {(methods for welding metals with electron beams B23K 15/00)}

References

Limiting references

This place does not cover:

Methods for welding metals with electron beams	B23K 15/00

H01J 37/317

for changing properties of the objects or for applying thin layers thereon, e.g. for ion implantation (H01J 37/36 takes precedence)

References

Limiting references

This place does not cover:

Gas-filled discharge tubes	H01J 37/36

H01J 37/3171

{for ion implantation (plasma immersion ion implantation H01J 37/32412)}

References

Limiting references

This place does not cover:

Plasma immersion ion implantation	H01J 37/32412

H01J 37/3174

{Particle-beam lithography, e.g. electron beam lithography}

References

Limiting references

This place does not cover:

Masks, i.e. mask manufacture, inspection, cleaning, repair	G03F 1/00

Informative references

Attention is drawn to the following places, which may be of interest for search:

Electron or ion microscopes	H01J 37/26
Stereolithography, i.e. manufacturing of 3D objects	B29C 67/0051
Hydrostatic bearings	F16C 29/025
Magnetic or electric bearings	F16C 32/04
Vibrations dampers	F16F 9/00
Measuring by electric or magnetic means	G01B 7/00
Interferometers	G01B 9/02
Measuring by optical means (e.g. for alignment)	G01B 11/00
Measuring optical phase differences	G01J 9/00
Inspection by optical means	G01N 21/00
Measuring electric or magnetic variables	G01R
Measuring ionising radiation	G01T 1/00

Microscopes	G02B 21/00
Originals (masks)	G03F 1/00
Lithography applications (e.g. holography, imprint)	G03F 7/00 - G03F 7/0037
Resists	G03F 7/004 - G03F 7/18
Exposure	G03F 7/20- G03F 7/2065
Photolithography, e.g. high resolution photolithography	G03F 2007/2067
Exposure strategies	G03F 7/213 - G03F 7/24
Mask-workpiece alignment in photolithography	G03F 9/70
Control and regulating systems	G05B
Lithographic production of optical disks	G11B 7/26
Testing of semiconductor devices during manufacture	**H01L21/66**
Workpiece handling	H01L 21/67
Apparatus for manufacturing or treating semiconductors not provided elsewhere	H01L 21/67005
Marks on workpieces (e.g. alignment marks)	H01L 23/544
Linear motors	H02K 41/02

Synonyms and Keywords

In patent documents, the following abbreviations are often used:

E	electron
E beam, e-beam	electron beam

H01J 37/32

Gas-filled discharge tubes, {e.g. for surface treatment of objects such as coating, plating, etching, sterilising or bringing about chemical reactions} ({general methods or devices for heat treatments of ferrous or non-ferrous metals or alloys by cathodic discharges C21D 1/38; methods of carburising or nitriding of metals in general C23C 8/00; methods for coating, plating or surface treating of or with metallic material C23C 8/36, C23C 14/32, C23C 16/50; methods for coating, plating or surface treating of or with semiconductors H01L 21/00; } heating by discharge H05B)

Definition statement

This place covers:

Gas filled discharge tubes for plasma processing.

The different aspects covered by this group are:

- production of plasma; e.g. RF or microwave plasma sources;
- constructional aspects (hardware) of the apparatus;
- operating strategies, e.g. remote plasma generation, specific treatments such as localised processing or treating interior parts of workpieces;
- testing and control of the apparatus; e.g. gas control, generation of magnetic or electrostatic fields for controlling the plasma, process monitoring;

- arrangement, mounting, housing, environment, cleaning or maintenance of the apparatus;
- cathodic sputtering systems;cleaning surfaces while plating with ions of materials introduced into the discharge.

References

Limiting references

This place does not cover:

Chemical coating processes using plasma	C23C 8/36; C23C 14/24; C23C 14/34; C23C 14/35; C23C 16/50
Treatment of semiconductors	H01L 21/30; H01L 21/46
Plasma generation	H05H 1/24
Plasma torches	H05H 1/42
Plasma generation using high frequency or microwaves	H05H 1/46

Informative references

Attention is drawn to the following places, which may be of interest for search:

Vacuum locks	H01J 37/18
Means for introducing or removing gases	C23C 14/0063
Coating cavities or hollow spaces, e.g. interior of tubes	C23C 14/046
Substrate holders	C23C 14/50
Coating cavities or hollow spaces, e.g. interior of tubes	C23C 16/045
Surface treatment on the inside of the reaction chamber	C23C 16/4404
Cleaning of reactor or parts inside the reactor by using reactive gases	C23C 16/4405
Introducing gases into reaction chamber or for modifying gas flows in reaction chamber	C23C 16/455
Supporting substrates in the reaction chamber	C23C 16/458
Elements in the interior of the support, e.g. electrodes, heating or cooling device	C23C 16/4586
Hydrostatic bearings	F16C 29/025
Magnetic or electric bearings	F16C 32/04
Vibrations dampers	F16F 9/00
Measuring by electric or magnetic means	G01B 7/00
Measuring by optical means	G01B 11/00
Measuring optical phase differences	G01J 9/00
Inspection by optical means	G01N 21/00
Measuring electric or magnetic variables	G01R
Measuring ionising radiation	G01T 1/00
Microscopes	G02B 21/00
Originals (masks)	G03F 1/00
Resists	G03F 7/004 - G03F 7/18
Exposure	G03F 7/20 - G03F 7/2065

High resolution photolithography	G03F 2007/2067
Control and regulating systems	G05B
Treatment of semiconductors	H01L 21/00
Plasma doping	H01L 21/2236
Testing or measuring during manufacturing of semiconductor devices	**H01L21/66**
Workpiece handling	H01L 21/67
Apparatus for manufacturing or treating semiconductors not provided elsewhere	H01L 21/67005
Apparatus for etching	H01L 21/67063
Apparatus with a plurality of work-stations	H01L 21/67155
Loadlocks	H01L 21/67201
Linear motors	H02K 41/02
Impedance-matching networks	H03H 7/38
Matching of load impedance to source impedance	H03H 7/40
Plasma generation	H05H 1/24
Plasma torches	H05H 1/42
Plasma generation using high frequency or microwaves	H05H 1/46

Special rules of classification

The documents related to plasma processing in general should be classified in the relevant H01J 37/32009-H01J 37/32917 subgroups and not in H01J 37/32.

The documents related to cathodic sputtering should be classified in the relevant H01J 37/3402-H01J 37/3476 subgroups and possibly also in H01J 37/34 if they relate to non-magnetron cathodic sputtering. General plasma processing aspects (e.g. gas control or material of the vessel) of documents related to cathodic sputtering should be classified in the relevant H01J 37/32009-H01J 37/32917 subgroups.

Glossary of terms

In this place, the following terms or expressions are used with the meaning indicated:

AC	alternating current
DC	direct current
HF	high frequency
HIPIMS	high impulse power magnetron sputtering
RF	radio frequency
VHF	very high frequency

Synonyms and Keywords

In patent documents, the following abbreviations are often used:

ECR	electron cyclotron resonance
HIPIMS	high impulse power magnetron sputtering
PIII	plasma immersion ion implantation

PII	plasma ion implantation
PLAD	plasma doping
PSII	plasma source ion implantation

H01J 37/34

operating with cathodic sputtering (H01J 37/36 takes precedence; {methods of cathodic sputtering C23C 14/34})

References

Limiting references

This place does not cover:

Cleaning surfaces while plating with ions of materials introduced into the discharge	H01J 37/36

Informative references

Attention is drawn to the following places, which may be of interest for search:

Methods of cathodic sputtering	C23C 14/34

H01J 37/36

for cleaning surfaces while plating with ions of materials introduced into the discharge, e.g. introduced by evaporation {(condensing of electrically charged vapour onto a surface for covering materials with metals C23C 14/32)}

References

Informative references

Attention is drawn to the following places, which may be of interest for search:

Condensing of electrically charged vapour onto a surface for covering materials with metals	C23C 14/32

H01J 40/00

Photoelectric discharge tubes not involving the ionisation of a gas (H01J 49/00 takes precedence; cathode-ray or image-pick-up tubes H01J 31/26)

Definition statement

This place covers:

Electric discharge tubes comprising essentially only a photo-cathode and a detector

References

Limiting references

This place does not cover:

Photo-emissive cathodes per se	H01J 1/34

Image pick-up cathode ray tubes having an input of visible light and electric output	H01J 31/26
Electron-multiplier tubes	H01J 43/00
Ionisation chamber tubes for determining the presence, intensity, density or energy of radiation or particles	H01J 47/00
Particle spectrometer or separator tubes	H01J 49/00

Informative references

Attention is drawn to the following places, which may be of interest for search:

Solid-state photodiodes, i.e. semiconductor devices sensitive to infra-red radiation, light, electromagnetic radiation of shorter wavelength or corpuscular radiation and adapted either for the conversion of the energy of such radiation into electrical energy or for the control of electrical energy by such radiation	H01L 31/00

H01J 40/16

having photo- emissive cathode, e.g. alkaline photoelectric cell (operating with secondary emission H01J 43/00)

References

Informative references

Attention is drawn to the following places, which may be of interest for search:

photo- emissive cathode operating with secondary emission	H01J 43/00

H01J 40/18

with luminescent coatings for influencing the sensitivity of the tube, e.g. by converting the input wavelength (image-conversion or image-amplification tubes H01J 31/50)

References

Informative references

Attention is drawn to the following places, which may be of interest for search:

Image-conversion or image-amplification tubes	H01J 31/50

H01J 41/00

Discharge tubes for measuring pressure of introduced gas {or for detecting presence of gas}; Discharge tubes for evacuation by diffusion of ions

Definition statement

This place covers:

Electric discharge tubes wherein the discharge is used either for measuring the residual gas pressure (ionisation vacuum gauges), or for evacuating by diffusion of ions (ion pumps)

References

Limiting references

This place does not cover:

Means for absorbing or adsorbing gas, e.g. by gettering, common to two or more basic types of discharge tubes	H01J 7/18
Means for obtaining or maintaining the desired pressure within gas-filled discharge tubes with solid cathode	H01J 17/22

Informative references

Attention is drawn to the following places, which may be of interest for search:

Mechanical pumps for fluids	F04
Vacuum gauges by making use of ionisation effects	G01L 21/30

H01J 43/00

Secondary-emission tubes; Electron-multiplier tubes (dynamic electron-multiplier tubes H01J 25/76; secondary-emission detectors for measurement of nuclear or X-radiation G01T 1/28)

Definition statement

This place covers:

Electric discharge tubes comprising secondary-electron emitting electrodes

References

Limiting references

This place does not cover:

Secondary-electron-emitting electrodes	H01J 1/32
Manufacture of secondary-emission electrodes	H01J 9/125
Dynamic electron-multiplier tubes	H01J 25/76
Secondary-electron emitting electrode arrangements in cathode ray tubes	H01J 29/023
Measuring radiation intensity with secondary-emission detectors	G01T 1/28

Application-oriented references

Examples of places where the subject matter of this place is covered when specially adapted, used for a particular purpose, or incorporated in a larger system:

Image-conversion or image-amplification cathode ray tubes	H01J 31/50

Informative references

Attention is drawn to the following places, which may be of interest for search:

Computerised tomographs	A61B 6/03
Avalanche photodiodes	H01L 31/107

Synonyms and Keywords

In patent documents, the following abbreviations are often used:

EMT	Electron Multiplier Tube
MCP	Microchannel Plate
PMT	Photomultiplier Tube

H01J 45/00

Discharge tubes functioning as thermionic generators {(structural combination of fuel element with thermoelectric element G21C 3/40; nuclear power plants using thermionic converters G21D 7/04; structural combination of a radioactive source with a thermionic converter, e.g. radioisotope batteries G21H 1/10; generators in which thermal or kinetic energy is converted into electrical energy by ionisation of a fluid and removal of the charge therefrom H02N 3/00)}

Definition statement

This place covers:

Electric discharge tubes where a heat source thermionically emits electrons, producing an electric power output

References

Limiting references

This place does not cover:

Thermo-electric devices with a junction of dissimilar materials (Seebeeck or Peltier effect)	H01L 35/00
Thermo-electric devices without a junction of dissimilar materials (Nernst-Ettinghausen effect)	H01L 37/00
Generators in which termal or kinetic energy is converted into electrical energy by ionisation of a fluid and removal of the charge therefrom	H02N 3/00

Application-oriented references

Examples of places where the subject matter of this place is covered when specially adapted, used for a particular purpose, or incorporated in a larger system:

Structural combination of nuclear reactor fuel element with thermionic device	G21C 3/40
Nuclear power plants using thermionic converters	G21D 7/04
Structural combination of a radioactive source with a thermionic converter (radioisotope batteries)	G21H 1/10

Informative references

Attention is drawn to the following places, which may be of interest for search:

Refrigeration machines, plant, or systems, using electric or magnetic effects	F25B 21/00

Synonyms and Keywords

In patent documents, the following abbreviations are often used:

TIC	Thermionic Converter

H01J 47/00

Tubes for determining the presence, intensity, density or energy of radiation or particles ({discharge tubes using igniting by associated radioactive materials or fillings, e.g. current stabilising tubes H01J 17/32} ; photoelectric discharge tubes not involving the ionisation of a gas H01J 40/00; {discharge tubes for measuring the pressure, partial pressure of introduced gas or for detecting presence of gas H01J 41/02; ionisation chambers using a solid dielectric G01T 3/008})

Definition statement

This place covers:

Electric discharge tubes used for detecting high energy radiation or particles by ionisation of the gas in the tube

References

Limiting references

This place does not cover:

Discharge tubes using igniting by associated radioactive materials or fillings, e.g. current stabilising tubes	H01J 17/32
Photoelectric discharge tubes not involving the ionisation of a gas	H01J 40/00
Discharge tubes for measuring the pressure, partial pressure of introduced gas or for detecting presence of gas	H01J 41/02
Measuring radiation intensity	G01T 1/16
Measuring neutron radiation using an ionisation chamber filled with a gas, liquid or solid, e.g. frozen liquid, dielectric	G01T 3/008

Informative references

Attention is drawn to the following places, which may be of interest for search:

Radiation therapy	A61N 5/00
Fire alarms using an ionisation chamber for detecting smoke or gas	G08B 17/11

H01J 49/00

Particle spectrometer or separator tubes

Definition statement

This place covers:

- Instruments arranged to generate a spectrum of charged particles according to their mass-to-charge ratio (mass spectrometers) or according to their energy (energy spectrometers);
- Details common to different types of spectrometers

References

Limiting references

This place does not cover:

Optical spectrometry	G01J 3/00
Measuring spectral distribution of X-rays or of nuclear radiation	G01T 1/36

Application-oriented references

Examples of places where the subject matter of this place is covered when specially adapted, used for a particular purpose, or incorporated in a larger system:

Isotope separation by mass spectrography	B01D 59/44
Leak detectors using mass spectrometer detection systems	G01M 3/202
Analyzing materials by investigating the ionization of gases; by investigating electric discharges, e.g. emission of cathode	G01N 27/62
Mass spectrometers specially adapted for column chromatography	G01N 30/72
Methods of protein analysis involving mass spectrometry	G01N 33/6848

Informative references

Attention is drawn to the following places, which may be of interest for search:

Containers for laboratory use, for the purpose of retaining a material to be analysed	B01L 3/50
Electrostatic spraying apparatus	B05B 5/00
General methods for the preparation of peptides	C07K 1/00
Methods for sequencing involving nucleic acids	C12Q 1/6869
Sampling; Preparing specimens for investigation	G01N 1/00
Investigating or analysing materials by the use of optical means (infrared, visible, ultraviolet radiation)	G01N 21/00
Investigating materials by measuring secondary emission	G01N 23/22
Automatic analysis devices for supplying samples to flow-through analysers	G01N 35/1095
Recognising patterns in signals and combinations thereof	G06K 9/00496

Special rules of classification

In classifying particle separators, no distinction is made between spectrometry and spectrography, the difference being only in the manner of detection which in the first case is electrical and in the second case is by means of a photographic film.

Classification codes "invention information" should be allocated only to features or aspects peculiar to the invention. Further elements described as conventional should not be classified.

Example: a particular combination of an electrospray ion source with a quadrupole ion guide should be classified in both H01J 49/165 and H01J 49/063. However, a particular electrospray ion source followed by either an ion guide, a capillary or a skimmer should be classified only in H01J 49/165.

Classification codes "additional information" should be allocated for the documents where the use of a particle spectrometer is an essential feature of an invention, but where a conventional instrument

is used. In this case allocation of a further code "invention information" (including circulation to other technical fields) is compulsory.

Example: if a method of protein analysis, classified in G01N 33/6848, includes an essential step of analysis by a standard time-of-flight mass spectrometer, H01J 49/40 should be allocated as additional information.

Synonyms and Keywords

CID	collision induced dissociation
ESI	electrospray ionisation
FT	fourier transform
ICR	ion cyclotron resonance
IMS	ion mobility spectrometry
MALDI	matrix-assisted laser/desorption ionisation
MS	mass spectrometry
Q or q	quadrupole employed in a combination, Q=with mass filtering, q=collision cell, e.g. Qq-TOF
QIT	quadrupole ion trap
TOF	time-of-flight

H01J 49/0004

{Imaging particle spectrometry}

References

Informative references

Attention is drawn to the following places, which may be of interest for search:

Ion or electron microscope	H01J 37/26
Emission microscopes	H01J 37/285
Measuring secondary emission	G01N 23/22
Scanning probes	G01Q
Image processing	G06T

H01J 49/0018

{Microminiaturised spectrometers, e.g. chip-integrated devices, Micro-Electro-Mechanical Systems [MEMS]}

References

Informative references

Attention is drawn to the following places, which may be of interest for search:

Micro-structural systems per se	B81B 7/00

H01J 49/0404

{Capillaries used for transferring samples or ions (electrospray nozzles H01J 49/167)}

Definition statement

This place covers:

e.g. EP1225616

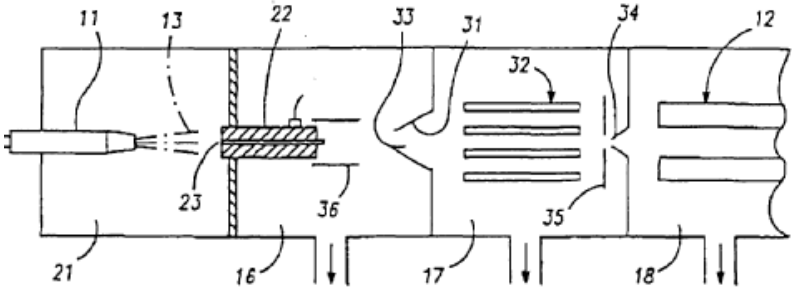

(PRIOR ART)

FIG.—1

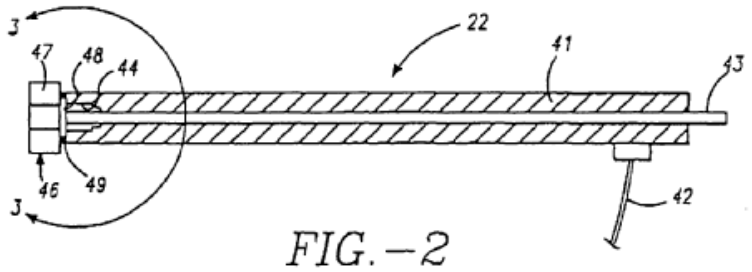

FIG.—2

H01J 49/0418

{for laser desorption, e.g. matrix-assisted laser desorption/ionisation [MALDI], surface enhanced laser desorption/ionisation [SELDI] plates}

Definition statement

This place covers:

e.g. WO200706164

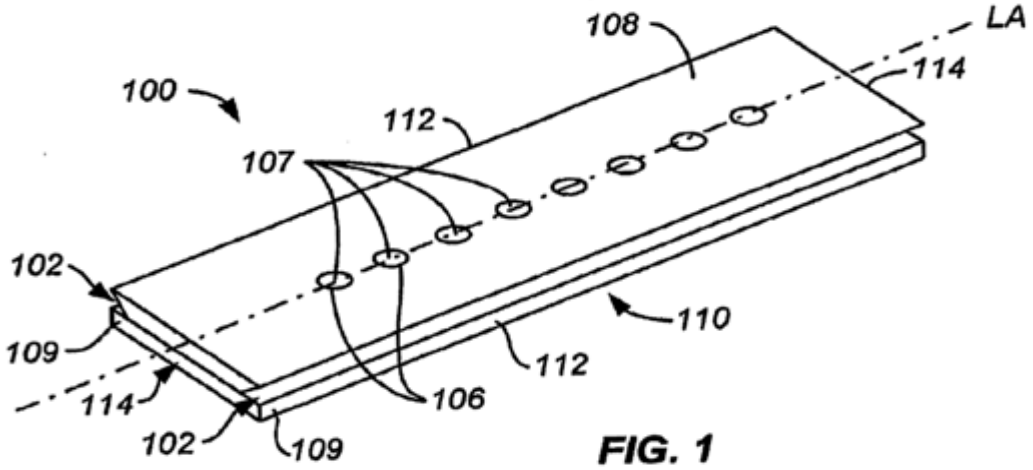

FIG. 1

H01J 49/061

{Ion deflecting means, e.g. ion gates}

Definition statement

This place covers:

e.g. US5696375

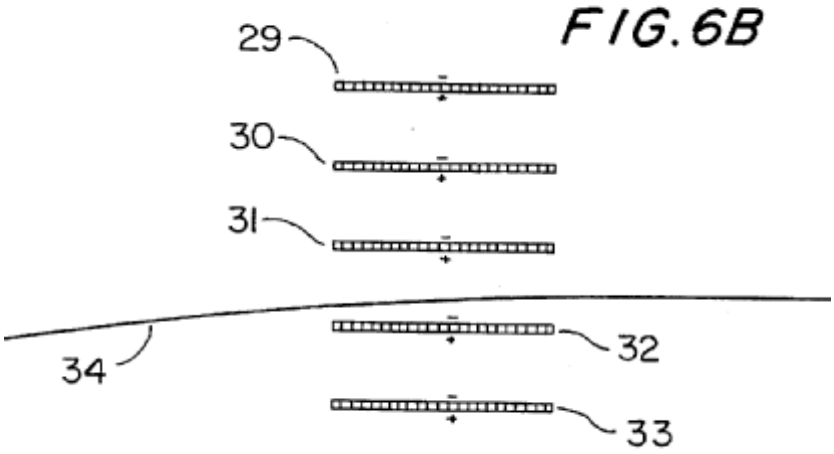

H01J 49/063

{Multipole ion guides, e.g. quadrupoles, hexapoles}

Definition statement

This place covers:

e.g. WO9938193

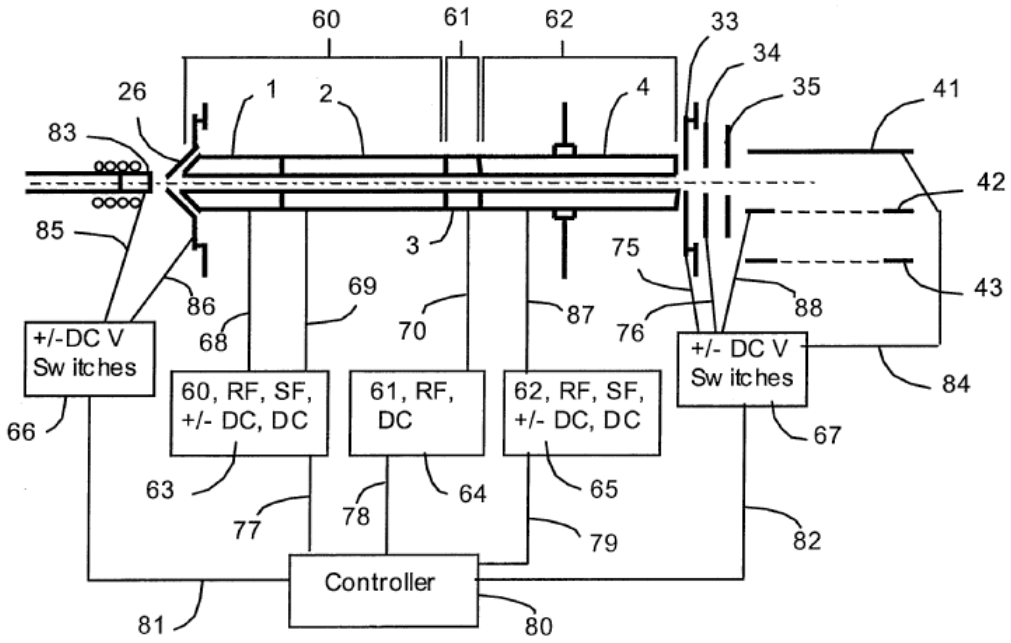

Figure 2

H01J 49/065

{having stacked electrodes, e.g. ring stack, plate stack}

Definition statement

This place covers:

e.g. EP1220291

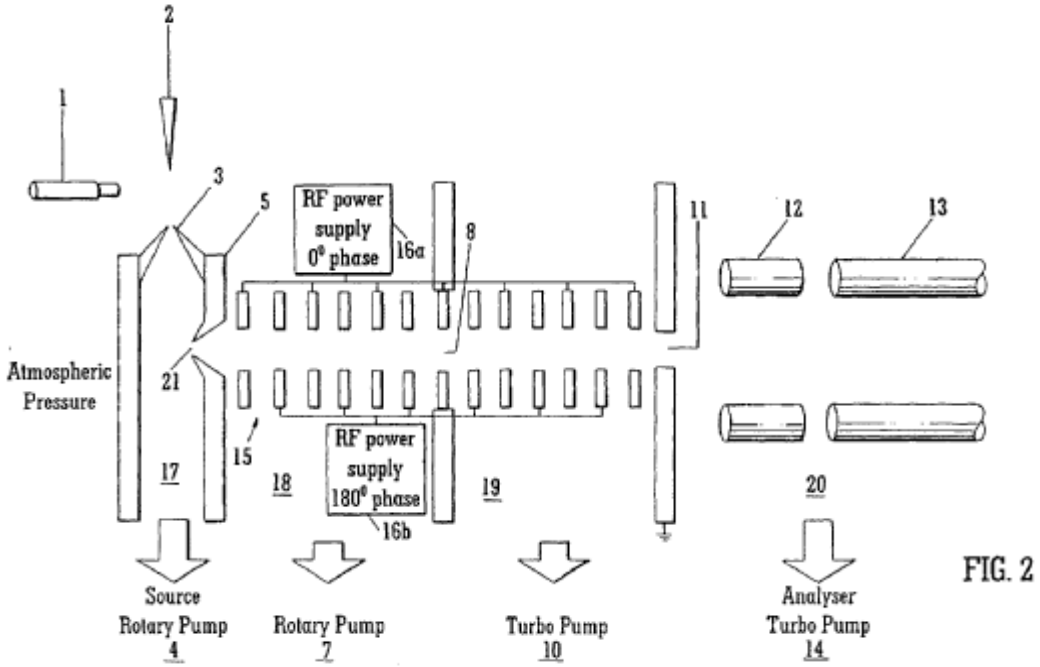

FIG. 2

H01J 49/066

{Ion funnels}

Definition statement

This place covers:

e.g. US6107628

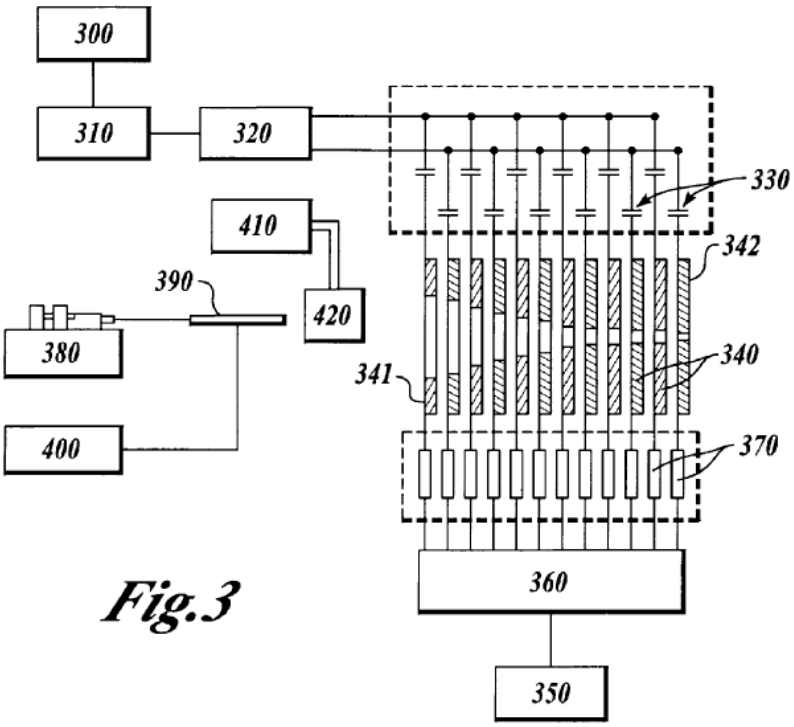

Fig.3

H01J 49/067

{Ion lenses, apertures, skimmers}

Definition statement

This place covers:

e.g. US6703610

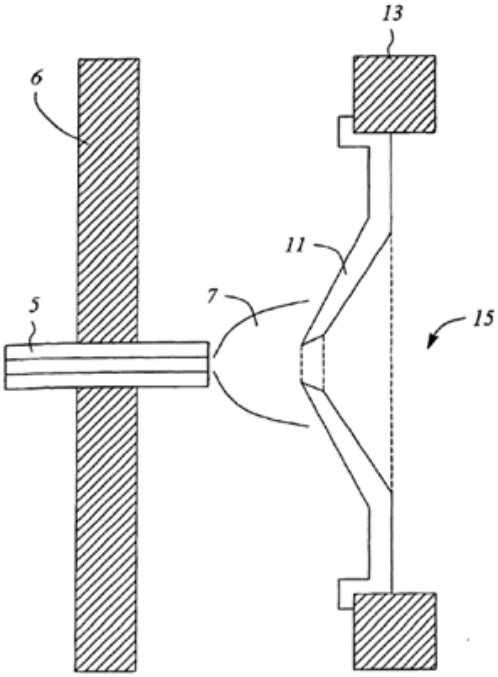

FIG. 3A

H01J 49/142

{using a solid target which is not previously vapourised}

Definition statement

This place covers:

e.g. GB2143673

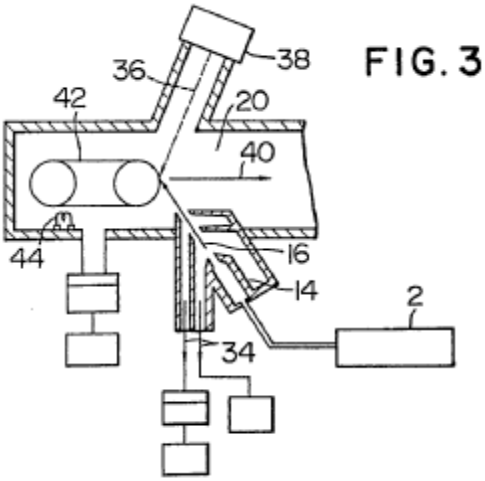

FIG. 3

H01J 49/147

{with electrons, e.g. electron impact ionisation, electron attachment (H01J 49/145 takes precedence)}

Definition statement

This place covers:

e.g. US6452167

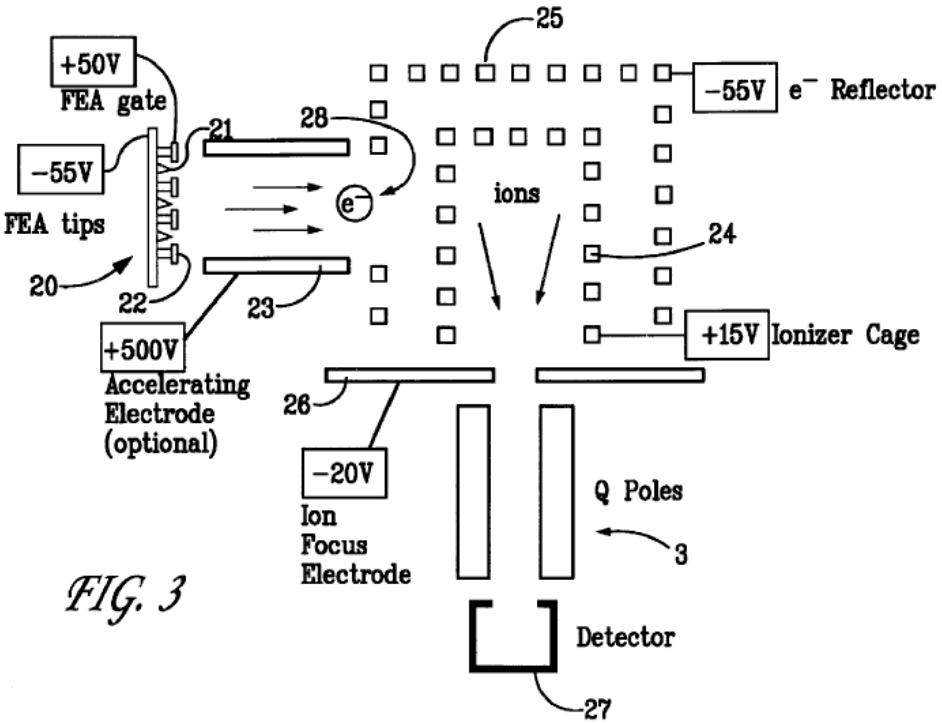

FIG. 3

H01J 49/162

{Direct photo-ionisation, e.g. single photon or multi-photon ionisation}

Definition statement

This place covers:

e.g. US5763875

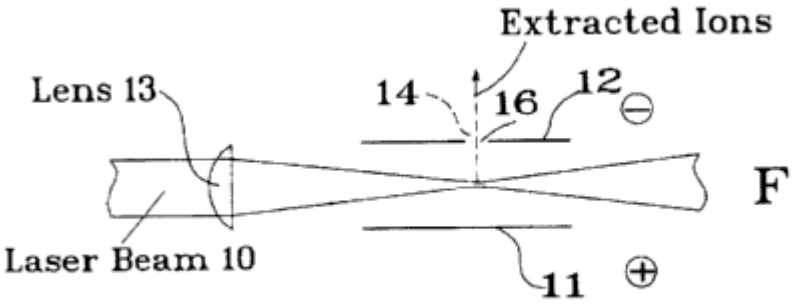

FIG. 2

H01J 49/164

{Laser desorption/ionisation, e.g. matrix-assisted laser desorption/ionisation [MALDI] (sample holders H01J 49/0418)}

Definition statement

This place covers:

e.g. WO9963576

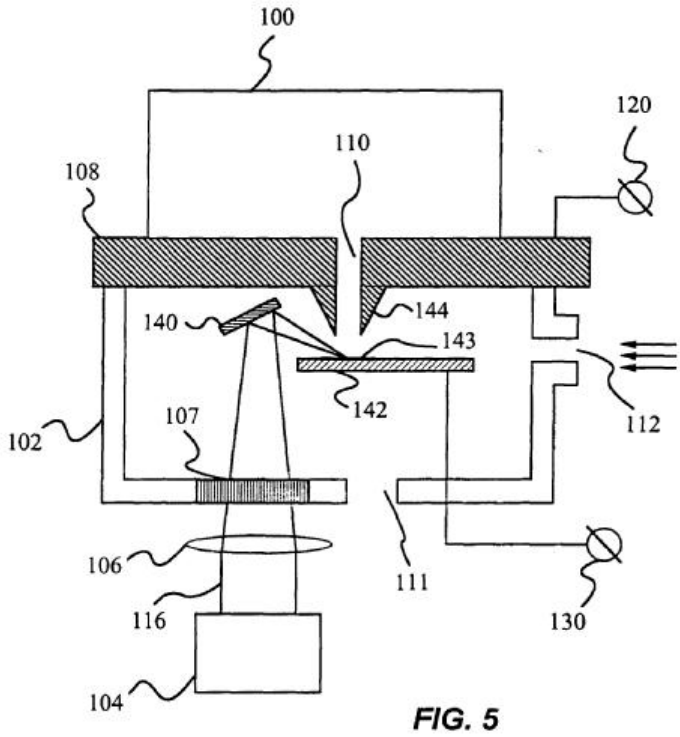

FIG. 5

H01J 49/165

{Electrospray ionisation}

Definition statement

This place covers:

e.g. EP0123552

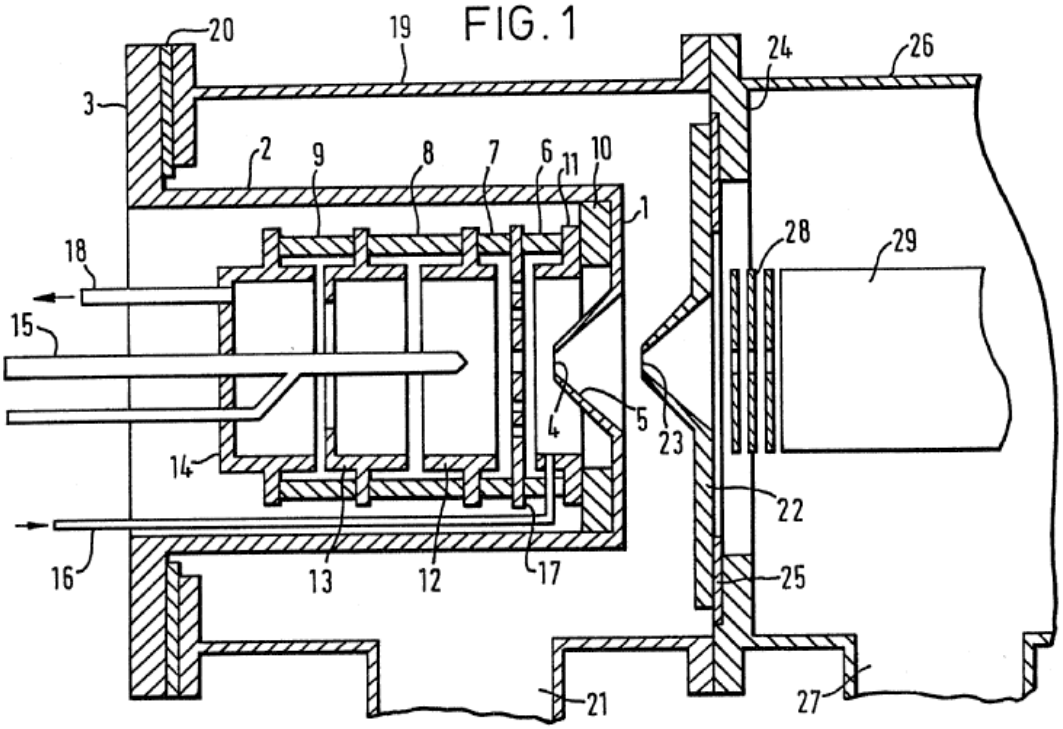

H01J 49/167

{Capillaries and nozzles specially adapted therefor; (electrostatic spraying per se B05B 5/00)}

Definition statement

This place covers:

e.g. EP0566022

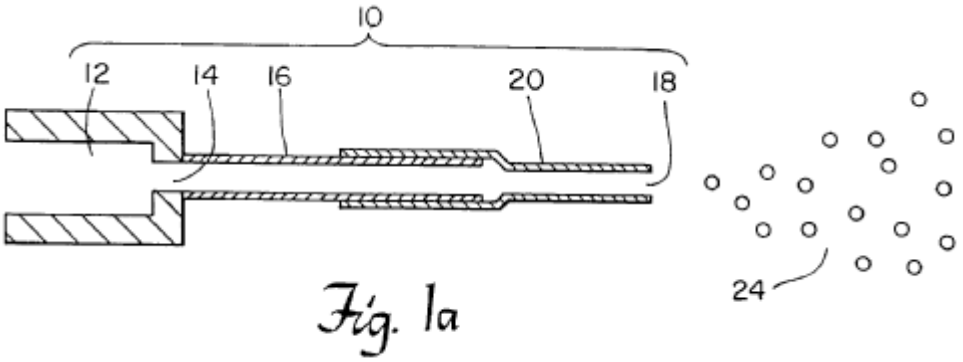

H01J 49/288

{using crossed electric and magnetic fields perpendicular to the beam, e.g. Wien filter}

Definition statement

This place covers:

e.g. US4019989

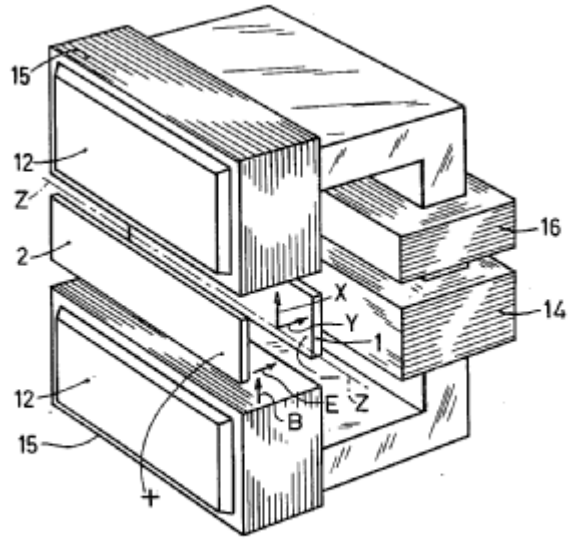

Fig. 4

H01J 49/322

{with a magnetic sector of 90 degrees, e.g. Mattauch-Herzog type}

Definition statement

This place covers:

e.g. US3622781

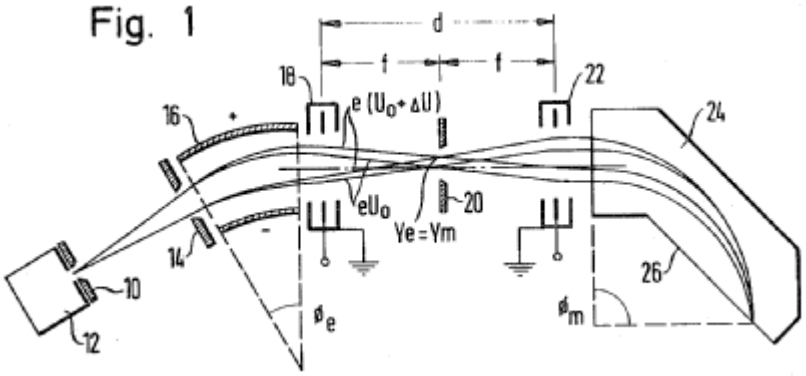

H01J 49/328

{with a cycloidal trajectory by using crossed electric and magnetic fields, e.g. trochoidal type}

Definition statement

This place covers:

e.g. US5304799

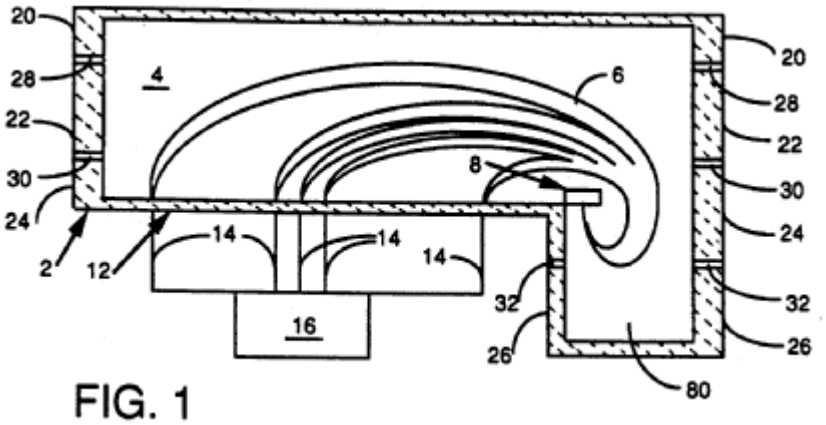

FIG. 1

H01J 49/36

Radio frequency spectrometers, e.g. Bennett-type spectrometers, Redhead-type spectrometers

Definition statement

This place covers:

e.g. US2955204

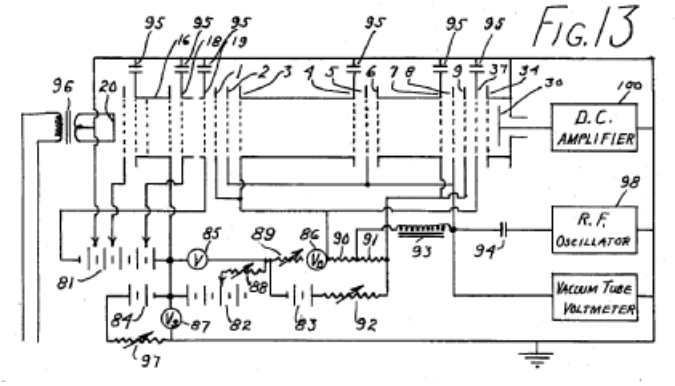

H01J 49/38

Omegatrons {Using ion cyclotron resonance}

Definition statement

This place covers:

e.g. WO03069651

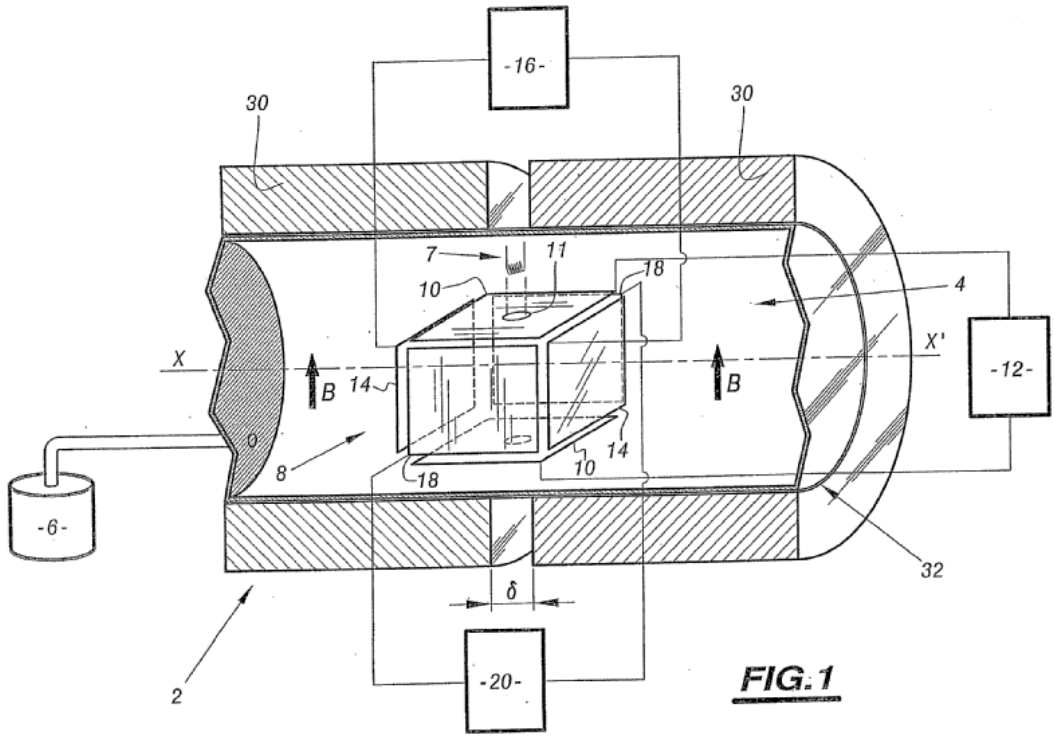

FIG.1

H01J 49/401

{characterised by orthogonal acceleration, e.g. focusing or selecting the ions, pusher electrode}

Definition statement

This place covers:

e.g. US5763878

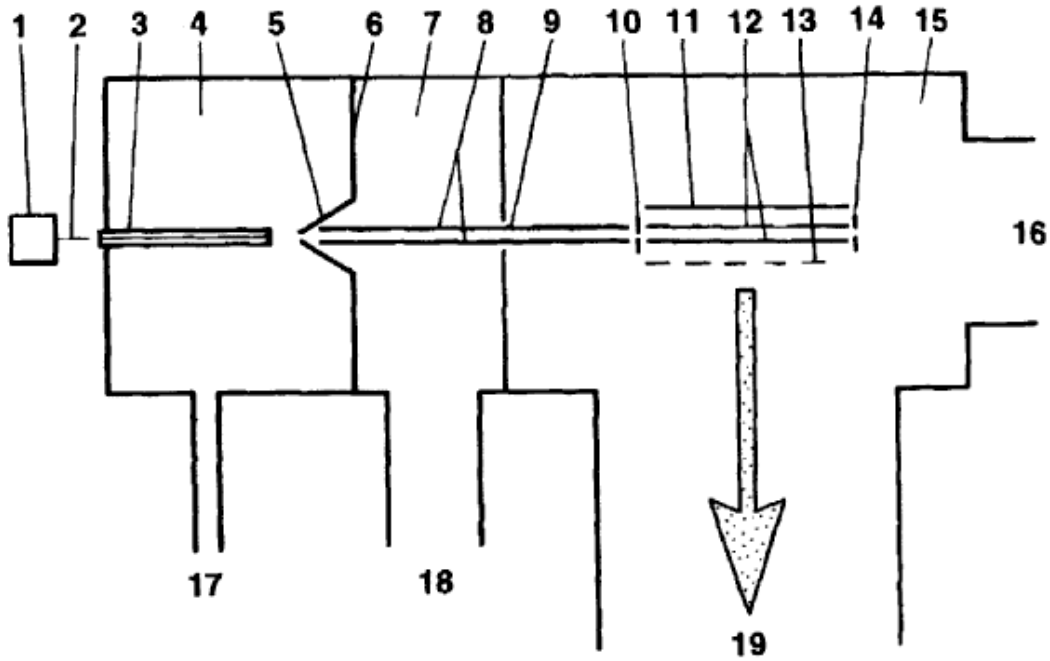

Figure 1

H01J 49/405

{characterised by the reflectron, e.g. curved field, electrode shapes}

Definition statement

This place covers:

e.g. GB2402545

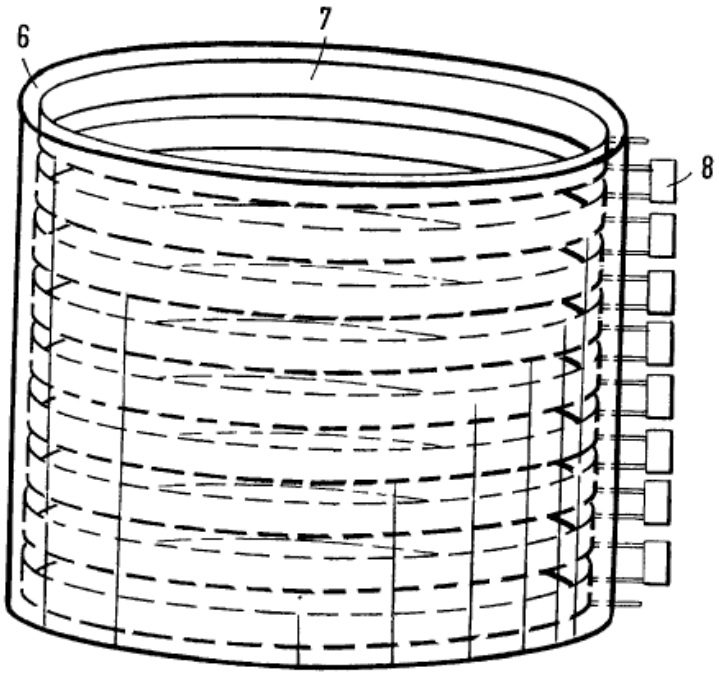

FIG. 2

H01J 49/406

{with multiple reflections (electrostatic traps H01J 49/4245)}

Definition statement

This place covers:

e.g. WO2007044696

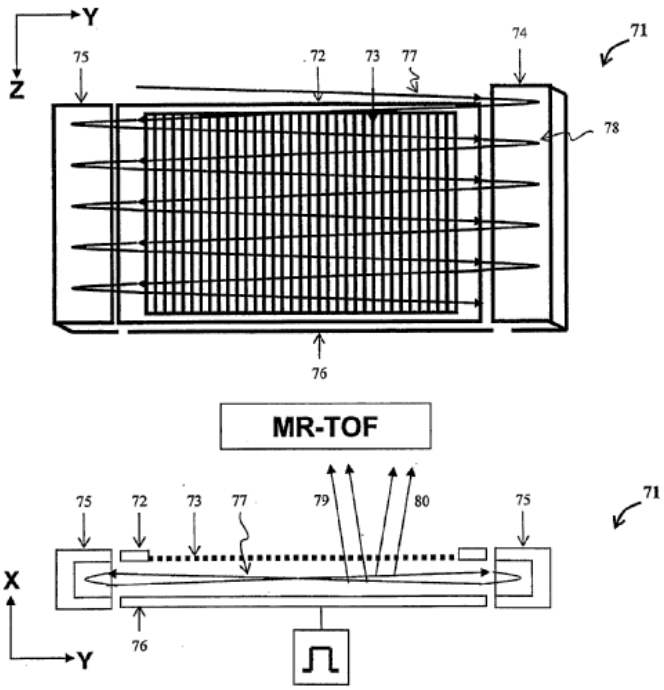

Fig.7

H01J 49/408

{with multiple changes of direction, e.g. by using electric or magnetic sectors, closed-loop time-of-flight}

Definition statement

This place covers:

e.g. US7227131

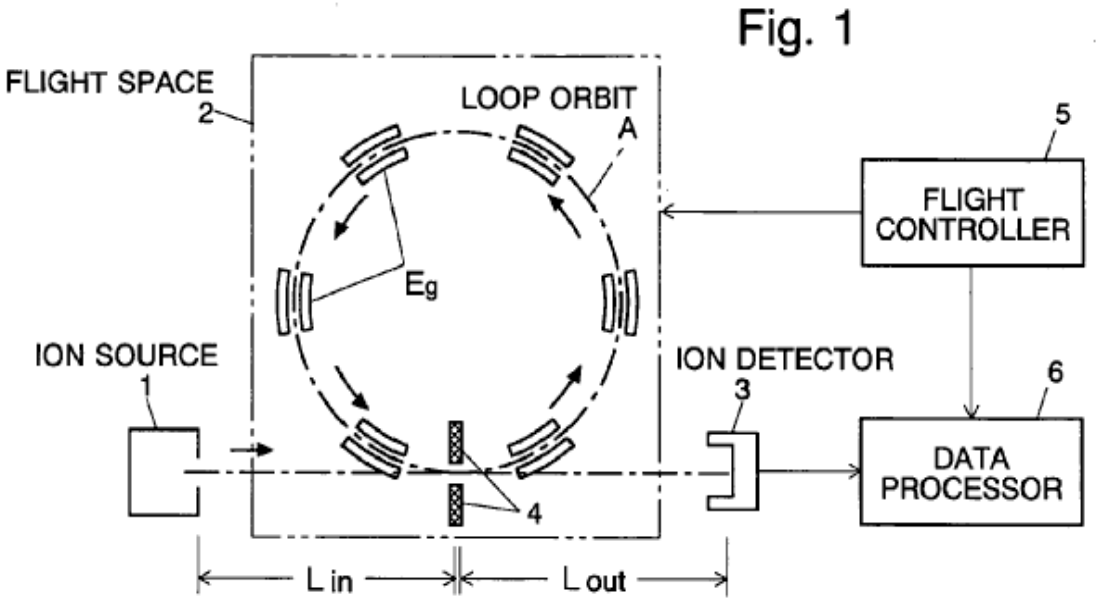

H01J 49/4215

{Quadrupole mass filters (H01J 49/4225 takes precedence)}

Definition statement

This place covers:

e.g. EP2299471

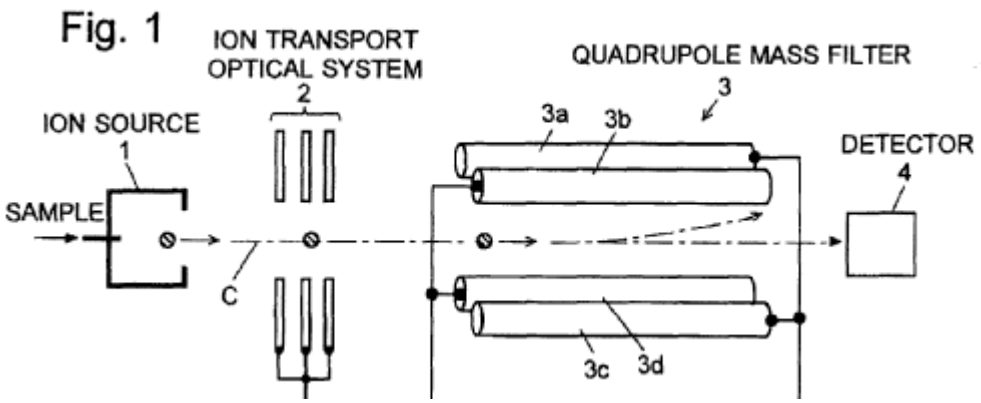

H01J 49/4225

{Multipole linear ion traps, e.g. quadrupoles, hexapoles}

Definition statement

This place covers:

e.g. WO9707530

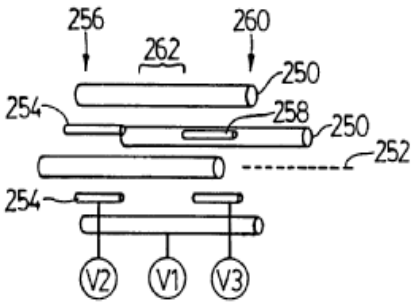

FIG. 37

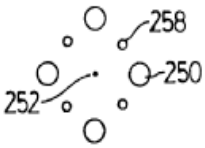

FIG. 38

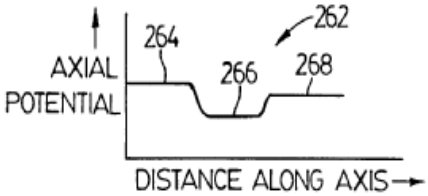

FIG. 39

H01J 49/423

{with radial ejection}

Definition statement

This place covers:

e.g. EP0684628

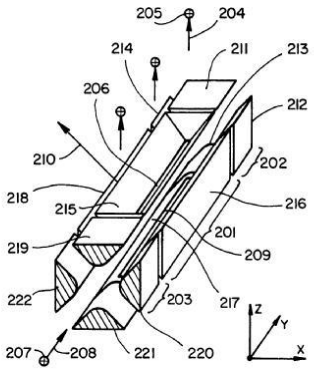

FIG_2A

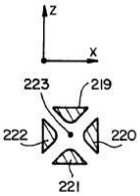

FIG_2B

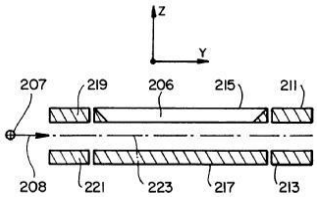

FIG_2C

H01J 49/4235

{Stacked rings or stacked plates}

Definition statement

This place covers:

e.g. WO9214259

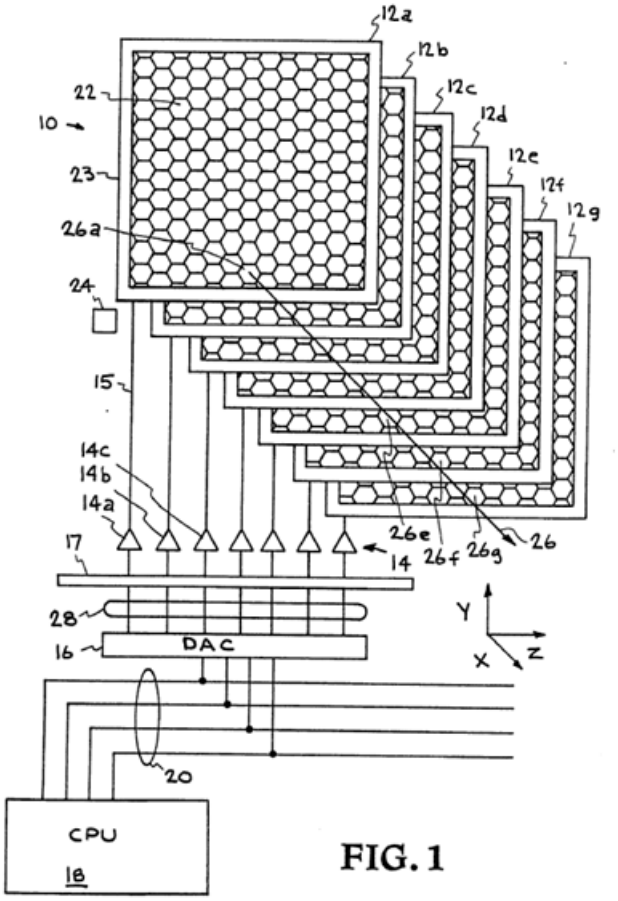

FIG. 1

H01J 49/424

{Three-dimensional ion traps, i.e. comprising end-cap and ring electrodes}

Definition statement

This place covers:

e.g. US5654542

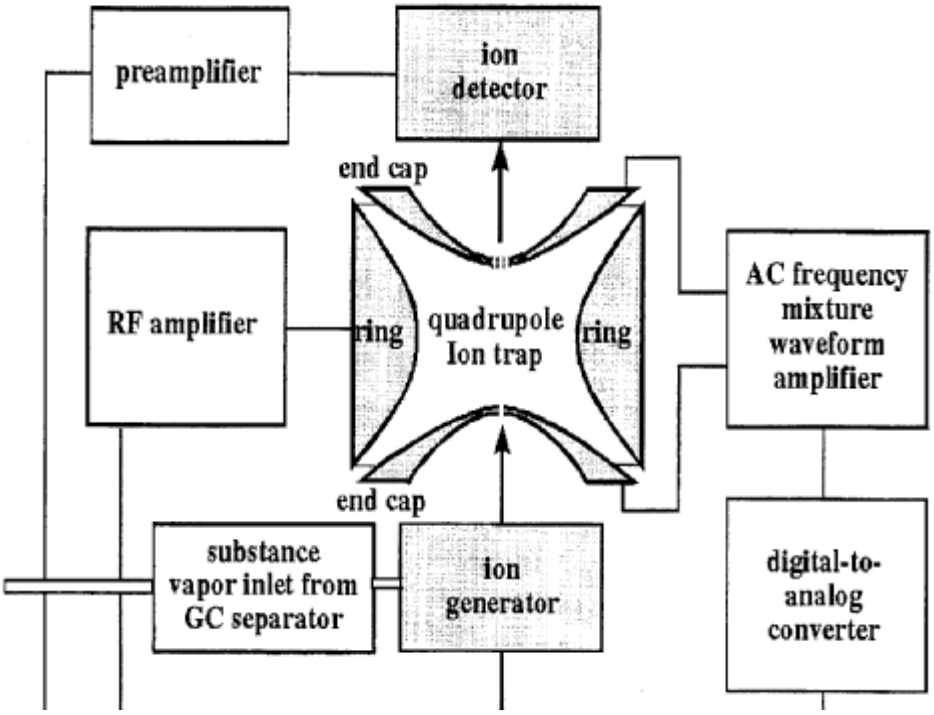

H01J 49/4245

{Electrostatic ion traps (H01J 49/422 takes precedence; multi-reflection time of flight spectrometers H01J 49/406)}

Definition statement

This place covers:

e.g. US6888130

FIG. 2

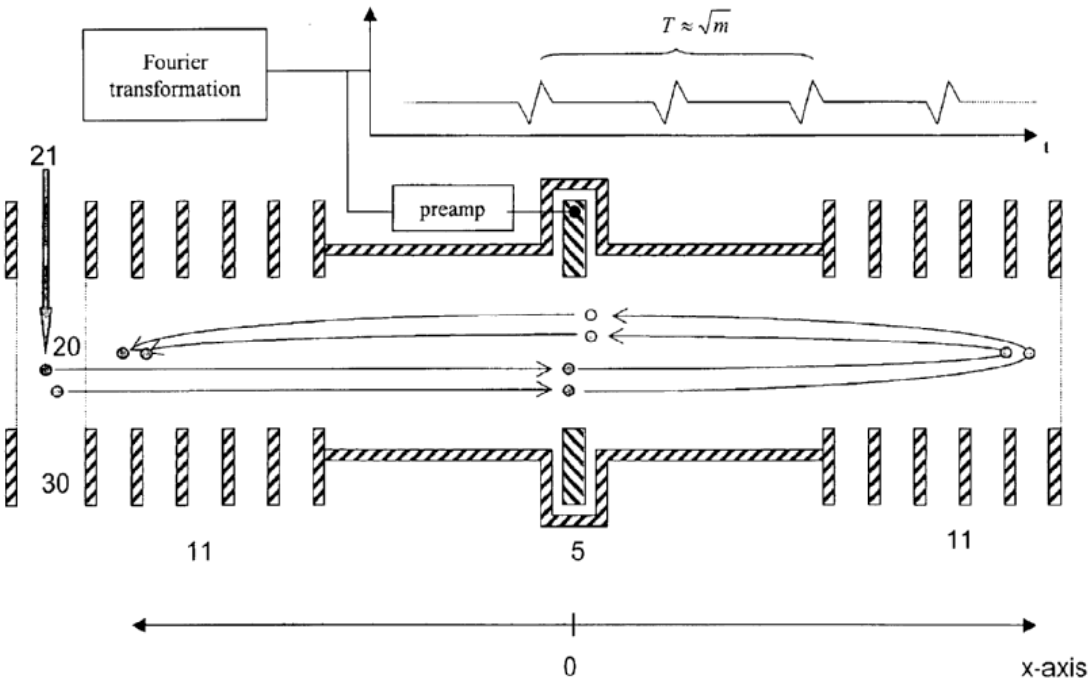

H01J 49/425

{with a logarithmic radial electric potential, e.g. orbitraps}

Definition statement

This place covers:

e.g. EP1371081

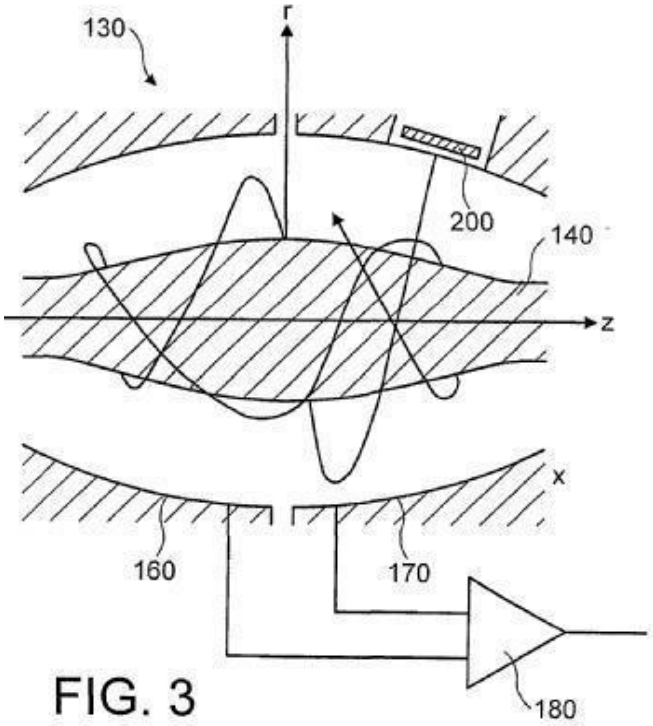

FIG. 3

H01J 61/00

Gas- or vapour-discharge lamps (use for sterilising milk products A23C; use for medical purposes A61N 5/00; use for disinfecting water C02F; use for lighting F21; {use for advertising G09F} ; circuits therefor H05B; arc lamps with consumable electrodes H05B; electro-luminescent lamps H05B)

Definition statement

This place covers:

Gas- or vapour-discharge lamps with main electrodes inside the vessel, and details thereof. In these lamps, the electrodes are not insulated from the discharge, e. g. by dielectric layers.

Examples of the discharge lamps covered here are:

- Low pressure discharge lamps, e. g. fluorescent lamps; compact fluorescent lamps;
- High pressure discharge lamps, e. g. high pressure mercury, sodium, xenon, or metal halide lamps;
- Gas filled flash lamps.

Relationships with other classification places

Lamps may further have one (or more) outer envelopes (e.g. a reflector lamp comprising an integral assembly of lamp and reflector; a discharge lamp for a vehicle headlight with an outer envelope); these are classified in H01J 61/00 as long as the lamp and outer envelope are integrally formed or

connected with each other and form one single item which can be connected to the power supply connector. The combination of a reflector comprising a lamp socket and a corresponding (replaceable) lamp is considered as a lighting system and is classified in the appropriate classes in F21V or F21S.

References

Limiting references

This place does not cover:

DC plasma displays	H01J 17/00
Cathode-ray or electron-stream lamps, a phosphor or a gas is brought to luminescence by an electron beam	H01J 63/00
Lamps without any electrode inside the vessel; Lamps with at least one main electrode outside the vessel, electrodeless lamps	H01J 65/00
Electric arc lamps with consumable electrodes	H05B 31/00
Electroluminescent light sources	H05B 33/00
Electric light sources using a combination of different types of light generation	H05B 35/00
Circuit arrangements or apparatus for igniting or operating discharge lamps	H05B 41/00
Plasma discharge EUV light sources, in which a gas is locally compressed to create a discharge space and then allowed to expand into a vacuum	H05G
X-ray radiation generated from plasma, e. g. EUV light sources	H05G 2/001

Application-oriented references

Examples of places where the subject matter of this place is covered when specially adapted, used for a particular purpose, or incorporated in a larger system:

Use of discharge lamps for sterilising milk products	A23C 3/076
Use of discharge lamps for medical purposes, medical equipment using discharge lamps, tanning devices	A61N 5/06
Non-portable lighting devices or systems thereof	F21S
Details of lighting devices, of general application	F21V

Informative references

Attention is drawn to the following places, which may be of interest for search:

Chemical, physical, or physico-chemical processes employing the direct application of incoherent waves, e. g. ultraviolet light	B01J 19/122
Use of discharge lamps for disinfecting water, disinfecting apparatus	C02F 1/32
Luminaires or lighting devices containing a lamp	F21V, F21S
Use of discharge lamps for advertising, displays using discharge lamps	G09F 9/313
Adapters and connectors	H01R 33/00

Special rules of classification

Documents should be classified in all appropriate classes, i. e. multi-aspect classification is used.

If a document concerns embodiments or elements in detail which are covered by several subgroups dependent on a higher hierarchy group, the relevant information is classified in all the respective subgroups.

The higher hierarchy group is to be used:

- if no respective subgroup exists.
- if the general idea is relevant for the higher hierarchy as well as all the respective subgroups.

Lamp details are classified in group H01J 61/02 and subgroups thereof, if the details are integral with the lamp or directly attached or applied to the lamp, so that these go with the lamp when the lamp is removed from the power supply connector.

Glossary of terms

In this place, the following terms or expressions are used with the meaning indicated:

HID lamp	High intensity discharge lamp
HPS lamp	High pressure sodium lamp
MH lamp	High pressure metal halide lamp
CFL	Compact fluorescent lamp
CCFL	Cold cathode fluorescent lamp
CRI	Colour rendering index
Lamp	a lamp comprises the discharge vessel and all peripheral accessories which makes the lamp ready for being plugged in the appropriate power supply connector, i.e. the lamp "ends" with the first suitable connector which can be connected to a standardized or another suitable power supply connector.

H01J 61/02

Details

Definition statement

This place covers:

Details of gas or vapour discharge lamps covered by H01J 61/68 - H01J 61/98 and H01J 65/00.

Optical elements have an influence on the light distribution, e.g. focusing or changing the light emission characteristic

Further information:

Details within this group particularly suited for one or more specific lamp types are additionally covered by the appropriate subgroups for the relevant lamp type(s) in H01J 61/58 - H01J 61/98 and H01J 65/00.

References

Limiting references

This place does not cover:

Lamp bases or sockets integral with the discharge lamps	H01J 5/48, H01J 5/50
Methods of manufacturing discharge lamps or discharge lamp details	H01J 9/00

Informative references

Attention is drawn to the following places, which may be of interest for search:

Details of electrodes, of magnetic control means, of screens, or of the mounting or spacing thereof, common to two or more basic types of discharge tubes or lamps	H01J 1/00
Details relating to vessels or to leading-in conductors common to two or more basic types of discharge tubes or lamps	H01J 5/00
Details of incandescent lamps	H01K 1/00

Special rules of classification

A subgroup for lamp sockets or bases is missing in H01J 61/00. These are classified in H01J 5/48 - H01J 61/62.

H01J 61/025

{Associated optical elements}

Definition statement

This place covers:

Optical elements integrally associated with the discharge lamp for influencing the spatial distribution of the emitted light:

- Refractive or reflective elements.
- Shields for production of specific dark/bright patterns.

References

Informative references

Attention is drawn to the following places, which may be of interest for search:

Optical elements, systems or apparatus	G02B
Envelopes, vessels for incandescent lamps incorporating lenses	H01K 1/30

H01J 61/04

Electrodes (for igniting H01J 61/54); Screens; Shields

References

Limiting references

This place does not cover:

Electrodes for igniting the lamp or used as starting aids	H01J 61/54

H01J 61/045

{Thermic screens or reflectors (heat-reflecting coatings on the wall of the vessel H01J 61/35)}

References

Limiting references

This place does not cover:

Heat-reflecting coatings on the wall of the vessel	H01J 61/35

H01J 61/06

Main electrodes

Definition statement

This place covers:

Main electrodes for discharge lamps of the types covered by H01J 61/58 - H01J 61/98 and in H01J 65/00.

H01J 61/073

for high-pressure discharge lamps

References

Informative references

Attention is drawn to the following places, which may be of interest for search:

Alloys based on tungsten or molybdenum	C22C 27/04

H01J 61/103

{Shields, screens or guides arranged to extend the discharge path (H01J 61/106 takes precedence)}

References

Limiting references

This place does not cover:

Means for influencing the discharge using magnetic means	H01J 61/106

H01J 61/12

Selection of substances for gas fillings; Specified operating pressure or temperature

Definition statement

This place covers:

Substances for gas fillings necessary for the operation of the discharge lamp, i. e. for

- the generation of the initial discharge,
- generating the voltage gradient,
- light emission,
- for establishing the desired spectral characteristics of the emitted light.

Gases added in small amounts, and which are not necessarily required for the operation of the lamp, are covered by the group reflecting the purpose of the gas filling, if available, otherwise in H01J 61/12.

Examples:

- Gases inside the discharge tube used for gettering or for avoiding blackening of the envelope H01J 61/26.
- Gas filled in the gap between outer envelope and discharge tube in a double-walled lamp H01J 61/34.
- Gas filled in cavities which serve as starting aid H01J 61/54.

Glossary of terms

In this place, the following terms or expressions are used with the meaning indicated:

Main constituent or principal constituent	should be construed as that filling component which is mainly responsive for the light emission. In many cases, the lamp contains a buffer gas, e.g. argon or xenon, which is necessary for initiating the discharge, but the main part of the light emission is provided for example by mercury or sodium vapour, a metal halide or other chemical substances which emits light in the conditions prevailing in the buffer gas discharge.

H01J 61/16

having helium, argon, neon, krypton, or xenon as the principle constituent

Definition statement

This place covers:

Lamps which exclusively are filled with rare gases

References

Limiting references

This place does not cover:

Low pressure mercury vapour discharge lamp	H01J 61/20

H01J 61/20

mercury vapour

References

Informative references

Attention is drawn to the following places, which may be of interest for search:

Composition of metal halide filling of metal halide lamps	H01J 61/125

H01J 61/24

Means for obtaining or maintaining the desired pressure within the vessel

References

Informative references

Attention is drawn to the following places, which may be of interest for search:

Means for maintaining the desired pressure within the vessels of two or more basic types of discharge tubes	H01J 7/14

H01J 61/26

Means for absorbing or adsorbing gas, e.g. by gettering; Means for preventing blackening of the envelope

References

Informative references

Attention is drawn to the following places, which may be of interest for search:

Means for absorbing or adsorbing gas, e.g. by gettering, common to two or more basic types of discharge tubes	H01J 7/18

H01J 61/28

Means for producing, introducing, or replenishing gas or vapour during operation of the lamp

References

Informative references

Attention is drawn to the following places, which may be of interest for search:

Means for producing, introducing, or replenishing gas or vapour during operation of two or more the lamp	H01J 7/20

H01J 61/30

Vessels; Containers

References

Informative references

Attention is drawn to the following places, which may be of interest for search:

Glass compositions	C03C
Compositions for glass with special properties	C03C 4/00
Shaped ceramic products characterised by their composition	C04B 35/00
Coatings produced by application to, or surface treatment of, optical elements, e.g. anti-reflection coatings	G02B 1/10

Details of incandescent lamps	H01K 1/00

H01J 61/32

Special longitudinal shape, e.g. for advertising purposes {(H01J 61/305 takes precedence)}

References

Limiting references

This place does not cover:

Flat vessels or containers of gas discharge lamps	H01J 61/305

H01J 61/325

{U-shaped lamps}

References

Limiting references

This place does not cover:

Compact fluorescent lamps	H01J 61/327

H01J 61/327

{"Compact"-lamps, i.e. lamps having a folded discharge path}

Definition statement

This place covers:

Fluorescent lamps with folded discharge path and with integral driving circuit, e. g. within the lamp base or socket, such that the lamp can replace incandescent lamps in common lighting fixtures

H01J 61/34

Double-wall vessels or containers

Definition statement

This place covers:

Examples:

- Discharge tubes with two or more walls.
- Lamps with a discharge tube enclosed in an outer envelope, e. g. high or low pressure discharge lamps with outer envelope.
- Reflector lamps containing a discharge tube within a closed reflector.
- Compact fluorescent lamps with outer envelope.
- Shatterproof enclosures directly mounted on the lamp, e. g. fluorescent lamps with a solid sleeve having shatterproof properties.

References

Limiting references

This place does not cover:

Lamps with open reflectors	H01J 61/045

H01J 61/35

provided with coatings on the walls thereof; Selection of materials for the coatings (using coloured coatings H01J 61/40; using luminescent coatings H01J 61/42)

Definition statement

This place covers:

Coatings on the walls of discharge lamps.

Examples:

- Coatings on the walls of discharge tubes or of the outer envelope of double-walled lamps covered by H01J 61/34.
- Heat or UV-reflective coatings.
- Protective coatings.
- Shatterproof coatings applied to the external surface of the discharge lamp, e. g. by extrusion so as to directly adhere to the discharge tube.

References

Limiting references

This place does not cover:

Coloured coatings in or on the envelope	H01J 61/40
Devices for influencing the colour or wavelength of the light by transforming the wavelength of the light by luminescence	H01J 61/42

Informative references

Attention is drawn to the following places, which may be of interest for search:

Envelopes, vessels of incandescent lamps provided with coatings on the walls	H01K 1/32

H01J 61/38

Devices for influencing the colour or wavelength of the light

Definition statement

This place covers:

Light filters, coatings for influencing the wavelength or the colour of the emitted light, reflective or light diffusing coatings

References

Limiting references

This place does not cover:

Devices for influencing the colour or wavelength of the light may be applied on the surface or the discharge tube or on the surfaces of outer envelopes of the lamps	H01J 61/34.

Special rules of classification

Non-chemical aspects of luminescent materials are covered by H01J 2261/385 , Examples:

Variable thickness profile of layers of luminescent material.

Spatial distribution of luminescent material on lamp surfaces.

H01J 61/42

by transforming the wavelength of the light by luminescence

Definition statement

This place covers:

Devices for transforming the wavelength of the light by luminescence:

Phosphor coatings characterized by non-chemical parameters, e.g. thickness profile, geometrical characteristics of the phosphor distribution on the vessel surface

H01J 61/52

Cooling arrangements; Heating arrangements; Means for circulating gas or vapour within the discharge space {(heating or cooling arrangements to promote ionisation for starting H01J 61/54)}

Definition statement

This place covers:

Means for cooling specific parts of discharge tube in the form of ribs or other structures integrally formed on or directly attached to the vessel in order to increase the surface of the vessel

References

Limiting references

This place does not cover:

Heating or cooling arrangements to promote ionisation for starting	H01J 61/54

Informative references

Attention is drawn to the following places, which may be of interest for search:

Arrangement of a lamp and an external cooling fan	F21V 29/00

H01J 61/56

One or more circuit elements structurally associated with the lamp

Definition statement

This place covers:

- One or more circuit elements structurally associated with the lamp, the circuit elements must be structurally associated with the lamp. Many compact fluorescent lamps are characterized by an electronic ballast contained in the lamp base.
- Specific arrangements of the components in the lamp base

References

Informative references

Attention is drawn to the following places, which may be of interest for search:

Electronic ballasts or driving circuits per se	H05B 41/00

H01J 61/64

Cathode glow lamps (designed as tuning or voltage indicators H01J 17/40)

References

Limiting references

This place does not cover:

Cathode glow lamps designed as tuning or voltage indicators	H01J 17/40

H01J 61/66

having one or more specially shaped cathodes, e.g. for advertising purposes {alphanumeric}

Definition statement

This place covers:

Discharge lamps having one or more specially shaped cathodes

Examples:

- for advertising purposes,
- for displaying alphanumeric characters.

H01J 61/72

having a main light-emitting filling of easily vaporisable metal vapour, e.g. mercury

Definition statement

This place covers:

Lamps with low-pressure unconstricted discharge.

Special rules of classification

The cold pressure limit <400 Torr is disregarded.

A fluorescent lamp containing a specific xenon-argon mix as buffer gas, mercury, and a specific phosphor mix with a specific mass density yields a power saving lamp with a higher lumen output per foot arc length should be classified in H01J 61/72. Nevertheless, the document should also be given the group symbols H01J 61/20 and H01J 61/44.

H01J 61/82

Lamps with high-pressure unconstricted discharge {having a cold pressure > 400 Torr}

Definition statement

This place covers:

Lamps with high-pressure unconstricted discharge.

Special rules of classification

The cold pressure limit >400 Torr is disregarded.

H01J 61/92

Lamps with more than one main discharge path

Definition statement

This place covers:

- Lamps with different discharge paths
- Lamps with one discharge vessel with a plurality of electrode pairs which form a plurality of discharge paths; these can be separated from each other by walls.
- Arrays of single path discharge lamps, if the array is contained in one common container which provides electrical connection to all single lamps. An example is an array of single fluorescent tubes in a parallel arrangement in a LCD backlight.

References

Limiting references

This place does not cover:

Incandescent lamps with a filament heated only by non-luminous discharge	H01K 11/00

H01J 61/96

Lamps with light-emitting discharge path and separately-heated incandescent body within a common envelope, e.g. for simulating daylight (lamps with filament heated only by non-luminous discharge H01K)

References

Limiting references

This place does not cover:

Incandescent lamps with a filament heated only by non-luminous discharge	H01K 11/00

H01J 63/00

Cathode-ray or electron-stream lamps (flying-spot tubes H01J 31/10; magic-eye tuning indicators H01J 31/14; lamps with incandescent body heated by the ray or stream H01K {see also H01J 29/00})

Definition statement

This place covers:

Lamps and details of lamps in which an electron beam excites a luminescent material or a gas to emit light:

- Lamps in which an electron beam strikes a phosphor and excites the phosphor to luminescence
- Lamps in which an electron beam excites a gas to luminescence

Further information:

Details of cathode ray lamps which are also mentioned in a document to be suitable for a display tube are also covered by H01J 29/00 and H01J 31/00.

References

Limiting references

This place does not cover:

Flying-spot tubes	H01J 31/10
Magic-eye tuning indicators	H01J 31/14
Lamps with incandescent body heated by the ray or stream	H01K 11/00

Informative references

Attention is drawn to the following places, which may be of interest for search:

Field emissive cathodes	H01J 1/304
Electron guns using field emission	H01J 3/021
Methods for manufacturing details of cathode ray or electron stream lamps	H01J 9/00
Details of display tubes	H01J 29/00
Display tubes	H01J 31/00

H01J 63/02

Details, e.g. electrode, gas filling, shape of vessel

References

Informative references

Attention is drawn to the following places, which may be of interest for search:

Field emission displays	H01J 31/123

H01J 63/06

Lamps with luminescent screen excited by the ray or stream

References

Informative references

Attention is drawn to the following places, which may be of interest for search:

Field emission displays	H01J 31/123

Special rules of classification

The more recent lamps which are classified in H01J 63/06 are structurally very similar or identical to field emission displays (H01J 31/123). In order to be classified in H01J 63/06, the document should state or strongly imply the use as a lamp, e.g. a backlight for an LCD display - it is not sufficient that the document refer to a "light emitting element" or use a similar term which also would be applicable to a single pixel or to a whole field emitter display (FED). If both uses (FED and lamp) are mentioned, the document is classified in both subclasses

H01J 65/00

Lamps without any electrode inside the vessel; Lamps with at least one main electrode outside the vessel

Definition statement

This place covers:

Lamps without any electrode inside the vessel and electrodeless lamps, and details thereof:

- Microwave excited lamps in which the discharge tube is located in a microwave cavity
- Inductively coupled RF lamps in which the discharge tube is surrounded by an RF coil or antenna
- Lamps with external electrodes only
- Lamps with at least one main electrode outside the vessel
- Lamps in which the main electrodes are inside the vessel, but are separated from the discharge by a dielectric layer
- Lamps with a gas filling excited by internal or external corpuscular radiation

References

Limiting references

This place does not cover:

Plasma displays	H01J 11/00

Indicating arrangements for variable information in which the desired character or characters are formed by combining individual elements being gas discharge devices	G09F 9/313
Circuit arrangements or apparatus for igniting or operating discharge lamps	H05B 41/00

Informative references

Attention is drawn to the following places, which may be of interest for search:

Details of the lamps covered by H01J 65/00 are covered by the appropriate subgroup for lamp types in H01J 65/00 and, if available, also by the appropriate detail subgroups in H01J 61/00.

Main electrodes	H01J 61/06
Substances for gas fillings	H01J 61/12
Material of the discharge tubes	H01J 61/302
Ignition aids	H01J 61/54

Special rules of classification

Means for coupling electromagnetic energy into the discharge tube are considered as a part of the lamp:

- Microwave or RF cavities, resonators, and waveguides in which the discharge tube is arranged
- RF coils or antennae surrounding or adjacent discharge tube

H01J 65/08

Lamps in which a screen or coating is excited to luminesce by radioactive material located inside the vessel {(direct conversion of radiation energy from radioactive sources into light G21H 3/02)}

Definition statement

This place covers:

Lamps in which a screen or coating is excited to luminesce by radioactive material located inside the vessel.

References

Limiting references

This place does not cover:

Direct conversion of radiation energy from radioactive sources into light	G21H 3/02

H01J 2235/082

Fluids, e.g. liquids, gases

Definition statement

This place covers:

Targets which are in fluid state, including targets intended to melt during operation of the X-ray tube.

H01J 2235/087

Transmission type

Definition statement

This place covers:

Anodes producing X-rays of which the fraction passing through the anode is suitable to be used.

References

Limiting references

This place does not cover:

Anodes which serve as vacuum window or are integrally attached to the vacuum window	H01J 2235/186

H01J 2235/088

Laminated targets, e.g. plurality of emitting layers of unique or differing materials

Definition statement

This place covers:

Targets made of more than one layer of material intended to emit X-rays.

References

Limiting references

This place does not cover:

Targets with layered structure including a single emissive layer, the other layers serving to improve the mechanical properties, the thermal properties.	H01J 2235/084

H01J 2235/1266

flow being via moving conduit or shaft

Definition statement

This place covers:

Examples:

Rotating, hollow anodes cooled by water passed along the axis,

Cooling conduits that must be rotated during operation

H01J 2235/162

Rotation

Definition statement

This place covers:

Example:

Rotating the vessel for positioning purposes

References

Limiting references

This place does not cover:

Rotation of X-ray vessel where vessel is fixedly joint to anode in order to spread the heat e.g. Straton tube:	H01J 35/305

H01J 2235/168

against charged particles

Definition statement

This place covers:

Shielding of X-ray vessels or other components of the tube e.g. against charged particles such as scattered or secondary electrons. Examples:

corona shields;

magnetic fields for shielding;

conductive layers

H01J 2235/18

Windows, e.g. for X-ray transmission

Definition statement

This place covers:

Structures transparent to x-rays but separating a space of certain properties e. g. ambient pressure from a space having different respective properties e. g. low pressure; including windows acting as target anodes.

H01J 2235/186

used as target or X-ray converter, e.g. transmission type

Definition statement

This place covers:

X-ray transparent windows used as target or targets integrally attached to a window and used in transmission mode

References

Limiting references

This place does not cover:

Transmission type target anodes not providing vacuum sealing	H01J 2235/087

H01J 2237/00

Discharge tubes exposing object to beam, e.g. for analysis treatment, etching, imaging

Definition statement

This place covers:

Further information:

The codes in this main group are grouped according to the following principle:

details common to gas or plasma discharge of the above mentioned tubes:
H01J 2237/00 - H01J 2237/2487

imaging

or analysing: H01J 2237/25 - H01J 2237/2857

particlebeam processing: H01J 2237/30 - H01J 2237/31747

plasma processing: H01J 2237/32 - H01J 2237/339

Codes in the scheme H01J 2237/00 and subgroups are usually marked with the month of their creation ([Nyymm] means "new in month mm of year yy") and are generally not reclassified. These codes are thus are not complete, i.e. not all documents classified in subgroups of H01J 37/00, for which a respective code in subgroups of H01J 2237/00 would be adequate, have such a code.

Special rules of classification

All limiting references or precedence rules within H01J 2237/00 and subgroups thereof apply only within H01J 2237/00 (and subgroups thereof) and in particular not in view of groups the scheme H01J 37/00 and subgroups thereof, if not a group in H01J 37/00 or below is explicitly referred to.

General Reminder:

For features of general interest which may be found in other types of discharge tubes, an indexing-code corresponding to general schemes H01J 2201/00 - **H01J207/00** is given, e.g. for cathodes, vessels, cooling means or the like.

Same rules apply for manufacturing procedures (H01J 2209/00), unless really specific to the tube concerned.

H01J 2237/002

Cooling arrangements (of objects being observed or treated H01J 2237/2001)

References

Limiting references

This place does not cover:

Cooling arrangements of objects being observed or treated	H01J 2237/2001

H01J 2237/006

Details of gas supplies, e.g. in an ion source, to a beam line, to a specimen or to a workpiece, (H01J 37/3244 takes precedence; environmental cells for electron microscopes H01J 2237/2003; microscopes with environmental specimen chamber H01J 2237/2608)

References

Limiting references

This place does not cover:

Gas supply means for processing objects by plasma generation	H01J 37/3244

Informative references

Attention is drawn to the following places, which may be of interest for search:

Environmental cells for electron microscopes	H01J 2237/2003
Microscopes with environmental specimen chamber	H01J 2237/2608

H01J 2237/024

Moving components not otherwise provided for (diaphragms H01J 2237/0458; objects H01J 2237/202)

References

Limiting references

This place does not cover:

Moving components for diaphragms	H01J 2237/0458
Moving components for objects	H01J 2237/202

H01J 2237/026

Shields

Definition statement

This place covers:

Shields - both shielding the beam from influence thereon and shielding the environment from influence due to the tube

H01J 2237/0492

Lens systems (individual lenses H01J 2237/10)

References

Limiting references

This place does not cover:

Individual lenses	H01J 2237/10

H01J 2237/05

Arrangements for energy or mass analysis

Glossary of terms

In this place, the following terms or expressions are used with the meaning indicated:

analysis in H01J 2237/05 and subgroups relates to forming a spectrum; filtering relates to selecting mass or energy of (one) particular value(s)

H01J 2237/065

Source emittance characteristics

References

Limiting references

This place does not cover:

Beam diagnostics anywhere in beam	H01J 2237/24514

Further information:

Diagnostics only for the source

H01J 2237/08

Ion sources

References

Limiting references

This place does not cover:

Ion sources for mass spectrometers	H01J 49/10

H01J 2237/0805

Liquid metal sources

Synonyms and Keywords

common acronym: LMIS

H01J 2237/0807

Gas field ion sources [GFIS]

Synonyms and Keywords

common acronym: GFIS

H01J 2237/0812

Ionized cluster beam [ICB] sources

Definition statement

This place covers:

gas cluster ion beam sources and other cluster beam ion sources (cluster in this respect means a group of similar atoms or molecules)

Synonyms and Keywords

acronym for gas cluster ion beam : GCIB

H01J 2237/141

Coils (superconducting H01J 2237/142)

References

Limiting references

This place does not cover:

Superconducting coils	H01J 2237/142

H01J 2237/1505

Rotating beam around optical axis

Definition statement

This place covers:

Example:

What is called "scan rotation" in SEMs

H01J 2237/16

Vessels (liner tubes H01J 2237/0268)

References

Limiting references

This place does not cover:

Liner tubes	H01J 2237/0268

H01J 2237/182

Obtaining or maintaining desired pressure

Definition statement

This place covers:

Both means and methods

H01J 2237/188

Differential pressure

Definition statement

This place covers:

Example:

Also specific arrangements for differential pressure of field emission guns

H01J 2237/2001

Maintaining constant desired temperature

Definition statement

This place covers:

Both heating and/or cooling

H01J 2237/2002

Controlling environment of sample

Definition statement

This place covers:

Controlling the environment of the sample in view of e.g. gas pressure, specific types of gases or gas composition, etc.

References

Informative references

Attention is drawn to the following places, which may be of interest for search:

Elevated pressure	H01J 2237/2605

Environmental microscopes	H01J 2237/2608

H01J 2237/2006

Vacuum seals

Definition statement

This place covers:

Vacuum seals associated with the stage, e.g. seals for adjustment screws of the sample stage

H01J 2237/20242

Eucentric movement

Definition statement

This place covers:

Moving the sample such that it stays in focus

H01J 2237/20271

Temperature responsive devices

Definition statement

This place covers:

Example:

Temperature dilation of positioning element used to move sample

H01J 2237/204

Means for introducing and/or outputting objects (locks H01J 2237/184)

References

Limiting references

This place does not cover:

Vacuum locks	H01J 2237/184

H01J 2237/2065

Temperature variations (maintaining constant desired temperature H01J 2237/2001)

References

Limiting references

This place does not cover:

Maintaining constant desired temperature	H01J 2237/2001

H01J 2237/2067

Surface alteration

Definition statement

This place covers:

Surface alteration of samples to be analysed or inspected, e.g. ion bombardment to modify sample surface in an SEM

References

Limiting references

This place does not cover:

Processing of objects per se	H01J 2237/30

H01J 2237/21

Focus adjustment (lenses H01J 2237/10)

References

Limiting references

This place does not cover:

Lenses	H01J 2237/10

H01J 2237/22

Treatment of data (mixing signals H01J 2237/24495)

References

Limiting references

This place does not cover:

Mixing signals	H01J 2237/24495
Image processing as such	G06T

H01J 2237/228

Charged particle holography

References

Informative references

Attention is drawn to the following places, which may be of interest for search:

Electron or ion microscopes for holography	H01J 2237/2614
Holographic processes or apparatus using particles or using waves	G03H 5/00

H01J 2237/24507

Intensity, dose or other characteristics of particle beams or electromagnetic radiation

References

Limiting references

This place does not cover:

Beam diagnostics including respective control	H01J 2237/24514

H01J 2237/24514

Beam diagnostics including control of the parameter or property diagnosed (H01J 2237/30472 takes precedence)

References

Limiting references

This place does not cover:

Controlling the beam in electron or ion beam tubes for processing objects	H01J 2237/30472

H01J 2237/24528

Direction of beam or parts thereof in view of the optical axis, e.g. beam angle, angular distribution, beam divergence, beam convergence or beam landing angle on sample or workpiece (means for deflecting or directing discharge H01J 2237/15)

References

Informative references

Attention is drawn to the following places, which may be of interest for search:

Means for deflecting or directing discharge	H01J 2237/15

H01J 2237/24564

Measurements of electric or magnetic variables, e.g. voltage, current, frequency

Definition statement

This place covers:

Example:

Voltage contrast, charging of sample, leakage current in sample to sample holder, magnetic imaging of sample

References

Informative references

Attention is drawn to the following places, which may be of interest for search:

When related to the tube	H01J 2237/2594

H01J 2237/2482

Optical means

Definition statement

This place covers:

Example:

Focus control by additional light-optical microscopes

H01J 2237/2583

using tunnel effects, e.g. STM, AFM

Definition statement

This place covers:

Microprobes using tunnel effect only in combination with tubes of H01J 37/00, e.g. LEED or RHEED in combination with STM

References

Limiting references

This place does not cover:

STM, AFM, etc. per se	G01Q

H01J 2237/2608

with environmental specimen chamber (environmental cells H01J 2237/2003)

References

Limiting references

This place does not cover:

Environmental cells	H01J 2237/2003

H01J 2237/2614

Holography or phase contrast, phase related imaging in general, e.g. phase plates

References

Limiting references

This place does not cover:

Treatment of data	H01J 2237/228

Informative references

Attention is drawn to the following places, which may be of interest for search:

Holographic processes or apparatus using particles	G03H 5/00

H01J 2237/2617

Comparison or superposition of transmission images; Moiré

Definition statement

This place covers:

Example:

Methods for image compare

H01J 2237/2826

Calibration (for object processing apparatus H01J 2237/30433)

References

Limiting references

This place does not cover:

Calibration for object processing apparatus	H01J 2237/30433

H01J 2237/30433

System calibration (for microscopes H01J 2237/2826)

References

Limiting references

This place does not cover:

System calibration for microscopes	H01J 2237/2826

H01J 2237/3045

Deflection calibration (deflecting in general H01J 2237/15; specific to material treating H01J 2237/30483)

References

Limiting references

This place does not cover:

Deflection calibration specific to material treating	H01J 2237/30483

Informative references

Attention is drawn to the following places, which may be of interest for search:

Deflecting in general	H01J 2237/15

H01J 2237/30466

Detecting endpoint of process (for plasma apparatus H01J 37/32963, for sputtering apparatus H01J 37/3479)

References

Limiting references

This place does not cover:

Detecting endpoint of process for plasma apparatus	H01J 37/32963
Detecting endpoint of process for plasma apparatus, for sputtering apparatus	H01J 37/3479

H01J 2237/31705

Impurity or contaminant control

Definition statement

This place covers:

Control of contamination stemming from the ion source or beam line

H01J 2237/31732

Depositing thin layers on selected microareas (ion plating H01J 2237/3142)

References

Limiting references

This place does not cover:

Ion plating	H01J 2237/3142