G01N

INVESTIGATING OR ANALYSING MATERIALS BY DETERMINING THEIR CHEMICAL OR PHYSICAL PROPERTIES (measuring or testing processes other than immunoassay, involving enzymes or microorganisms C12M, C12Q)

Definition statement

This place covers:

The scope of the subclass G01N is so broad that a detailed description of the subject matter appropriate for this place is correctly possible only at the main-group level, e.g. G01N 21/00.

Provisions that are valid at a general level (e.g. of a kind appropriate to more than one of the main groups) are provided in the sections that follow.

The user is otherwise referred to the IPC definitions for the individual main groups of G01N which follow hereinafter. The following list is intended to assist the user.

Investigating or analysing with emphasis to the properties investigated:

- Mechanical strength: G01N 3/00
- Density, specific gravity: G01N 9/00
- Flow, viscosity, plasticity: G01N 11/00
- Surface, boundary or diffusion effects: G01N 13/00
- Characteristics of particles and porous materials: G01N 15/00
- Resistance to weather, to corrosion, or to light: G01N 17/00
- Friction, adhesive force: G01N 19/00

Investigating or analysing with emphasis to the methods or means used

- Mechanical stress: G01N 3/00
- Weighing: G01N 5/00
- Measuring pressure or volume of gas: G01N 7/00
- Scanning-probe techniques: G01N 13/00
- Mechanical: G01N 19/00
- Optical: G01N 21/00
- Magnetic resonance, spin effects: G01N 24/00
- Microwaves: G01N 22/00
- Other wave or particle radiation: G01N 23/00
- Thermal: G01N 25/00
- Electric, electrochemical, magnetic: G01N 27/00
- Ultrasonic, Sonic or Infrasonic: G01N 29/00
- Separation into components: G01N 30/00
- Chemical means for non-biological materials: G01N 31/00
- Chemical means for biological materials: G01N 33/50
- Immunological testing: G01N 33/50
- Other specific methods: G01N 33/00

Others

- Sampling, preparing: G01N 1/00
- Specific materials: G01N 33/00
- Automatic analysis: G01N 35/00
- Details: G01N 37/00

To further support the user in consulting the main groups of this subclass, the following table summarizes the properties of the electromagnetic spectrum together with the relevant main group of this subclass.

Electromagnetic spectrum Main group

Radiation Wavelength (m) Frequency (Hz) Energy (eV)

Gamma ray < 0.02 nm > 15 EHz > 62.1 keV G01N 23/00

X-ray 0.01 nm–10 nm 30 EHz–30 PHz 124 keV–24 eV G01N 23/00

Extreme Ultraviolet 10 nm–100 nm 30 PHz–3 PHz 124 eV–12.4 eV G01N 23/00

Ultraviolet 100 nm–390 nm 3 PHz–770 THz 12.4 eV–3.2 eV G01N 21/00

Visible light 390 nm–750 nm 770 THz–400 THz 3.2 eV–1.7 eV G01N 21/00

Infrared 750 nm–1mm 400 THz–300 GHz 1.7 eV–1.24 meV G01N 21/00

Sub-millimetre wave (i.e. terahertz wave; waveband within Infrared) 100 µm–1 mm 3 THz–300 GHz 12.4 meV–1.24 meV G01N 21/00

Millimetre wave (waveband within Microwave) 1 mm – 10 mm 300 GHz–30 GHz 1.24 meV–124 µeV G01N 22/00

Microwave 1 mm – 1 m 300 GHz–300 MHz 1.24 meV–1.24 µeV G01N 22/00

Radio 1 m–100 km 300 MHz–3 kHz 1.24 µeV–12.4 peV G01N 22/00

Relationships with other classification places

Apparatus fully provided for in a single other subclass, see the relevant subclass, e.g. chemical or physical apparatus for general laboratory use, which is covered by B01L.

Analysis as an integrated step of a process should be classified with the process, insofar as the process is fully provided for in another subclass. For example, analysis of water as integrated step of water treatment process is classified in subclass C02F.

Sensing humidity changes for compensating measurements of other variables or for compensating readings of instruments for variations in humidity, see G01D or the relevant subclass for the variable measured.

Testing or determining the properties of structures, e.g. apparatus, machine parts etc, is classified in the relevant subclass for the structure being tested, as opposed to investigating, i.e. testing or determining (see Glossary), the properties of material samples, which is classified in this subclass. In this regard, G01M is the residual place for classifying testing of structures not covered elsewhere.

References

Limiting references

This place does not cover:

Apparatus for enzymology or microbiology	C12M
Measuring or testing processes, other than immunoassay (which is covered by G01N 33/53)	C12Q

Application-oriented references

Examples of places where the subject matter of this place is covered when specially adapted, used for a particular purpose, or incorporated in a larger system:

Measuring for medical or veterinary diagnosis on the human or animal body, e.g. measuring characteristics of blood in vivo, radiation diagnosis, or acoustic examination of body cavities or body tracts	A61B, A61D
Investigation, e.g. sampling, of foundation soil or ground water in-situ	E02D 1/00
Monitoring or diagnostic devices for exhaust-gas treatment apparatus	F01N 11/00
Measuring, investigating or testing electric or magnetic properties of materials (see also IPC definition for subgroup G01N 33/50)	G01R
Determining sensitivity, graininess, or density of photographic materials	G03C 5/02
Testing component parts of nuclear reactors	G21C 17/00

Informative references

Attention is drawn to the following places, which may be of interest for search:

Separating components of materials in general	B01D
Chemical or physical processes, e.g. catalysis, colloid chemistry; their relevant apparatus	B01J
Separation of solid materials from solid materials using wet methods, or using pneumatic tables or jigs	B03B, B03D
Separation of solid materials from solid materials or fluids using magnetic or electrostatic methods, or using high-voltage electric fields	B03C
Separation of solid materials from solid materials or fluids using sieving, screening, sifting, gas currents, or other dry methods	B07B
Combinatorial chemistry; Libraries	C40B
Systems for direction-finding, navigation, locating, presence-detecting using the reflection or reradiation of radio waves, or analogous arrangements using other waves, e.g. radar, sonar, or lidar systems	G01S
Testing electrographic developer properties	G03G 15/0848
Controlling or regulating non-electrical variable	G05D
Measuring degree of ionization of ionized gases, i.e. plasma	H05H 1/0006

Glossary of terms

In this place, the following terms or expressions are used with the meaning indicated:

Investigating	Means testing or determining
Materials	Means either solid, or liquid, or gaseous media, e.g. the atmosphere
Sample	Means material separated from a bulk material or an assembly of items for the purpose of investigating its properties

G01N 1/00

Sampling; Preparing specimens for investigation

Definition statement

This place covers:

The subject-matter indicated by its two main subdivisions G01N 1/02 (withdrawing) and G01N 1/28 (preparing):

G01N 1/02: Devices for withdrawing samples of material. Samples may be taken from e.g. bulk material, from flowing streams, or from collections of discrete items. The related methods, although not explicitly mentioned are also classified under G01N 1/02.

G01N 1/28: Preparing specimens for investigation, and related apparatus.

Relationships with other classification places

G01N 1/00 is limited to the withdrawal of samples under G01N 1/02 and the preparation of the samples under G01N 1/28. Further handling of the sample, such as the introduction of the sample into the analyser is covered either by the groups relevant to the specific analysers (e.g. H01L 37/00 or G01N 23/00 for electron microscopy) or by G01N 35/00(automated analysers).

Withdrawal is essential for the classification under G01N 1/02 (see definition of the sample in the subclass G01N): if the analysis of materials is performed directly on the bulk material without separation, for example by a probe placed within a flow, the document is classified in the relevant sub-class (e.g. G01N 21/00 if the analysis is made by optical means) but not under G01N 1/02

In many cases the subject-matter lies between G01N 1/00 and other groups within or outside G01N: the withdrawal of samples (G01N 1/02 and sub-groups) is often linked to the analysis of a specific material (G01N 33/00), to a specific analysis technique (e.g. G01N 21/00, H01H 37/00, H01J 49/00) or/and to the specific process (e.g. any manufacturing process for which relevant classes are defined); the preparation of samples (G01N 1/28 and sub-groups) uses physical processes and apparatuses classified as such in other sections of the classification (e.g separation techniques classified in B01D, B03, B04, B07). In all those cases, the documents should be circulated for classification to all relevant sections of the classification, as multiple classification facilitates retrieval of documents by intersection of groups:

for example US2007284523 is classified in B01D 59/44 (isotope separation) G01N 1/405 (concentration of samples by adsorption or absorption) and H01J 49/0468 (introduction of samples in mass spectrometers).

References

Application-oriented references

Examples of places where the subject matter of this place is covered when specially adapted, used for a particular purpose, or incorporated in a larger system:

Preparation of solid samples for infrared analysis	G01N 21/3563
Supporting, preparing samples in X-rays, gamma-rays or secondary emission analysis	G01N 23/20008, G01N 23/2202; G01N 23/2204
Preparation of samples for chromatographic analysis	G01N 30/04
Sample conditioning in gas analysers	G01N 33/0004
Automatic analysis; handling materials therefore; automated transfer of samples within the analysers	G01N 35/00
Preservation of cells,tissues, organs or bodily fluids	A01N 1/00

Sampling from the human or animal body for medical or veterinary diagnosis	A61B 5/1405, A61B 10/0045, A61B 10/02
Sampler for enzymology or microbiology,	C12M 33/00
Isolation, preparation or purification of DNA or RNA	C12N 15/00
Sampling or physically isolating microorganisms	C12Q 1/24
Sampling of foundation soil or groundwater in-situ	E02D 1/00
Sampling of soil or well fluids, specially adapted to earth drilling or wells	E21B 49/00
Mounting specimens on microscope slides	G02B 21/34
Means for supporting or positioning the objects or the material in electron microscopes	H01J 37/20
Arrangements for introducing or extracting samples to be analysed in mass spectrometers	H01J 49/04

Informative references

Attention is drawn to the following places, which may be of interest for search:

Separation, e.g. evaporation, sedimentation, filtration	B01D, B03B, B04, B07
Mixing. e.g. dissolving, emulsifying, dispersing	B01F
Containers or dishes for laboratory use, e.g. laboratory glassware	B01L 3/00
Laboratory gas handling apparatus	B01L 5/00
Pulverising in general	B02C
Metering by volume of fluids or fluent solid material	G01F 11/00, G01F 13/00
Testing of internal-combustion engines, by monitoring exhaust-gases	G01M 15/102
Details of nuclear or X-radiation measuring instruments, e.g. collecting or conveying of samples	G01T 7/00

Special rules of classification

In case a specific group exists under G01N 1/02 (withdrawal of samples) it takes precedence over the corresponding preparation technique under G01N 1/28: e.g. G01N 1/2202 takes precedence over G01N 1/40.

In case two or more groups of the same hierarchical level are essential to the subject-matter of a document, it is classified in all these groups:

for example, WO2008015030 is classified in both G01N 1/2214 (separation of components by sorption during sampling) and G01N 1/2273 (sampling of atmosphere).

An Indexing Code scheme G01N 1/00 mirrors the G01N 1/00 scheme with additional subdivisions. This G01N 1/00 scheme and more generally the G01N scheme should be used for additional information as well as more specific information to the documents classified in G01N 1/00:

for example WO2008015030 is given the code G01N 2001/2276 (more specific information added to G01N 1/2273: the atmospheric sampler can be worn by the user).

When a corresponding G01N group exists, a code G01N is given instead of the class when it covers a secondary aspect of the document:

for example EP0510951 is given the code G01N 1/14 (a liquid sample is withdrawn by a pump) in addition to the group G01N 1/405 (concentrating by sorption).

The purification (G01N 1/34) and the concentration (G01N 1/40) of a sample use similar separation techniques: in order not to duplicate sub-groups and codes, only G01N 1/40 and G01N 1/40 are subdivided. G01N 1/34 is used only when the preparation is explicitly presented as a purification of the sample (purification of nucleic acids being classified in C12N) and the Indexing Code scheme G01N 1/40 is used for specifying the technique used for documents classified in G01N 1/34.

G01N 1/02

Devices for withdrawing samples {(sampling of foundation soil E02D 1/04; collecting or conveying radioactive samples G01T 7/00, e.g. G01T 7/02, G01T 7/08)}

References

Limiting references

This place does not cover:

Sampling of foundation soil	E02D 1/04
Details of radiation-measuring instruments	G01T 7/00
Collecting means for receiving or storing samples to be investigated	G01T 7/02
Means for conveying samples received	G01T 7/08

Application-oriented references

Examples of places where the subject matter of this place is covered when specially adapted, used for a particular purpose, or incorporated in a larger system:

For medical or veterinary purpose	A61
Diagnosis; Surgery; Identification	A61B
Veterinary instruments, implements, tools, or methods	A61D

G01N 3/00

Investigating strength properties of solid materials by application of mechanical stress

Definition statement

This place covers:

Methods of investigations of strength properties of solid materials by application of mechanical stress as well as the testing apparatus and sample holders used in such investigations.

Application of mechanical stress can be global, e.g. tensile testing, local, i.e. applied at particular points of the sample, e.g. hardness testing, resistance to wear and abrasion. The force can be static, dynamic or impulsive. It includes stressing under but also beyond the elastic limit, e.g. until breaking occur. The force is usually applied by mechanical means, but can result from non-mechanical forces, e.g. rapid heat changes, but in any case, a stress has to be applied.

Relationships with other classification places

Since G01N 3/00 refers to strength properties by application of stress below and above the elastic limit, it may include plastic or flow behaviour, although plasticity and flow properties fall

under G01N 11/00: a document is classified in G01N 3/00 rather than G01N 11/00, if the material investigated is considered as a solid rather than a fluid or a fluent material (see definition in Glossary)) and the method of testing corresponds to a specific group in G01N 3/00: For example, US5187987 relates to tests of mechanical properties of visco- elastic materials, having some elasticity and slow flow or creep, and uses bending tests. It is classified in G01N 3/20.

G01N 3/00 may overlap with G01N 19/00(investigations of materials by mechanical methods): For example: Resistance to wear is classified under G01N 3/56, but the investigation of friction by mechanical means is classified under G01N 19/02.

The investigation of strength using steady shearing forces is classified under G01N 3/24, but the investigation of adhesion by mechanical means is classified under G01N 19/04.

As indicated in the definition of the sub-class G01N, the testing of structures is classified in the relevant subclass for the structure being tested. G01M is the residual place for classifying testing of structures not covered elsewhere.

For investigation by computer-aided simulation without physical application of mechanical stress, e.g. by finite elements methods see G06F.

Strength properties can be investigated at a microscopic scale (e.g. microbending , microindentation) under the scope of G01N 3/00(code G01N 2203/0286 : miniaturised specimen; testing on microregions of a specimen); Nevertheless, investigation at atomic, molecular or cellular level will not always be covered by G01N 3/00 and other areas of the classification have to be considered such as G01Q, B81, B82, C12, specially when the investigation of the strength property is integrated in a process covered by those other areas. For example WO2008105919 is classified in G01Q 60/00(the measurement is made by atomic force microscopy) and C12N 5/00(the analysis is integrated in a general process of cultivation or maintenance of animal and human cells).

In the above examples, and more generally when the subject-matter lies between G01N 3/00 and other groups within or outside G01N, the documents should be circulated for classification to all possible relevant sections of the classification, as multiple classification facilitates retrieval of documents by intersection of groups, For example, US2005223812 is classified in G01N 3/00(investigation of strength) and in G01M 5/00(elasticity of structures); WO2008105919 (see above) is classified in G01Q and C12N but has also G01N 3/00 codes describing the mechanical stress applied to the cells.

References

Informative references

Attention is drawn to the following places, which may be of interest for search:

Sampling; preparing specimens for investigation	G01N 1/00
Viscosity; plasticity	G01N 11/00
Investigating properties of materials by mechanical methods	G01N 19/00
Friction; adhesion	G01N 19/02, G01N 19/04
Automatic analysis; handling materials therefor	G01N 35/00
Generating mechanical vibrations in solids	B06B
Use of mechanical means for measuring roughness or irregularity of surfaces, or for measuring deformation in a solid, e.g. mechanical strain gauge	G01B 3/00, G01B 5/28, G01B 5/30
Use of electric or magnetic means for measuring roughness or irregularity of surfaces, or for measuring deformation in a solid, e.g. resistance strain gauge	G01B 7/16, G01B 7/34

Use of optical means for measuring roughness or irregularity of surfaces, or for measuring deformation in a solid, e.g. optical strain gauge	G01B 11/16, G01B 11/30
Measuring stress in general, e.g. by strain gauges	G01L 1/00
Measuring torque on nuts or screws	G01L 5/24
Investigating elasticity of structures, e.g. deflection of bridges, aircraft wings	G01M 5/00
Vibration-testing or shock-testing of structures	G01M 7/00
Investigating or analysing surface structures in atomic ranges using scanning-probe techniques, e.g. atomic force microscopy (ATM)	G01Q
Computer-aided design	G06F 30/00
Generating mechanical vibrations in fluids	G10K

Special rules of classification

In case two or more groups of the same hierarchical level are essential to the subject-matter of a document, it is classified in all these groups:

The G01N 3/00 scheme and more generally the G01N scheme should be used for additional information as well as more specific information to the documents classified in G01N 3/00: US2005223812 is classified in G01N 3/06 (recording means in investigation of strength) with the codes G01N 3/066 (electrical sensing: more specific information than G01N 3/06), G01N 2203/0062 (detection of cracks: additional information) and G01N 35/00871 (communications with remote terminals); US5187987,classified in G01N 3/20 (see above, relationship between large subject-matter areas) is given the code G01N 11/00 (flow properties).

Glossary of terms

In this place, the following terms or expressions are used with the meaning indicated:

Materials	a category of subject matter that embraces any substance, intermediate product, or composition of matter which is acted upon to make a product.
Structure	any manufactured object as long as the strength properties investigated are related to the structure of the manufactured object rather than to the properties of its materials
Solid materials	materials are considered solid as long as they are to a certain extent rigid and can be submitted at tests such as tensile tests, bending tests or indentation tests.(It could be argued that there is no clear cut distinction between a highly viscous liquid and an amorphous solid, but a common sense distinction between solid and fluid or fluent materials is usually enough)
Strength properties	properties not only relating to elasticity and fracture, but also visco elasticity or visco plasticity as long as they concern solid materials as defined above

G01N 3/06

Special adaptations of indicating or recording means

References

Informative references

Attention is drawn to the following places, which may be of interest for search:

Indicating or recording means for measuring in general	G01D

G01N 3/12

Pressure testing

References

Informative references

Attention is drawn to the following places, which may be of interest for search:

Testing fluid tightness	G01M 3/00

G01N 3/32

by applying repeated or pulsating forces

References

Informative references

Attention is drawn to the following places, which may be of interest for search:

Generation of such forces in solid	B06B
Generating mechanical vibrations in fluids	G10K

G01N 5/00

Analysing materials by weighing, e.g. weighing small particles separated from a gas or liquid (G01N 9/00 takes precedence {; weighing per se G01G})

Definition statement

This place covers:

Analysing materials by weighing.

Analysing materials by absorbing or adsorbing components of a material and determining change of weight of the adsorbent, e.g. for determining moisture content.

Analysing materials by removing a component, e.g. by evaporation, and weighing the remainder.

G01N 5/00 is limited to analysing materials by weighing, e.g. small particles separated from a gas or a liquid. Typically the materials being analysed will be loose materials, like powders or seeds, or dispersed materials like dusts, though the group is not limited to these materials.

Four subgroups are allocated under the main group, according to the aspects of either absorbing/ adsorbing material (G01N 5/02) or removing material (G01N 5/04) and measuring the related change

of weight. Under each of these subgroups another subgroup for determining moisture content is allocated.

References

Limiting references

This place does not cover:

Investigating density or specific gravity of materials; analysing materials by determining density or specific gravity	G01N 9/00

Application-oriented references

Examples of places where the subject matter of this place is covered when specially adapted, used for a particular purpose, or incorporated in a larger system:

Measuring moisture content by mechanical methods other than weighing	G01N 19/10
Sorting by weighing	B07C 5/16
Monitoring or diagnostics devices for exhaust gas treatment; exhaust apparatus having means for purifying exhaust, e.g. by regenerating the soot filter; electrical control of exhaust gas treating apparatus, including detection of clogging to prepare filter regeneration	F01N 11/00, F01N 3/00, F01N 9/00
Testing of internal-combustion engines, by monitoring exhaust gases	G01M 15/10
Control of humidity	G05D 22/00

Informative references

Attention is drawn to the following places, which may be of interest for search:

Sampling; preparing specimens for investigation	G01N 1/00
Analysing materials by measuring the pressure or volume of a gas or vapour	G01N 7/00
Investigating flow properties of materials, e.g. viscosity, plasticity; analysing materials by determining flow properties	G01N 11/00
Investigating surface or boundary effects, e.g. wetting power; investigating diffusion effects; analysing materials by determining surface, boundary or diffusion effects	G01N 13/00
Investigating concentration of particles, e.g. by collecting them on a support, or by using electric, e.g. electrostatic or magnetic methods	G01N 15/06
Details of temperature scanning in thermal analysis	G01N 25/4833
Investigating resistance, e.g. for determining moisture content.	G01N 27/12
Investigating capacitance for determining moisture content	G01N 27/22
Investigating methods characterised by the material subject to investigation	G01N 33/0004, G01N 33/46
Immunoassay, bio specific binding assay	G01N 33/53
Automatic analysis; handling materials therefor	G01N 35/00
Sorting eggs by weight	A01K 43/08

Separation of gases or vapours; recovering vapours of volatile solvents from gases; chemical or biological purification of waste gases, e.g. engine exhaust gases, smoke, fumes, flue gases, aerosols Separation of gases or vapours, recovering vapours of volatile solvents from gases, chemical or biological purification of waste gases, by adsorption, by absorption. Condensation of vapours, Sublimation Cold traps, cold baffles	B01D, B01D 53/02, B01D 53/14, B01D 5/00, B01D 7/00, B01D 8/00
Mixing. e.g. dissolving, emulsifying, dispersing	B01F
Chemical or physical processes, e.g. catalysis, colloid chemistry, and their relevant apparatus	B01J
Magnetic or electrostatic separation of solid materials from solid material or fluids; separation by high-voltage electric fields; Flotation; differential sedimentation	B03C, B03D
Spraying apparatus; atomising apparatus; nozzles	B05B
Weighing	G01G
Quartz crystal microbalance (QCM)	G01G 3/13
Measurement of mechanical vibrations or ultrasonic, sonic or infrasonic waves, e.g. measuring resonant frequency	G01H 13/00
Measuring force, stress, fluid pressure, among others	G01L

Special rules of classification

An Indexing Code scheme has been developed in G01N 5/00 in parallel to the structure of the main group and mirrors it, which should be used for documents with the core of the invention outside G01N 5/00 and being classified there, but covering some specific aspects of a group or subgroup of G01N 5/00.

Synonyms and Keywords

In patent documents, the following abbreviations are often used:

QCM	quartz crystal microbalance
TG(A)	thermo gravimetric (analysis)

G01N 7/00

Analysing materials by measuring the pressure or volume of a gas or vapour

Definition statement

This place covers:

Analysing materials by measuring the pressure or volume of a gas or vapour, like:

- by absorption, adsorption, or combustion of components and measurement of the change in pressure or volume of the remainder.
- allowing diffusion of components through a porous wall and measuring a pressure or volume difference.
- by allowing the material to emit a gas or vapour, e.g. water vapour, and measuring a pressure or volume difference.

Analysing materials by measuring the pressure or volume of a gas or vapour by the use of other means than those mentioned above.

The analyses where a property of a material such as the concentration of a given component is measured by the value of the pressure or volume or its change when the material is subject to a process such as absorption, adsorption, combustion, diffusion, evaporation

Relationships with other classification places

G01N 7/00 does not cover the measurement of the volume or pressure made to ensure that the analysis takes place at a defined pressure or volume, to regulate the pressure or volume or to correct a measurement because of deviation from a standard value of pressure or volume. In this case there is usually another relevant class in G01N, or/and in G05 such as G05D 16/00 when the control of pressure is an essential subject-matter.

for example,

US2005191453 is classified in G01N 7/00 as the property investigated (shelf-life of a packaged material) is evaluated from the pressure decay in the package.

EP1391714 is not classified in G01N 7/00 as the property investigated (the mass of particulate collected on a filter) is evaluated by gravimetry (G01N 5/00), the monitoring of pressure being used for correcting the gravimetric measurement.

References

Informative references

Attention is drawn to the following places, which may be of interest for search:

Sampling; preparing specimens for investigation	G01N 1/00
Investigating permeability by measuring weight or volume of sorbed fluid	G01N 15/0893
Automatic analysis; handling materials therefor	G01N 35/00
Measuring volume	G01F 17/00, G01F 19/00, G01F 22/00
Measuring fluid pressure	G01L 7/00 - G01L 23/00

Special rules of classification

An Indexing Code scheme G01N 7/00 mirrors the G01N 7/00 scheme. This G01N 7/00 scheme and more generally the G01N scheme is used for additional information.

A code G01N 7/00 is given instead of the class, when it only covers an additional aspect of the document.

G01N 9/00

Investigating density or specific gravity of materials; Analysing materials by determining density or specific gravity

Definition statement

This place covers:

The measurement of density or specific gravity (see Glossary) by direct methods, like the weight of known volume of material, the application of Archimedes' principle or the measurement of hydrostatic pressure.

The determination of density or specific gravity from a related property of the material, e.g. by using flow properties, by submitting the liquid to vibrations or by observing the transmission of wave or particle radiation through the material.

The investigation of other properties of the material by determining its density.

This group covers devices as well as methods.

The materials being investigated can be solid, fluent solids or fluids.

Further details of subgroups: G01N 9/36 refers to the use of density for determining other properties. This group is often combined with the other groups of G01N 9/00 to specify the method used for determining the density.

Relationships with other classification places

The measurement of density of fluids is often combined with measurement of flow properties classified in G01N 11/00 as well as with measurement of mass or volume flow classified in G01F. For example, US3839914 is classified in G01N 9/26, in G01N 11/08 and in G01F 1/206.

G01N 9/24 refers to the transmission of wave or particle radiation. Other main groups of G01N are often relevant for specifying which wave or radiation is used: for example, EP2251669 is classified both in G01N 9/24 (investigating density) and to G01N 23/16 (use of X-ray radiation on a moving sheet)

As G01N 9/36 refers to the use of density for determining other properties. this group is often combined with other groups outside G01N 9/00 for specifying which properties are determined:

for example, EP2251669 is classified in G01N 9/36 (density measured for identifying a material), in G01N 9/12 (density measured by observing depth of immersion) and in A61M 16/104 (respiratory systems for patients).

In all cases mentioned above, the documents should be circulated for classification to all relevant sections of the classification, as multiple classification facilitates retrieval of documents by intersection of groups.

References

Informative references

Attention is drawn to the following places, which may be of interest for search:

Sampling; preparing specimens for investigation	G01N 1/00
Analysing by weighing	G01N 5/00
Analysing by measuring the pressure or volume	G01N 7/00
Automatic analysis; handling materials therefor	G01N 35/00
Checking density of materials to be filled	B65B 1/42
Coriolis flow-meters	G01F 1/84
Indirect mass flow meters, e.g. measuring volume flow and density	G01F 1/86
Measuring volume	G01F 17/00, G01F 19/00, G01F 22/00
Weighing	G01G
Measuring temperature by using measurements of density	G01K 11/28
Ratio control by sensing density of mixture	G05D 11/06

Special rules of classification

An Indexing Code scheme G01N 9/00 mirrors the G01N 9/00 scheme with additional subdivisions. This G01N 9/00 scheme and more generally the G01N scheme is used for additional information as well as more specific information to the documents classified in G01N:

for example DE4013246 is given the code G01N 2009/024 (more specific information added to G01N 9/02: the volume is known from the size of a container) and G01N 2001/2021 (additional information: sampling from a fluid falling under gravity).

Glossary of terms

In this place, the following terms or expressions are used with the meaning indicated:

Density	mass per unit volume
Specific gravity	the density of a substance divided by the density of water (since the latter is 1 gr/cm3, specific gravity is the same number as density but without any units)

G01N 11/00

Investigating flow properties of materials, e.g. viscosity, plasticity; Analysing materials by determining flow properties

Definition statement

This place covers:

This main group covers devices as well as methods related to:

Investigating or analysing flow properties of materials, like: viscosity, or its reciprocal fluidity; plasticity; yield stress.

Analysing materials by determining flow properties.

The material investigated has to behave as a fluid or a fluent material, rather than as a solid, meaning that it cannot be submitted to tests as defined under G01N 3/00 such as tensile tests, bending tests or indentation tests.

Relationships with other classification places

G01N 11/00 refers to the investigation of flow properties and mentions plasticity, but plastic or flow behaviour is also present when investigating strength properties by application of stress below and above the elastic limit, as in G01N 3/00: investigation of viscosity is always classified in G01N 11/00, and for other properties a document is classified in G01N 11/00 rather than G01N 3/00 if the material investigated is considered as a fluid or a fluent material rather than a solid or when the method used does not fall under the methods enumerated under G01N 3/00. In border line cases such as documents relating to curing, a double classification is done, with double classification G01N 11/00-G01N 3/00, G01N 11/00-G01N 3/00 or G01N 3/00-G01N 11/00. For example, US6523397 is classified in G01N 11/142 (parallel plate rotating viscometer) with G01N 3/00 codes indicating shearing forces and investigation of curing and viscoelastic properties.

References

Application-oriented references

Examples of places where the subject matter of this place is covered when specially adapted, used for a particular purpose, or incorporated in a larger system:

Measuring characteristics of blood in vivo, e.g. blood viscosity, for medical or veterinary diagnosis	A61B 5/145

Informative references

Attention is drawn to the following places, which may be of interest for search:

Sampling; preparing specimens for investigation	G01N 1/00
Investigating strength properties of solid materials by application of mechanical stress	G01N 3/00
Investigating permeability of porous materials	G01N 15/08
Specific methods of analysis of viscous liquids	G01N 33/26
Specific methods of analysis of biological materials	G01N 33/48
Automatic analysis; handling materials therefor	G01N 35/00
Measuring volume, volume flow, or liquid level	G01F
Measuring fluid pressure	G01L 7/00, G01L 23/00
Control of flow	G05D 7/00
Control of viscosity	G05D 24/00

Special rules of classification

In case two or more groups under G01N 11/00 are essential to the subject-matter of a document, it is classified in all these groups. Example GB2400918 is classified in G01N 11/14 and G01N 11/162 as it mentions explicitly both rotation in a single direction and oscillating rotation.

An Indexing Code scheme G01N 11/00 mirrors the G01N 11/00 scheme with additional subdivisions. This G01N 11/00 scheme and more generally the G01N scheme is used for additional information as well as more specific information to the documents classified in G01N: for example GB2400918 (also mentioned above) is classified in G01N 11/14 (moving a rotary body). It has the code G01N 2011/0046 (additional information: the test is done during a mixing process) and the code G01N 2011/147 (more specific information: the rotation uses magnetic coupling).Documents are classified in G01N 11/162 when the rotation is oscillatory, and in G01N 11/14 when there is a single direction of rotation.

Glossary of terms

In this place, the following terms or expressions are used with the meaning indicated:

Viscosity	The resistance of a fluid to a change in shape, or movement of neighbouring portions relative to one another. Viscosity denotes opposition to flow. The reciprocal of the viscosity is called the fluidity, a measure of the ease of flow.
Plasticity	Ability of certain solids to flow or to change shape permanently when subjected to stresses of intermediate magnitude between those producing temporary deformation, or elastic behaviour, and those causing failure of the material, or rupture.

G01N 13/00

Investigating surface or boundary effects, e.g. wetting power; Investigating diffusion effects; Analysing materials by determining surface, boundary, or diffusion effects (scanning-probe techniques or apparatus G01Q)

Definition statement

This place covers:

Investigating properties of interfaces between solids and fluids or between different fluids, like surface tension, wetting power, contact angle, skin friction; osmosis; diffusion; dissolution of tablets; foam stability.

Relationships with other classification places

G01N 13/00 does cover surface effects and does not cover the properties of solid surfaces per se such as roughness (G01B), surface defects (see relevant technique, e.g. G01N 21/892 or the investigation made using scanning probe techniques (G01Q)

Equally, G01N 13/00 does not cover the measurement of porosity or surface area of porous materials (G01N 15/08).

References

Application-oriented references

Examples of places where the subject matter of this place is covered when specially adapted, used for a particular purpose, or incorporated in a larger system:

Investigating materials using particle radiation or electro magnetic waves not being optical or microwaves and measuring secondary emission	G01N 23/22
Scanning-probe techniques or apparatus	G01Q

Informative references

Attention is drawn to the following places, which may be of interest for search:

Sampling; preparing specimens for investigation	G01N 1/00
Investigating porosity or surface area of porous materials	G01N 15/08
Thermodynamic interactions between different phases of the same substance	G01N 25/02
Investigating medicinal preparations	G01N 33/15
Automatic analysis; handling materials therefor	G01N 35/00
Measuring roughness or irregularity of surfaces, or measuring deformation in a solid	G01B
Electron microscopy in general	H01J 37/00

Special rules of classification

An Indexing Code scheme G01N 13/00 mirrors the G01N 13/00 scheme with additional subdivisions. This G01N 13/00 scheme and more generally the G01N scheme is used for additional information as well as more specific information to the documents classified in G01N. For example: US2009165578 is classified in G01N 13/00. The code G01N 2013/006 specifying that it relates to dissolution of tablets, and the group G01N 33/15 specifying that it relates to a medicinal product.

G01N 15/00

Investigating characteristics of particles; Investigating permeability, pore-volume, or surface-area of porous materials (identification of microorganisms C12Q)

Definition statement

This place covers:

A first aspect, relating to the characteristic of particles, limited to the investigation of characteristics of free particles, i.e., particles which are not bound to surfaces or solid materials, but which can be collected on a surface for the purpose of analysis.

A second aspect, relating to the investigation of permeability, pore-volume or surface-area of porous materials. The term porous material is understood to also include microporous materials and film or membrane materials.

References

Application-oriented references

Examples of places where the subject matter of this place is covered when specially adapted, used for a particular purpose, or incorporated in a larger system:

Investigating concentration of particle suspensions by weighing	G01N 5/00
Investigating particle size or size distribution by measuring osmotic pressure	G01N 7/10
Chemical analysis of biological material	G01N 33/50
Diagnosis, analysis on the human or animal body; veterinary instruments, implements, tools or methods; devices for introducing media into, or onto, the body, e.g., sprayers, atomisers for therapeutic purposes, inhalators; methods are apparatus for disinfecting or sterilising materials, including testing the effectiveness or completeness thereof; dialysis systems	A61B, A61D, A61M, A61L
Investigating particle size or size distribution by filtering, e.g. testing of membranes	B01D, B01D 65/10
Investigating particle size or size distribution by sifting	B07B
Apparatus for enzymology or microbiology, e.g. inoculator, sampler, tissue, human, animal or plant cell or virus culture apparatus	C12M
Microorganisms or enzymes, compositions thereof, propagating preserving or maintaining microorganisms, mutation or genetic engineering, including sperm cell counting	C12N
Measuring or testing processes involving enzymes or microorganisms	C12Q
Testing the nature of borehole walls or formation testing by injection test	E21B 49/00
Monitoring or diagnostics devices for exhaust gas treatment; exhaust apparatus having means for purifying exhaust, e.g. by regenerating the soot filter; electrical control of exhaust gas treating apparatus, including detection of clogging to prepare filter regeneration	F01N 11/00, F01N 3/00, F01N 9/00
Fluid tightness of structures	G01M 3/00
Testing of internal-combustion engines, by monitoring exhaust gases	G01M 15/10
Scanning probe or apparatus	G01Q
Arrangements or instruments for measuring magnetic properties of articles or specimens of solids of fluids	G01R 33/12

Radio direction finding, radio navigation, determining distance or velocity by use of radio waves	G01S
Geophysics, e.g. seismology, prospecting	G01V
Discharge tubes for examining objects or materials exposed to the discharge, e.g., electron or ion microscopes	H01J 37/00
Particle spectrometers or separators	H01J 49/00

Informative references

Attention is drawn to the following places, which may be of interest for search:

Sampling (withdrawing samples), preparation of samples, e.g. sampling of aerosols	G01N 1/00, G01N 2001/2223
Staining of samples	G01N 1/30
Investigating density or specific gravity of materials	G01N 9/00
Investigating flow properties of materials, e.g. viscosity, plasticity; analysing materials by determining flow properties	G01N 11/00
Investigating surface or boundary effects, e.g. wetting power; investigating diffusion effects; analysing materials by determining surface, boundary or diffusion effects	G01N 13/00
Analysing materials by optical means, e.g. using scattering or fluorescence	G01N 21/47, G01N 21/64
Analysing materials by electric, magnetic means	G01N 27/00
Analysing materials by ultrasonic, sonic or infrasonic waves	G01N 29/00
Analyses of materials according to the nature of the material analysed (gaseous mixtures; food; medical preparations; water; metals; fuels and explosives; earth materials; oils; viscous liquids; paints; inks; paper; textiles; concrete; ceramics; glass; and bricks; grinding-materials; road-making materials; resins; rubber; leather; wood)	G01N 33/0004 - G01N 33/46
Automatic analysis; automated transfer of samples after their withdrawal to the analysers, including automatic transfer of microbeads or other solid microparticles, and magnetic separation	G01N 35/00
Mixing. e.g. dissolving, emulsifying, dispersing	B01F
Chemical or physical processes, e.g. catalysis, colloid chemistry, and their relevant apparatus	B01J
Containers or dishes for laboratory use, e.g. laboratory glassware, microfluidic systems, centrifuge vessels	B01L 3/00
Crushing, pulverising, preparatory treatment of grain for milling	B02
Magnetic or electrostatic separation of solid materials from solid material or fluids; separation by high-voltage electric fields;	B03C
Flotation; differential sedimentation	B03D
Centrifuges	B04B
Spraying apparatus; atomising apparatus; nozzles	B05B
Controlling; regulating; systems for controlling or regulating	G05
Specific image analysis method for the recognition of microscopic objects	G06K 9/00127
Extraction of features from image for pattern recognition	G06K 9/46

Counting objects disposed at random with size distinction	G06M 11/04
Image enhancement in general	G06T 5/00
Image analysis in general	G06T 7/00
Techniques for handling particles, e.g., optical traps	G21K
Means for supporting or positioning the objects or the material in electron microscopy	H01J 37/20
Processes or apparatus adapted for the manufacture or treatment of semiconductor or solid state devices or of parts thereof	H01L 21/00

Special rules of classification

An Indexing Code scheme has been developed in parallel to the structure of the group and mirrors it, apart from finer subdivisions for the purpose of classifying additional (secondary) aspects. Documents with the invention outside G01N 15/00, but covering some specific aspects of a group or subgroup of G01N 15/00, should only obtain an Indexing Code in G01N 15/00, with their class elsewhere.

In general, subgroups of this are further subdivided into subgroups according to the method of investigation used, e.g., optical, electrical, mechanical/inertia. Usually the most specific (sub-)group takes precedence. In borderline cases or cases with different inventive aspects, classification takes place in different groups or subgroups, respectively.

The mere sampling or withdrawal of samples of particle suspensions without the inventive aspect being in the investigation comes under G01N 1/02 and its subgroups, mere sample preparation under G01N 1/28 and its subgroups

For searches: Indexing Code G01N 2001/2223 (sampling of aerosols) could in some cases be relevant for aerosol-related searches in G01N 15/00.

G01N 15/02 and its subgroups refer to investigating particle size or size distribution of particle assemblies. When the size is investigated on individual particles, G01N 15/10 and its subgroups take precedence.

For searches in G01N 15/0255, G01N 15/0272 or G01N 15/0266, relevant documents might be found in some of the classes and groups referring to separation, as mentioned above. In case of optical methods being used, G01N 21/00 may often contain relevant additional documents, e.g., in G01N 21/47 (scattering, in general), in G01N 21/49 (scattering within a body or fluid), in G01N 21/51 (scattering inside a container), in G01N 21/53 (scattering within a flowing fluid), or in G01N 21/64 (fluorescence). In case of ultrasonic methods used, G01N 29/00 and its subgroups should be consulted in addition to G01N 15/02.

For atomisers, sprayers for therapeutic purposes, inhalators occasionally relevant to searches in G01N 15/0255, cf. A61M 11/00, A61M 15/00.

G01N 15/04 and its subgroup refer to sedimentation of particle suspensions and take precedence over G01N 15/02. The groups relating to centrifuges (B04B), laboratory centrifuge vessels (B01L 3/5021) or differential sedimentation (B03D) are also relevant.

G01N 15/06 and its subgroups cover the investigation of the concentration of particles in suspension (gas, liquid). G01N 15/02, G01N 15/04, and G01N 15/10 and their subgroups take precedence.

For searches: In case of optical or sonic/ultrasonic techniques, see groups of G01N 21/00 and G01N 29/00, respectively, as mentioned already for G01N 15/02. In case of measuring the concentration of particles in exhaust gas/soot particles, cf. also F01N 11/00. For monitoring the functioning of the soot filter, or its regeneration, cf. F01N 3/00, F01N 9/002. For the electrical sensors, e.g. electrode arrangements, cf. G01N 27/00. In case of measuring the mass of the particles collected, cf. e.g. G01N 5/00 or G01N 5/02. For effectiveness or completeness of sterilisation, cf. A61L 2/28.

G01N 15/08 refers to the second aspect covered by G01N 15/00, i.e., the investigation of permeability, pore-volume and surface-area of porous materials. The term of porous materials is interpreted in a broad sense, as all materials have pores, though of different sizes. Testing of membranes (without explicit reference to measurement of the permeability, pore-volume or surface-area) is found in B01D 65/10. For investigating the fluid tightness of structures, cf. G01M 3/02. Medical dialysis systems with membranes are dealt with in A61M 1/16, and documents related to testing the nature of borehole walls or formation testing by injection test are found in E21B 49/00.

G01N 15/10 and its subgroups deal with the first aspect covered by G01N 15/00 again, i.e., the investigation of particles, in this part of G01N 15/00: of individual particles. In case of characterisation of the individual particles, the related document is classified in G01N 15/10 and below. Subgroup G01N 15/12 (Coulter counters) takes precedence over G01N 15/1031 (measuring electrical or magnetic effects of the individual particles). For the electrode structures in G01N 15/12 or G01N 15/1031, cf. also G01N 27/00 and relevant subgroups.

G01N 15/1031 refers to measuring electrical or magnetic effects of the individual particles other than their resistance or impedance as measured in the specific way in which Coulter counters operate. For magnetic separation of particles in automatic analysis, see G01N 35/0098. For use of magnetic beads in immunoassays, see G01N 33/54326. Mere separation of particles by electrical or magnetic methods is dealt with in B03C. If the focus is on the specific magnetic sensor for measuring individual or collective magnetic effects of particles, e.g. giant magnetoresistance, see G01R 33/12.

G01N 15/12 and its subgroups refer to Coulter counters and their details, i.e., the impedance or resistance change due to the transfer of an individual particle through an aperture is measured between electrodes upstream and downstream of the aperture.

G01N 15/14 and its subgroups refer to the electro-optical investigation of individual particles, e.g. in flow cytometers, whether or not microstructured (microfabricated devices are covered by subgroup G01N 15/1484; mere manipulation of particles in microfluidic systems is dealt with in B01L 3/5027). In case of image analysis for only measuring the size distribution without any interest in the analysis of individual particles, the related document is classified in G01N 15/0227. In case the focus is on the characterisation of individual particles by image analysis, the document is classified in G01N 15/1463, if resolution of the inner structure of the particle (e.g., nucleus, plasma, membrane of a cell, or its further organelles) is not achieved, or in G01N 15/1475, if resolution of the inner structure of the particle is achieved.

For searches: G01N 21/00 may contain additional relevant documents, e.g., in G01N 21/03 (cuvette constructions), in particular G01N 21/05 (flow-through cuvettes), in G01N 21/47 (scattering, in general), in G01N 21/49 (scattering within a body or fluid), in G01N 21/51 (scattering inside a container), in G01N 21/53 (scattering within a flowing fluid), or in G01N 21/64 (fluorescence).

The details of the image analysis in G01N 15/1463 or G01N 15/1475, respectively, can be classified in addition in (and should therefore be circulated to) G06M 11/04 (counting objects disposed at random with size distinction) G06K 9/46 (extraction of features from image for pattern recognition), G06K 9/00127 (specific image analysis method for the recognition of microscopic objects, G06T 5/00 (image enhancement in general) and G06T 7/00 (image analysis in general).

Glossary of terms

In this place, the following terms or expressions are used with the meaning indicated:

Permeability	Capacity of a porous material to transmit a fluid
Porosity	is the fraction of the volume of an apparent solid that is actually empty space

G01N 15/02

Investigating particle size or size distribution (G01N 15/04, G01N 15/10 take precedence; by measuring osmotic pressure G01N 7/10)

References

Limiting references

This place does not cover:

Measuring osmotic pressure	G01N 7/10
Investigating sedimentation of particle suspensions	G01N 15/04
Investigating individual particles	G01N 15/10

Application-oriented references

Examples of places where the subject matter of this place is covered when specially adapted, used for a particular purpose, or incorporated in a larger system:

By filtering	B01D
By shifting	B07B

G01N 17/00

Investigating resistance of materials to the weather, to corrosion, or to light

Definition statement

This place covers:

Investigating resistance of materials to atmospheric or chemical agents, or their resistance to light.

The detection of fouling.

Specially adapted electrochemical means used in such investigations.

References

Informative references

Attention is drawn to the following places, which may be of interest for search:

Sampling; preparing specimens for investigation	G01N 1/00
Investigating resistance to wear or abrasion	G01N 3/56
Investigating resistance to rapid heat changes	G01N 3/60
Measuring wear by the use of optical means	G01N 21/00
Detection of fouling by measuring thermal conductivity	G01N 25/18
Investigating or analysing materials by the use of electrochemical means	G01N 27/26
Automatic analysis; handling materials therefore	G01N 35/00
Methods or apparatus for cathodic or anodic protection	C23F 13/00
Measuring roughness or irregularity of surfaces, or measuring deformation in a solid	G01B
Investigating fluid tightness of structures	G01M 3/00

G01N 19/00

Investigating materials by mechanical methods (G01N 3/00 - G01N 17/00 take precedence)

Definition statement

This place covers:

Mechanical methods for investigating materials as well instruments, e.g. hygrometers, used for performing such methods.

is limited by the means used for the investigation ('mechanical methods').There is no limitation as to the type of properties investigated: they are not necessary mechanical properties. G01N 19/00 is mainly subdivided according to the property investigated. The enumeration of these properties - friction; adhesive force; moisture content; removal of material (spark-testing) presence of flaws or irregularities- covers in fact the properties investigated in this main group. There is no limitation on the state of the material (it can be solid, fluid, fluent). But the limitation by exclusion of subject-matter covered by the previous groups of G01N is essential as many previous groups use mechanical methods (e.g. G01N 3/00, G01N 5/00, G01N 9/00, G01N 11/00).

Relationships with other classification places

As indicated in the definition of the sub-class G01N, the testing of structures is classified in the relevant subclass for the structure being tested. G01M is the residual place for classifying testing of structures not covered elsewhere. The properties investigated in G01N 19/00(e.g. friction, adhesive force) are most of the time properties of the materials rather than the structure and are classified accordingly;

For example:when the friction between road and wheels of a vehicle is determined without a specific friction sensor, it is classified uniquely in B60 (vehicles). But when a special 'friction sensor' is incorporated, there may be a double classification B60 and G01N 19/00, even if it could be argued that the friction is related to the structure of the tyre and the vehicle rather than simply to the material of which the tyre is made.

G01N 19/00 may overlap with G01N 3/00(investigations of strength properties):

For example

- the investigation of friction by mechanical means is classified under G01N 19/02, but resistance to wear is classified under G01N 3/56.
- The investigation of adhesion by mechanical means is classified under G01N 19/04, but the investigation of strength using steady shearing forces is classified under G01N 3/24.

References

Limiting references

This place does not cover:

Investigating strength properties of solid materials by application of mechanical stress	G01N 3/00
Analysing materials by weighing, e.g. weighing small particles separated from a gas or liquid	G01N 5/00
Analysing materials by measuring the pressure or volume of a gas or vapour	G01N 7/00
Investigating density or specific gravity of materials; analysing materials by determining density or specific gravity	G01N 9/00

Investigating flow properties of materials, e.g. viscosity, plasticity; analysing materials by determining flow properties	G01N 11/00
Investigating surface or boundary effects, e.g. wetting power; investigating diffusion effects; analysing materials by determining surface, boundary, or diffusion effects	G01N 13/00
Investigating characteristics of particles; investigating permeability, pore-volume, or surface-area of porous materials	G01N 15/00
Investigating resistance of materials to the weather, to corrosion, or to light	G01N 17/00

Application-oriented references

Examples of places where the subject matter of this place is covered when specially adapted, used for a particular purpose, or incorporated in a larger system:

Determination of friction coefficient between road and wheel without additional sensors; application of friction determinations to the control of vehicle braking	B60T

Informative references

Attention is drawn to the following places, which may be of interest for search:

Sampling; preparing specimens for investigation	G01N 1/00
Automatic analysis; handling materials therefor	G01N 35/00
Use of mechanical means for measuring roughness or irregularity of surfaces, or for measuring deformation in a solid, e.g. mechanical strain gauge	G01B 3/00, G01B 5/28, G01B 5/30
Investigating elasticity of structures, e.g. deflection of bridges, aircraft wings	G01M 5/00
Vibration-testing or shock-testing of structures	G01M 7/00

Special rules of classification

In case two or more groups of the same level are essential to the subject-matter of a document, it is classified in all these groups

The G01N 19/00 scheme and more generally the G01N scheme should be used for additional information as well as more specific information to the documents classified in G01N 19/00.

The investigation by removing mechanically material is classified within G01N 19/06, provided it is not a sampling of the material (G01N 1/04), a preparation of the surface before the investigation (G01N 1/286), or an abrasion test (G01N 3/56).

The measurement of moisture content is classified in G01N 19/10 uniquely if it is done by mechanical means. As there is no general group in G01N for measuring moisture content, G01N 19/10 is only one among a plurality of groups for measuring moisture content: e.g. G01N 5/025, G01N 5/045, G01N 21/3554, G01N 22/04, G01N 25/56, G01N 27/048, G01N 27/121, G01N 27/223, G01N 27/605, G01N 31/222.

G01N 19/08

Detecting presence of flaws or irregularities

References

Informative references

Attention is drawn to the following places, which may be of interest for search:

Measuring roughness or irregularity of surfaces	G01B 5/28

G01N 21/00

Investigating or analysing materials by the use of optical means, i.e. using sub-millimetre waves, infrared, visible or ultraviolet light (G01N 3/00 - G01N 19/00 take precedence)

Definition statement

This place covers:

Investigating or analysing materials by the use of optical radiation, i.e. from far-ultraviolet to far-infrared radiation, with a wavelength of 0.1-1000 micrometres (µm), or by visual inspection.

Arrangements or apparatus for facilitating the optical investigation, e.g. cuvettes.

Systems in which incident light is modified in accordance with the properties of the material investigated, e.g. spectral properties of the material.

Systems in which the material investigated is excited whereby it emits light or causes a change in wavelength of the incident light, e.g. photo-luminescence, thermo-luminescence or electro-luminescence.

Systems in which material is subjected to a chemical reaction, the progress or the result of the reaction being optically investigated, e.g. chemo-luminescence.

Visual inspection, e.g. for investigating the presence of flaws, defects or contamination.

Investigating or analysing materials by using other optical effects than those mentioned above.

Relationships with other classification places

Investigation of spectral properties of light per se, or measurements of the properties of materials where spectral properties of light are sensed and primary emphasis is placed on creating, detecting or analysing the spectrum, is classified in G01J 3/00, as opposed to investigating, i.e. testing or determining, the properties of material samples by the use of optical means, where primary emphasis is given to the materials, which is classified in this group.

Testing or determining the properties of structures, e.g. apparatus, machine parts etc, by the use of optical means is classified in the relevant subclass for the structure being tested, as opposed to investigating, i.e. testing or determining, the properties of material samples by the use of optical means, which is classified in this group. In this regard, G01M 11/00 is the residual place for classifying testing of optical apparatus, or testing of structures by optical methods not covered elsewhere.

The low-frequency end of the terahertz (THz) spectrum overlaps the high frequency end of the microwave spectrum.

Whilst THz wave-based analysis is classified in G01N 21/3581, where such analysis relates to methods and apparatus at the high frequency-end of the microwave spectrum and based on (modified-) microwave technology, classification should also be in G01N 22/00.

References

Limiting references

This place does not cover:

Investigating strength properties of solid materials by application of mechanical stress	G01N 3/00
Analysing materials by weighing, e.g. weighing small particles separated from a gas or liquid	G01N 5/00
Analysing materials by measuring the pressure or volume of a gas or vapour	G01N 7/00
Investigating density or specific gravity of materials; analysing materials by determining density or specific gravity	G01N 9/00
Investigating flow properties of materials, e.g. viscosity, plasticity; analysing materials by determining flow properties	G01N 11/00
Investigating surface or boundary effects, e.g. wetting power; investigating diffusion effects; analysing materials by determining surface, boundary, or diffusion effects	G01N 13/00
Investigating characteristics of particles; investigating permeability, pore-volume, or surface-area of porous materials	G01N 15/00
Investigating resistance of materials to the weather, to corrosion, or to light	G01N 17/00
Investigating materials by mechanical methods	G01N 19/00

Application-oriented references

Examples of places where the subject matter of this place is covered when specially adapted, used for a particular purpose, or incorporated in a larger system:

Investigation of spectral properties of light per se, or measurements of the properties of materials where spectral properties of light are sensed and primary emphasis is placed on creating, detecting or analysing the spectrum, providing that the properties of the materials to be investigated are of minor importance	G01J 3/00
Contactless testing of electronic circuits using optical radiation	G01R 31/308

Informative references

Attention is drawn to the following places, which may be of interest for search:

Sampling; preparing specimens for investigation	G01N 1/00
Thermography	G01N 25/72
Optoacoustic interaction with the material	G01N 29/2418
Gassensors with chemical indicators	G01N 31/223
Specific materials	G01N 33/00
Automatic analysis; handling materials therefore	G01N 35/00
In-vivo (human body or animal) measurements	A61B 5/00

Computer tomography (medical)	A61B 6/00
Biochips	B01J 19/0046
Chemical or physical apparatus for general laboratory use, e.g. glassware, including sample holders	B01L, B01L 3/00
Cuvettes of small dimensions, capillary cells, microfluidic devices	B01L 3/5027
Microtitration plates, microarrays	B01L 3/5085
Optical rain sensors for cars	B60S 1/0833
Measuring or testing processes involving nucleic acids	C12Q 1/68
Moisture content of paper	D21F 7/003
Use of optical means for measuring roughness or irregularity of surfaces, or for measuring deformation in a solid	G01B 9/00, G01B 11/00
Photometry, i.e. measuring intensity of light regardless of its wavelength or polarization	G01J 1/00
Special light sources	G01J 3/10
Polarisation spectrometry	G01J 3/447
Measurement of colour	G01J 3/46
Measurement of colour using colour charts	G01J 3/52
Measuring polarization of light	G01J 4/00
Optical radiation pyrometry	G01J 5/00
Measuring force or stress by measuring variations of optical properties of material when it is stressed, e.g. by photo-elastic stress analysis	G01L 1/24
Testing of optical apparatus, elements and systems; testing structures by optical methods not otherwise provided for (see also Relationships between large subject matter areas, above)	G01M 11/00
Testing of optical fibres	G01M 11/30
Systems for direction-finding, navigation, locating, presence-detecting using the reflection or reradiation of light waves, e.g. lidar systems	G01S 17/00
Prospecting or detecting by the use of optical means	G01V 8/00
Optical elements of measuring instruments, e.g. microscopes	G02B, G02B 21/00
Optical fibres	G02B 6/00
Image analysis	G06T 7/00
Smoke detectors	G08B 17/107

Special rules of classification

The EC classes are used for invention information.

The Indexing Codes G01N 21/00 are used for additional information.

The Indexing Codes G01N 2201/00 are used for features of devices only if the device is classified in G01N 21/00.

G01N 21/03; 2-dimensional sample arrays and multiwell plates: classify only in the subgroup according to the measurement method (G01N 21/253 or G01N 21/6452)

G01N 21/256; if the light sources emit different wavelengths: classify only in G01N 21/3151

G01N 21/274; also used for calibration of fluorescence measurements or calibration of diffraction measurements

G01N 21/39; also cavity-ring-down-spectroscopy

G01N 21/43; refractometers based on total internal reflection

G01N 21/4788; if the grating is coated with a reagent (chemical indicator): classify only in G01N 21/774 or G01N 21/7743

G01N 21/4795; This subgroup comprises 3-dimensional imaging and optical coherence tomography;

in-vivo applications: classify only in A61B

G01N 21/53; investigation of granular solids: classify only in G01N 21/85

G01N 21/552; if the reflection takes place along an reagent-clad optical fibre or optical waveguide: classify only in G01N 21/7703

G01N 21/553; if fluorescence is excited and detected: classify only in G01N 21/648

if Raman scattering is detected: classify only in G01N 21/658

G01N 21/61;

analysis of gases with infrared radiation: classify only in G01N 21/3504

G01N 21/6428;

fluorescent labels or fluorescent particles per se (molecular structure): classify only in C09K or C07D

G01N 21/6486; biological material without label

G01N 21/65; apparatus for measuring Raman scattering: classify only in G01J 3/44

G01N 21/71; also laser-excited

G01N 21/718; also laser induced breakdown spectroscopy

G01N 21/7703; also optodes/optrodes

G01N 21/783; If the emphasis is on chemical aspects: classify only in G01N 31/223

Glossary of terms

In this place, the following terms or expressions are used with the meaning indicated:

Terahertz (THz) waves	Electromagnetic waves having a frequency between the high-frequency edge of the microwaveband (approx. 300 GHz) and the long wavelength edge of the far-infrared (approx. 3THz). Can also be referred to as sub-millimeter waves or T-rays.
LIDAR (Light Detection and Ranging)	An optical remote sensing technology that can measure the distance to, or other properties of, targets by illuminating the target with laser light and analyzing the backscattered light

G01N 21/07

Centrifugal type cuvettes (G01N 21/09 takes precedence)

References

Limiting references

This place does not cover:

Resist hostile environments or corrosive or abrasive materials	G01N 21/09

Informative references

Attention is drawn to the following places, which may be of interest for search:

Centrifuges per se	B04B

G01N 21/51

inside a container, e.g. in an ampoule (G01N 21/53 takes precedence)

References

Limiting references

This place does not cover:

Within a flowing fluid, e.g. smoke	G01N 21/53

Informative references

Attention is drawn to the following places, which may be of interest for search:

Checking containers for cleanliness	B08B 9/46

G01N 21/53

within a flowing fluid, e.g. smoke

References

Informative references

Attention is drawn to the following places, which may be of interest for search:

Alarm devices actuated by smoke	G08B 17/10

G01N 21/67

using electric arcs or discharges

References

Informative references

Attention is drawn to the following places, which may be of interest for search:

Spark gaps	H01T

G01N 21/84

Systems specially adapted for particular applications

Definition statement

This place covers:

Spectroscopy and optical systems and methods as defined in the appended groups. The intended use determines apparatus or method details making up the invention, such as those related to measurements in industrial or agricultural environments.

Relationships with other classification places

G01N 21/84 and subgroups represent an application-oriented classification approach to the spectroscopical techniques ranging from the infrared to the ultraviolet in G01N 21/00 - G01N 21/83.

References

Informative references

Attention is drawn to the following places, which may be of interest for search:

Sorting according to opt. properties	B07C 5/342
Testing dynamic or balance of machines or structures	G01M
Image processing	G06T

Special rules of classification

Optical and spectroscopic determination of properties, e.g. presence or absence of determined substances or elements, of particular objects, liquids and gases are classified in groups ranging from G01N 21/84 - G01N 21/87.

Optical inspection of defects and contaminants in manufactured products in general, i.e. deviations from the production standards are classified in G01N 21/88 - G01N 21/958.

An exception is made with respect to the measurement of coatings, in which even those inventions directed to the detection of flaws receive also the G01N 21/8422 class..

G01N 21/8422

{Investigating thin films, e.g. matrix isolation method}

Definition statement

This place covers:

Systems and methods for the optical measurement of properties of thin films, coatings and multilayers, such as e.g. wear of thermal barrier coatings by detecting fluorescence from embedded labels.

References

Limiting references

This place does not cover:

Thickness measurement of coatings	G01B 11/0616

Informative references

Attention is drawn to the following places, which may be of interest for search:

Investigating resistance to wear	G01N 3/56
Analysis of materials by ellipsometry	G01N 21/211

G01N 21/8483

{Investigating reagent band (test-element handling not specific to a test method G01N 33/4875; analytical elements specific to chemical analysis of biological material G01N 33/52; autometer with reagent band G01N 35/04)}

Definition statement

This place covers:

Systems and methods in which the condition of a sample is optically determined by detection of changes of reagent present on a substrate such as a test strip with e.g. reagent pads, or a reagent band.

References

Limiting references

This place does not cover:

Details of e.g. test-element handling, dispensing and storage , not specific to a particular test method	G01N 33/4875
Test elements involving biospecific methods for chemical analysis of biological material	G01N 33/54386
Details of conveyor system for automatic analysis not limited to methods or materials provided in groups G01N 1/00 - G01N 33/00, e.g. for autometers using reagent band	G01N 35/04
Test elements per se in	B01L

Informative references

Attention is drawn to the following places, which may be of interest for search:

Details of colorimeters	G01N 21/255
Systems in which sample is subject to chemical reaction with use of dipsticks or test strips	G01N 2021/7759
Automatic analysis with flat sample substrates	G01N 35/00029
Taking blood samples percutaneously, e.g. lancet	A61B 5/1411
Sample transported and stored in absorbent	**B01L3/00C6A**
Measurement of colour	G01J 3/46
Medical informatics	**G06F19/00M**
Miscellaneous aspects of diffuse reflection measurement applied to analytical test strips	**S01N21/483C**

G01N 21/85

Investigating moving fluids or granular solids

Definition statement

This place covers:

Systems especially adapted for measuring spectral properties and contaminants of solids such as grains, ore, flour, etc., gases such as fuels, and liquids like e.g. water. The target material is moving, flowing, falling e.g. on conveyors, in chutes, ducts, pipelines, etc.

Illustrative examples of subject matter classified in this group.

EP1892520

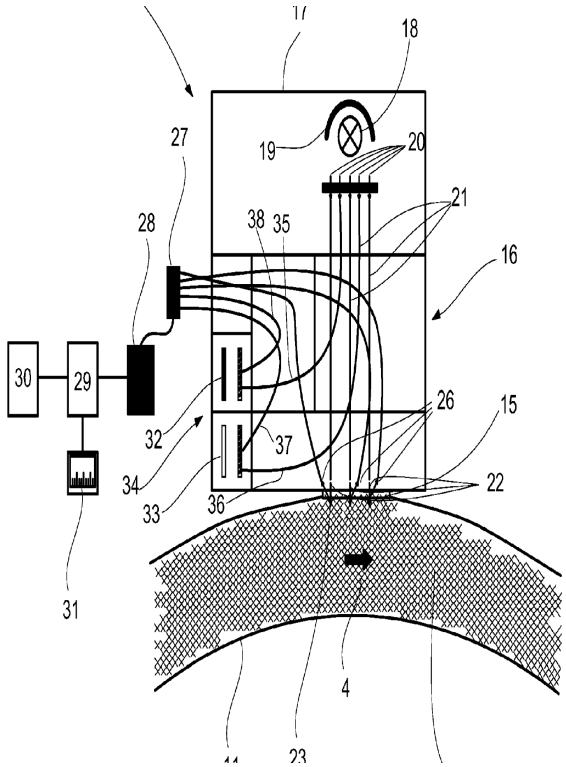

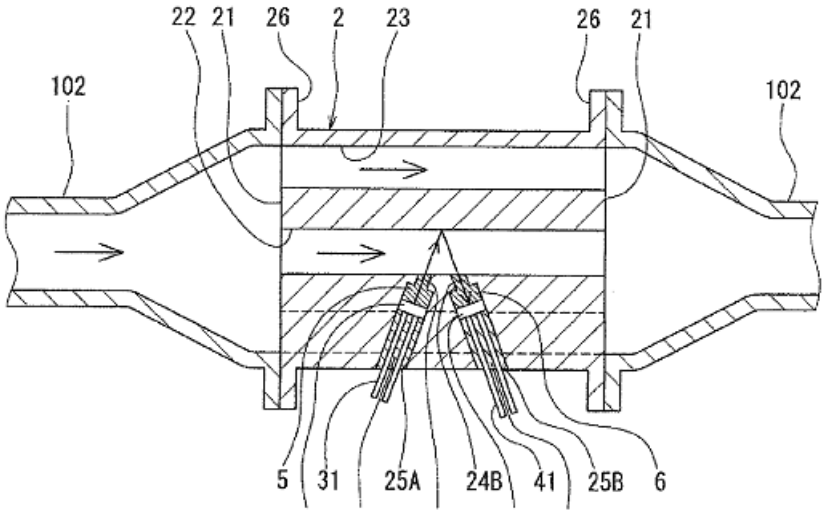

US2008282779

References

Limiting references

This place does not cover:

Flow cytometry	G01N 15/14
Contamination in the liquid content of containers, e.g. bottles	G01N 21/9027
Investigation of beverages, fuel, water, etc. by other methods not covered in the groups G01N 1/00- G01N 31/00	G01N 33/00
Sorting granular material according to optical props.	B07C 5/3427

Informative references

Attention is drawn to the following places, which may be of interest for search:

Accessories for mixers: measuring colour of mixtures	B01F 15/00207

G01N 21/8507

{Probe photometers, i.e. with optical measuring part dipped into fluid sample}

Definition statement

This place covers:

Inventions in which optical and constructional details are specifically adapted to enable the device penetration in the medium to be measured.

Illustrative examples of subject matter classified in this group.

US2005264816

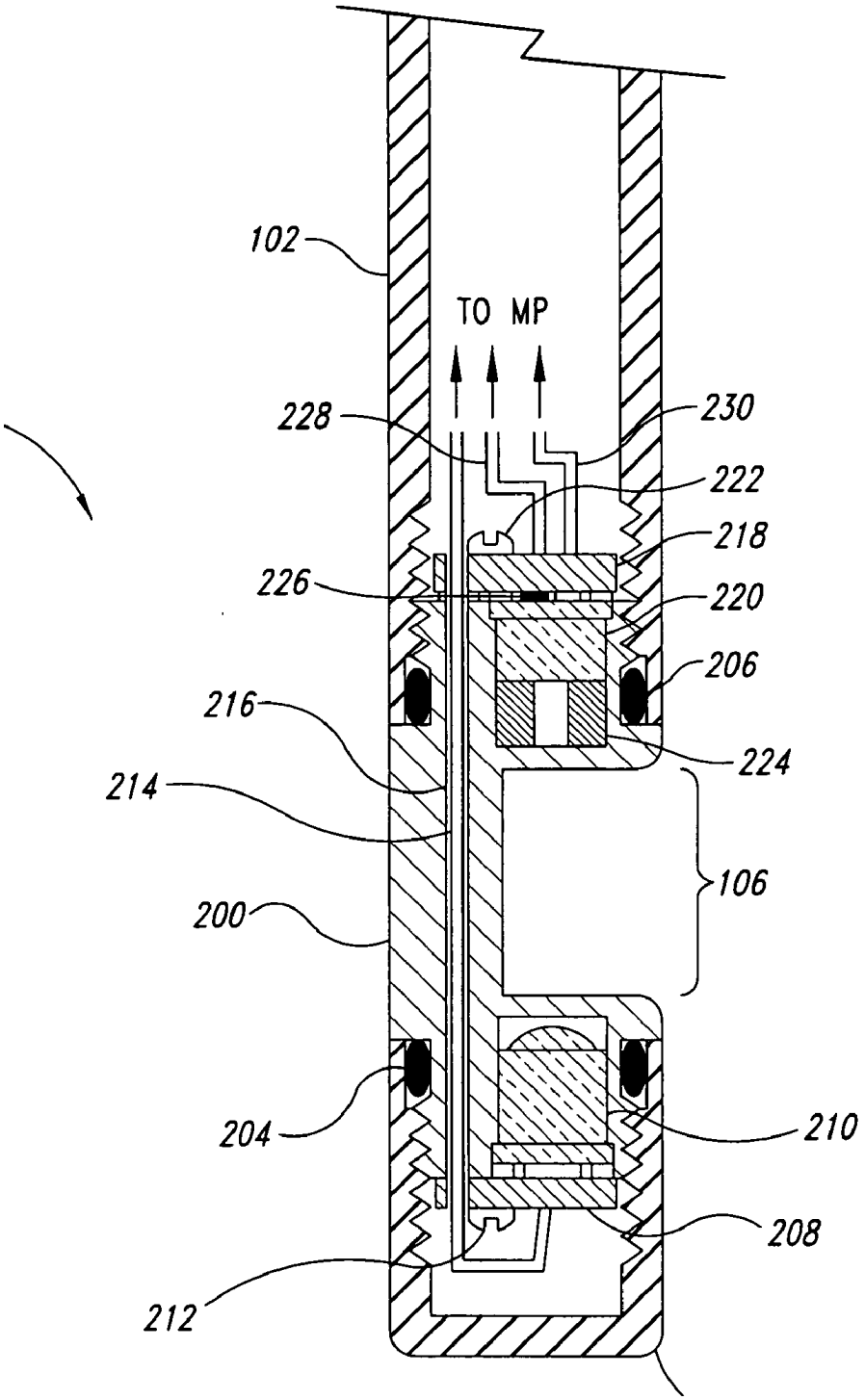

WO2005003728

2/5

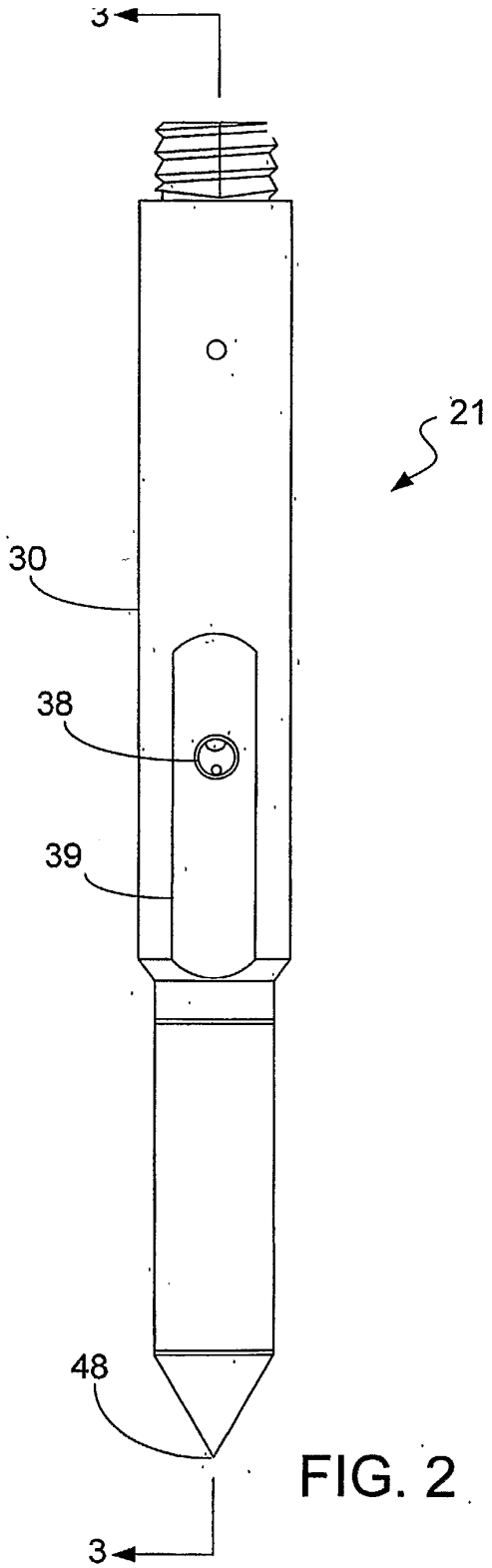

FIG. 2

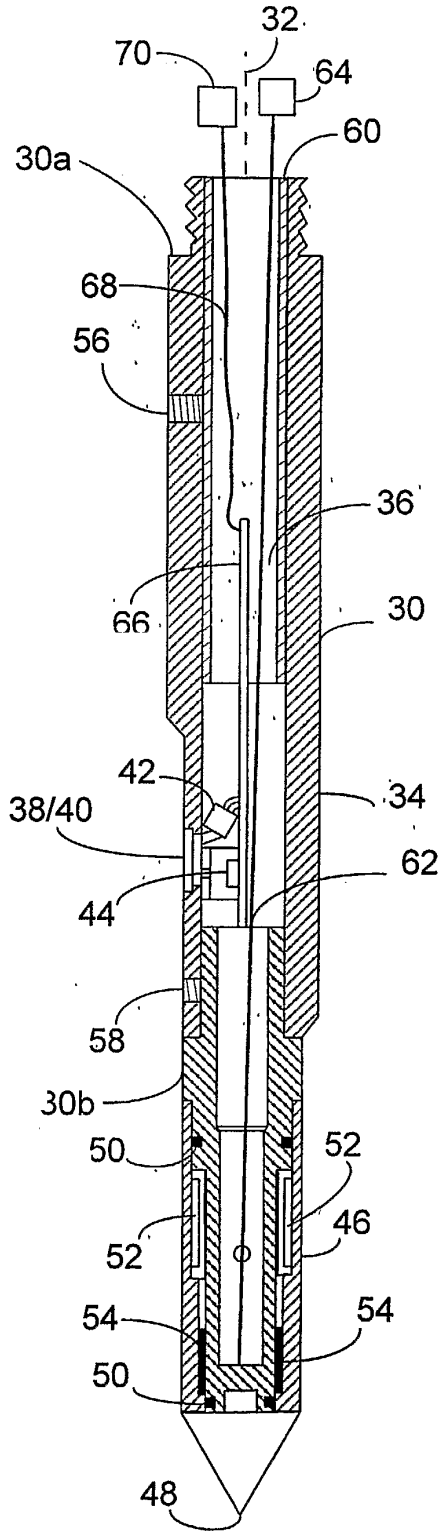

FIG. 3

References

Limiting references

This place does not cover:

Testing borehole walls	E21B 49/00

Informative references

Attention is drawn to the following places, which may be of interest for search:

Immersion refractometers, e.g. with dipped optical fibre	G01N 21/431

G01N 21/86

Investigating moving sheets (G01N 21/89 takes precedence)

Definition statement

This place covers:

Systems and methods in which properties are optically probed, such as e.g. moisture content by infrared detection in conveyed paper sheet.

References

Limiting references

This place does not cover:

Investigating moving reagent band	G01N 21/8483
Investigating the presence of flaws or contamination in moving material, e.g. paper web	G01N 21/89

Informative references

Attention is drawn to the following places, which may be of interest for search:

Determination of moisture with infrared light	G01N 21/3554
Indicating moisture content of paper	D21G 9/0009

G01N 21/87

Investigating jewels (G01N 21/88 takes precedence)

References

Limiting references

This place does not cover:

Investigating the presence of flaws or contamination	G01N 21/88

Informative references

Attention is drawn to the following places, which may be of interest for search:

Investigation of gemstones, pearls, etc. by methods not covered by previous groups	G01N 33/381
Settings for holding gems	A44C 17/02

Special rules of classification

Precedence rule in group title is obsolete

G01N 21/88

Investigating the presence of flaws or contamination

Definition statement

This place covers:

Systems for monitoring and detecting the presence of defects and contamination.

References

Limiting references

This place does not cover:

Determination of dimensions, roughness, curvature	G01B 11/00
Testing machines and apparatus	G01M

G01N 21/8803

{Visual inspection (measuring projectors G01B 9/08)}

Definition statement

This place covers:

Inventions in which visual inspection of human operator is foreseen. Detection of the light primarily effected by the human eye.

References

Limiting references

This place does not cover:

Measuring instruments characterised by optical measuring means	G01B 9/00
Optical projection comparators	G01B 9/08

G01N 21/8806

{Specially adapted optical and illumination features}

References

Limiting references

This place does not cover:

Optical details, scanning details in moving materials	G01N 21/8901

G01N 21/89

in moving material, e.g. running paper or textiles (G01N 21/90, G01N 21/91, G01N 21/94 take precedence)

Definition statement

This place covers:

Optical inspection of running yarn, fabric, web such as paper, cardboard, plastic film, etc. Other continuously or quasi-continuously cast raw material such as wood, metal, glass, etc. are also considered within this group and its sub-groups.

References

Limiting references

This place does not cover:

Inspecting a container or its contents	G01N 21/90
Inspecting the exterior surface of ropes, wires, etc.	G01N 21/952

Informative references

Attention is drawn to the following places, which may be of interest for search:

Investigating paper	G01N 33/34
Warning of web breakage in running webs	B65H 26/025
Paper-making control systems	D21G 9/0009

Special rules of classification

Precedence rules in group title regarding G01N 21/91 and G01N 21/94 are obsolete.

G01N 21/8901

{Optical details; Scanning details (per se G02B)}

References

Limiting references

This place does not cover:

Scanning details per se	G02B

G01N 21/8915

{non-woven textile material}

Definition statement

This place covers:

Optical inspection of yarn, fibre, thread, etc.

References

Limiting references

This place does not cover:

Measuring diameters with photoelectric sensors	G01B 11/105

Informative references

Attention is drawn to the following places, which may be of interest for search:

Inspecting the exterior surface of cylindrical bodies or wires	G01N 21/952
Analysis of filiform textiles by specific methods not covered by the groups G01N 1/00 - G01N 31/00	G01N 33/365
Warning devices for yarn pre-treatment: detection and removal of impurities	D01G 31/003
Spinning or twisting machines: warning of irregularities in running material	D01H 13/22
Arrangements facilitating the inspection of yarns	D01H 13/26

G01N 21/8916

{for testing photographic material}

References

Informative references

Attention is drawn to the following places, which may be of interest for search:

Noise or error suppression during scan of photo-films	H04N 1/58

G01N 21/894

Pinholes

Definition statement

This place covers:

Inventions for detecting the presence of minute through holes (pinholes) in the materials under inspection. Pinholes are considered as defects, thus inventions for inspecting the quality of holes or of arrays of holes are not classified here.

References

Limiting references

This place does not cover:

Defects in coatings	G01N 21/8422
Defects in wafers	G01N 21/9501
Inspection of patterns showing hole parts	G01N 21/95692

G01N 21/896

Optical defects in or on transparent materials, e.g. distortion, surface flaws {in conveyed flat sheet or rod (for other objects G01N 21/958)}

Definition statement

This place covers:

Inventions dealing with the inspection for optically detectable defects in transparent material, such as running glass or plastic sheet, rod, etc.

References

Limiting references

This place does not cover:

Inspection of transparent containers	G01N 21/90
Inspection of defects in transparent objects characterised by having particular external shapes or which are not continuously or quasi-continuously cast	G01N 21/958

Informative references

Attention is drawn to the following places, which may be of interest for search:

Conveyors for fragile sheets, e.g. glass	B65G 49/06
Measuring stress by optical means	G01L 1/24

G01N 21/898

Irregularities in textured or patterned surfaces, e.g. textiles, wood

References

Limiting references

This place does not cover:

Devices for scanning printed matter for quality control	B41F 33/0036

G01N 21/8983

{for testing textile webs, i.e. woven material}

References

Limiting references

This place does not cover:

Investigation of fabric or woven textiles by methods not covered by G01N 1/00 - G01N 31/00	G01N 33/367
Auxiliary apparatus combined or associated with looms	D03J 1/00

Informative references

Attention is drawn to the following places, which may be of interest for search:

Inspection of textile materials	D06H 3/00

G01N 21/90

in a container or its contents (G01N 21/91 takes precedence)

Definition statement

This place covers:

Inventions for inspecting bottles, flasks, carafes, cups, phials, cans, jars, kegs, and other similar receptacles.

References

Limiting references

This place does not cover:

Inspection of the inner walls of tanks, cisterns, vessels, etc.	G01N 21/954
Optical means for sorting bottles in accordance to size	B07C 5/126
Sorting according to properties of containers	B07C 5/3404
Measuring liquid level with light	G01F 23/292

Special rules of classification

Precedence rule in group title is obsolete

If suitable classify the inventions additionally in Indexing Code G01N 2021/9063 (Hot-end container inspection).

Classify additionally in G01N 21/8851 the inventions which are characterised by special signal processing.

G01N 21/9009

{Non-optical constructional details affecting optical inspection, e.g. cleaning mechanisms for optical parts, vibration reduction}

Definition statement

This place covers:

Inventions dealing with non-optical aspects of the optical inspection, such as protections from dirt (e.g. DE2904126, cover plate 6, wiper blade 13), mechanisms for container spacing or handling during inspection (e.g. DE3621976, clamping mechanism 2, 4), anti-vibration arrangements for the optics or the container manipulator (e.g. JP1224651, mounting of camera 6), etc.

Illustrative examples of subject matter classified in this group:

DE2904126

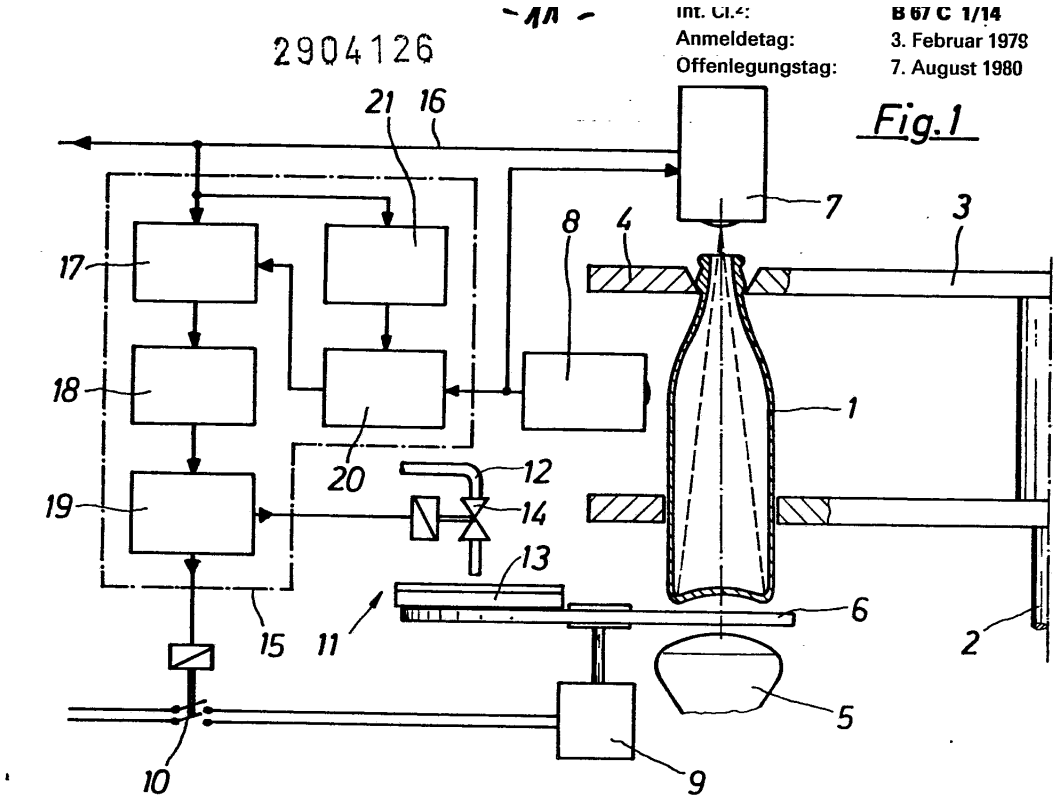

DE3621976

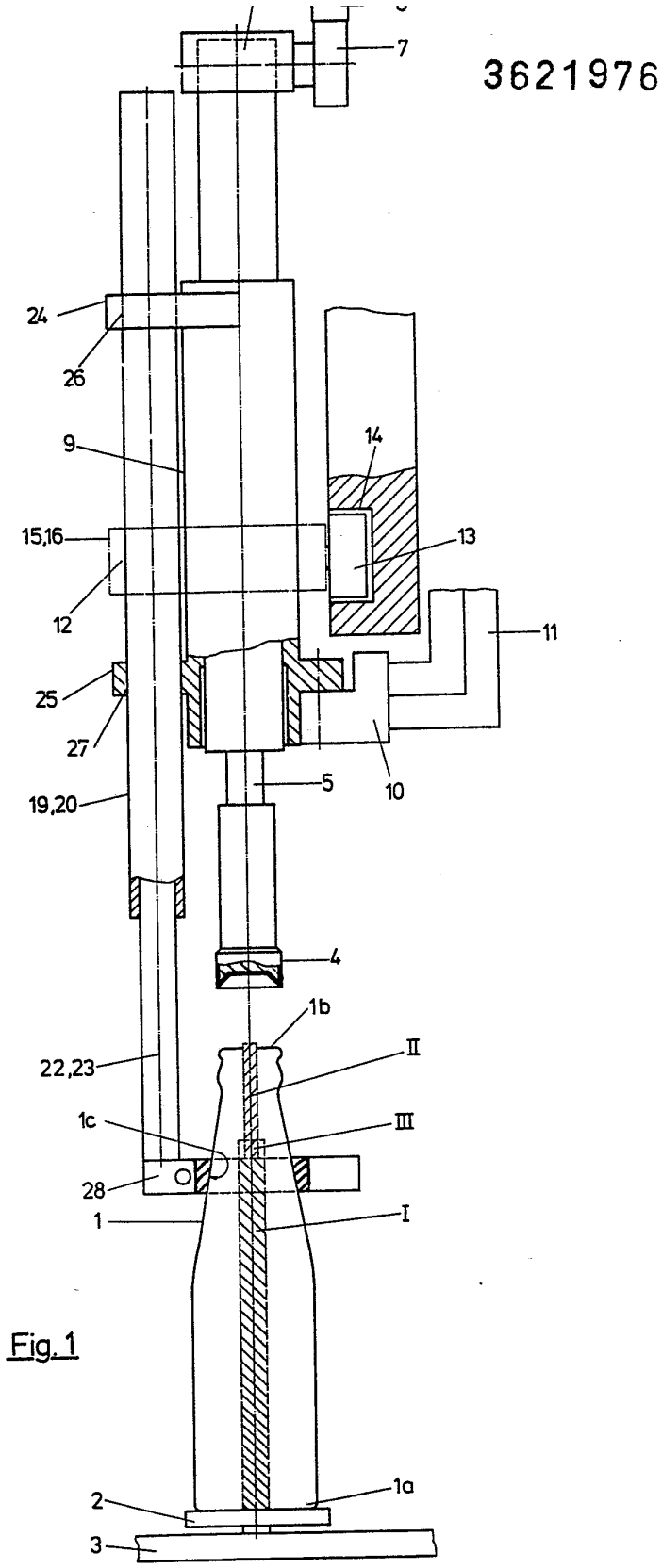

Fig. 1

JP1224651

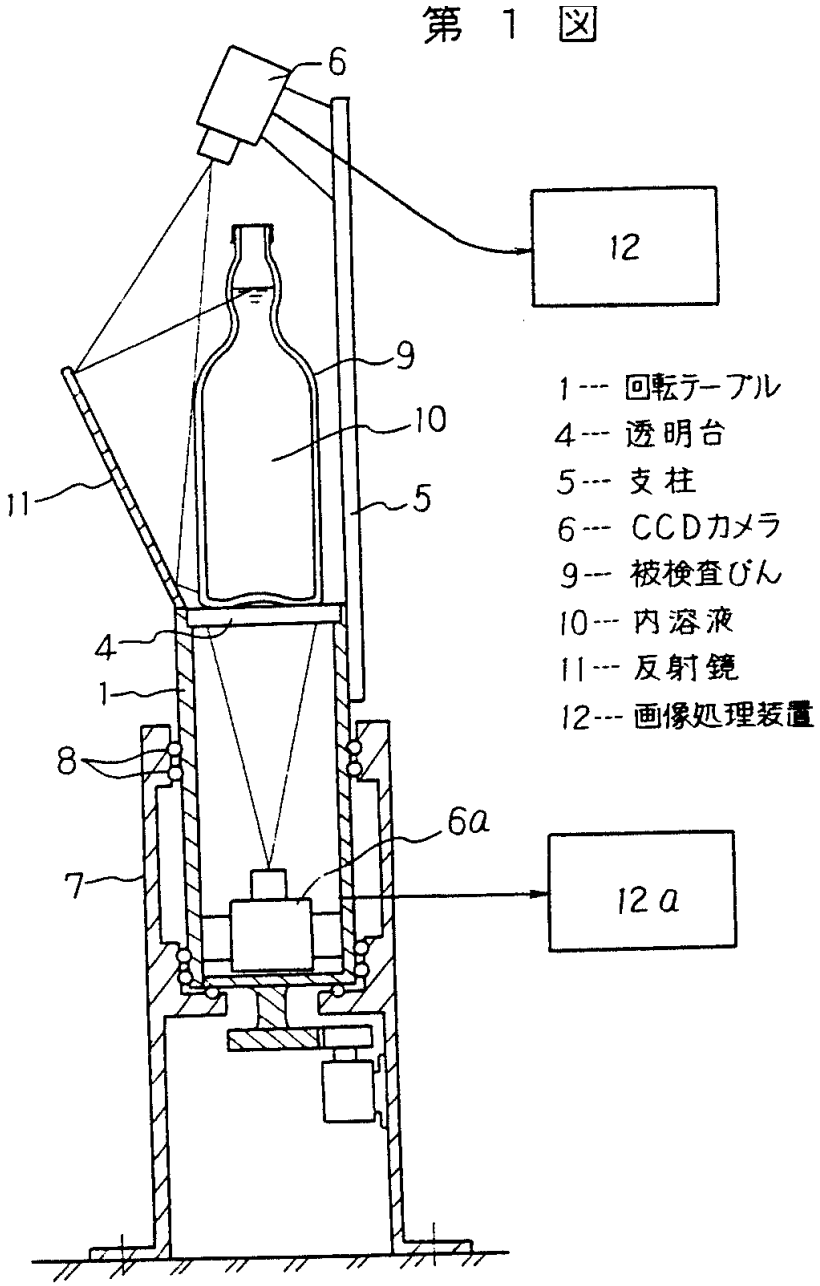

G01N 21/9036

{using arrays of emitters or receivers}

Definition statement

This place covers:

Inventions in which a plurality of emitters / receivers is employed in order to concurrently obtain views of a container portion from different perspectives. Inventions basing on the use of multiple detectors for providing views of different container portions are not classified here.

Illustrative examples of subject matter classified in this group:

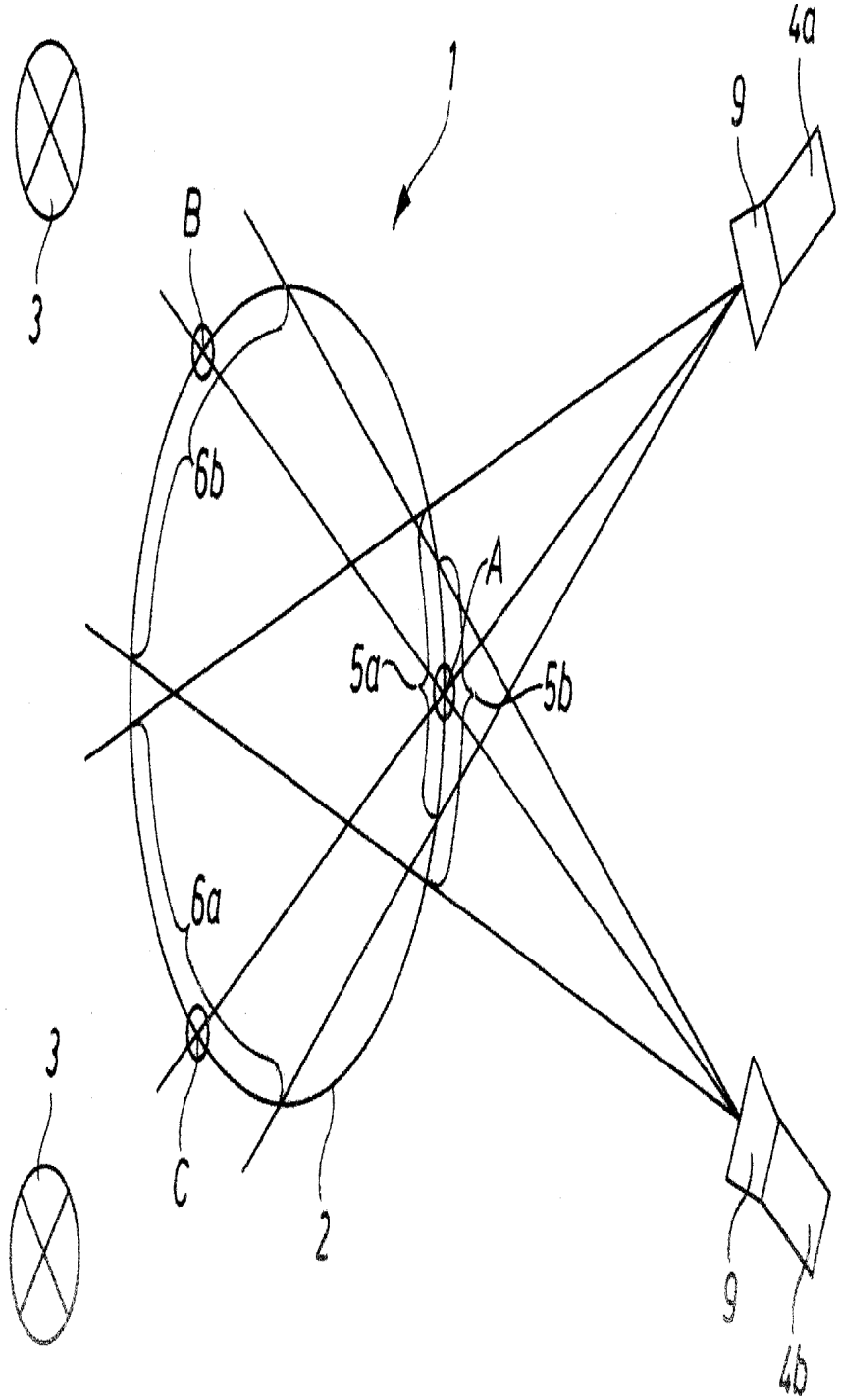

WO2010/100026

This applies also to inventions in which the plurality is formed by a single emitter/detector in combination with multiple reflectors to provide said multiplicity of perspectives (e.g. US5495330, reflectors 16, 17, 18, 20).

US5495330

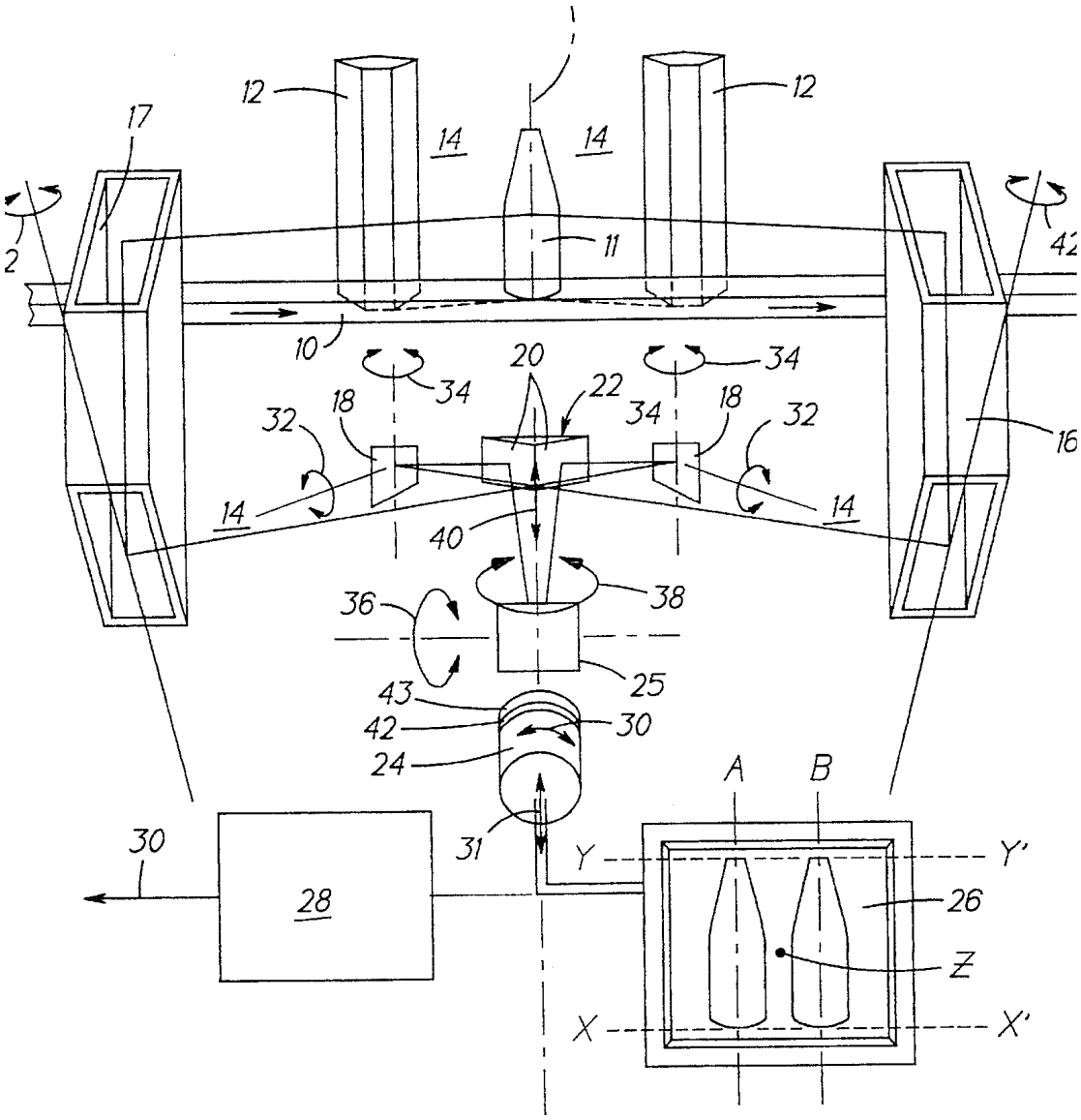

This group also comprises inventions in which a multiplicity of detectors provides subsequent multiple views.

JP55076942

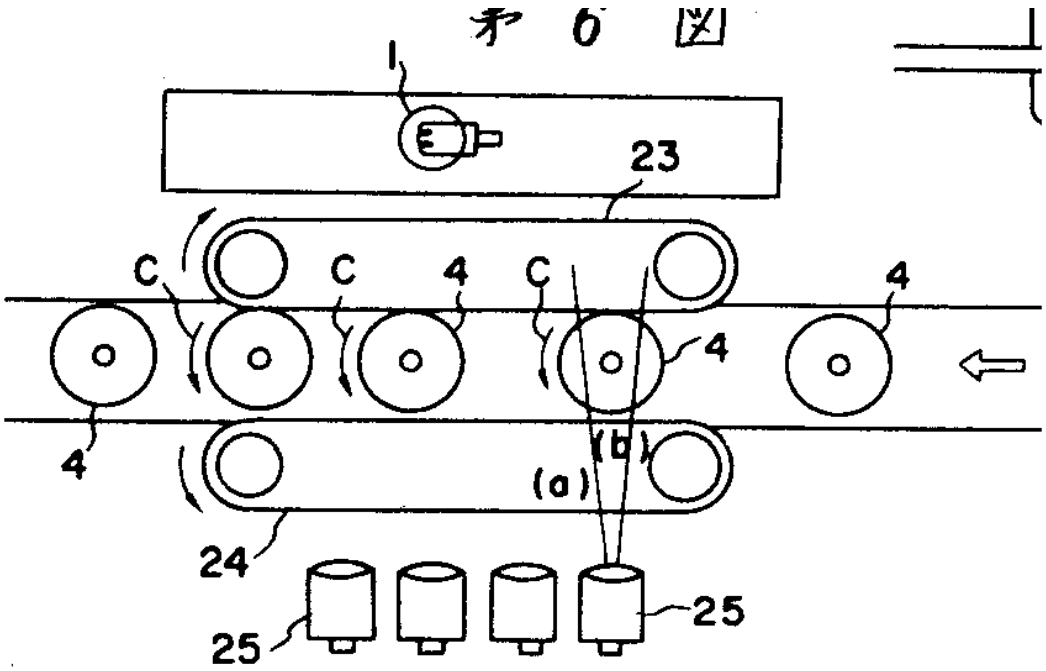

References

Limiting references

This place does not cover:

Inspection of container finish and sealing surface	G01N 21/9054

G01N 21/9045

{Inspection of ornamented or stippled container walls}

Definition statement

This place covers:

Inventions dealing with signals originating from embossing, ornaments, seams, or scratches affecting the container's surface. In some cases aiming the suppression of said signals in order to better detect flaws. In other cases with the objective of inspecting said signals for detecting defects in the embossing, ornaments, degree of scuffing etc.

References

Limiting references

This place does not cover:

Inspection dealing with signals affected by the presence of threads at container finish	G01N 21/9054

Informative references

Attention is drawn to the following places, which may be of interest for search:

Detection of markings at container surface for orienting the container prior to labelling	B65C 9/067

G01N 21/9054

{Inspection of sealing surface and container finish}

Definition statement

This place covers:

Inventions which focus on the inspection of the container finish such as mouth, sealing surface, thread, or parts in its proximity. Devices implementing standard or not specially detailed container finish inspection which is carried out together with inspection of other container parts such as the sidewall or the bottom should not be classified here.

Illustrative examples of subject matter classified in this group:

EP0047936

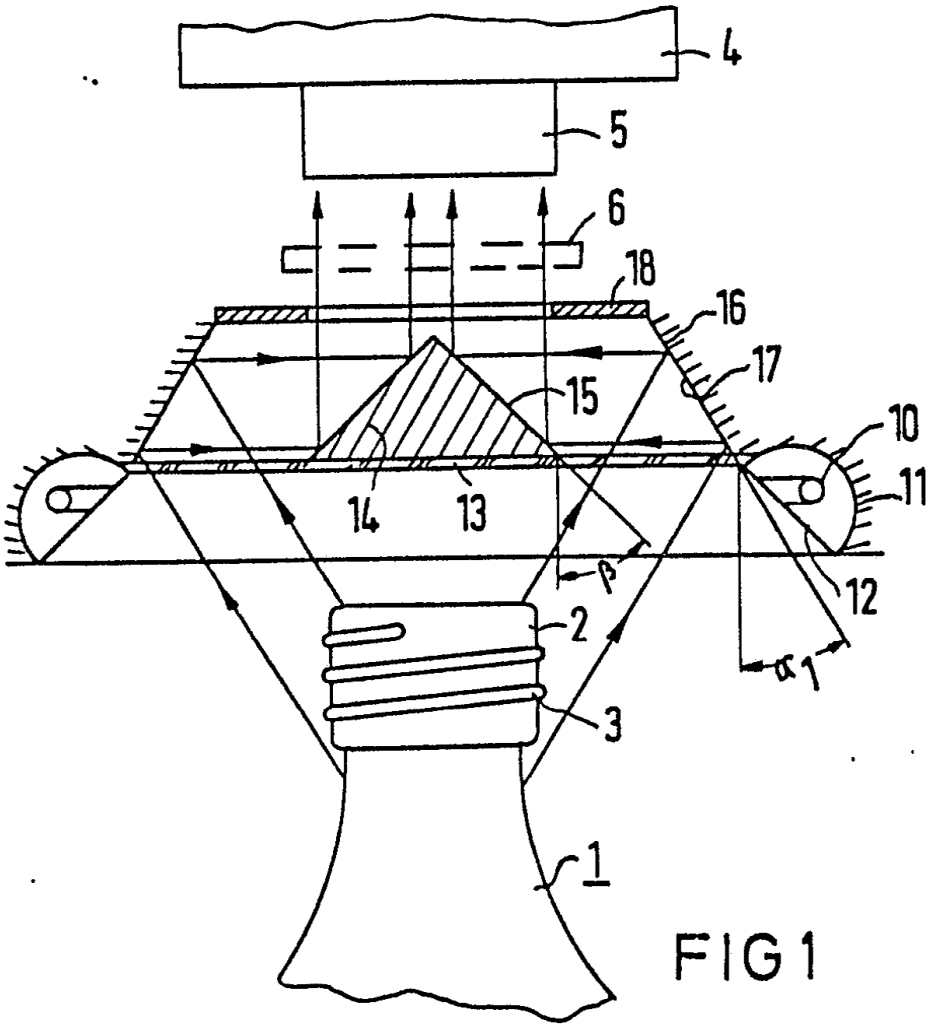

FIG 1

G01N 21/9072

{with illumination or detection from inside the container}

Definition statement

This place covers:

Illustrative examples of subject matter classified in this group:

EP0047936

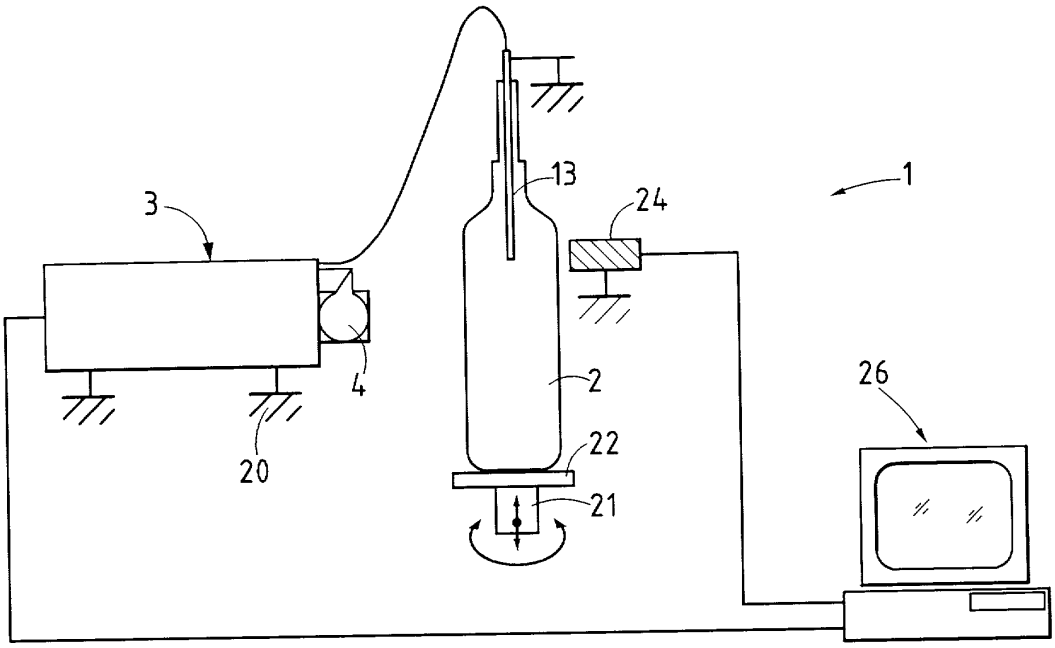

JP2010141

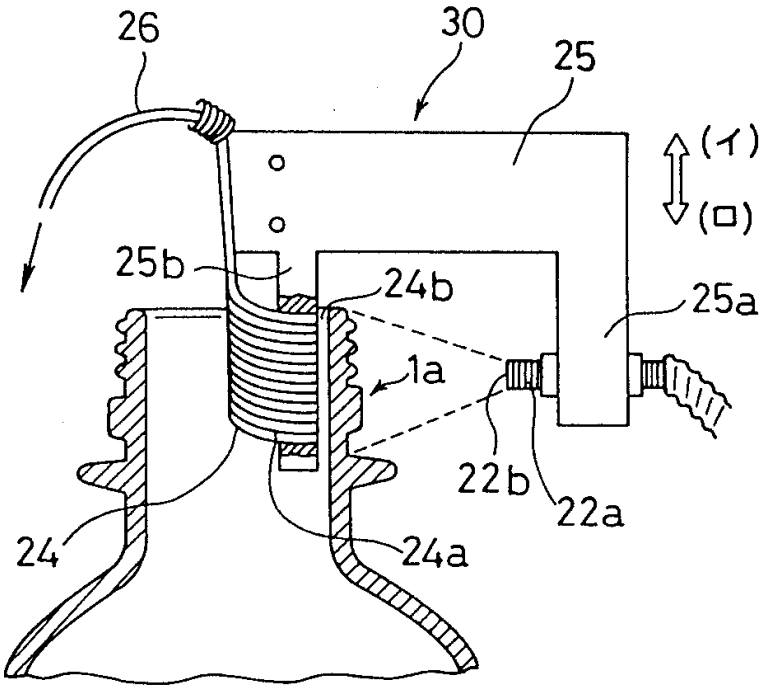

第 3 図

G01N 21/9081

{Inspection especially designed for plastic containers, e.g. preforms}

Definition statement

This place covers:

Inventions which are specifically defined for the inspection of plastic containers. Inventions which indistinctly find application to plastic as well as to glass containers should not be classified here.

G01N 21/909

{in opaque containers or opaque container parts, e.g. cans, tins, caps, labels}

Definition statement

This place covers:

Inventions dealing with the inspection of containers which are not transparent to visible light (e.g. cans, US6022124). Inventions concerning the inspection of other opaque parts normally in connection with containers such as caps (e.g. WO03016886), corks (e.g. US2008180111), etc. are also classified here.

Illustrative examples of subject matter classified in this group:

US6022124

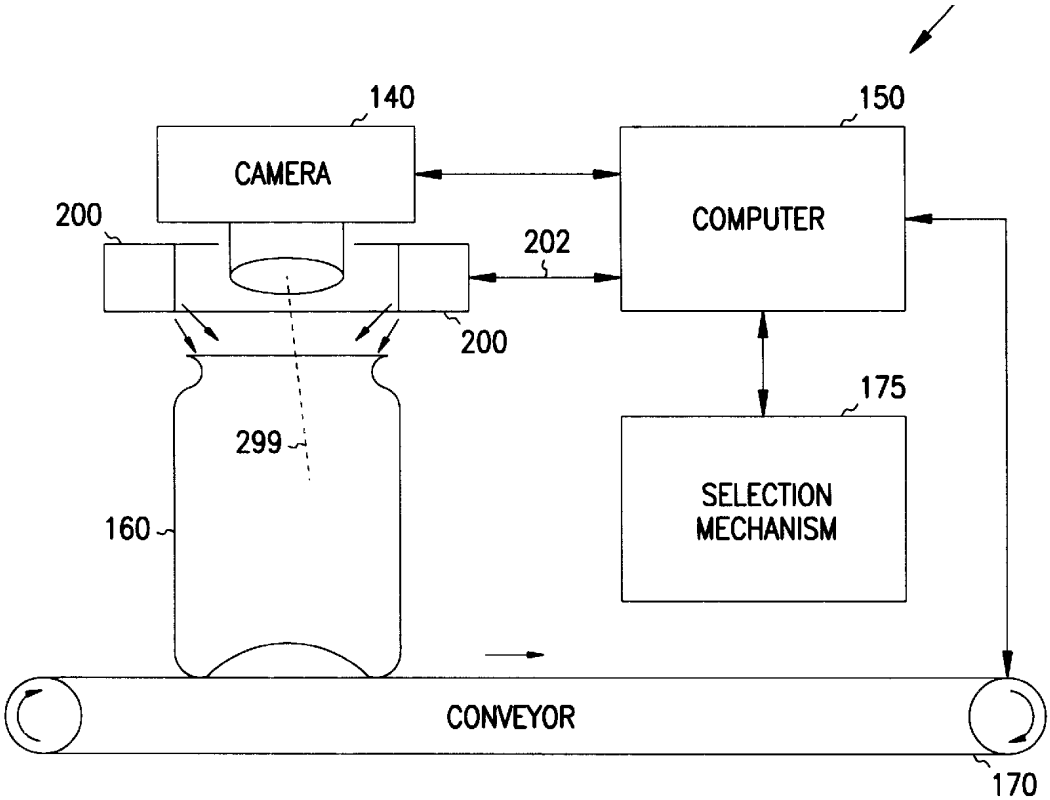

WO03016886

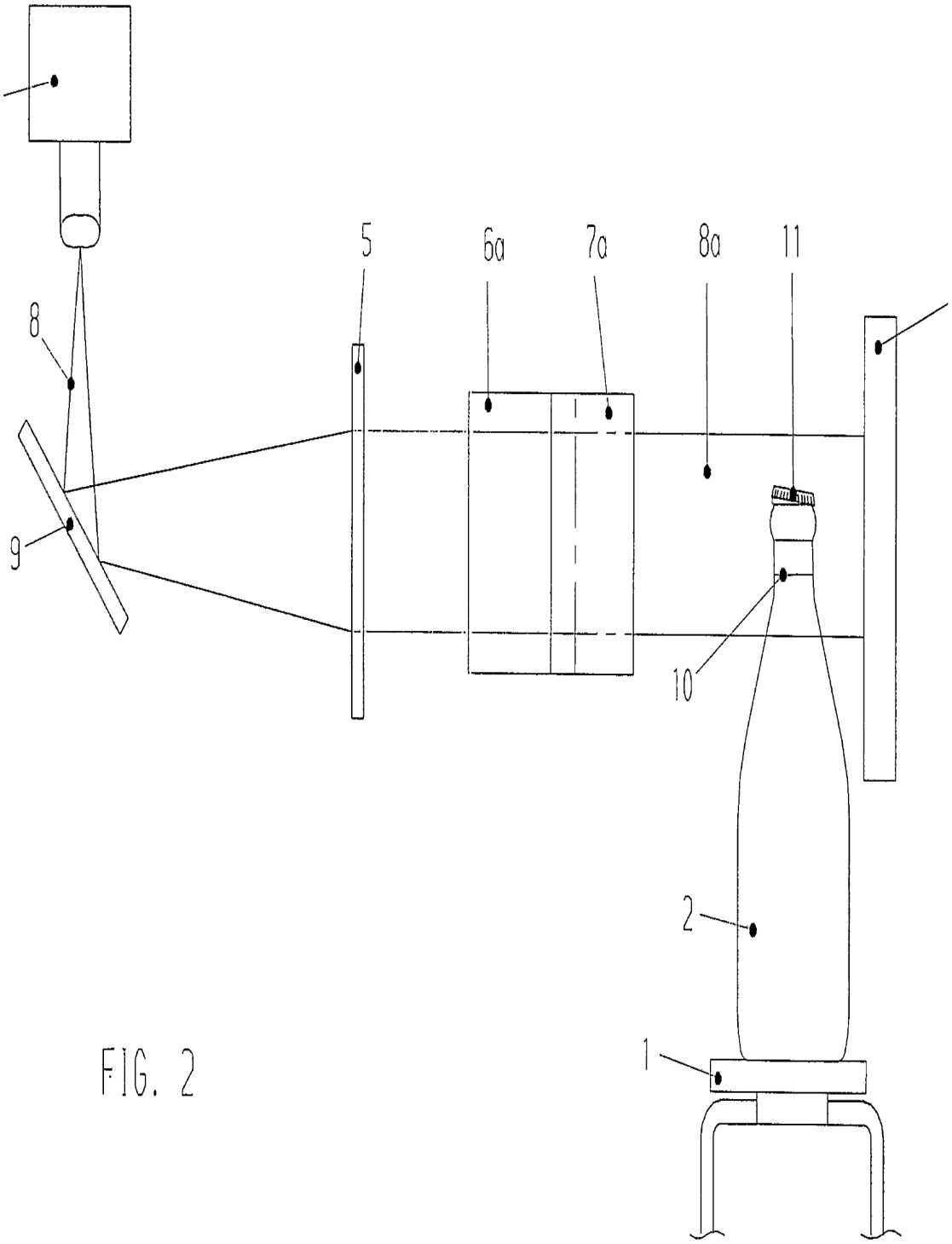

FIG. 2

US2008180111

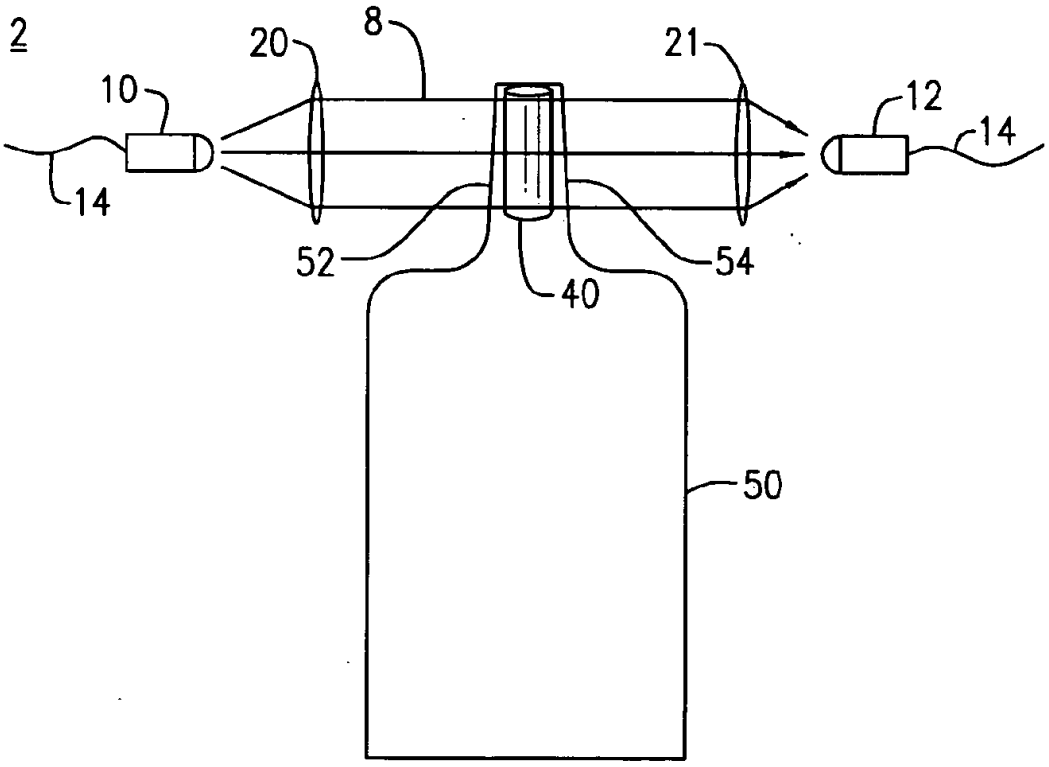

G01N 21/9501

{Semiconductor wafers (manufacturing processes per se of semiconductor devices implementing a measuring step H01L 22/10)}

Definition statement

This place covers:

Inventions dealing with the inspection of semiconducting wafer material.

Relationships with other classification places

Manufacturing processes per se of semiconductor devices implementing a measuring step are classified under **H01L21/66**.

References

Informative references

Attention is drawn to the following places, which may be of interest for search:

Inspection of patterns on the surface of wafers	G01N 21/956

G01N 21/9508

{Capsules; Tablets}

References

Informative references

Attention is drawn to the following places, which may be of interest for search:

Medicinal preparations	G01N 33/15
Presence, absence, abnormal feed, etc. in wrapped material (e.g. tablets in blister packages)	B65B 57/10

G01N 21/951

{Balls}

Definition statement

This place covers:

Inspection of objects presenting spherical or approximately spherical shape, such as golf balls, eggs, bearings, etc.

G01N 21/9515

{Objects of complex shape, e.g. examined with use of a surface follower device (measuring contours and curvatures G01B 11/24)}

Definition statement

This place covers:

Examples of inventions covered by this group are given by the following documents:

US2009190824

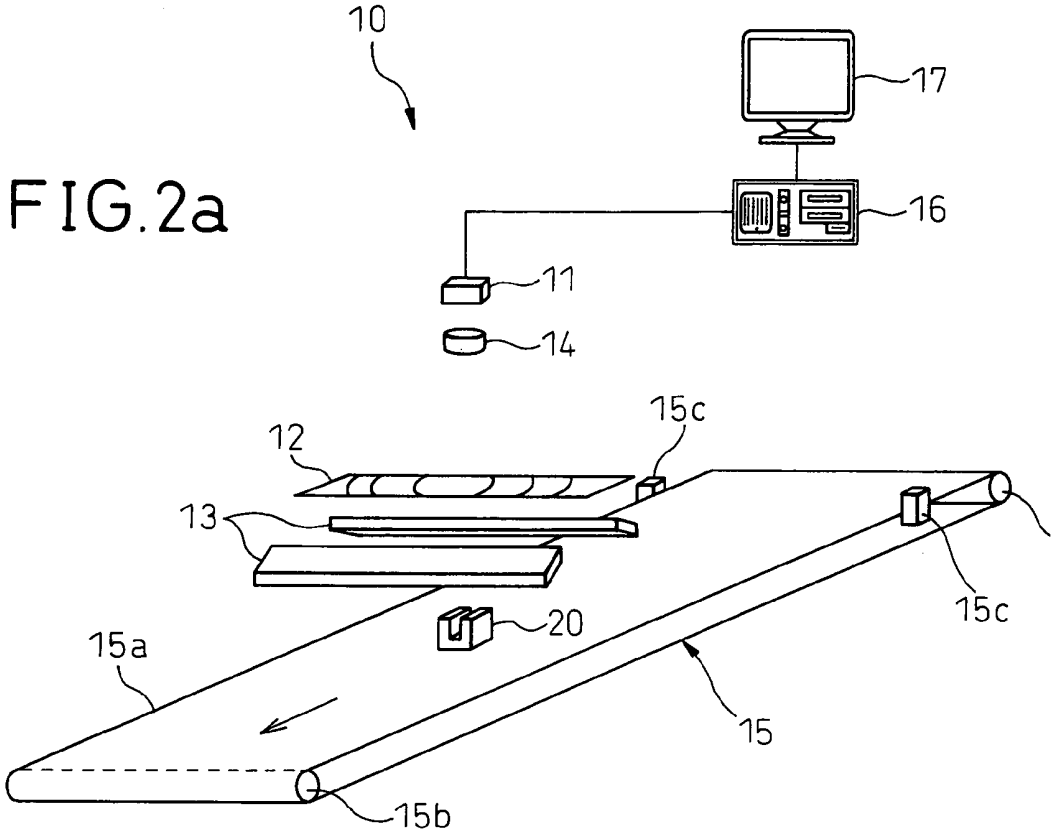

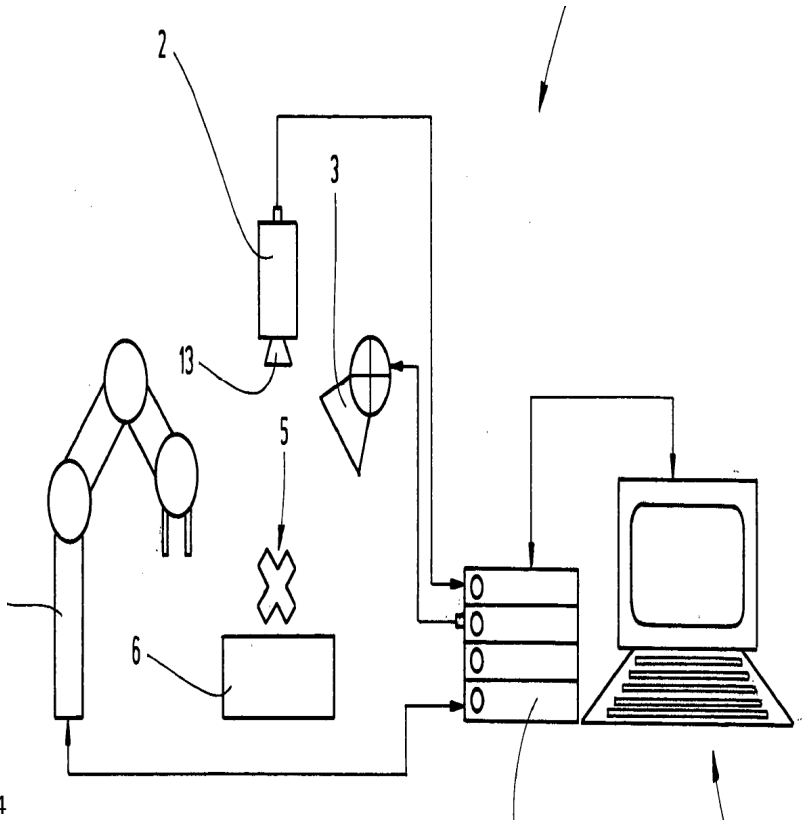

DE102008027904

References

Limiting references

This place does not cover:

Arrangements with optical means for measuring contours or curvatures	G01B 11/24

G01N 21/952

Inspecting the exterior surface of cylindrical bodies or wires (G01N 21/956 takes precedence)

Definition statement

This place covers:

Inventions dealing with the inspection of the outer surface of cylindrical and other elongated objects presenting some kind of axial symmetry, such as e.g. cables, pipes, cigarettes, beams, bobbins, etc.

References

Limiting references

This place does not cover:

Inspection of non-woven textile material, e.g. yarn	G01N 21/8915
Inspection of continuous or quasi-continuous rods of material transparent to visible light	G01N 21/896
Inspection of cylindrical articles transparent to visible light	G01N 21/958

Informative references

Attention is drawn to the following places, which may be of interest for search:

Examination of cigarettes by light	A24C 5/3412
Checking, lubricating, or cleaning of ropes and cables in lifts in or associated with buildings	B66B 7/12

Special rules of classification

Precedence rule in group title is obsolete

G01N 21/954

Inspecting the inner surface of hollow bodies, e.g. bores

Definition statement

This place covers:

Inventions for inspecting general inner surfaces, such as those of tanks, cisterns, pipes, etc. but also of other bodies presenting bores and hollow parts such as nuts, tyres, etc.

Illustrative examples of subject matter classified in this group:

WO2010005399

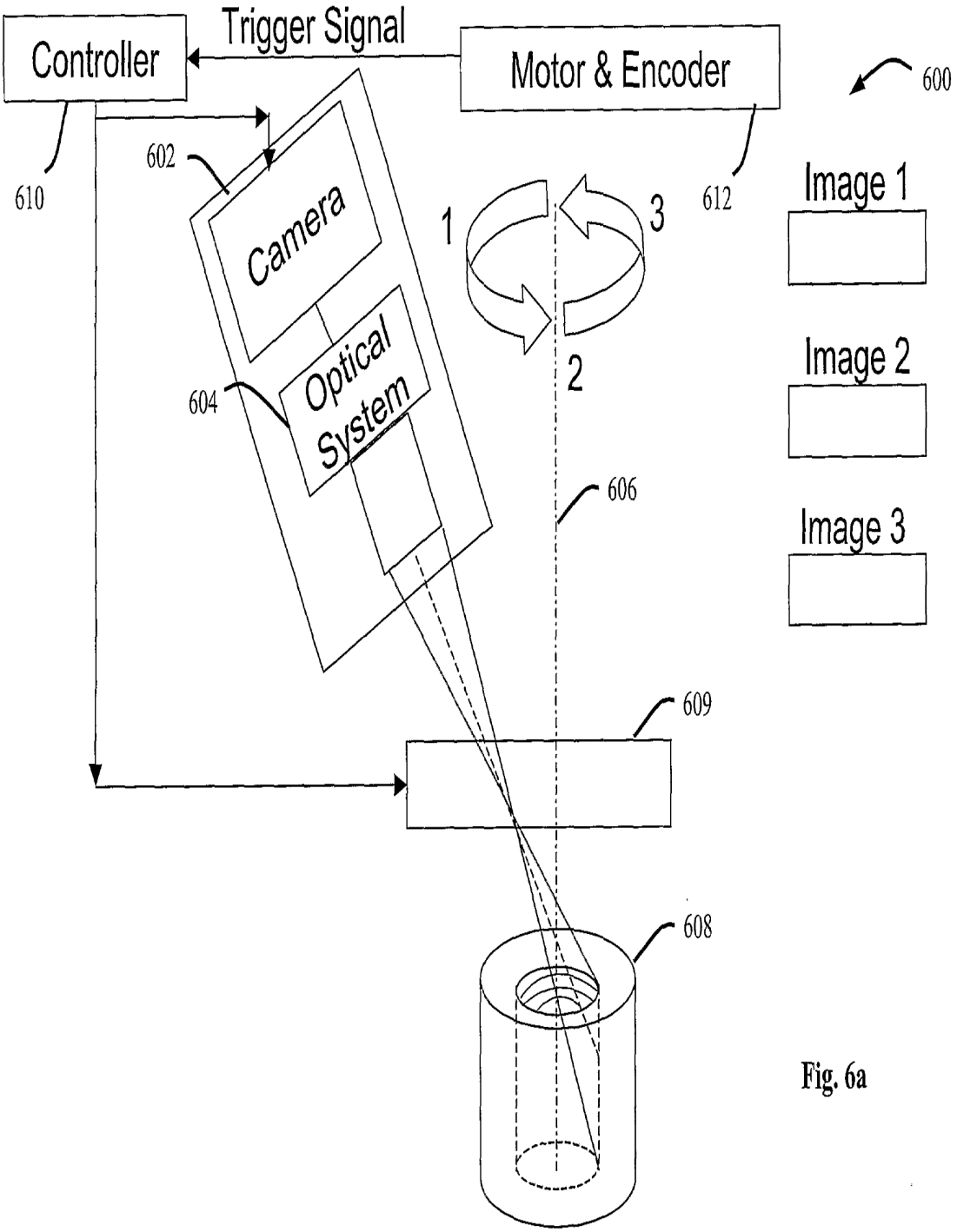

Fig. 6a

US2003127602

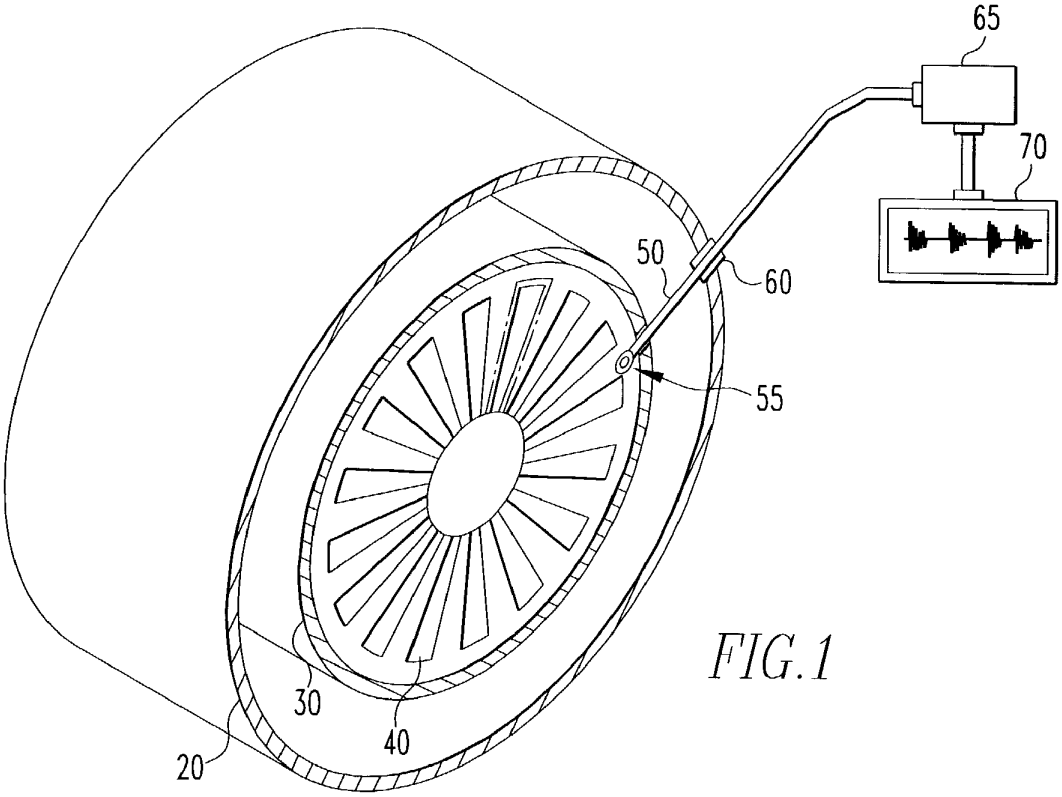

FIG.1

DE19702851

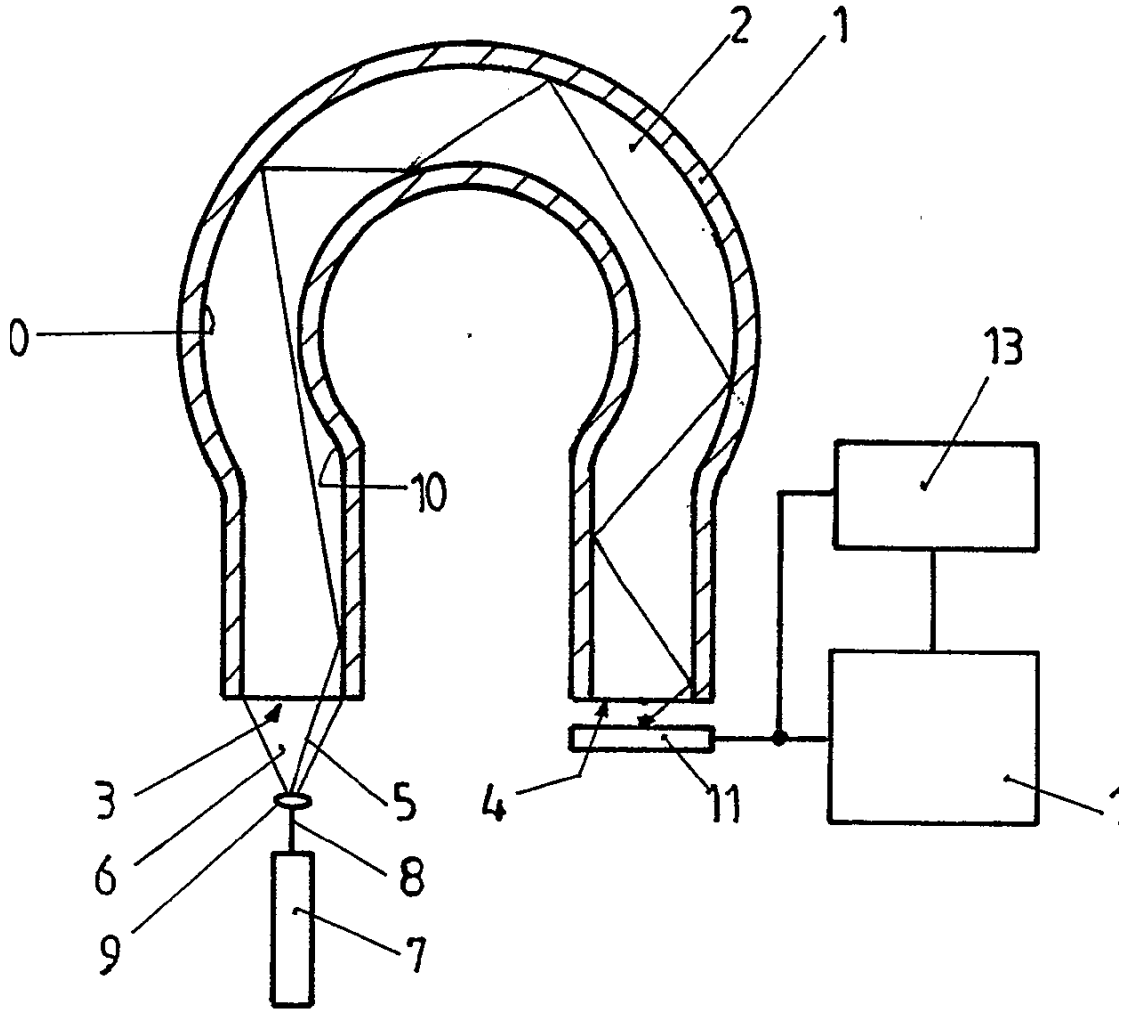

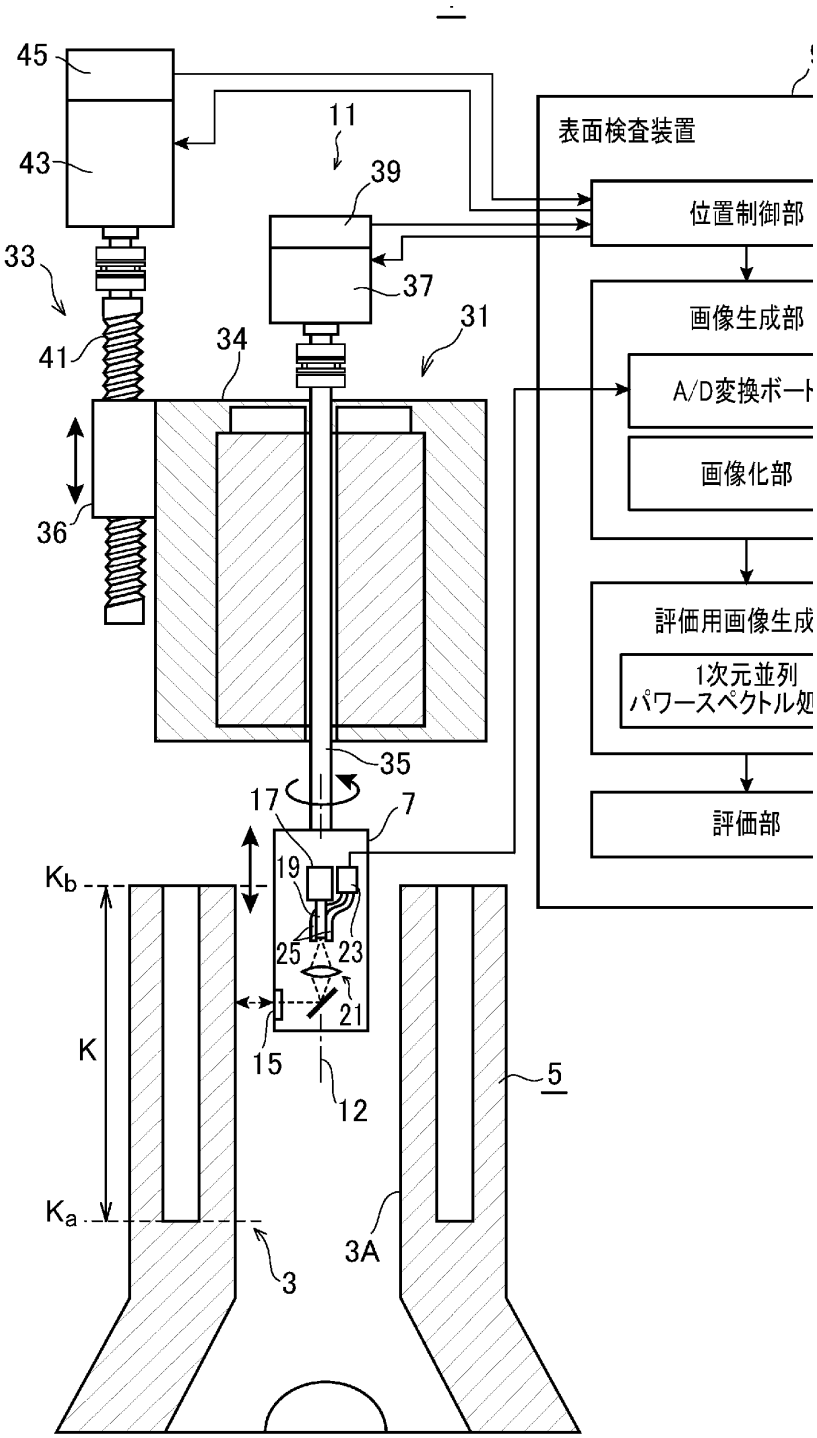

WO2010134232

References

Limiting references

This place does not cover:

Inspection of the inner surface of opaque containers such as beverage cans	G01N 21/909
Endoscopes for medical examination of cavities in human or animal bodies	A61B 1/00

Informative references

Attention is drawn to the following places, which may be of interest for search:

Probe photometers	G01N 21/8507
Investigating flaws using eddy currents: scanning moving sensors	G01N 27/902
Ultrasonic analysers: details moving the sensor	G01N 29/265
Installations enabling inspection along sewer canals	E03F 7/12
Devices for use in connection with pipes: pigs or moles	F16L 55/26
Investigating fluid tightness using light	G01M 3/38
Inventions relying on specific optical aspects	G02B 23/24
Inspection of the inner surface of nuclear reactors	G21C 17/01

G01N 21/956

Inspecting patterns on the surface of objects (contactless testing of electronic circuits G01R 31/308; testing currency G07D {manufacturing processes per se of semiconductor devices implementing a measuring step H01L 22/10})

References

Limiting references

This place does not cover:

Arrangements for contactless testing of electric properties by using electromagnetic radiation, e.g. optical radiation	G01R 31/308
Layout analysis of integrated circuits	G06F 30/394
Testing of coins or of paper currency	G07D
Monitoring assemblage of electrical components	H05K 13/08

Informative references

Attention is drawn to the following places, which may be of interest for search:

Investigating materials by ellipsometry	G01N 21/211
Metrology of e.g. coating, critical dimensions (CD), etc.	G01B 11/00
Production and inspection of photochemically patterned surfaces	G03F 1/68
Testing photolithography apparatus	**G03F7/20T22**

G01N 21/95684

{Patterns showing highly reflecting parts, e.g. metallic elements}

Definition statement

This place covers:

For instance, inventions dealing with the inspection of strip conductors and tracks in printed circuit boards, soldering bumps, etc.

Special rules of classification

Precedence rule in group title is obsolete.

G01N 21/95692

{Patterns showing hole parts, e.g. honeycomb filtering structures}

References

Limiting references

This place does not cover:

Investigating permeability of porous materials	G01N 15/08
Testing fluid tightness by using light	G01M 3/38

Special rules of classification

Precedence rule in group title is obsolete.

G01N 21/958

Inspecting transparent materials {or objects, e.g. windscreens (for conveyed flat sheet or rod G01N 21/896)}

Definition statement

This place covers:

Inventions dedicated to the inspection of articles transparent to visible light.

Relationships with other classification places

The inspection under G01N 21/958 aims the detection of flaws of transparent objects by optical means. Testing the optical properties of lenses falls under G01M 11/02.

References

Limiting references

This place does not cover:

Optical defects in or on continuously or quasi-continuously cast transparent material	G01N 21/896
Inspection of transparent containers	G01N 21/90

Informative references

Attention is drawn to the following places, which may be of interest for search:

Testing of optical properties of lenses for detecting defects by measuring geometrical properties or aberrations	G01M 11/0278

Special rules of classification

Classify if suitable also in Indexing Code **S01N21/881F2**

G01N 22/00

Investigating or analysing materials by the use of microwaves or radio waves, i.e. electromagnetic waves with a wavelength of one millimetre or more (G01N 3/00 - G01N 17/00, G01N 24/00 take precedence)

Definition statement

This place covers:

Investigating or analysing materials by the use of microwave radiation or radio waves, i.e. with a wavelength of one millimetre or more.

Relationships with other classification places

The high-frequency end of the microwave spectrum overlaps the low frequency end of the THz spectrum.

Although THz wave-based analysis is classified in G01N 21/3581, where such analysis relates to methods and apparatus at the low frequency-end of the THz band and based on (modified-) microwave technology, classification should also be in G01N 22/00.

References

Limiting references

This place does not cover:

Investigating strength properties of solid materials by application of mechanical stress	G01N 3/00
Analysing materials by weighing, e.g. weighing small particles separated from a gas or liquid	G01N 5/00
Analysing materials by measuring the pressure or volume of a gas or vapour	G01N 7/00
Investigating density or specific gravity of materials; analysing materials by determining density or specific gravity	G01N 9/00
Investigating flow properties of materials, e.g. viscosity, plasticity; analysing materials by determining flow properties	G01N 11/00
Investigating surface or boundary effects, e.g. wetting power; investigating diffusion effects; analysing materials by determining surface, boundary, or diffusion effects	G01N 13/00
Investigating characteristics of particles; investigating permeability, pore-volume, or surface-area of porous materials	G01N 15/00
Investigating resistance of materials to the weather, to corrosion, or to light	G01N 17/00
Investigating or analysing materials by the use of nuclear magnetic resonance, electron paramagnetic resonance or other spin effects	G01N 24/00

Informative references

Attention is drawn to the following places, which may be of interest for search:

Sampling; preparing specimens for investigation	G01N 1/00
Investigating materials using Terahertz radiation	G01N 21/3581
Automatic analysis; handling materials therefore	G01N 35/00

Use of wave or particle radiation for measuring roughness or irregularity of surfaces, or for measuring the deformation in a solid	G01B 15/00
Microwave transmitting aerials (radiators) or receiving aerials	H01Q

Glossary of terms

In this place, the following terms or expressions are used with the meaning indicated:

Terahertz (THz) waves	Electromagnetic waves having a frequency between the high-frequency edge of the microwaveband (approx. 300 GHz) and the long wavelength edge of the far-infrared (approx. 3THz). Can also be referred to as sub-millimeter waves or T-rays.

G01N 23/00

Investigating or analysing materials by the use of wave or particle radiation, e.g. X-rays or neutrons, not covered by groups G01N 3/00 – G01N 17/00, G01N 21/00 or G01N 22/00

Definition statement

This place covers:

Investigating or analysing materials by the use of wave radiation of very short wavelength (high energy), i.e. with a wavelength of 100 nanometres or less, e.g. X-rays, or synchrotron radiation.

Investigating or analysing materials by the use of particle radiation, e.g. neutrons, ions or electrons.

References

Application-oriented references

Examples of places where the subject matter of this place is covered when specially adapted, used for a particular purpose, or incorporated in a larger system:

Apparatus for medical or veterinary radiation diagnosis on the human or animal body, e.g. combined with radiation therapy equipment	A61B 6/00

References out of a residual place

Examples of places in relation to which this place is residual:

Investigating strength properties of solid materials by application of mechanical stress	G01N 3/00
Analysing materials by weighing, e.g. weighing small particles separated from a gas or liquid	G01N 5/00
Analysing materials by measuring the pressure or volume of a gas or vapour	G01N 7/00
Investigating density or specific gravity of materials; analysing materials by determining density or specific gravity	G01N 9/00
Investigating flow properties of materials, e.g. viscosity, plasticity; analysing materials by determining flow properties	G01N 11/00
Investigating surface or boundary effects, e.g. wetting power; investigating diffusion effects; analysing materials by determining surface, boundary, or diffusion effects	G01N 13/00

Investigating characteristics of particles; investigating permeability, pore-volume, or surface-area of porous materials	G01N 15/00
Investigating resistance of materials to the weather, to corrosion, or to light	G01N 17/00
Investigating or analysing materials by the use of optical means, i.e. using infra-red, visible, or ultra-violet light	G01N 21/00
Investigating or analysing materials by the use of Terahertz radiation	G01N 21/3581
Investigating or analysing materials by the use of microwaves	G01N 22/00

Informative references

Attention is drawn to the following places, which may be of interest for search:

Sampling; preparing specimens for investigation	G01N 1/00
Automatic analysis; handling materials therefore	G01N 35/00
Use of wave or particle radiation for measuring roughness or irregularity of surfaces, or for measuring the deformation in a solid	G01B 15/00
Measuring force or stress by the use of wave or particle radiation	G01L 1/25
Measurement of nuclear or X-ray radiation per se	G01T
Prospecting or detecting by the use of nuclear radiation, e.g. of natural or induced radioactivity in general	G01V 5/00
Image analysis	G06T 7/00
Devices or arrangements for monitoring or testing fuel or fuel elements outside the reactor core, e.g. for burn-up, for contamination	G21C 17/06
Protection against X-radiation, gamma radiation, corpuscular radiation; treating radioactively contaminated material	G21F
Techniques for handling particles or electromagnetic radiation not otherwise provided for; gamma- or X-ray microscopes	G21K
X-ray tubes	H01J 35/00
Discharge tubes with provision for introducing objects or material to be exposed to the discharge, e.g. electron microscopes	H01J 37/00
Construction or operation of X-ray apparatus or circuits therefore	H05G

G01N 23/04

and forming images of the material

References

Informative references

Attention is drawn to the following places, which may be of interest for search:

Transforming X-rays with video transmission of fluoroscopic images	H04N 5/321

G01N 23/046

using tomography, e.g. computed tomography [CT]

References

Application-oriented references

Examples of places where the subject matter of this place is covered when specially adapted, used for a particular purpose, or incorporated in a larger system:

Radiation tomography used in diagnosis	A61B 6/03

G01N 23/095

Gamma-ray resonance absorption, e.g. using the Mössbauer effect

References

Informative references

Attention is drawn to the following places, which may be of interest for search:

Resonant absorbers or driving arrangements therefor, e.g. for Moessbauer-effect devices	G21K 1/12

G01N 23/2005

Preparation of powder samples therefor

References

Informative references

Attention is drawn to the following places, which may be of interest for search:

Preparing specimens in general	G01N 1/28

G01N 23/2202

Preparing specimens therefor

References

Informative references

Attention is drawn to the following places, which may be of interest for search:

Preparing specimens in general	G01N 1/28

G01N 23/2209

using wavelength dispersive spectroscopy [WDS]

References

Informative references

Attention is drawn to the following places, which may be of interest for search:

Analysis by X-ray fluorescence in general	G01N 23/223
Spectrometry of X-rays or gamma-ray beams per se	G01T 1/36

G01N 24/00

Investigating or analyzing materials by the use of nuclear magnetic resonance, electron paramagnetic resonance or other spin effects

Definition statement

This place covers:

Activities involved in investigating or analyzing materials by nuclear magnetic resonance [NMR], magnetic resonance imaging [MRI], electron paramagnetic resonance [EPR] or other spin resonance effects;Activities involved in processing the signals collected during the steps of investigating or analyzing materials by NMR, MRI, EPR or other spin resonance effects.

Relationships with other classification places

The following places may also be relevant for classification:

G01R 33/20: Arrangements or instruments for measuring magnetic variables involving magnetic resonance

There is an overlap between the scope of G01N 24/00 (or its relevant subgroup) and G01R 33/20 (or its relevant subgroup) in the sense that, depending on the disclosure of a given document, the document may have to be classified in G01N 24/00 (or its relevant subgroup) only, in G01R 33/20 (or its relevant subgroup) only or in both places.

For instance, if the invention information of a document to be classified was primarily directed to the MR process as such (e.g. a novel pulse sequence which, according to the document, can be applied for analyzing materials wherein the document merely mentions this application but does not specifically disclose its implementation in detail), the document should be classified in G01R 33/20 (or its relevant subgroup) and the additional information related to the potential application for analyzing materials should be classified using the appropriate Indexing Code of G01N 24/00 (or its relevant subgroup).

However, if the invention information of the document was primarily directed to the analysis of a material using a known standard MR technique, the document should be classified in G01N 24/00 (or its relevant subgroup) only.

G01V 3/32: Electric or magnetic prospecting or detecting specially adapted for well-logging operating with electron or nuclear magnetic resonance

There is an overlap between the scope of G01N 24/00 (or its relevant subgroup) and G01V 3/32 in the sense that, depending on the disclosure of a given document, the document may have to be classified in G01N 24/00 (or its relevant subgroup) only, in G01V 3/32 only or in both places.

For instance, if the invention information of a document to be classified was primarily directed to the MR process as such (e.g. a novel pulse sequence for analyzing a material which, according

to the document, can be applied for MR in a borehole wherein the document merely mentions this application but does not specifically disclose its implementation in detail), the document should be classified in G01N 24/00 (or its relevant subgroup) and the additional information related to the potential application in the borehole may be classified using the appropriate Indexing Code corresponding to G01V 3/32.

However, if the invention information of the document was primarily directed to geophysics aspects or the application of MR in a borehole, the document should be classified in G01V 3/32 only.

It is further noted that a document being directed to the analysis of a core sample (taken from a borehole) in a laboratory using MR should be classified in G01N 24/00 (or its relevant subgroup) only.

Moreover, the same is true for a document being directed to a borehole tool adapted for taking a sample in situ within the borehole (e.g. a fluid sample) and for analyzing the sample within the tool using MR, even when the tool is still located within the borehole during the analysis.

Examples:

WO03087861 A1

This document discloses an NMR probe for single-sided MR comprising a standard permanent magnet assembly and a non-standard RF surface coil assembly. Moreover, the document mentions the use of the probe for analyzing materials. However, no specific details with respect to this application are given.

Therefore, the following classification symbols were assigned:

G01R 33/3808 Magnet assemblies for single-sided MR

G01R 33/383 using permanent magnets

G01R 33/341 comprising surface coils

G01N 24/08 Investigating or analyzing materials using NMR

WO2004019034 A1

This document discloses a method for the structural determination of ligands bound to macromolecular targets using standard NMR NOE spectroscopy.

Therefore, the following classification symbols were assigned:

G01N 24/08: Investigating or analyzing materials using NMR

G01R 33/4608: RF excitation sequences for enhanced detection, e.g. NOE

G01R 33/465: NMR spectroscopy applied to biological material

References

Application-oriented references

Examples of places where the subject matter of this place is covered when specially adapted, used for a particular purpose, or incorporated in a larger system:

Measuring for medical or veterinary diagnosis on the human or animal body involving electronic (EMR) or nuclear (NMR) magnetic resonance, e.g. magnetic resonance imaging (MRI)	A61B 5/055

Informative references

Attention is drawn to the following places, which may be of interest for search:

Magnetic resonance gyrometers	G01C 19/00
Arrangements or instruments for measuring magnetic variables involving magnetic resonance	G01R 33/20
Electric or magnetic prospecting or detecting specially adapted for well-logging operating with electron or nuclear magnetic resonance	G01V 3/32
Two dimensional image generation, reconstruction from projection, e.g. tomography	G06T 11/003
Magnets or magnetic bodies characterised by the magnetic materials therefor; Selection of materials for their magnetic properties	H01F 1/00
Cores, Yokes, or armatures	H01F 3/00
Coils	H01F 5/00
Superconducting magnets	H01F 6/00
Permanent magnets	H01F 7/02
Electromagnets	H01F 7/06
Omegatrons using ion cyclotron resonance	H01J 49/38
Aerials	H01Q
Screening of an apparatus or of components against electric or magnetic fields	H05K 9/00

Special rules of classification

In this group, classification of additional information, i.e. non-invention information, is compulsory using the appropriate Indexing Code (G01N 24/00 - G01N 24/14).

Glossary of terms

In this place, the following terms or expressions are used with the meaning indicated:

NMR	nuclear magnetic resonance
EMR	electron magnetic resonance
EPR	electron paramagnetic resonance
ESR	electron spin resonance
MRI	magnetic resonance imaging
NQR	nuclear quadrupole resonance

G01N 24/12

by using double resonance

Definition statement

This place covers:

The combined use of at least two different spin resonance techniques for analyzing materials, e.g. the combined use of NMR and NQR.

References

Limiting references

This place does not cover:

RF coils being resonant at two distinct Larmor frequencies.	G01R 33/3635

G01N 25/00

Investigating or analyzing materials by the use of thermal means (G01N 3/00 - G01N 23/00 take precedence)

Definition statement

This place covers:

Thermal and calorimetric analysis of materials.

Thermography.

Investigating:

- changes of state or changes of phase
- sintering
- thermal coefficient of expansion
- thermal conductivity
- development of heat, i.e. calorimetry

flash-point

- explosibility
- moisture content
- presence of flaws
- specific heat

References

Limiting references

This place does not cover:

Investigating strength properties of solid materials by application of mechanical stress	G01N 3/00
Analysing materials by weighing, e.g. weighing small particles separated from a gas or liquid	G01N 5/00
Analysing materials by measuring the pressure or volume of a gas or vapour	G01N 7/00
Investigating density or specific gravity of materials; analysing materials by determining density or specific gravity	G01N 9/00
Investigating flow properties of materials, e.g. viscosity, plasticity; analysing materials by determining flow properties	G01N 11/00
Investigating surface or boundary effects, e.g. wetting power; investigating diffusion effects; analysing materials by determining surface, boundary, or diffusion effects	G01N 13/00
Investigating characteristics of particles; investigating permeability, pore-volume, or surface-area of porous materials	G01N 15/00

Investigating resistance of materials to the weather, to corrosion, or to light	G01N 17/00
Investigating materials by mechanical methods	G01N 19/00
Investigating or analysing materials by the use of optical means, i.e. using infra-red, visible, or ultra-violet light	G01N 21/00
Investigating or analysing materials by the use of microwaves	G01N 22/00
Investigating or analysing materials by the use of other wave or particle radiation, e.g. X-rays or neutrons	G01N 23/00

Informative references

Attention is drawn to the following places, which may be of interest for search:

Sampling; preparing specimens for investigation	G01N 1/00
Automatic analysis; handling materials therefore	G01N 35/00
Optical radiation pyrometry	G01J 5/00
Measuring temperature or quantity of heat; thermally-sensitive elements not otherwise provided for	G01K

G01N 25/72

Investigating presence of flaws

References

Informative references

Attention is drawn to the following places, which may be of interest for search:

By investigating thermal conductivity	G01N 25/18

G01N 27/00

Investigating or analysing materials by the use of electric, electrochemical, or magnetic means (G01N 3/00 – G01N 25/00 take precedence; measurement or testing of electric or magnetic variables or of electric or magnetic properties of materials G01R)

Definition statement

This place covers:

Investigating non-electric or non-magnetic properties of materials by using electric or magnetic methods.

Investigating by electrochemical means, e.g.:

- investigating electrochemical variables, e.g. pH, ion concentration, potentiometry, amperometry, voltammetry;
- the use of electrolysis or electrophoresis as an analytical means.

Instruments, e.g. hygrometers, for measuring non-electric or non-magnetic properties.

Relationships with other classification places

G01N 27/00 is specifically intended for classification of documents related to the measurement of material properties, thus not for the testing of electrical circuits, batteries or devices, which should be classified in G01R 31/00.

Measuring or investigating electric or magnetic properties of materials per se is classified in G01R, as opposed to investigating materials by electric or magnetic means, which is classified in this group.

References

Limiting references

This place does not cover:

Investigating strength properties of solid materials by application of mechanical stress	G01N 3/00
Analysing materials by weighing, e.g. weighing small particles separated from a gas or liquid	G01N 5/00
Analysing materials by measuring the pressure or volume of a gas or vapour	G01N 7/00
Investigating density or specific gravity of materials; analysing materials by determining density or specific gravity	G01N 9/00
Investigating flow properties of materials, e.g. viscosity, plasticity; analysing materials by determining flow properties	G01N 11/00
Investigating surface or boundary effects, e.g. wetting power; investigating diffusion effects; analysing materials by determining surface, boundary, or diffusion effects	G01N 13/00
Investigating characteristics of particles; investigating permeability, pore-volume, or surface-area of porous materials	G01N 15/00
Investigating resistance of materials to the weather, to corrosion, or to light	G01N 17/00
Investigating materials by mechanical methods	G01N 19/00
Investigating or analysing materials by the use of optical means, i.e. using infra-red, visible, or ultra-violet light	G01N 21/00
Investigating or analysing materials by the use of microwaves	G01N 22/00
Investigating or analysing materials by the use of other wave or particle radiation, e.g. X-rays or neutrons	G01N 23/00
Investigating or analysing materials by the use of nuclear magnetic resonance, electron paramagnetic resonance or other spin effects	G01N 24/00
Investigating or analysing materials by the use of thermal means	G01N 25/00
Measurement or testing of electric or magnetic variables or of electric or magnetic properties of materials	G01R

Application-oriented references

Examples of places where the subject matter of this place is covered when specially adapted, used for a particular purpose, or incorporated in a larger system:

Medical or veterinary diagnosis on the human or animal body using electric or magnetic means	A61B 5/05
Systems for controlling or regulating non-electric variables	G05D 11/00

Informative references

Attention is drawn to the following places, which may be of interest for search:

Sampling; preparing specimens for investigation	G01N 1/00
Investigating or analysing materials by separation into components using adsorption, absorption or similar phenomena or using ion-exchange, e.g. chromatography	G01N 30/00
Immunoelectrophoresis	G01N 33/561
Automatic analysis; handling materials therefore	G01N 35/00
Chemical or physical processes, e.g. catalysis, colloid chemistry; their relevant apparatus, for electrochemical processes or apparatus in general	B01J 19/00
Use of electric or magnetic means for measuring roughness or irregularity of surfaces, or for measuring deformation in a solid	G01B 7/00
Electric or magnetic prospecting or detecting; measuring magnetic field characteristics of the earth, e.g. declination, deviation	G01V 3/00
Particle spectrometers	H01J 49/00
Processes or means (e.g. batteries) for the direct conversion of chemical into electrical energy, e.g. galvanic primary cells, or standard cells	H01M, H01M 6/00, H01M 6/28

Special rules of classification

Although G01N 27/327 is concerned with details of biochemical electrodes, details not specific to a particular biological test should additionally be classified in G01N 33/4875 or G01N 33/48785.

Glossary of terms

In this place, the following terms or expressions are used with the meaning indicated:

Conductometry	measuring conductance or resistance, i.e. the ohmic current's proportionality to the applied voltage
Amperometry	measuring the electrochemical current generated by a constant voltage
Voltammetry	measuring the electrochemical current generated by a varying voltage
Polarography	Voltammetry
Potentiometry	measuring the voltage (potential difference, electromotive force) between two electrodes at zero current

G01N 27/04

by investigating resistance

References

Informative references

Attention is drawn to the following places, which may be of interest for search:

For measuring the amount of particles	G01N 15/0656

G01N 27/06

of a liquid (involving electrolysis G01N 27/26)

References

Limiting references

This place does not cover:

By investigating electrochemical variables; by using electrolysis or electrophoresis	G01N 27/26

Application-oriented references

Examples of places where the subject matter of this place is covered when specially adapted, used for a particular purpose, or incorporated in a larger system:

Measuring electric resistance of fluids	G01N 27/22

Informative references

Attention is drawn to the following places, which may be of interest for search:

Involving polarography	G01N 27/48

G01N 27/10

Investigation or analysis specially adapted for controlling or monitoring operations or for signalling

References

Informative references

Attention is drawn to the following places, which may be of interest for search:

System for controlling or regulating no-electric variables	G05D

G01N 27/26

by investigating electrochemical variables; by using electrolysis or electrophoresis

References

Application-oriented references

Examples of places where the subject matter of this place is covered when specially adapted, used for a particular purpose, or incorporated in a larger system:

Investigating resistance to corrosion	G01N 17/00
Immunoelectrophoresis	G01N 33/561

Informative references

Attention is drawn to the following places, which may be of interest for search:

Investigating or analysing materials by separation into components using adsorption, absorption or similar phenomena or using ion-exchange, e.g. chromatography	G01N 30/00
Electrochemical processes or apparatus	B01J
Standard cells	H01M 6/28

G01N 27/27

Association of two or more measuring systems or cells, each measuring a different parameter, where the measurement results may be either used independently, the systems or cells being physically associated, or combined to produce a value for a further parameter

References

Informative references

Attention is drawn to the following places, which may be of interest for search:

Gas sensor arrays	G01N 33/0031

G01N 27/327

Biochemical electrodes {, e.g. electrical or mechanical details for in vitro measurements}

References

Informative references

Attention is drawn to the following places, which may be of interest for search:

In vivo	A61B 5/00
Chemical and biological details	C12Q 1/00, G01N 33/543

G01N 27/416

Systems (G01N 27/27 takes precedence)

References

Limiting references

This place does not cover:

Association of two or more measuring systems or cells, each measuring a different parameter,where the measurement results may be either used independently, the systems or cells being physically associated, or combined to	G01N 27/27

Informative references

Attention is drawn to the following places, which may be of interest for search:

For testing batteries	G01R 31/36

G01N 27/447

using electrophoresis

References

Informative references

Attention is drawn to the following places, which may be of interest for search:

For non-analytical purposes	B01D 57/02
Separating particles by dielectrophoresis	B03C 5/00
Aspects concerning peptides or proteins	C07K 1/26

G01N 27/60

by investigating electrostatic variables {, e.g. electrographic flaw testing (G01N 27/007 takes precedence)}

References

Limiting references

This place does not cover:

By investigating the electric dipolar moment	G01N 27/007

Informative references

Attention is drawn to the following places, which may be of interest for search:

By investigating capacitance	G01N 27/22

G01N 27/622

Ion mobility spectrometry

References

Informative references

Attention is drawn to the following places, which may be of interest for search:

Mass spectrometry	H01J 49/26

G01N 27/64

using wave or particle radiation to ionise a gas, e.g. in an ionisation chamber

References

Informative references

Attention is drawn to the following places, which may be of interest for search:

Discharge tubes for measuring pressure of introduced gas or for detecting presence of gas	H01J 41/02

G01N 27/76

by investigating susceptibility

References

Informative references

Attention is drawn to the following places, which may be of interest for search:

Measuring susceptibility	G01R 33/16

G01N 27/90

using eddy currents

References

Informative references

Attention is drawn to the following places, which may be of interest for search:

For measuring thickness	G01B 7/06

G01N 27/9073

{Recording measured data}

References

Informative references

Attention is drawn to the following places, which may be of interest for search:

Indicating or recording means for measuring in general	G01D

G01N 27/9093

Arrangements for supporting the sensor; Combinations of eddy-current sensors and auxiliary arrangements for marking or for rejecting

References

Informative references

Attention is drawn to the following places, which may be of interest for search:

Sorting individual articles or bulk material fit to be sorted piece-meal, controlled indirectly by devices which detect or measure some feature of the article or material to be sorted	B07C 5/00

G01N 27/92

by investigating breakdown voltage (G01N 27/60, G01N 27/62 take precedence)

References

Limiting references

This place does not cover:

By investigating electrostatic variables, e.g. electrographic flaw testing	G01N 27/60
By investigating the ionisation of gases; by investigating electric discharges, e.g. emission of cathode	G01N 27/62

Application-oriented references

Examples of places where the subject matter of this place is covered when specially adapted, used for a particular purpose, or incorporated in a larger system:

Testing of articles or specimens of solids or fluids for dielectric strength or breakdown voltage	G01R 31/12

G01N 29/00

Investigating or analysing materials by the use of ultrasonic, sonic or infrasonic waves; Visualisation of the interior of objects by transmitting ultrasonic or sonic waves through the object (G01N 3/00, G01N 5/00, G01N 7/00, G01N 9/00, G01N 11/00, G01N 13/00, G01N 15/00, G01N 17/00, G01N 19/00, G01N 21/00, G01N 22/00, G01N 23/00, G01N 24/00, G01N 25/00, G01N 27/00 take precedence)

Definition statement

This place covers:

Investigating or analysing materials by using sound waves (also called acoustic waves).

Visualisation of the interior of solid objects by using sound waves, e.g. acoustic microscopy.

Instruments, e.g. probes, for investigating or analysing by use of sound waves.

References

Limiting references

This place does not cover:

Investigating strength properties of solid materials by application of mechanical stress	G01N 3/00
Analysing materials by weighing, e.g. weighing small particles separated from a gas or liquid	G01N 5/00
Analysing materials by measuring the pressure or volume of a gas or vapour	G01N 7/00
Investigating density or specific gravity of materials; analysing materials by determining density or specific gravity	G01N 9/00
Investigating flow properties of materials, e.g. viscosity, plasticity; analysing materials by determining flow properties	G01N 11/00
Investigating surface or boundary effects, e.g. wetting power; investigating diffusion effects; analysing materials by determining surface, boundary, or diffusion effects	G01N 13/00
Investigating characteristics of particles; investigating permeability, pore-volume, or surface-area of porous materials	G01N 15/00
Investigating resistance of materials to the weather, to corrosion, or to light	G01N 17/00
Investigating materials by mechanical methods	G01N 19/00
Investigating or analysing materials by the use of optical means, i.e. using infra-red, visible, or ultra-violet light	G01N 21/00
Investigating or analysing materials by the use of microwaves	G01N 22/00
Investigating or analysing materials by the use of other wave or particle radiation, e.g. X-rays or neutrons	G01N 23/00
Investigating or analysing materials by the use of nuclear magnetic resonance, electron paramagnetic resonance or other spin effects	G01N 24/00
Investigating or analysing materials by the use of thermal means	G01N 25/00
Investigating or analysing materials by the use of electric, electro-chemical, or magnetic means	G01N 27/00

Application-oriented references

Examples of places where the subject matter of this place is covered when specially adapted, used for a particular purpose, or incorporated in a larger system:

Medical or veterinary diagnosis on the human or animal body using ultrasonic, sonic or infrasonic waves, e.g. examination of body cavities or body tracts	A61B 8/00
Seismic or acoustic prospecting or detecting	G01V 1/00

Informative references

Attention is drawn to the following places, which may be of interest for search:

Sampling; preparing specimens for investigation	G01N 1/00
Specific materials	G01N 33/00

Automatic analysis; handling materials therefore	G01N 35/00
Generating mechanical vibrations in solids	B06B
Use of ultrasonic, sonic or infrasonic vibrations for measuring roughness or irregularity of surfaces, or for measuring the deformation in a solid	G01B 17/00
Flow measurements by ultrasonic waves	G01F 1/66
Measuring or indicating of mechanical vibrations or ultrasonic, sonic or infrasonic waves	G01H
Systems for direction-finding, navigation, locating, presence-detecting using the reflection or re-radiation of acoustic waves, e.g. sonar systems	G01S 15/00
Prospecting or detecting by the use of seismic or acoustic means	G01V 1/00
Obtaining records by techniques analogous to photography using ultrasonic, sonic or infrasonic waves	G03B 42/06
Control of mechanical oscillations	G05D 19/00
Image analysis	G06T 7/00
Generating mechanical vibrations in fluids	G10K

Special rules of classification

Further detail is covered by the subgroup of Indexing Code group G01N 2291/00.

Classification is mandatory. In particular:

- For the 'analysis of fluids' see G01N 29/02 and corresponding subgroups, codes G01N 2291/021 and G01N 2291/022 and the corresponding subgroups. Microsensors are additionally classified in G01N 29/022.
- For the 'analysis of solids' see G01N 29/04 and subgroups, G01N 29/221, G01N 29/223, G01N 29/225, G01N 29/26 and corresponding subgroups, codes G01N 2291/023 and G01N 2291/26 and the corresponding subgroups.
- Remaining classes and codes are used for both the analysis of fluids and solids.

Documents should either get at least one class or one code referring to the 'measured parameter', i.e. velocity of sound, attenuation (see G01N 29/024, G01N 29/028, G01N 29/032, G01N 29/036, G01N 29/07, G01N 29/09, G01N 29/11, G01N 29/12 or G01N 2291/01 and subgroups) or should be classified in ultrasonic flaw detection (see G01N 29/041, G01N 29/043, G01N 29/045), ultrasonic imaging (see G01N 29/06) or acoustic emission (see G01N 29/14).

Documents should also be classified with one code from G01N 2291/10 and subgroups (number of transducers).

Documents should additionally be classified with one or more codes of G01N 2291/04 and subgroups (wave modes and trajectories).

Further subgroups G01N 29/22 (Details), G01N 29/34(Wave generation), G01N 29/36 (Wave detection), G01N 29/44 (Signal processing), G01N 2291/025 (Condition change) and G01N 29/028 (Material parameters) or their corresponding subgroups should be used if applicable.

Synonyms and Keywords

In patent documents, the following words/expressions are often used as synonyms:

- "sonic", "infrasonic", "supersonic", "ultrasonic", "ultrasonics", "ultrasound", and "acoustic"

G01N 30/00

Investigating or analysing materials by separation into components using adsorption, absorption or similar phenomena or using ion-exchange, e.g. chromatography {or field flow fractionation} (G01N 3/00, G01N 5/00, G01N 7/00, G01N 9/00, G01N 11/00, G01N 13/00, G01N 15/00, G01N 17/00, G01N 19/00, G01N 21/00, G01N 22/00, G01N 23/00, G01N 24/00, G01N 25/00, G01N 27/00, G01N 29/00 take precedence)

Definition statement

This place covers:

Instrumentation for qualitative analysis by field flow fractionation, column chromatography, inverse chromatography, plate chromatography, ion chromatography, and details thereof.

Throughout the subgroups, in the absence of an indication to the contrary, no particular distinction is made between gaseous, liquid or supercritical mobile phases.

References

Limiting references

This place does not cover:

Investigating strength properties of solid materials by application of mechanical stress	G01N 3/00
Analysing materials by weighing, e.g. weighing small particles separated from a gas or liquid	G01N 5/00
Analysing materials by measuring the pressure or volume of a gas or vapour	G01N 7/00
Investigating density or specific gravity of materials; analysing materials by determining density or specific gravity	G01N 9/00
Investigating flow properties of materials, e.g. viscosity, plasticity; analysing materials by determining flow properties	G01N 11/00
Investigating surface or boundary effects, e.g. wetting power; investigating diffusion effects; analysing materials by determining surface, boundary, or diffusion effects	G01N 13/00
Investigating characteristics of particles; investigating permeability, pore-volume, or surface-area of porous materials	G01N 15/00
Investigating resistance of materials to the weather, to corrosion, or to light	G01N 17/00
Investigating materials by mechanical methods	G01N 19/00
Investigating or analysing materials by the use of optical means, i.e. using infra-red, visible, or ultra-violet light	G01N 21/00
Investigating or analysing materials by the use of microwaves	G01N 22/00
Investigating or analysing materials by the use of other wave or particle radiation, e.g. X-rays or neutrons	G01N 23/00
Investigating or analysing materials by the use of nuclear magnetic resonance, electron paramagnetic resonance or other spin effects	G01N 24/00
Investigating or analysing materials by the use of thermal means	G01N 25/00

Investigating or analysing materials by the use of electric, electro-chemical, or magnetic means, e.g. electrophoresis	G01N 27/00
Investigating or analysing materials by the use of ultrasonic, sonic or infrasonic waves; visualisation of the interior of objects by transmitting ultrasonic or sonic waves through the object	G01N 29/00

Informative references

Attention is drawn to the following places, which may be of interest for search:

Sampling; preparing specimens for investigation	G01N 1/00
Investigating or analysing specific materials	G01N 33/00
Automatic analysis; handling materials therefor	G01N 35/00
Separating components of materials in general	B01D, B01D 15/00, B01D 53/02, B01D 53/14
For preparation or production of components	B01D 21/00, B01D 45/00
Chemical or physical processes (e.g. catalysis, colloid chemistry) or their relevant apparatus, e.g. solid sorbent compositions in general, or ion-exchange in general	B01J, B01J 20/00, B01J 39/00, B01J 41/00, B01J 49/00
Separation of solid materials from solid materials using wet methods, or using pneumatic tables or jigs	B03B, B03D
Separation of solid materials from solid materials or fluids using magnetic or electrostatic methods, or using high-voltage electric fields	B03C
Separation of solid materials from solid materials or fluids using sieving, screening, sifting, gas currents, or other dry methods	B07B
Mass spectrometers	H01J 49/00

Special rules of classification

An Indexing Code scheme G01N 30/00 mirrors the G01N 30/00 scheme with additional subdivisions for further details. This G01N 30/00 scheme and more generally the G01N scheme should be used, if applicable, for secondary non invention related information as well as more specific information to the documents classified in G01N 30/00.

Glossary of terms

In this place, the following terms or expressions are used with the meaning indicated:

Conditioning	means the adjustment or control of environmental parameters, e.g. temperature or pressure
Involving	when used in relation to a material, includes the testing for the material as well as employing the material as a determinant or reactant in a test for a different material

G01N 30/88

Integrated analysis systems specially adapted therefor, not covered by a single one of the groups G01N 30/04 - G01N 30/86

References

Informative references

Attention is drawn to the following places, which may be of interest for search:

Signal analysis systems in general	G06F, G06G, G06T

G01N 31/00

Investigating or analysing non-biological materials by the use of the chemical methods specified in the subgroup; Apparatus specially adapted for such methods

Definition statement

This place covers:

Investigating non-biological materials by the use of:

- precipitation
- catalysis
- combustion, including oxide-reduction reactions
- titration
- microanalysis, e.g. drop reaction
- chemical indicators

Investigating the properties of materials specially adapted for use in processes covered by subclass B23K (namely: soldering or unsoldering; welding; cladding or plating by soldering or welding; cutting by applying heat locally, e.g. flame cutting; working by laser beam) which is classified in the group G01N 31/12 (investigating using combustion).

References

Application-oriented references

Examples of places where the subject matter of this place is covered when specially adapted, used for a particular purpose, or incorporated in a larger system:

Immunoassay	G01N 33/53
Testing the effectiveness or completeness of sterilisation procedures without using enzymes or microorganisms	A61L 2/28
Involving enzymes or microorganisms	C12M, C12Q
Apparatus for enzymology or microbiology	C12M

Informative references

Attention is drawn to the following places, which may be of interest for search:

Sampling; preparing specimens for investigation	G01N 1/00
Systems in which material is subjected to a chemical reaction, the progress or the result of the reaction being optically investigated	G01N 21/75- G01N 21/83

Investigating or analysing biological material by chemical analysis	G01N 33/50
Automatic analysis; handling materials therefore	G01N 35/00
Measuring or testing processes, other than immunoassay	C12Q 1/00
Combinatorial chemistry; Libraries	C40B

Special rules of classification

The observation of the progress of the reactions as covered by groups G01N 31/02 - G01N 31/22 by any of the methods specified in groups G01N 3/00 - G01N 29/00, if this observation is of major importance, is classified in the relevant group covering the method.

G01N 31/18

Burettes specially adapted for titration

References

Informative references

Attention is drawn to the following places, which may be of interest for search:

Burettes in general	B01L 3/02

G01N 33/00

Investigating or analysing materials by specific methods not covered by groups G01N 1/00 - G01N 31/00

Definition statement

This place covers:

Investigating or analysing materials, i.e. either solid, liquid or gaseous media, insofar as the material object of the investigation or analysis is of major importance.

Investigating or analysing materials by methods specifically adapted to the object of the analysis.

Investigating or analysing materials by a combination of pre-treatment and analysis, specifically adapted to the object of analysis.

Investigating or analysing biological material (covered by group G01N 33/48), e.g. blood (in vitro) or urine, including chemical analysis (see definition of subgroup G01N 33/50).

Relationships with other classification places

Analysis as an integrated step of a process should be classified with the process, insofar as the process is fully provided for in another subclass. For example, analysis of water as integrated step of water treatment process is classified in subclass C02F.

References

Application-oriented references

Examples of places where the subject matter of this place is covered when specially adapted, used for a particular purpose, or incorporated in a larger system:

Determining the germinating capacity of seeds	A01C 1/02

Measuring characteristics of blood in vivo, e.g. gas concentration within the blood, pH-value of blood, for medical or veterinary diagnosis	A61B 5/145
Apparatus for enzymology or microbiology	C12M
Measuring or testing processes involving enzymes or microorganisms	C12Q
Investigation of foundation soil or ground water in-situ	E02D 1/00

References out of a residual place

Examples of places in relation to which this place is residual:

Sampling; preparing specimens for investigation	G01N 1/00
Investigating strength properties of solid materials by application of mechanical stress	G01N 3/00
Analysing materials by weighing, e.g. weighing small particles separated from a gas or liquid	G01N 5/00
Analysing materials by measuring the pressure or volume of a gas or vapour	G01N 7/00
Investigating density or specific gravity of materials; analysing materials by determining density or specific gravity	G01N 9/00
Investigating flow properties of materials, e.g. viscosity, plasticity; analysing materials by determining flow properties	G01N 11/00
Investigating surface or boundary effects, e.g. wetting power; investigating diffusion effects; analysing materials by determining surface, boundary, or diffusion effects	G01N 13/00
Investigating characteristics of particles; investigating permeability, pore-volume, or surface-area of porous materials	G01N 15/00
Investigating resistance of materials to the weather, to corrosion, or to light	G01N 17/00
Investigating materials by mechanical methods	G01N 19/00
Investigating or analysing materials by the use of optical means, i.e. using infra-red, visible, or ultra-violet light	G01N 21/00
Investigating or analysing materials by the use of microwaves	G01N 22/00
Investigating or analysing materials by the use of other wave or particle radiation, e.g. X-rays or neutrons	G01N 23/00
Investigating or analysing materials by the use of nuclear magnetic resonance, electron paramagnetic resonance or other spin effects	G01N 24/00
Investigating or analysing materials by the use of thermal means	G01N 25/00
Investigating or analysing materials by the use of electric, electro-chemical, or magnetic means	G01N 27/00
Investigating or analysing materials by the use of ultrasonic, sonic or infrasonic waves; visualisation of the interior of objects by transmitting ultrasonic or sonic waves through the object	G01N 29/00

G01N 33/48

Biological material, e.g. blood, urine (G01N 33/02, G01N 33/26, G01N 33/44, G01N 33/46 take precedence); Haemocytometers (counting blood corpuscules distributed over a surface by scanning the surface G06M 11/02)

Definition statement

This place covers:

Investigating or analysing biological material wherein the means of investigation or analysis is not covered elsewhere.

References

Limiting references

This place does not cover:

Investigating or analysing food	G01N 33/02
Investigating or analysing oils, viscous liquids, paints or inks	G01N 33/26
Investigating or analysing resins, plastics, rubber or leather	G01N 33/44
Investigating or analysing wood	G01N 33/46
Counting blood corpuscules distributed over a surface by scanning the surface	G06M 11/02

Application-oriented references

Examples of places where the subject matter of this place is covered when specially adapted, used for a particular purpose, or incorporated in a larger system:

Determining the germinating capacity of seeds	A01C 1/02

Special rules of classification

Methods of physical analysis are covered by groups G01N 33/483 - G01N 33/4972.

G01N 33/50

Chemical analysis of biological material, e.g. blood, urine; Testing involving biospecific ligand binding methods; Immunological testing (measuring or testing processes involving enzymes or microorganisms, compositions or test papers therefor; processes for forming such compositions, condition responsive control in microbiological or enzymological processes C12Q)

Definition statement

This place covers:

Chemical analysis of biological material, e.g. blood (in vitro), urine.

Testing involving biospecific ligand binding methods.

Use of compounds or compositions for colorimetric, spectrophotometric or fluorometric investigation, e.g. use of reagent paper.

Immunological testing, including immunoassay or materials therefor.

Testing involving human, animal or plant cells.

Testing or evaluating the effect of chemical or biological compounds (potential drug discovery) using human, animal or plant cells.

References

Limiting references

This place does not cover:

Measuring or testing processes, other than immunoassay or biospecific binding assay (which is covered by G01N 33/53), involving enzymes or microorganisms	C12Q

Special rules of classification

In subgroups G01N 33/50 - G01N 33/98 classification is made according to the most relevant feature rather than according to the last place rule.

Thus an immunoassay for a hormone, in which there is sufficient disclosure of the immunoassay technique used, would be classified in G01N 33/53, or the most relevant subgroup thereof, as well as in G01N 33/74.

In subgroups G01N 33/50 - G01N 33/98 the allocation of additional symbols from the range G01N 2333/00 - G01N 2800/7095, where possible, is considered mandatory.

Some extra guidance on the use of these additional symbols:-

Additional information symbols are used in this field to refine the classification, especially in subgroups where a detailed subdivision is not available. A typical example is the subgroup G01N 33/6893 which encompasses protein biomarkers for diseases not provided for elsewhere, thus clearly a rather broadly defined subgroup. In order to further refine the classification of documents in this subgroup, typically additional symbols from the G01N 2800/00 series are allocated. Of course symbols from this series are also used in other subgroups where diseases are concerned.

Similarly additional information symbols from the entire range above are applied to any subgroup to further refine the classification. Normally this would apply more to subgroups with a broader definition. If a specific subgroup already exists in the main trunk the use of additional symbols is not necessary. For example, a document describes a method for detecting a hormone. Classification will be in G01N 33/74 only as allocation of an additional symbol for hormones (G01N 2333/575) does not add value (merely duplication).

However, if the document were to disclose the hormone to be insulin, classification would be in G01N 33/74 and additionally G01N 2333/62 for insulins. The additional symbol has added value in this case (see also "Special Rules" section under subclass G01N 33/566.

Further symbols from the immunoassay line would also be possible if sufficient detail was present.

Special case - many possible alternatives (laundry lists).

Documents often disclose lists of alternatives, especially in the area of biomarkers for diseases. Regularly these lists run into the tens and occasionally into the hundreds of different alternatives. As the value of such disclosures is debatable, it doesn't make sense trying to allocate additional symbols to each and every alternative.

How are the **G01N2000/00** series symbols to be allocated in such cases?

Often claimed lists can be grouped into families of proteins/diseases etc. If a list can be grouped into five or less families, classify on the basis of the families.

If this is not possible then the description/examples should be consulted. If there are worked examples of five or less members of the list, classify on the basis of the worked examples.

If after all it is not possible to limit the list to five or less symbols, then the added value is lost and classification is made in the most appropriate place in the main trunk only.

G01N 33/5002

{Partitioning blood components}

Definition statement

This place covers:

Inventive contribution must involve some form of chemical additives or reaction e.g. precipitating or flocculating agents.

Relationships with other classification places

Consider also headings related to the chemicals used per se such as C07D - C07K. If materials claimed per se, the relevant heading should be considered.

References

Limiting references

This place does not cover:

Filtering	G01N 33/483
Partitioning by physical means	G01N 33/491
Solutions for selective lysis prior to cytometry	G01N 33/5094

G01N 33/5005

{involving human or animal cells (immunoassay G01N 33/56966; immunoassays of protozoa G01N 33/56905; protozoa in screening assays C12Q 1/025)}

Definition statement

This place covers:

Screening of cells, or use of cells to screen other material expressed by or in cells or react with cells.

References

Limiting references

This place does not cover:

Immunoassay/biospecific binding assay for plant cells, fungi or algae	G01N 33/56961
Immunoassay/biospecific binding assay for human/animal cells	G01N 33/56966
Screening involving microorganisms including protozoa	C12Q 1/025

G01N 33/5008

{for testing or evaluating the effect of chemical or biological compounds, e.g. drugs, cosmetics}

Definition statement

This place covers:

Testing or evaluating the effects of compounds on cells and includes screening, combinatorial libraries for binding studies or lead compound identification.

Methods using cells for identification of potential therapeutic agents, toxicity testing, etc.

Special rules of classification

Solid phase libraries are classified in terms of the product e.g. G01N 33/68 and subgroups.

As G01N 33/5008 and subgroups are by definition used for screening of chemical or biological compounds, the additional symbols from the G01N 2500/00 range are not required.

G01N 33/5011

{for testing antineoplastic activity}

Definition statement

This place covers:

Testing on human or animal cells substances that prevent, alleviate, reduce or stunt cancer.

Special rules of classification

Screening for anti-cancer compounds are classified under this symbol and not in the cancer area G01N 33/574 and subgroups. See G01N 2500/00- G01N 2500/20

G01N 33/5014

{for testing toxicity}

Definition statement

This place covers:

Testing on human or animal cells, substances, including nanomaterials, that cause injury, death, harmful metabolic consequences or non-cancer causing mutagenicity to cells.

G01N 33/5017

{for testing neoplastic activity}

Definition statement

This place covers:

Testing on human or animal cells substances that cause cancer or induce mutagenicity causing cancer.

G01N 33/502

{for testing non-proliferative effects}

Definition statement

This place covers:

Testing on human or animal cells substances that cause physiological changes e.g. up/down regulation of genes which do not lead to cell death or mutagenicity.

G01N 33/5023

{on expression patterns}

Definition statement

This place covers:

Testing on human or animal cells substances that produce an expression pattern. Includes methods of determining differential expression patterns as indicators of treatment profiles, therapy progress or immune status (metabolomics).

G01N 33/5026

{on cell morphology}

Definition statement

This place covers:

Testing on human or animal cells substances that produce changes on cell physical appearance e.g. shape, by effecting cellular cytoskeleton.

G01N 33/5029

{on cell motility}

Definition statement

This place covers:

Testing on human or animal cells substances that effect cells ability to move or rate of movement.

G01N 33/5032

{on intercellular interactions}

Definition statement

This place covers:

Testing on human or animal cells substances that effect physical interaction (attachment) between cells.

G01N 33/5035

{on sub-cellular localization}

Definition statement

This place covers:

Testing on human or animal cells substances that effect changes to movement of metabolites within a cell e.g. chaperone proteins, 2nd messengers.

G01N 33/5038

{involving detection of metabolites per se}

Definition statement

This place covers:

Testing of substances on human or animal cells that involves detection of an end product of a metabolic pathway.

G01N 33/5041

{involving analysis of members of signalling pathways}

Definition statement

This place covers:

Testing of substances on human or animal cells that involves analysis/determination of individual members of a signalling pathway and construction of the pathway itself.

G01N 33/5044

{involving specific cell types}

Definition statement

This place covers:

Testing of substances on specific human or animal cell types, not listed in G01N 33/5047 - G01N 33/5073 or on more than one listed cell type.

G01N 33/5082

{Supracellular entities, e.g. tissue, organisms}

Definition statement

This place covers:

The use of entities comprising more than one cell type and possessing a 3D structure e.g. tissues, organs, whole organisms.

References

Limiting references

This place does not cover:

Screening or testing for compounds for diagnosis of disorders/ assessment of conditions in vivo	A61K 49/0004

Special rules of classification

With respect to whole organisms, it is essential for classification in this subgroup that measurement is performed on a sample taken from the organism. Thus the chemical or biological compound under investigation may be administered to the organism, but the effect on the organism is measured by testing a sample removed from the organism.

If the effect is determined by direct measurement on the organism itself, i.e. in-vivo, e.g. muscle contraction, behavioural changes etc. classification is made in the appropriate subgroups in A61K (see above).

G01N 33/5085

{of invertebrates}

Definition statement

This place covers:

Use of whole invertebrates e.g. nematodes.

Special rules of classification

See G01N 2333/435 codes to indicate the type of invertebrate.

G01N 33/5088

{of vertebrates}

Definition statement

This place covers:

The use of whole vertebrates.

Special rules of classification

See G01N 2333/46 - G01N 2333/47 to indicate the type of vertebrate.

G01N 33/5091

{for testing the pathological state of an organism}

Definition statement

This place covers:

Assessing in human or animal cells the "pathological state". Includes susceptibility to disease, immune status, monitoring, therapy progress and animal models. Includes fertility screening for motile/non-motile sperm.

Special rules of classification

Methods of determining differential expression patterns as indicators of treatment profiles, therapy progress or immune status are classified in G01N 33/5023. Includes diagnosis if no other relevant symbol can be identified.

G01N 33/5094

{for blood cell populations (red blood cells G01N 33/80)}

Definition statement

This place covers:

Counting white cells/leukocyte types and distribution but must include addition of a marker e.g. fluorescent by a chemical process.

Special rules of classification

If there is no chemical process then G01N 1/00- G01N 30/00 or G01N 33/483-G01N 33/4972. G01N 33/569 and subgroups only if binding is involved.

G01N 33/5097

{involving plant cells (immunoassays of plant cells G01N 33/56961; unicellular algae, phytoplankton and photosynthetic bacteria in screening assays C12Q 1/025)}

Definition statement

This place covers:

The use of plant cells.

References

Informative references

Attention is drawn to the following places, which may be of interest for search:

Immunoassay/biospecific binding assay for plant cells, fungi, yeasts or algae	G01N 33/56961
Assays involving biological materials from bacteria	G01N 2333/37 - G01N 2333/43

Special rules of classification

In this subgroup no distinction is made between unicellular and multicellular algae.

G01N 33/52

Use of compounds or compositions for colorimetric, spectrophotometric or fluorometric investigation, e.g. use of reagent paper {and including single- and multilayer analytical elements (immunological elements G01N 33/54386; involving labelled immunochemicals G01N 33/58; for haemoglobin or occult blood G01N 33/72)}

Definition statement

This place covers:

Non-specific methods or for specific compositions having a general or multi use purpose not classifiable elsewhere, e.g. buffer solutions, stabilizing solutions or compositions.

References

Limiting references

This place does not cover:

Pure chemical staining not involving specific binding	G01N 1/30
Serum standard or control solutions	G01N 33/96

G01N 33/521

{Single-layer analytical elements}

Definition statement

This place covers:

Use of compound or composition in a single layer element wherein "element" means a unitary object such as a test strip, shaped device or sensor and which does not involve a binding reaction. e.g. use of a chemical substance as "timer" in a single layer dry test strip. Enzyme/substrate reaction is not considered as a "binding reaction".

G01N 33/523

{the element being adapted for a specific analyte}

Definition statement

This place covers:

Use of compound or composition in a single layer element which does not involve a binding reaction. The adaptation may also be structural e.g. specific pore size, ultrafiltration.

Special rules of classification

If the inventive contribution is a structural feature in an atypical element, classification should be made in G01N 33/528.

Synonyms and Keywords

In patent documents, the following words/expressions are often used with the meaning indicated:

"adapted"	"for" or "containing specific reagent not classifiable elsewhere".

G01N 33/525

{Multi-layer analytical elements}

Definition statement

This place covers:

Use of compound or composition in a multi layer element or lies in the arrangement of the layers and which does not involve a binding reaction. Standard elements are classified in this symbol only if the inventive contribution cannot be classified elsewhere.

G01N 33/526

{the element being adapted for a specific analyte}

Definition statement

This place covers:

Use of compound or composition in a multi layer element which does not involve a binding reaction. The adaptation may also be structural e.g. specific pore size, ultrafiltration.

Special rules of classification

If the inventive contribution is a structural feature in an atypical element, clarification should be made in G01N 33/528.

Synonyms and Keywords

In patent documents, the following words/expressions are often used with the meaning indicated:

"adapted"	"for" or "containing specific reagent not classifiable elsewhere".

G01N 33/528

{Atypical element structures, e.g. gloves, rods, tampons, toilet paper}

Definition statement

This place covers:

Use of compound or composition in an atypical element or lies in the structure or shape of the atypical element and which does not involve a binding reaction.

References

Informative references

Attention is drawn to the following places, which may be of interest for search:

Laminates in general	B32B

Special rules of classification

The following symbols G01N 33/53- G01N 33/577 include all types of complimentary binding systems, e.g. receptor/hormone, CHO/lectin not just immunoassay. Nucleic acid hybridisation is dealt with in C12Q.

Synonyms and Keywords

In patent documents, the following words/expressions are often used with the meaning indicated:

"immunochemical"	"material having binding properties".

G01N 33/53

Immunoassay; Biospecific binding assay; Materials therefor

Definition statement

This place covers:

In G01N 33/53 and subgroups the term "immunoassay"/"immunochemical" is taken to include any biospecific binding assay. Thus receptor - ligand based assays are classified under this heading (see G01N 33/566)

G01N 33/53 and subgroups cover:

- methods for performing immunoassays/specific binding assays
- preparation of "immunochemical" test materials e.g. conjugates, labelled conjugates for use in immunoassays, but not antibodies per se
- apparatus specially adapted for performing immunoassays. Emphasis on "specially adapted for immunoassay" General laboratory apparatus which may have a use in immunoassay is not classified here.

Immunoassays/specific binding assays for:

- analytes not provided for in subgroups of G01N 33/53

or in any of the subgroups G01N 33/62 - G01N 33/98

- pre-existing immune complex or autoimmune disease (G01N 33/564)
- micoorganisms (including human, animal, plant cells, algae, yeasts or fungi) (G01N 33/569)
- enzymes or isoenzymes (G01N 33/573) (Note: immunoassay for..)
- cancer (G01N 33/574)
- hepatitis (G01N 33/576)

References

Informative references

Attention is drawn to the following places, which may be of interest for search:

General laboratory apparatus	B01L 3/00
Immunoglobulins per se	C07K 16/00
Assays involving nucleic acid hybridization	C12Q 1/68

Special rules of classification

Classification in the subgroup G01N 33/53 itself is restricted to documents in which the inventive contribution lies in or is of such a broad nature that it cannot be easily be classified in a reasonable number of subgroups.

G01N 33/5302

{Apparatus specially adapted for immunological test procedures}

Definition statement

This place covers:

Shape or structure of apparatus rather than mechanisms of action of binding or components used. The apparatus is not involved as a solid phase component of the reaction (G01N 33/543-G01N 33/556).

References

Informative references

Attention is drawn to the following places, which may be of interest for search:

Automated systems	G01N 35/00
General laboratory apparatus	B01L

G01N 33/5306

{Improving reaction conditions, e.g. reduction of non-specific binding, promotion of specific binding}

Definition statement

This place covers:

Compositions e.g. stabilisers or methods which are of a general nature and applicable to both liquid and solid phase reactions and which result in improvement in the performance of a binding method.

Special rules of classification

If components claimed per se, see relevant headings for possible classification.

G01N 33/5308

{for analytes not provided for elsewhere, e.g. nucleic acids, uric acid, worms, mites}

Definition statement

This place covers:

Immunoassay/Biospecific binding assay for materials not identifiable in any other place e.g. G01N 33/68-G01N 33/96 e.g. PCB, environmental pollutants. Includes non-hybridisation e.g. antibody binding methods to nucleic acids, use of abzymes and/or aptamers and binding methods for carbohydrate molecules such as glucans/glycans and other non-blood sugars e.g. oligo- and polysaccharides which do not fit into the G01N 33/66 symbol.

References

Limiting references

This place does not cover:

Immunoassay/biospecific binding assay for plant cells, fungi or algae	G01N 33/56961
Immunoassay/Biospecific binding assay for animal cells	G01N 33/56966
Nucleic acid analysis using immunogens	C12Q 1/6804

Informative references

Attention is drawn to the following places, which may be of interest for search:

Enzymes with nucleic acid structure; e.g. ribozymes	G01N 2333/9005
Antibodies with enzymatic activity; e.g. abzymes	G01N 2333/901
Assays, e.g. immunoassays or enzyme assays, involving carbohydrates	G01N 2400/00 - G01N 2400/50

Special rules of classification

Direct immunoassay for nucleic acids are classified in the subgroup. Thus detection of nucleic acids using a specific nucleic acid binding antibody in a traditional immunoassay format e.g. ELISA.

Documents in which an immunological reaction is used to measure the presence or progress of a hybridization reaction are classified in C12Q 1/6804. For example the use of an antibody specific to double stranded DNA or the use of a hapten label on the hybridization strand which is subsequently detected immunologically.

Immunoassays in which the immunological reaction is detected by hybridizing a nucleic acid label are also classified in C12Q 1/6804 however in this technology it is often difficult to distinguish where the contribution over the state of the art lies, thus documents relating to immunoassays using nucleic acid labels are ADDITIONALLY classified in the appropriate subgroup of G01N 33/50 and allocated the G01N 2458/10 symbol.

G01N 33/531

Production of immunochemical test materials

Definition statement

This place covers:

Production of "immunochemical" materials but this is interpreted to include any material having specific complementary binding properties.

References

Limiting references

This place does not cover:

Binding peptides	C07K 14/00
Methods of producing monoclonal antibodies	C07K 16/00
Nucleic acid probes	C12Q 1/68
Production of combinatorial libraries	C40B

Special rules of classification

Only production methods are classified here. Where the inventive contribution lies in the use, classification should be made in G01N 33/58-G01N 33/60 but this symbol should also be searched.

G01N 33/536

with immune complex formed in liquid phase

Definition statement

This place covers:

The reaction takes place only in liquid phase.

An exception is made for G01N 33/542 where documents involving steric inhibition/signal modification assays in liquid and on solid phases are classified.

Special rules of classification

If it takes place in both liquid and solid phase, classification in G01N 33/53 should be considered.

Synonyms and Keywords

In patent documents, the following words/expressions are often used with the meaning indicated:

"immune complex"	"complex produced by binding components".

G01N 33/537

with separation of immune complex from unbound antigen or antibody

Definition statement

This place covers:

The manner of the separation or the carrying out of a separation step for the immune complex where none was used previously e.g. flow cytometry.

Synonyms and Keywords

In patent documents, the following words/expressions are often used with the meaning indicated:

"immune complex"	"complex produced by binding components".

G01N 33/5375

{by changing the physical or chemical properties of the medium or immunochemicals, e.g. temperature, density, pH, partitioning}

Definition statement

This place covers:

The link between the change in the property and the separation step.

Synonyms and Keywords

In patent documents, the following words/expressions are often used with the meaning indicated:

"immunochemicals"	"any material having specific complementary binding properties".

G01N 33/538

by sorbent column, particles or resin strip {, i.e. sorbent materials}

Definition statement

This place covers:

The manner of the solid phase separation or materials used.

G01N 33/539

involving precipitating reagent {, e.g. ammonium sulfate}

Definition statement

This place covers:

Precipitation of binding complex by some means, other than using use of further binding agent e.g. addition of chemical.

G01N 33/541

Double or second antibody {, i.e. precipitating antibody}

Definition statement

This place covers:

Precipitation of binding complex by using further binding agent e.g. antibody.

Special rules of classification

Reaction mechanisms involving more than one binding agent but which are not related to precipitation of a complex are classified depending on role of the second or third binding agent e.g. G01N 33/54306.

G01N 33/542

with steric inhibition or signal modification, e.g. fluorescent quenching

Definition statement

This place covers:

Steric inhibition or signal modification of reactions e.g. quenching or amplification of signal, Fluorescence Resonance Energy Transfer (FRET), modification of NMR signal, liquid crystal signal modification. Two-Hybrid systems where inventive contribution leads to production or modification directly or indirectly of proteins or signal markers are classified under this symbol.

Note: This subgroup is also used for classification of documents involving steric inhibition/ signal modification assays on solid phases even though this subgroup falls under the heading of G01N 33/536.

Special rules of classification

Two-Hybrid systems involving human or animal cells are classified here. If involving yeasts, C12Q 1/025, or in the appropriate symbol or heading relating to the inventive concept, e.g. G01N 33/542, C12N 15/1034, C12Q 1/6897.

G01N 33/543

with an insoluble carrier for immobilising immunochemicals

Definition statement

This place covers:

The insoluble carrier e.g. nature of carrier, material, multi layer structure. Standard solid phase ELISA assays are classified either under the material used in the test, the symbols for the subject under test or the use to which the test is applied depending on the inventive contribution.

References

Limiting references

This place does not cover:

Arrays of binding reagents and methods of producing such arrays where the inventive contribution lies in the manner of the production e.g. spotting or apparatus used in said methods	B01L, B01J

Synonyms and Keywords

In patent documents, the following words/expressions are often used with the meaning indicated:

"immunochemicals"	"any material having specific complementary binding properties".

G01N 33/54306

{Solid-phase reaction mechanisms}

Definition statement

This place covers:

The mechanism of the binding reaction, e.g. use of second and third binding reagents, mediators, spatial relationship between binding materials. Also includes cases where inventive contribution lies in design of the solid carrier where the design feature is linked to mechanism of action.

Special rules of classification

If inventive contribution lies in signal modification produced by mechanism, classification should be made in G01N 33/542.

G01N 33/54313

{the carrier being characterised by its particulate form}

Definition statement

This place covers:

The form e.g. shape, size, nature or novel use of the particulate insoluble carrier.

References

Limiting references

This place does not cover:

Novel nanoparticles as carriers	G01N 33/54346

G01N 33/5432

{Liposomes or microcapsules}

Definition statement

This place covers:

Inventive contribution lies in the specific nature of the particulate carrier. Includes liposomes, microspheres, artificial polymer constructs other than liposomes such as bilayer artefacts, micelles or vesicles.

G01N 33/54326

{Magnetic particles}

Definition statement

This place covers:

The magnetic nature of the particulate carrier, includes liposomes, microspheres, artificial polymer constructs other than liposomes such as bilayer artefacts, micelles or vesicles having magnetic properties. Includes polymer coated magnetic particles, irrespective of the binding materials attached to the polymer layer.

References

Informative references

Attention is drawn to the following places, which may be of interest for search:

With an insoluble carrier for immobilising immunochemicals, the carrier being inorganic	G01N 33/551 - G01N 33/553
Involving labelled substances with a particulate label, e.g. coloured latex	G01N 33/585

G01N 33/54333

{Modification of conditions of immunological binding reaction, e.g. use of more than one type of particle, use of chemical agents to improve binding, choice of incubation time or application of magnetic field during binding reaction}

Definition statement

This place covers:

The modification of conditions of the binding assay involving magnetic particles e.g. use of more than one particle type, use of chemical agents to improve binding, choice of incubation time, application of magnetic field.

References

Informative references

Attention is drawn to the following places, which may be of interest for search:

Extracting or separating nucleic acids from biological samples	C12N 15/1006 - C12N 15/1013

G01N 33/5434

{using magnetic particle immunoreagent carriers which constitute new materials per se}

Definition statement

This place covers:

The use of novel magnetic binding particle carrier materials per se in a binding assay involving magnetic particles.

References

Informative references

Attention is drawn to the following places, which may be of interest for search:

Assays involving biological materials from bacteria	G01N 2333/445 - G01N 2333/49
Extracting or separating nucleic acids from biological samples, e.g. pure separation or isolation methods; Conditions, buffers or apparatuses therefore	C12N 15/1006 - C12N 15/1013

G01N 33/54346

{Nanoparticles}

Definition statement

This place covers:

The use of novel nanoparticles. 'Nanoparticles' includes nanostructures such as nanotubes, fullerenes (buckyballs), graphene structures.

Special rules of classification

Graphene coatings are classified in G01N 33/54393

G01N 33/54353

{with ligand attached to the carrier via a chemical coupling agent (coatings G01N 33/54393)}

Definition statement

This place covers:

The method of the ligand attachment e.g. linker or the nature of the chemical coupling agent or bond type e.g. covalent, non-covalent.

References

Informative references

Attention is drawn to the following places, which may be of interest for search:

Coatings e.g. to improve reaction conditions, to reduce non specific binding or stability	G01N 33/54393

G01N 33/5436

{with ligand physically entrapped within the solid phase (liposomes G01N 33/5432; immunological test elements G01N 33/54386)}

Definition statement

This place covers:

The manner of the physical entrapment of the ligand within the solid phase.

References

Limiting references

This place does not cover:

Liposomes containing label or binding material	G01N 33/5432
Where entrapment is only one feature within a more complex system	G01N 33/54386

G01N 33/54366

{Apparatus specially adapted for solid-phase testing}

Definition statement

This place covers:

The design of the solid phase, devices, plates, e.g. shape of wells, interrelationship between components of a solid phase such as capillaries, reservoirs.

Special rules of classification

Apparatus whose design is intimately linked to the reaction mechanism, e.g. spatial arrangement on surface are classified in G01N 33/54306 as well. CD-like micro/nanoapparatus for analysis or "barcode" generation are normally classified under this symbol but if the inventive contribution lies in a particular feature which is classifiable elsewhere in G01N 33/543 - G01N 33/54386, multiple symbols should be given and all relevant areas searched. B01D-B01L /B01D- B01L should also be considered as there is overlap of subject matter.

G01N 33/54373

{involving physiochemical end-point determination, e.g. wave-guides, FETS, gratings}

Definition statement

This place covers:

The physicochemical manner of the end point determination from a solid phase test e.g. using methods such as surface plasmon resonance, total internal reflection systems, other (evanescent) methods using waveguides, methods using molecular imprinted polymers. See G01N 2600/00.

G01N 33/5438

{Electrodes}

Definition statement

This place covers:

The biological nature of the electrode or components thereof e.g. protein, enzyme, antibody.

Special rules of classification

If the electrode is only concerned with an enzyme reaction, than classification is made only in C12Q but electrodes in general where a binding reaction takes place are classified in both C12Q and G01N. Where the inventive contribution lies in the structure or non-biological nature of the electrode, see G01N 27/00- G01N 27/92. The C12Q 1/001 and subgroups are usually applied. C12Q symbols for specific enzymes e.g. urease or G01N 33/68-G01N 33/98 symbols for specific analytes e.g. sugar are also applied. Electrodes comprising nucleic acid components are classified in C12Q 1/6834, C12Q 1/6837, C12Q 1/6825.

G01N 33/54386

{Analytical elements}

Definition statement

This place covers:

The overall structure or design of the solid phase including combinations of known features e.g. multi layer structure, sample zones, detection zones. Test strips, could all be classified on this symbol where the assay method is standard e.g. ELISA or the analytes to be detected broad ranging and non-specific.

G01N 33/54393

{Improving reaction conditions or stability, e.g. by coating or irradiation of surface, by reduction of non-specific binding, by promotion of specific binding}

Definition statement

This place covers:

Methods e.g. coating or compositions e.g. blocking agents, stabilisers which are applicable to only solid phase reactions and which bring improvement in the performance of a binding method. If components claimed per se, see relevant headings for possible classification. Graphene coating layers are classified under this symbol.

G01N 33/557

using kinetic measurement, i.e. time rate of progress of an antigen-antibody interaction

Definition statement

This place covers:

Measuring the rate of a binding reaction rather than end point determination.

G01N 33/558

using diffusion or migration of antigen or antibody

Special rules of classification

Inventive contribution lies only in the overall structure, design or use of one dimensional flow, single layer, operable devices involving binding reactions. Where the inventive contribution merely lies in the arrangement of components e.g. sample zone, reaction zone, analysis zone which may all be present on a single layer device, classification should also be considered in G01N 33/54386.

G01N 33/564

for pre-existing immune complex or autoimmune disease {, i.e. systemic lupus erythematosus, rheumatoid arthritis, multiple sclerosis, rheumatoid factors or complement components C1-C9}

Definition statement

This place covers:

Detection of naturally occurring complexes that are found in body fluids and which are not formed as part of a reaction mechanism involving addition of reagents. Also includes where inventive contribution lies in the detection of autoimmune diseases per se, complement components or autoantibodies.

References

Informative references

Attention is drawn to the following places, which may be of interest for search:

Detection or diagnoses of diseases	G01N 2800/00 - G01N 2800/44

Special rules of classification

This symbol takes precedence over G01N 33/68 so that even if the inventive contribution lies in the detection of a specific protein/peptide relating to a specific autoimmune disease, complement fraction or autoantibody, classification should be made in this symbol. See also G01N 33/6854 - G01N 33/686.

G01N 33/566

using specific carrier or receptor proteins as ligand binding reagents {where possible specific carrier or receptor proteins are classified with their target compounds}

Definition statement

This place covers:

The use of a specific carrier or receptor protein as reagent in an assay. Where the inventive contribution lies in detecting a specific carrier or receptor protein per se or antagonist and/or agonist where possible, classification should be made in the area in which the protein to which the carrier is associated or target of receptor is found.

The term "specific" in this context is perhaps somewhat superfluous, meaning simply a receptor or carrier protein which has binding affinity to a particular target.

References

Informative references

Attention is drawn to the following places, which may be of interest for search:

Screening for receptors involving the use of cells (animal/human cells)	G01N 33/5005 - G01N 33/5094
Screening for receptors involving the use of cells (plant cells)	G01N 33/56961
Screening for receptors involving the use of cells (microorganisms)	C12Q

Special rules of classification

Where possible receptors/carrier proteins are classified with their targets in the appropriate subgroups of G01N 33/50. Thus methods involving a receptor to a hormone are classified in G01N 33/74 and not in this subgroup. Similarly methods involving a receptor to an Interleukin are classified in G01N 33/6869 only.

Due to the broad definition of this subgroup additional information symbols from the G01N 2333/00 range are used extensively with this subgroup to further characterize the receptor/carrier protein. If a specific symbol for the receptor already exists in the main trunk, the use of additional symbols is not necessary.

For example, a document describes a method for detecting an Interleukin using an Interleukin receptor. Classification will be in G01N 33/6869 only as allocation of an additional symbol for Interleukin (G01N 2333/7155) does not add value (merely duplication).

However, if the document were to disclose the Interleukin to be IL-3, classification would be in G01N 33/6869 and additionally G01N 2333/5403 for IL-3. The additional symbol has added value in this case.

Rules for use of the additional G01N 2500/00 range symbols:

The following guidance is applicable to both this subgroup and other subgroups where receptors etc. may be classified.

Screening for compounds for potential therapeutic value often involve testing the effect of a particular compound on the activity of a receptor or on the interaction of a receptor with its target. Documents relating to this type disclosure are classified with the appropriate receptor symbol, possibly with an additional symbol from the G01N 2333/00 range (see above), and an additional symbol from the G01N 2500/00 range, this G01N 2500/00 symbol being the identifier for the screening aspect. The G01N 2500/10 symbol is used to identify documents in which a cell is involved but the cell itself merely functions as a carrier for the receptor and does not have any further involvement in the test. In other words the test would function equally well with an isolated receptor. Documents in which the cell has an integral function in the test e.g. change in cell morphology/motility, or a particular type of cell is required e.g. T-cell are classified in G01N 33/5008 and subgroups.

G01N 33/567

utilising isolate of tissue or organ as binding agent

Definition statement

This place covers:

The use of unpurified crude isolates or fragments e.g. of membranes as a binding reagent.

Special rules of classification

In G01N 33/569-G01N 33/5735, where the inventive contribution lies in detection or analysis of specific material e.g. protein, neurotoxin, mycotoxin, sugar, enzyme indicative of microorganisms, the classification may also be under the material itself. Therefore search should also be made in the relevant G01N area or heading e.g. C07K, C12N, C12P. Also classified within the G01N 33/569 area are binding methods for syndromes or diseases specifically linked to a microorganism as the root cause, even if the matter under analysis itself does not originate from the microorganism e.g. raised interleukin levels. Multiple classification should be considered in such cases. Note that G01N 2800/00-G01N 2800/44 is not applicable in conjunction with G01N 33/569 and subgroups, G01N 33/571, G01N 33/574 or G01N 33/576.

G01N 33/569

for microorganisms, e.g. protozoa, bacteria, viruses

Definition statement

This place covers:

A broad spectrum binding method of detection for different types of microorganism, or where only a general reference is given without specific examples. Microorganism also includes animal and plant cell lines. I

Relationships with other classification places

Methods for sampling/physically isolating intact microorganisms are classified in C12Q 1/24 irrespective of what becomes of them afterwards. If the isolated microorganisms are further subject to immunoassay/biospecific binding assay a further symbol from G01N 33/569 or subgroups would be added.

Special rules of classification

If a general reference is given but with a small number of examples, the symbols for the specific microorganisms could also be given and used in search. G01N symbols can be used to highlight specific microorganisms if considered relevant. Includes binding methods for detecting lichen or algae.

Methods for detecting microorganisms by non-binding means - C12Q

G01N 33/56961

{Plant cells or fungi}

Definition statement

This place covers:

Immunoassay/Biospecific binding assay for plant cells, fungi, yeasts and algae

Special rules of classification

For the purposes of classification in this subgroup, no distinction is made between unicellular and multicellular algae.

Similarly yeasts are classified with fungi and no distinction is made between unicellular and multicellular fungi.

G01N 33/573

for enzymes or isoenzymes

Definition statement

This place covers:

Binding method for detecting enzymes, isoenzymes or substrates therefore.

Non binding methods using enzymes as a component.

References

Informative references

Attention is drawn to the following places, which may be of interest for search:

Enzymes; Proenzymes	G01N 2333/90 - G01N 2333/994
Enzymes per se	C12N
Non-binding methods of analysis involving enzymes	C12Q

G01N 33/574

for cancer

Definition statement

This place covers:

A general binding method for cancer which is not limited to any one specific form of cancer. Detection of cancer can involve identification of cell type, changes in metabolic activity and includes binding methods for monitoring the progress of cancer, susceptibility to cancer and sensitivity to cancer treatments or medications.

Special rules of classification

Methods where detection is by means of a binding reaction involving a specific marker not previously identified are classified in G01N 33/57484. Specific markers may be identified by use of relevant Indexing Code.

In G01N 33/574- G01N 33/57496, binding methods for detection of cancer may include detection of a marker. Classification in the relevant area for use of the marker, G01N 33/57484, or marker per se G01N 33/68 - G01N 33/6896, C07K, C12N should be considered.

In cases where a general method may detect specific cancers as listed in G01N 33/57411 - G01N 33/57449, multiple classification may be considered if the number of symbols is less than four. Otherwise use G01N 33/574.

For cancers, which subject matter is classified in G01N 33/574 and subgroups, the G01N 2800/00 indexing scheme is not used.

G01N 33/57407

{Specifically defined cancers}

Definition statement

This place covers:

Binding methods for detection of a specific defined cancer other than those listed in groups G01N 33/57411 - G01N 33/57449.

Special rules of classification

Aspects for the detection and monitoring of cancer that are found in more than one site or place as described by G01N 33/57411 - G01N 33/57449 should be further classified in G01N 33/57469 - G01N 33/57484 as appropriate.

G01N 33/57469

{involving tumor associated glycolinkage, i.e. TAG}

Definition statement

This place covers:

Binding method for detection and monitoring of cancer wherein a tumour associated glycolinkage e.g. TAG is detected which is a marker indicative of a form of cancer e.g. carcinoma that is found in more than one site or place as described by G01N 33/57411 - G01N 33/57449. Includes binding methods for the identification of antagonists and agonists of such markers.

Relationships with other classification places

Classification should also be considered in areas relevant to the nature of the marker per se e.g. C12N, C07K, C07D. The specific marker can also be identified by use of relevant Indexing Code.

G01N 33/57473

{involving carcinoembryonic antigen, i.e. CEA}

Definition statement

This place covers:

Binding method for detection and monitoring of cancer wherein a carcinoembryonic antigen e.g. CEA is detected which is a marker indicative of a form of cancer e.g. carcinoma that is found in more than one site or place as described by G01N 33/57411 - G01N 33/57449. Includes binding methods for the identification of antagonists and agonists of such markers.

Relationships with other classification places

Classification should also be considered in areas relevant to the nature of the marker per se e.g. C12N, C07K, C07D. The specific marker can also be identified by use of relevant Indexing Code. The specific marker can also be identified by use of relevant Indexing Code.

G01N 33/57476

{involving oncofetal proteins}

Definition statement

This place covers:

Binding method for detection and monitoring of cancer wherein oncofetal proteins are detected which are markers indicative of a form of cancer e.g. carcinoma that is found in more than one site or place as described by G01N 33/57411 - G01N 33/57449. Includes binding methods for the identification of antagonists and agonists of such markers.

Relationships with other classification places

Classification should also be considered in areas relevant to the nature of the marker per se e.g. C12N, C07K, C07D. The specific marker can also be identified by use of relevant Indexing Code.

G01N 33/5748

{involving oncogenic proteins}

Definition statement

This place covers:

Binding method for detection and monitoring of cancer wherein oncogenic proteins i.e. product of oncogenes such as ras are detected which are markers indicative of a form of cancer e.g. carcinoma that is found in more than one site or place as described by G01N 33/57411 - G01N 33/57449. Includes binding methods for the identification of antagonists and agonists of such markers.

Relationships with other classification places

Classification should also be considered in areas relevant to the nature of the marker per se e.g. C12N, C07K, C07D. The specific marker can also be identified by use of relevant Indexing Code.

G01N 33/57484

{involving compounds serving as markers for tumor, cancer, neoplasia, e.g. cellular determinants, receptors, heat shock/stress proteins, A-protein, oligosaccharides, metabolites}

Definition statement

This place covers:

Binding method for detection and monitoring of cancer wherein the material being detected is a marker not previously identified in G01N 33/57469- G01N 33/5748 which is indicative of a form of cancer e.g. carcinoma that is found in more than one site or place as described by G01N 33/57411 - G01N 33/57449. Non-specific metastasis markers are classified with this symbol. Includes binding methods for the identification of antagonists and agonists of such markers.

Relationships with other classification places

Classification should also be considered in areas relevant to the nature of the marker per se e.g. C12N, C07K, C07D. The specific marker can also be identified by use of relevant Indexing Code.

G01N 33/576

for hepatitis

Definition statement

This place covers:

General binding method for hepatitis e.g. able to identify ALL strains (HCV a, B, C), new strains e.g. HCV E or method using as means for identification components not identified in G01N 33/5761 - G01N 33/5768.

Special rules of classification

Where the inventive contribution lies in detection or analysis of specific material e.g. protein, sugar, enzyme indicative of hepatitis in general, the classification may also be under the material itself.

G01N 33/5761

{Hepatitis B}

Definition statement

This place covers:

Binding method for hepatitis B which can identify core and surface antigens or other HCV B antigen.

Special rules of classification

Where the inventive contribution lies in detection or analysis of specific material e.g. protein, sugar, enzyme indicative of hepatitis B, the classification may also be under the material itself.

G01N 33/577

involving monoclonal antibodies {binding reaction mechanisms characterised by the use of monoclonal antibodies; monoclonal antibodies per se are classified with their corresponding antigens; (G01N 33/53 - G01N 33/576 take precedence)}

Definition statement

This place covers:

Mechanism of the binding method involving monoclonal antibodies.

References

Limiting references

This place does not cover:

Standard binding assays using monoclonal antibodies	G01N 33/53 - G01N 33/576
Where inventive contribution lies in use of monoclonal antibody, classification should be made in the symbol for the relevant antigen	G01N 33/68 - G01N 33/94

Special rules of classification

The specific antigen can also be identified by use of relevant Indexing Code.

Please note that in the following symbols, it is not a requirement that the method of analysis be limited to a binding method.

G01N 33/579

involving limulus lysate

Definition statement

This place covers:

Detection of or use of limulus lysate or derivatives thereof in methods of chemical analysis of biological material.

G01N 33/58

involving labelled substances (G01N 33/53 takes precedence)

Definition statement

This place covers:

Detection of or use of labelled substances in methods of chemical analysis of biological material wherein the label is unspecified or is not identified by G01N 33/581 - G01N 33/588 e.g. stable isotopes. Typically the use of labels in immunoassay/biospecific binding assay where the inventive contribution lies in the label.

Relationships with other classification places

Labels per se are classified under the relevant heading according to the nature of the label e.g. C07D-C07K.

References

Limiting references

This place does not cover:

Immunoassay; Biospecific binding assay; Materials therefor	G01N 33/53

Application-oriented references

Examples of places where the subject matter of this place is covered when specially adapted, used for a particular purpose, or incorporated in a larger system:

For testing in vivo	A61K 49/00
Preparations containing radioactive substances for use in therapy or testing in vivo	A61K 51/00

G01N 33/581

{with enzyme label (including co-enzymes, co-factors, enzyme inhibitors or substrates)}

Definition statement

This place covers:

Detection of or use of labelled substances in methods of chemical analysis of biological material wherein the label is an enzyme. Enzyme includes co-factors, co-enzymes, substrates and inhibitors of enzymes.

G01N 33/582

{with fluorescent label}

Definition statement

This place covers:

Detection of or use of labelled substances in methods of chemical analysis of biological material wherein the label is fluorescent. "Fluorescent" includes luminescent, chemiluminescent, bioluminescent labels.

G01N 33/583

{with non-fluorescent dye label}

Definition statement

This place covers:

Detection of or use of labelled substances in methods of chemical analysis of biological material wherein the label is non-fluorescent dye i.e. chromogen, visible light spectrum dye.

G01N 33/585

{with a particulate label, e.g. coloured latex}

Definition statement

This place covers:

Detection of or use of labelled substances in methods of chemical analysis of biological material wherein the label is of a particulate nature, e.g. coloured latex, colloidal metal sol, particulate inorganic pigments.

Relationships with other classification places

Search should also be considered in headings relevant to the chemical nature of the label e.g. C07D - C07K and the nature of the material being detected by the label e.g. G01N 33/68 - G01N 33/94, C07K, C12N, C12Q.

G01N 33/586

{Liposomes, microcapsules or cells}

Definition statement

This place covers:

Detection of or use of labelled substances in methods of chemical analysis of biological material wherein the label is of a particulate nature and is a liposome, microcapsule, cell or cell fragment, virus-like particle or artificial polymer constructs such as bilayer artefacts, micelles or vesicles.

Special rules of classification

Search may also be required in relevant G01N 33/58 - G01N 33/588 area if said particle contains within it a specific marker, e.g. fluorescent compound, enzyme.

G01N 33/587

{Nanoparticles}

Definition statement

This place covers:

The detection or use of novel nanoparticles. "Nanoparticles" includes nanostructures such as nanotubes, fullerenes (buckyballs), graphene structures.

Special rules of classification

Graphene coatings are classified in G01N 33/54393

G01N 33/588

{with semiconductor nanocrystal label, e.g. quantum dots}

Definition statement

This place covers:

The use of semiconductor nanocrystal labels such as quantum dots, which are metal chelates (Zn,Cd,Se,S) of controlled crystal size leading to tuneable fluorescent or electronic properties.

G01N 33/60

involving radioactive labelled substances

Definition statement

This place covers:

Detection of or use of labelled substances in methods of chemical analysis of biological material wherein the label is radioactive.

References

Informative references

Attention is drawn to the following places, which may be of interest for search:

As tracers	G21H 5/02

G01N 33/66

involving blood sugars, e.g. galactose

Definition statement

This place covers:

The detection of or use of the sugar itself. Mere disclosure of sugar in a method of chemical analysis is not sufficient for classification.

Relationships with other classification places

Detection of glucose using glucose oxidase see C12Q 1/006, C12Q 1/54.

Special rules of classification

Binding methods involving non-blood sugars e.g. oligo- and/or polysaccharides are classified in G01N 33/5308. Non binding methods of detection of sugars are classified in G01N 33/50. Specific sugars may be identified using G01N 2400/00 - G01N 2400/50.

Where the inventive contribution lies in detection or use of proteinaceous or peptidic material having narcotic, drug or pharmaceutical activity, classification is made in G01N 33/68+ but search should also be made in the relevant G01N 33/94- G01N 33/9493 symbol. Specific diseases may be identified using G01N 2800/00- G01N 2800/44.

G01N 33/68

involving proteins, peptides or amino acids {(involving lipoproteins G01N 33/92)}

Definition statement

This place covers:

The detection of or use of proteins and amino acids in methods of chemical analysis of biological material not defined in G01N 33/6854 - G01N 33/6896 and methods of a general nature.

Relationships with other classification places

Detection and use of enzymes: C12Q.

Special rules of classification

See G01N for identification of specific protein or families of proteins.

G01N 33/6803

{General methods of protein analysis not limited to specific proteins or families of proteins}

Definition statement

This place covers:

Inventive contribution is the generalised identification of protein mixtures rather than individual proteins and diseases related thereto. Includes methods of protein analysis such as 2D electrophoresis which produce proteomic patterns for determining differential expression for e.g. monitoring disease state or treatment progress.

References

Limiting references

This place does not cover:

Sequencing	G01N 33/6818 - G01N 33/6824

Special rules of classification

In silico based disclosures of a general nature are classified under this symbol. In silico disclosure relating to specific target (protein, receptor, modulator etc.) should be classified under the most appropriate symbol for the target.

G01N 33/6818

{Sequencing of polypeptides}

Definition statement

This place covers:

The sequencing of polypeptides wherein said determination must involve a denaturation or digestion of the source protein and includes a comparison step between the peptides fragments generated and a database.

Special rules of classification

Whenever the inventive contribution lies in the use of mass spectrometry, classification should be made in G01N 33/6848(A).

G01N 33/6842

{Proteomic analysis of subsets of protein mixtures with reduced complexity, e.g. membrane proteins, phosphoproteins, organelle proteins}

Definition statement

This place covers:

The analysis of just a subset of proteins (sometimes referred to as "subproteomes"), e.g. membrane-bound proteins, phosphorylated proteins (might involve IMAC (Immobilized Metal ion Affinity Chromatography)), mitochondrial proteins, cysteine-containing proteins (might involve ICATTM (Isotope-Coded Affinity Tag)), glycosylated proteins, C-terminally modified proteins, etc. Covers all approaches, where the complexity of an initial set or mixture of proteins (sometimes referred to as "proteome") is reduced by analysing just a subset (with or without physical separation from the other proteins).

G01N 33/6845

{Methods of identifying protein-protein interactions in protein mixtures}

Definition statement

This place covers:

Identification of protein-protein interactions in libraries or protein mixtures. Includes interaction of protein-polypeptides in domains, lead compound identification, identification of binding sites and generalised screening for individual proteins from a library or protein mixture.

G01N 33/6848

{Methods of protein analysis involving mass spectrometry}

Definition statement

This place covers:

The analysis of proteins by mass spectrometry wherein the mass spectrometry method is unspecified or is not covered by G01N 33/6851, e.g. ESI (Electrospray Ionisation), EI (Electron Ionisation), CI (Chemical Ionisation), FAB (Fast Atom Bombardment), SIMS (Secondary Ion Mass Spectrometry).

Special rules of classification

Indexing Code-code G01N 2458/15 should be considered if non-radioactive isotope labels are involved (e.g. ICATTM (Isotope-Coded Affinity Tag), iTRAQTM (isobaric Tags for Relative and Absolute Quantification), GIST (Global Internal Standard Technology), SILAC (Stable Isotope Labelling by Amino acids in Cell culture), SIRMS (Stable Isotope Ratio Mass Spectrometry), IDBESTTM (Isotope-Differentiated Binding Energy Shift Tags)).

G01N 33/6854

{Immunoglobulins}

Definition statement

This place covers:

The detection of or use of immunoglobulins in methods of chemical analysis of biological material e.g. detection of specific antibody indicative of disease or infection or use in a method of modified antibody.

Special rules of classification

Detection of autoantibodies is classified in G01N 33/564. The mere use of antibodies lacking any inventive contribution in standard immunoassay methods should not be classified under this symbol.

G01N 33/686

{Anti-idiotype}

Definition statement

This place covers:

The detection of or use of anti-idiotypic antibodies in methods of chemical analysis of biological material e.g. detection of specific antibody indicative of autoimmune disease such as lupus or arthritis or use in a method of modified anti-idiotypic antibodies or use of anti-idiotypic antibodies in an inventive mechanism.

Special rules of classification

The mere use of anti-idiotypic antibodies lacking any inventive contribution in standard immunoassay methods should not be classified under this symbol.

G01N 33/6863

{Cytokines, i.e. immune system proteins modifying a biological response such as cell growth proliferation or differentiation, e.g. TNF, CNF, GM-CSF, lymphotoxin, MIF or their receptors}

Definition statement

This place covers:

The detection of or use of cytokines and fragments thereof other than interferon or interleukin in methods of chemical analysis of biological material. "lymphokine" is an outdated and imprecise term no longer applied. Cytokine is defined as an immune system protein that modifies a biological response e.g. cell growth, proliferation or differentiation. Examples are TNF, CNF, GM-CSF, lymphotoxin and MIF. Includes cases where the inventive contribution lies in detection of, use of or identification of receptors, antagonists and agonists of cytokines other than interferon or interleukin.

G01N 33/6872

{Intracellular protein regulatory factors and their receptors, e.g. including ion channels}

Definition statement

This place covers:

The detection of or use of intracellular protein regulatory factors e.g. ion channels, translation factors, transcription factors, growth factors or fragments thereof in methods of chemical analysis of biological material. Includes cases where the inventive contribution lies in detection of, use of or identification of receptors, antagonists and agonists of intracellular protein regulatory factors. Includes specifically designated CD molecules and ligands therefore whose function is not classifiable elsewhere.

Relationships with other classification places

Classification should also be considered in C07K with regard to the factor itself.

Special rules of classification

When the regulatory effect is immunosupression, classification should also be considered in G01N 33/9493. Individual factors should be identified via Indexing Codes - see G01N 2333/475 - G01N 2333/515.

G01N 33/6875

{Nucleoproteins}

Definition statement

This place covers:

The detection of or use of nucleoproteins or fragments thereof in methods of chemical analysis of biological material. Nucleoprotein includes histones, nuclear orphan receptors e.g. DAX-1, MINOR, PPAR-gamma and any other proteins specifically found in the cell nucleus.

Relationships with other classification places

Classification in C07K should be considered.

G01N 33/6878

{in eptitope analysis}

Definition statement

This place covers:

Detection of or use of proteins, oligopeptides, peptides or amino acids in the identification and analysis of epitopes.

Special rules of classification

The mere sequencing or identification of oligopeptides, peptides and proteins should be classified in either G01N 33/68 or the appropriate symbol for the source or nature of the material being sequenced. An appropriate G01N code can be used to identify the specific material whose epitope is being analysed.

G01N 33/6887

{from muscle, cartilage or connective tissue}

Definition statement

This place covers:

The detection of or use of proteins, fragments thereof or receptors originating in and distinctive of muscle including heart, cartilage or connective tissue e.g. actin, myosin, collagen in methods of chemical analysis of biological material.

Relationships with other classification places

Search Classification in C07K should be considered.

References

Informative references

Attention is drawn to the following places, which may be of interest for search:

Disease that relates to cardiovascular disease	G01N 33/6893

Special rules of classification

See G01N 2800/382 , G01N 2333/78.

G01N 33/6893

{related to diseases not provided for elsewhere}

Definition statement

This place covers:

The detection of or use of proteins, fragments thereof or receptors originating in and distinctive of diseases not covered in G01N 33/6875 - G01N 33/689 e.g. liver cirrhosis, cardio-vascular disease (angina, stroke), Schizophrenia in methods of chemical analysis of biological material.

Relationships with other classification places

Classification in C07K should be considered.

Special rules of classification

Appropriate Indexing Codes G01N 2800/00 - G01N 2800/44 should be considered.

G01N 33/6896

{Neurological disorders, e.g. Alzheimer's disease}

Definition statement

This place covers:

The detection of or use of proteins, fragments thereof or receptors originating in and distinctive of neurological diseases e.g. Alzheimer's Disease, Huntingdon's Chorea, Motor Neurone Disease, prions associated with BSE, Creutzfeld-Jakob Disease, Migraine in methods of chemical analysis of biological material.

Relationships with other classification places

Classification in C07K should be considered.

Special rules of classification

Appropriate Indexing Codes G01N 2800/00 - G01N 2800/44 should be considered.

G01N 33/74

involving hormones {or other non-cytokine intercellular protein regulatory factors such as growth factors, including receptors to hormones and growth factors}

Definition statement

This place covers:

Cases where the inventive contribution lies in detection of, use of or identification of hormones and receptors, antagonists and agonists of hormones e.g. G-protein coupled receptors.

Relationships with other classification places

Classification in C07K should be considered.

Special rules of classification

Intracellular protein regulatory factors are classified in G01N 33/6872. See G01N 2333/575 - G01N 2333/70 , G01N 2400/00 - G01N 2400/50.

Glossary of terms

In this place, the following terms or expressions are used with the meaning indicated:

Hormone	intercellular regulatory factors

G01N 33/76

Human chorionic gonadotropin {including luteinising hormone, follicle stimulating hormone, thyroid stimulating hormone or their receptors}

Definition statement

This place covers:

The detection of or use of human chorionic gonadotrophin like hormones e.g. HCG, LH, FSH, TSH and fragments thereof in methods of chemical analysis of biological material. Includes cases where the inventive contribution lies in detection of, use of or identification of receptors, antagonists and agonists of such materials.

Relationships with other classification places

Classification in C07K should be considered.

Special rules of classification

See G01N 2333/59.

G01N 33/88

involving prostaglandins {or their receptors}

Definition statement

This place covers:

The detection of or use of prostaglandins, derivatives or fragments thereof or receptors therefore in methods of chemical analysis of biological material. Includes eicosanoids such as thromboxanes, leukotrienes and lipoxins and other arachidonic acid derived signal molecules.

Special rules of classification

Classification should be considered in C07C.

G01N 33/92

involving lipids, e.g. cholesterol {, lipoproteins, or their receptors (steroid hormones G01N 33/743)}

Definition statement

This place covers:

The detection of or use of lipids or receptors therefore in methods of chemical analysis of biological material. The term "lipid" is broadly interpreted and includes cholesterol, apolipoproteins, gangliosides (glycolipids) and fatty acids. See G01N 2405/00 - G01N 2405/10

Special rules of classification

In the following symbols G01N 33/94 - G01N 33/9493, where the narcotic, drug or pharmaceutical material itself is of a proteinaceous or peptidic nature, classification is made in G01N 33/68-G01N 33/6896.

In the following symbols G01N 33/94 - G01N 33/9493, the narcotic, drug or pharmaceutical material may have activity that is covered by more than one symbol. Classification should be given in the individual relevant symbols for each activity if the number is small or in G01N 33/94 if the number is large or the activity unspecified or broad spectrum.

There is also overlap with G01N 33/5005 and G01N 33/5008 when the inventive contribution lies in screening for lead compounds having activity covered by G01N 33/94 - G01N 33/9493 so classification should also be considered in these symbols.

Classification and search should also be considered in the relevant heading for the nature of the material e.g. C07C - C07K.

G01N 33/94

involving narcotics {or drugs or pharmaceuticals, neurotransmitters or associated receptors}

Definition statement

This place covers:

Detection of amount/concentration of narcotic, drug or pharmaceutical material or receptors therefore where the material has activity undefined in G01N 33/9406 - G01N 33/9493 or multiple activity.

G01N 33/96

involving blood or serum control standard

Definition statement

This place covers:

Production and use of materials for standardising blood and/or serum control e.g. artificial red blood cells of defined size for calibrating flow cytometry, artificial whole blood, serum or plasma for calibrating biosensors. Other standard/calibration solutions e.g. protein standard solutions may also be found here. See also G01N 2496/00 - G01N 2496/80.

G01N 33/98

involving alcohol, e.g. ethanol in breath

Definition statement

This place covers:

Detection of amount/concentration of ethanol in body fluids, e.g. breath, blood.

References

Informative references

Attention is drawn to the following places, which may be of interest for search:

Investigating the characteristics of particles (e.g.. cells), cell sorting etc.	G01N 15/00 - G01N 15/1484
Optical analysis	G01N 21/00 - G01N 21/958
Electrical methods of analysis, non-chemical analysis methods of biological and non-biological material	G01N 27/00 - G01N 27/92, G01N 33/483 - G01N 33/4972, G01N 33/00 - G01N 33/46
Analysis of non-biological materials using chemical indicators	G01N 31/22 - G01N 31/229
Automated analytical systems	G01N 35/00 - G01N 35/1097
New plants or processes for obtaining them	A01H 1/00 - A01H 17/00
Rearing or breeding animals, including genetically modified animals	A01K 67/027 - A01K 67/0333
Sensors	A61B 5/14532 - A61B 5/14558 , C12Q 1/001 - C12Q 1/006, G01N 33/48707 - G01N 33/48785
Preparations for medical, dental or toilet purposes, sterilizing, disinfecting	A61K 6/00, A61L 2/00 - A61L 33/0094
Non-biological pharmaceutical preparations	A61K 31/00 - A61K 31/80, A61K

Biological Pharmaceutical preparations	A61K 35/00 - A61K 48/00, A61K 38/00 - A61K 39/44, A61K 45/00 - A61K 45/05, A61K
Separation for manufacturing purposes, bulk separation	B01D 15/02 - B01D 15/08, B01J 20/00 , B01J 39/00 - B01J 49/90
Chemical processes, apparatus	B01J 3/00 - B01J 12/02, B01J 14/00 - B01J 19/325
Especially manufacturing of molecular arrays, libraries	B01J 19/0046
Laboratory Apparatus	B01L
Magnetic systems	B03C 1/00 - B03C 9/00, H01F 1/00 - H01F 1/447, H01F 7/02 - H01F 7/04, H01F 10/00 - H01F 10/30, H01F 13/00 - H01F 13/006, H01F 41/00 - H01F 41/127, H01F 41/14 - H01F 41/28
Steroids	C07C 401/00 - C07C 401/00, C07J 1/00 - C07J 75/005
Sugars (nucleotides, nucleosides, nucleic acids)	C07G 1/00 - C07G 17/008, C07H 1/00 - C07H 23/00
Peptides of less than 20 amino acids and general methods for peptide preparation	C07K 1/00 - C07K 11/02, C07K 17/00- C07K 17/14
Proteins of > 20 amino acid - from viruses - from bacteria - from fungi - from algae - from lichens - from plants - from animals -others	C07K 14/00 - C07K 14/825, C07K 14/005 - C07K 14/19, C07K 14/195 - C07K 14/365, C07K 14/37 - C07K 14/40, C07K 14/405, C07K 14/41, C07K 14/415 - C07K 14/43, C07K 14/435 - C07K 14/79, C07K 14/795 - C07K 14/825, C12R 1/00 - **C12R1/92**
Antibodies, pharmaceutical preparations thereof	C07K 16/00 - C07K 16/468, A61K 39/00 - A61K 39/44
Microorganisms and viruses	C12N 1/00 - C12N 1/38, C12N 7/00 - C12N 7/08
Undifferentiated human, animal or plant cells	C12N 5/00 - C12N 5/166

Enzymes and immobilised enzymes	C12N 9/00 - C12N 9/99, C12N 11/00 - C12N 11/18
Mutation or genetic engineering	C12N 15/00 - C12N 15/907
Fermentation or enzymatic processes for chemical synthesis or separation of optical isomers.	C12P 1/00 - C12P 41/009
Methods of analysis involving nucleic acids	C12Q 1/68 - C12Q 1/708
Bioinformatics	G16B

Special rules of classification

Where inventive contribution lies in design of apparatus e.g. relationship of structural components or means for determination e.g. biosensor, search and classification should be considered in the relevant headings e.g. G01N 33/54366, G01N 33/54373, G01N 33/5438, G01N 33/54386, C12Q, G01N 7/00-G01N 31/22.

Reference is made to the Guide to the IPC. (http://www.wipo.int/classifications/ipc/en/guide/guide_ipc_2009.pdf).

The basic structure and principles of classification are laid out and defined. Particular attention should be given to the presence of Warnings and Notes found at all levels of the hierarchy for G01N.

Definitions

Section: G

Class: G01

Subclass: G01N

Main group G01N xx/00

Subgroups: G01N xx/02. G01N has subgroups with 2-7 dot entries.

In such a wide and diverse area as covered by G01N, what criteria are applied and the manner of application form the two main areas to consider.

Criteria

In order to classify an invention/document for search and retrieval purposes, the inventive contribution must first be identified, that is, what does the invention add beyond that already known? The analysis is similar to that carried out in the judgement of inventive step when assessing the contribution to the art. Of course, the objective contribution can only be clearly defined after a search has been made but the claims and the applicant's own description of the prior art in relation to the invention provide a good basis to form an initial opinion. Conventional techniques, standard methods and known reagents do not normally form the basis for the inventive contribution.

EXAMPLE: A new antigen is detected by conventional liquid or solid phase immunoassay using homogeneous or heterogenous methods. Classification is based around the antigen, not the methods used to detect it.

Application

Once the inventive contribution has been identified, it is necessary to determine which classification symbol(s) to apply. An initial analysis to determine whether chemical analysis of biological matter is taking place, can be quickly made to exclude non-G01N matter. The next step is to decide in which of the two classification branches of G01N the inventive concept lies i.e, in simple terms, to what

extent does the inventive contribution concern a process/device or a reagent/analyte as a group or individual?

EXAMPLE: A process/device could be a method for toxicology testing or a dry test strip. A reagent/analyte could be a specific material such as apolipoprotein or a group such as labels, clotting factors, microorganisms, etc.

It is very common that the inventive concept may be found to be present in both classification branches.

EXAMPLE: The inventive concept lies in the production and use of a label. This subject matter is covered by both G01N 33/532-G01N 33/535 (process/device) and G01N 33/58- G01N 33/60 (reagent/analyte).

EXAMPLE: The inventive concept lies in the production and use of a label. A new means for production of labelled materials takes G01N 33/532-G01N 33/535 as primary symbol but a novel label used in a conventional method for producing labelled materials takes G01N 33/58-G01N 33/60 as the primary symbol.

Once it has been decided in which classification branch (process/device or analyte/reagent) the primary inventive contribution lies, the most suitable classification symbol within the branch is identified using the LAST PLACE RULE, i.e the sub group having the highest number of dot entries or last listed in the key of equal dot entry status.

EXAMPLES:

- The inventive contribution lies in a new binding method for testing for HIV. Possible symbols are G01N 33/53 (3 dot, binding assay), G01N 33/569 (4 dot, microorganisms), G01N 33/56983 (5 dot, viruses) or G01N 33/56988 (6 dot, AIDS or HTLV). The correct symbol is G01N 33/56988.
- The inventive contribution lies in the use of bilirubin as a serum control standard. Possible symbols are G01N 33/72 (3 dot, involving blood pigments, e.g. bilirubin or G01N 33/96 (3 dot, involving serum standards). The correct symbol is G01N 33/96 as it is the last listed of the appropriate symbols of equal status.

With experience, many of the early steps are quickly by-passed. Subject matter that covers a broad spectrum, but gives examples that lie in more than one subgroup are classified in the most appropriate lower dot entry symbol.

EXAMPLE: The inventive contribution lies in a new broad spectrum binding method and gives examples comprising testing for HIV, Mycoplasma and Plasmodium. Possible symbols are G01N 33/53 (3 dot, binding assay), G01N 33/569 (4 dot, microorganisms), G01N 33/56905 (5 dot, protozoa), G01N 33/56911 (5 dot, bacteria), G01N 33/56933 (6 dot, Mycoplasma), G01N 33/56983 (5 dot, viruses) or G01N 33/56988 (6 dot, AIDS or HTLV). The correct symbol is G01N 33/569 as the inventive concept cuts across the higher level subgroups. The specific antigens tested from the differing microorganisms, could if desired, be identified by use of Indexing Codes e.g. G01N 2333/16 (HIV antigen).

Where the inventive contribution is specific but has no appropriate symbol, the classification symbol of the generalised subject matter is applied.

EXAMPLE: The inventive contribution lies in a binding method for a new virus. Possible symbols are G01N 33/53 (3 dot, binding assay), G01N 33/569 (4 dot, microorganisms), G01N 33/56983 (5 dot, viruses), G01N 33/56988 (6 dot, AIDS or HTLV) or G01N 33/56994 (6 dot, Herpatoviridae). The correct symbol is G01N 33/56983, a general subgroup for viruses.

In order to cover all aspects of the inventive contribution, further symbols from either within the same classification branch of G01N or from the other classification branch of G01N should be added. Additional symbols are required in the case of non-unity cases to classify the separate inventions. Consideration must also be given to related symbols outside of the G01N area, in particular relating to the subject matter of the independent claims.

Indexing Codes are used in G01N to identify specific matter e.g. microorganisms, proteins, sugars, lipids, enzymes, components of analysis e.g. stains, buffers or specific diseases. Their use is NOT compulsory and it is left to the discretion and judgement of each examiner whether to use Indexing Codes or not. It is recommended to use Indexing Codes to highlight subject matter which is significant but is secondary or not covered by ECLA G01N. The use of an excessive number of Indexing Codes per case can reduce their value as a search tool.

G01N is not the primary area for applications that contain independent (per se) claims to materials such as chemicals, proteins, antibodies, nucleic acids. These should be transferred to the appropriate area (e.g. C07H, C07K, C12P, C12N, C12Q 1/68) with G01N classification symbols only being applied if subject matter claimed is of particular relevance. Applications containing independent (per se) claims to apparatus where the testing of biological material is not the main inventive contribution should be transferred to the appropriate apparatus areas (e.g. B01D, B01L, B01J, G01N 35/00) with G01N symbols being applied only when the testing of the biological material is of particular relevance. Testing and analytical methods where the inventive contribution lies in a non-chemical method of analysis e.g. infra-red spectrometry, or material being analysed should be transferred to G01N 1/00-G01N 33/46.

Summary of classification approach:

- Identify inventive contribution of the application
- Determine if G01N 33/50 subject matter or not
- Decide whether the inventive contribution lies in a process/device or reagent/analyte. If both, identify where is the main emphasis.
- Allocate most appropriate symbol(s) using Last Place Rule
- Consider relevant Indexing Codes
- Consider related areas

Screening

Methods of screening, where possible, are classified under the symbol most appropriate to the inventive contribution.

Example: a screening method using T-cells wherein the inventive contribution lies in identifying compounds binding to a GABA receptor is classified under the symbol for GABA (G01N 33/9426) rather than G01N 33/5047. In contrast, a screening method characterised by features of the method such as use of particular cells or structures, even if only demonstrated by a single example, is classified in the area G01N 33/5005 - G01N 33/5097+ rather than the symbol relating to the material screened for in the example. If required, an Indexing Code can be used to index the material.

Use of 'omic' technology

A recent development in the field of chemical testing and diagnostics is the use of '..omics' technology, i.e. analysis of a large group of similar or related biological molecules wherein expression patterns are used to highlight macro-scale changes, study interactions between molecules or identify markers which may be linked to specific diseases or conditions. 'Omic' technology are regarded as tools for a purpose and inventions using conventional 'omic' technology are classified with regard to the end goal or identified marker. This approach is analogous to the use of monoclonal antibodies.

Example:

- G01N 33/5023 (metabolomics)
- G01N 33/66 (glucomics)
- G01N 33/6806- G01N 33/6851 (genomics, proteomics)
- G01N 33/92 (lipidomics)

Inventions where the inventive contribution lies in the 'omic ' technique itself are classified in the relevant group for the contribution.

Example:

A proteomic technique where the inventive contribution lies in the use of coating composition to e.g. improve binding of the capture molecules to the solid phase, is classified in G01N 33/54393.

Indexing Code G01N 2570/00 can be used if it is desired to specifically highlight the use of 'omic' technology.

Bioinformatics

Inventions involving the use of bioinformatic methods may also be classified in the G01N area. If the inventive contribution lies in the means or method to obtain results which are then processed by conventional bioinformatics, the subject matter is classified in the relevant part in G01N. If the inventive contribution resides in the bioinformatic aspects, the case should be discussed with G16B which may be better suited to take such subject matter.

G01N 35/00

Automatic analysis not limited to methods or materials provided for in any single one of groups G01N 1/00 - G01N 33/00; Handling materials therefor

Definition statement

This place covers:

Automated apparatus of general applicability in laboratory analytical methods.

Automated clinical laboratory equipment not limited to specific methods.

Methods of operating such apparatus in automatic analysis.

Handling samples and reagents in automatic analysers. Fluid samples may flow along a tube system, or be carried in individual containers.

Relationships with other classification places

Border with B01L:

Pipettes and burettes are classified in B01L 3/02 and subgroups according to their liquid-handling features. They are also classified in G01N 35/10 if they have features related to their use in automatic analysis, such as means for relative movement of pipette and sample containers, special control systems, etc.

Border with B01J 19/00

G01N 35/00 is limited to analyses. Automated apparatus for synthesis are classified in subclass B01J 19/0046.

Border with other parts of G01N

G01N 35/00 covers automated analyses not limited to specific methods. There are for instance specific groups covering automation of specific methods classified in other parts of G01N (see groups listed in the references relevant to classification in this main group).

Border with G05 (e.g. G05B, G05D)

The subgroup G01N 35/00584 deals with the control arrangements for automatic analysers: it is limited to the control of the process as defined by the lower groups (i.e. quality control; calibration; communications; scheduling). It covers neither regulating systems (see G05B) nor the "control" of variables such as position/force/pressure (see G05D):

for example WO2004046834 is classified in G01N 35/00871 for the communication with LIS (Laboratory Information System) and in groups of G05B 19/00 for the control of motors and scanners of the analyser.

Overlap with other groups

In many cases the subject-matter lies between G01N 35/00 and other groups within or outside G01N: This applies particularly to physical/chemical processes and laboratory analysers classified as such elsewhere (e.g. G01N 15/14, G01N 30/00, B01J 19/00, C12M, H01J 49/00) or to laboratory analysers having a relevant feature classified elsewhere (B01D, B01L, B01F, F16K,...). In all those cases, documents should be circulated for classification to all relevant sections of the classification: for example:

US2009287356 is classified in G01N 35/00613 (quality control for automatic analysers) and in G01N 15/1427 (flow-cytometer with synchronisation of its components or gating by control arrangement).

GB2436616 is classified in G01N 35/0098 (automatic analyser involving analyte bound to insoluble magnetic carrier), in B01L 3/5027 (containers with integrated microfluidic structures) and G01N 33/54366 (apparatus specially adapted for solid-phase testing).

EP2230018 is classified in G01N 33/4875 (handling of test-elements in hand-held biological analysers) and in G01N 35/00732 (automated identification).

References

Application-oriented references

Examples of places where the subject matter of this place is covered when specially adapted, used for a particular purpose, or incorporated in a larger system:

Moving cuvettes or solid samples to and from an optical analyzer	G01N 21/13
Batch operation of multiple-sample colorimeters	G01N 21/253
Automatic injection system in column chromatography	G01N 30/24
Automated fraction collectors in column chromatography	G01N 30/82
Test-element handling, dispensing and storage in hand-held analysers of biological fluids	G01N 33/4875
Analysis performed directly on the human or animal body for medical or veterinary diagnosis	A61B, A61D

Informative references

Attention is drawn to the following places, which may be of interest for search:

Sampling; preparing specimens for investigation	G01N 1/00
Flow-through optical cuvettes	G01N 21/05
Centrifugal optical cuvettes	G01N 21/07
Specific methods of analysis of biological materials	G01N 33/48
Chemical or physical processes, e.g. catalysis, colloid chemistry, or their relevant apparatus, for chemical processes in general, including automatic synthesis	B01J 19/00
Chemical or physical apparatus for general laboratory use, e.g. glassware, heating apparatus	B01L, B01L 3/00, B01L 7/00
Manipulators	B25J

Transport or storage devices, e.g. conveyors for loading or tipping	B65G
Applying closure members to bottles, jars or similar containers; Opening closed containers	B67B
Dispensing, delivering or transferring liquids	B67D
Measuring or testing processes involving enzymes or microorganisms	C12Q
Program-control systems for automatic apparatus	G05B 19/00
Control of position/force/pressure	G05D
Digital data processing	G06F

Special rules of classification

In case two or more groups of the same level are essential to the subject-matter of a document, it is classified in all these groups: for example

WO2004071660 or US2003113233 are classified in both G01N 35/1011 (control of the position or alignment of the transfer device) and G01N 35/1065 (multiple transfer devices).

An Indexing Code scheme G01N 35/00 mirrors the G01N 35/00 scheme with additional subdivisions. This G01N 35/00 scheme and more generally the G01N scheme should be used for additional information as well as more specific information to the documents classified in G01N 35/00: for example

WO2010075550 is given the code G01N 2035/00841 (more specific information added to G01N 35/00732: the results of the analysis is coded).

WO2006128098 and US4179932 are given the code G01N 35/08 (using a stream of discrete samples) in addition to the group G01N 35/1095 (supplying samples to flow-through analysers).

Synonyms and Keywords

In patent documents, the following abbreviations are often used:

LIS	Laboratory Information System
STATS	Short Turn Around Time Samples

G01N 35/10

Devices for transferring samples {or any liquids} to, in, or from, the analysis apparatus, e.g. suction devices, injection devices {(G01N 35/0099 takes precedence)}

Definition statement

This place covers:

All types of fluid-handling apparatus configured for use in automatic analysers, including both pipetters (aspirate and dispense) and dispensers (dispense from reservoir).

G01N 37/00

Details not covered by any other group of this subclass

Definition statement

This place covers:

This group is meant as a residual place in the subclass G01N, i.e. for classifying details of methods or apparatus for analysing materials not fully covered by any of the other main groups.

In addition to this, measurement methods not based on established scientific theories are also classified here (G01N 37/005).

References

Limiting references

This place does not cover:

Sampling; preparing specimens for investigation	G01N 1/00
Investigating strength properties of solid materials by application of mechanical stress	G01N 3/00
Analysing materials by weighing, e.g. weighing small particles separated from a gas or liquid	G01N 5/00
Analysing materials by measuring the pressure or volume of a gas or vapour	G01N 7/00
Investigating density or specific gravity of materials; analysing materials by determining density or specific gravity	G01N 9/00
Investigating flow properties of materials, e.g. viscosity, plasticity; analysing materials by determining flow properties	G01N 11/00
Investigating surface or boundary effects, e.g. wetting power; investigating diffusion effects; analysing materials by determining surface, boundary, or diffusion effects	G01N 13/00
Investigating characteristics of particles; investigating permeability, pore-volume, or surface-area of porous materials	G01N 15/00
Investigating resistance of materials to the weather, to corrosion, or to light	G01N 17/00
Investigating materials by mechanical methods	G01N 19/00
Investigating or analysing materials by the use of optical means, i.e. using infra-red, visible, or ultra-violet light	G01N 21/00
Investigating or analysing materials by the use of microwaves	G01N 22/00
Investigating or analysing materials by the use of other wave or particle radiation, e.g. X-rays or neutrons	G01N 23/00
Investigating or analysing materials by the use of nuclear magnetic resonance, electron paramagnetic resonance or other spin effects	G01N 24/00
Investigating or analysing materials by the use of thermal means	G01N 25/00
Investigating or analysing materials by the use of electric, electro-chemical, or magnetic means	G01N 27/00
Investigating or analysing materials by the use of ultrasonic, sonic or infrasonic waves; visualisation of the interior of objects by transmitting ultrasonic or sonic waves through the object	G01N 29/00

Investigating or analysing materials by separation into components using adsorption, absorption or similar phenomena or using ion-exchange, e.g. chromatography	G01N 30/00
Investigating or analysing non-biological materials by the use of the chemical methods specified in the subgroup	G01N 31/00
Investigating or analysing materials by specific methods not covered by the preceding groups	G01N 33/00
Automatic analysis not limited to methods or materials provided for in any single one of groups G01N 1/00 - G01N 33/00; Handling materials therefor.	G01N 35/00

G01N 37/005

{Measurement methods not based on established scientific theories}

Definition statement

This place covers:

Measurement or analysis methods not based on established scientific theories. i.e. those theories which appear to contravene known laws of physics or have no basis in accepted scientific definitions and understanding. Examples include homeopathy and the memory of water, informational life energy.