F16G

BELTS, CABLES, OR ROPES, PREDOMINANTLY USED FOR DRIVING PURPOSES; CHAINS; FITTINGS PREDOMINANTLY USED THEREFOR

Definition statement

This place covers:

Belts, e.g. V-belts, cables, ropes or chains that are specially adapted for transferring power/force from an input point to an output point to move or drive at least one mechanical part.

The belts, cables, ropes or chains being either

formed into a loop that is intended to travel around an endless path and engage two or more pulleys, sprockets or similar rotating elements and transfer power/force while travelling along its path; or

an elongated element that is intended to travel backward or forward along a path to transfer power/force between one point along its length to another point along its length, e.g. from a drum to a load.

Chains, e.g. hauling- or hoisting-chains, that are not specially adapted for transferring power/force.

Fittings and attachments primarily intended to be connected to or used with the above types of belts, cables, ropes or chains. These include:

means for fastening ends of belts together to form closed loops, e.g. fastenings for conveyor belts or V-belts;

means for fastening cables or ropes to one another or to other objects;

caps or sleeves for fixing on cables or ropes;

means for coupling chains;

components of chains, e.g. shackles, swivels, chain joints, chain links or chain bushes;

hooks as integral parts of chains.

F16G 1/00

Driving-belts (V-belts F16G 5/00; conveyor belt B65G)

Definition statement

This place covers:

Belts adapted for transferring power/force from an input point to an output point to move or drive at least one mechanical part.

Belts being either formed into a loop that is intended to travel around an endless path and engage two or more pulleys, sprockets or similar rotating elements and transfer power/force while travelling along its path; or an elongated element that is intended to travel backward or forward along a path to transfer power/force between one point along its length to another point along its length, e.g. from a drum to a load.

References

Limiting references

This place does not cover:

Producing belts of plastics	B29D 29/00

Endless conveyor belts	B65G 15/30
Making driving belts of leather	C14B 9/00
Testing of belts	G01M 13/023

Informative references

Attention is drawn to the following places, which may be of interest for search:

Woven fabrics designed to make specified articles	D03D 1/00
Gearings using endless flexible members	F16H 7/00, F16H 9/00
Belts specially adapted for gearings with variable ratio by using endless flexible members	F16H 9/24
Preventing or carrying off electrostatic charges	H05F

F16G 1/04

made of fibrous material, e.g. textiles, whether rubber-covered or not (F16G 1/28 takes precedence; making thereof D03D {; consisting of several parts F16G 1/22})

Definition statement

This place covers:

Illustrative example of subject matter classified in this group (US5429555):

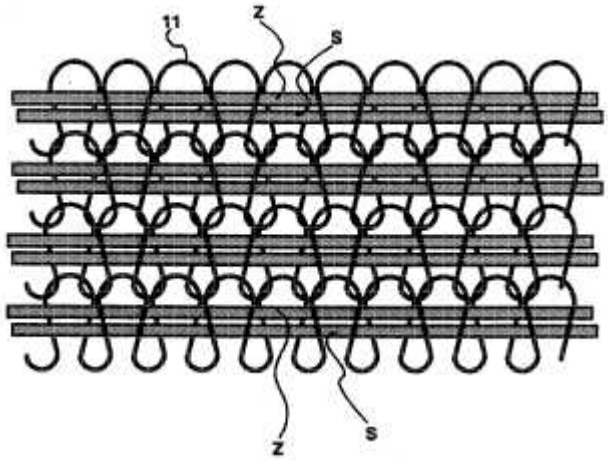

F16G 1/06

made of rubber (F16G 1/28 takes precedence; making thereof B29D 29/00 {consisting of several parts F16G 1/22})

Glossary of terms

In this place, the following terms or expressions are used with the meaning indicated:

Rubber	polymer containing dienes (see main groups C08L 7/00-C08L 21/00 and depending lower groups), e.g. HNBR, CR, acrylonitrile butadiene rubber ("NBR"), styrene-butadiene rubber ("SBR"), alkylated chlorosulfonated polyethylene ("ACSM"), epichlorohydrin, butadiene rubber ("BR"), natural rubber ("NR"), ethylene alpha olefin elastomers, ethylene propylene terpolymer or ethylene propylene diene terpolymer ("EPDM"), ethylene propylene copolymer ("EPM")

F16G 1/08

with reinforcement bonded by the rubber

Definition statement

This place covers:

Illustrative example of subject matter classified in this group (WO2010047029):

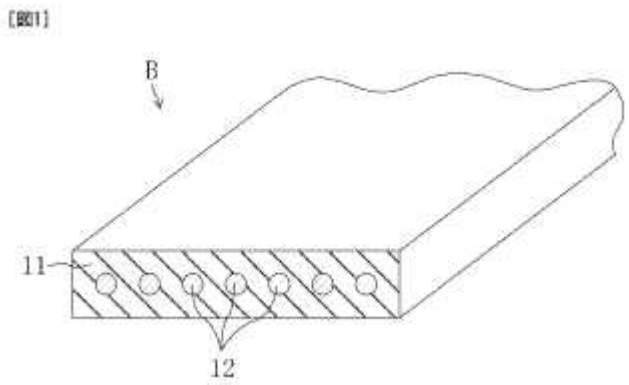

F16G 1/10

with textile reinforcement

Definition statement

This place covers:

Illustrative example of subject matter classified in this group.

For external use see layer 19 and 20 in WO2011003090:

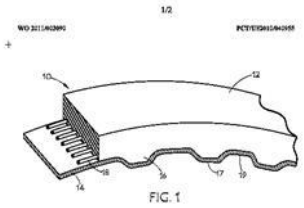

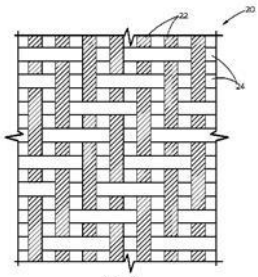

or internally see inserts 20 of US3911755:

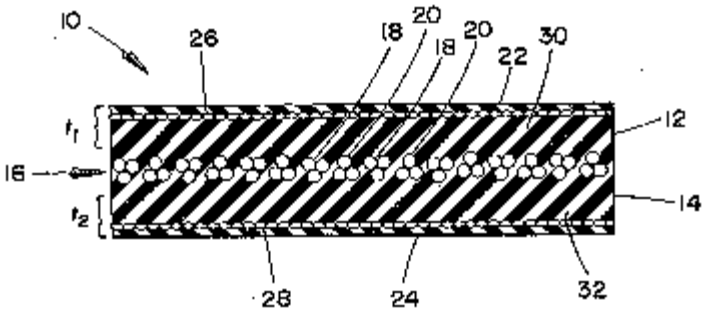

FIG. 3

F16G 1/12

with metal reinforcement

Definition statement

This place covers:

Illustrative example of subject matter classified in this group (GB2026940: metal reinforced belt):

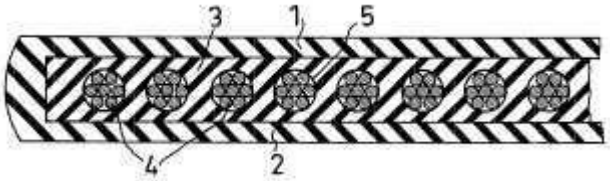

F16G 1/14

made of plastics (F16G 1/28 takes precedence; making thereof B29D 29/00 {consisting of several parts F16G 1/22})

Definition statement

This place covers:

Illustrative example of subject matter classified in this group (WO2007054065: made of thermoplastic):

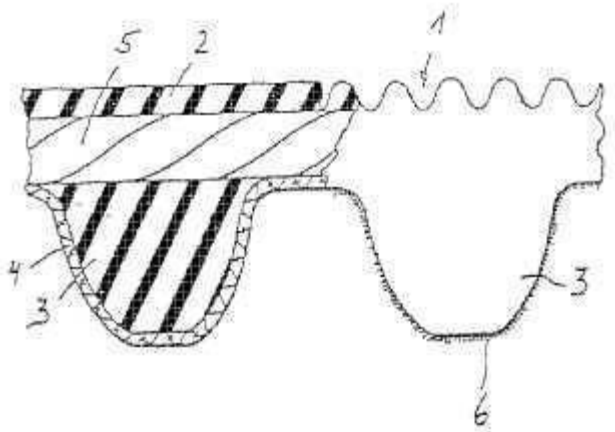

Example of common plastics are:

Polyester (PES),Polyethylene terephthalate (PET),Polyethylene (PE),High-density polyethylene (HDPE), Polyvinyl chloride (PVC),Polyvinylidene chloride (PVDC),Low-density polyethylene (LDPE),Polypropylene (PP), Polystyrene (PS),High impact polystyrene (HIPS),Polyamides (PA) (Nylons), Acrylonitrile butadiene styrene (ABS), Polycarbonate (PC), Polycarbonate/Acrylonitrile Butadiene Styrene (PC/ABS), Polyurethanes (PU).

F16G 1/18

made of wire (making thereof B21F 43/00 {; consisting of several parts F16G 1/22})

Definition statement

This place covers:

Illustrative example of subject matter classified in this group (GB551595):

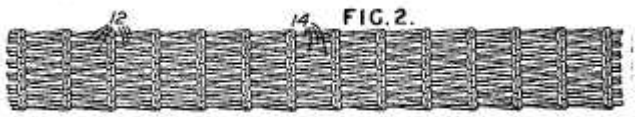

F16G 1/20

made of a single metal strip (making thereof B21D 53/14)

Definition statement

This place covers:

Illustrative example of subject matter classified in this group (EP0428280):

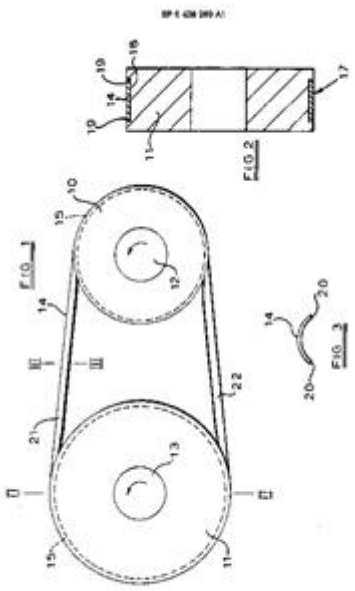

References

Informative references

Attention is drawn to the following places, which may be of interest for search:

Making of metallic belts or rings	B21D 53/14, B21D 53/16
Manufacturing of metal belts	B23K 26/00

F16G 1/21

built-up from superimposed layers, e.g. zig-zag folded

Definition statement

This place covers:

Illustrative example of subject matter classified in this group (US2004219850):

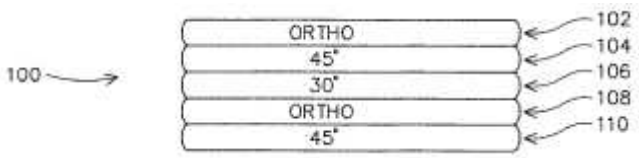

F16G 1/22

consisting of several parts

Definition statement

This place covers:

Illustrative example of subject matter classified in this group (EP2116487):

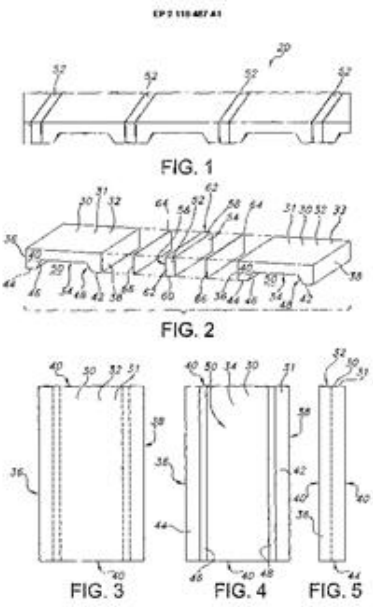

F16G 1/28

with a contact surface of special shape, e.g. toothed

Definition statement

This place covers:

Illustrative example of subject matter classified in this group (US2010120566):

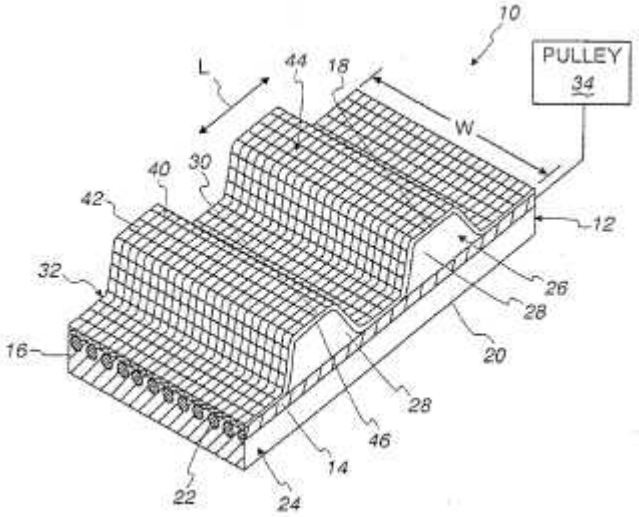

F16G 3/00

Belt fastenings, e.g. for conveyor belts (for V-belts F16G 7/00)

Definition statement

This place covers:

Fittings and attachments primarily intended to be connected to or used with the above types of belts. These include: means for fastening ends of belts together to form closed loops, e.g. fastenings for conveyor belts

F16G 3/003

{Apparatus or tools for joining belts (stapler B25C 5/00)}

Definition statement

This place covers:

Apparatus to insert rivet. Illustrative example (WO2009106013):

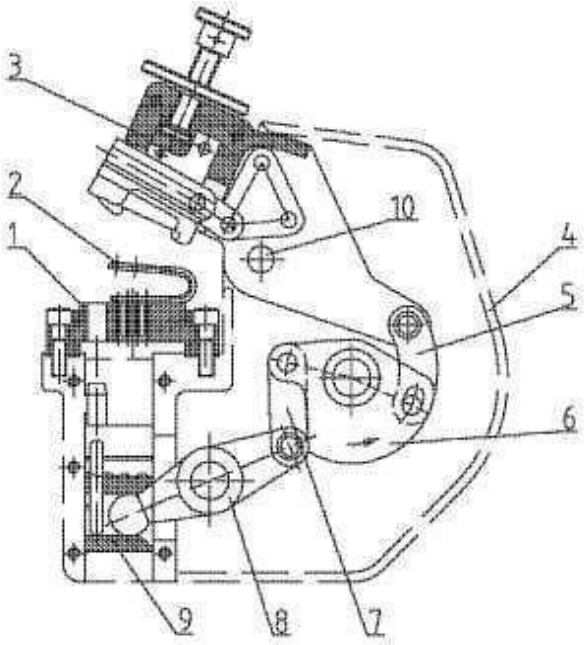

图 1 / Fig. 1

Apparatus to insert staples. Illustrative example (EP2101080):

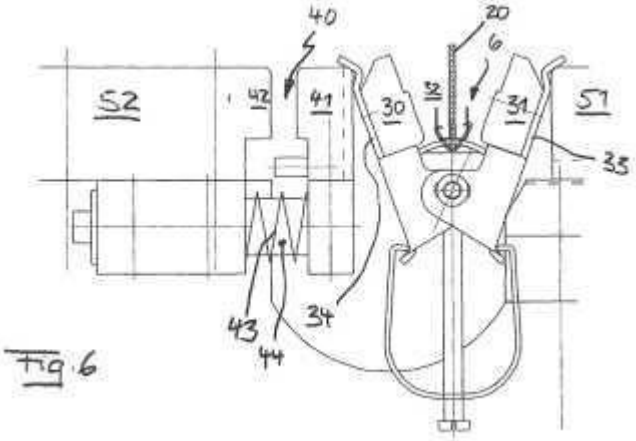

Same subject-matter as F16G 3/16

F16G 3/006

{Traction devices to bring together belts, cables or chains}

Definition statement

This place covers:

Illustrative examples of subject matter classified in this group.

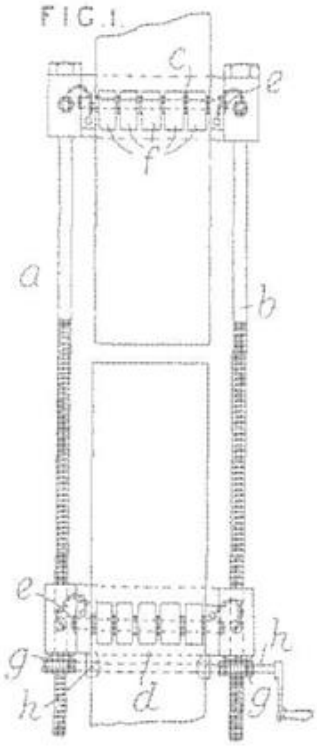

GB191127337

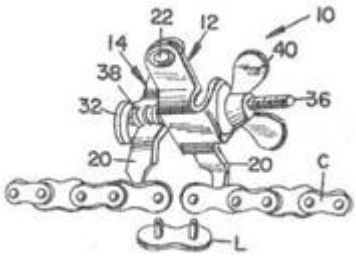

US3999738

F16G 3/02

with series of eyes or the like, interposed and linked by a pin to form a hinge (F16G 3/09 takes precedence)

Definition statement

This place covers:

Illustrative example of subject matter classified in this group (EP1967758):

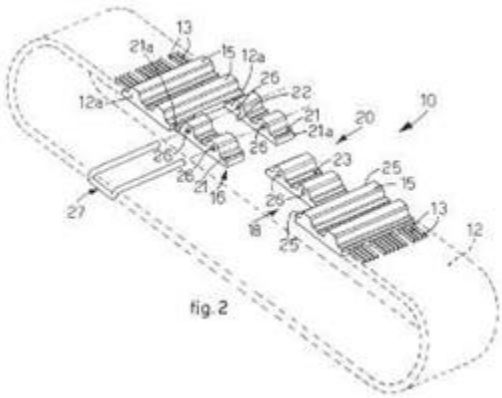

F16G 3/04

in which the ends of separate U-shaped or like eyes are attached to the belt by parts penetrating into it

Definition statement

This place covers:

Illustrative example of subject matter classified in this group (US5048675):

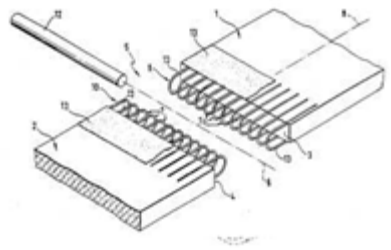

F16G 3/06

with outwardly-bent, mutually-connected belt ends

Definition statement

This place covers:

Illustrative example of subject matter classified in this group (US2008200295):

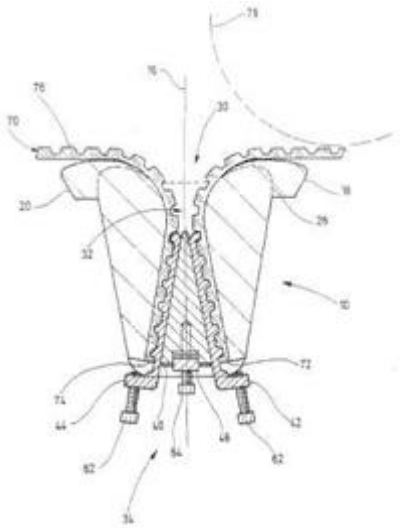

F16G 3/08

consisting of plates and screw-bolts or rivets (F16G 3/06 takes precedence)

Definition statement

This place covers:

Illustrative example of subject matter classified in this group (FR2803836):

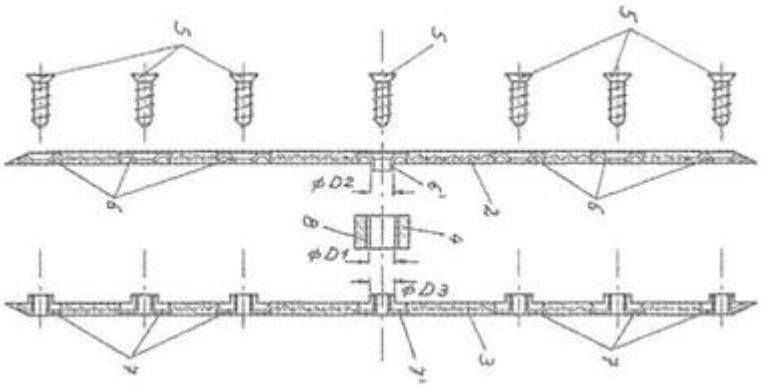

F16G 3/10

Joining belts by sewing, sticking, vulcanising, or the like; Constructional adaptations of the belt ends for this purpose

Definition statement

This place covers:

Sewing. Illustrative example (WO2005095248):

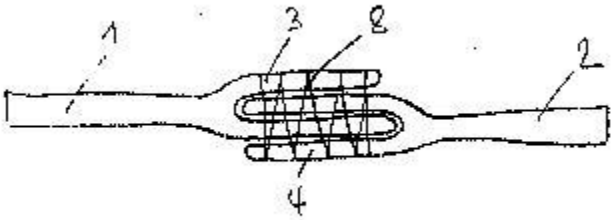

Fig. 5

Gluing. Illustrative example (DE102008019540):

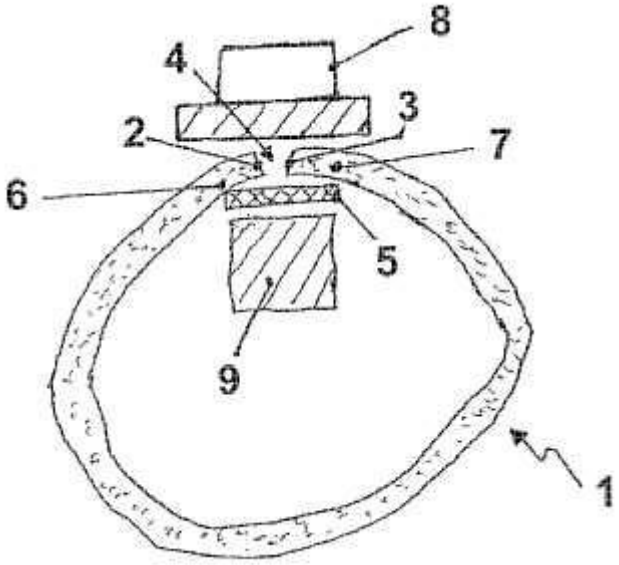

Vulcanising/interlocking Illustrative example (US2002157786):

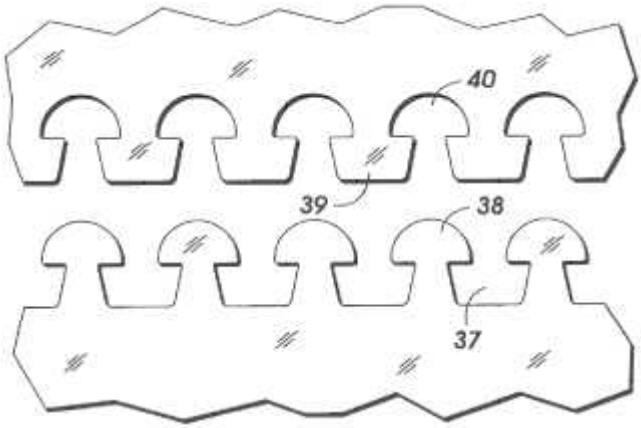

References

Informative references

Attention is drawn to the following places, which may be of interest for search:

Joining of plastics	B29C 65/00

F16G 3/12

Joining belts by lacing

Definition statement

This place covers:

Illustrative example of subject matter classified in this group (DE4010795):

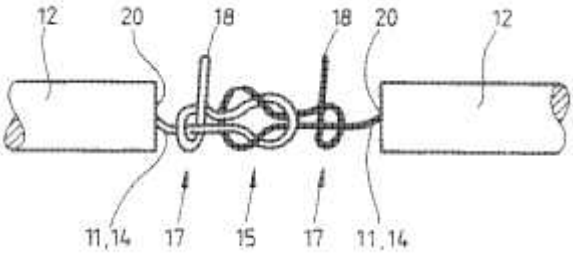

F16G 3/14

with extensible parts; with resilient parts

Definition statement

This place covers:

Illustrative example of subject matter classified in this group (US2010025200):

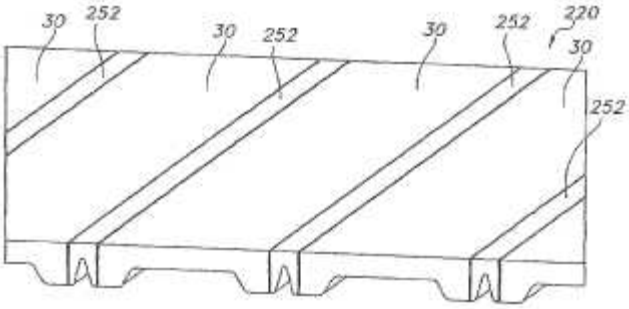

F16G 3/16

Devices or machines for connecting driving-belts or the like

Definition statement

This place covers:

Apparatus to insert rivet. Illustrative example (WO2009106013):

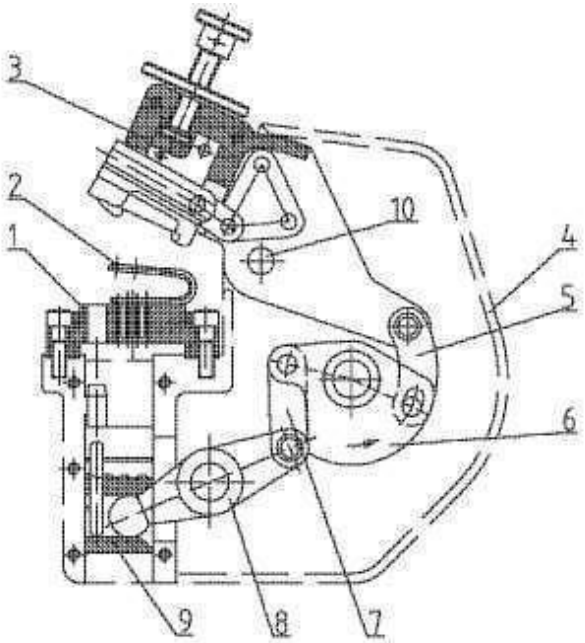

图 1 / Fig. 1

Apparatus to insert staples. Illustrative example (EP2101080):

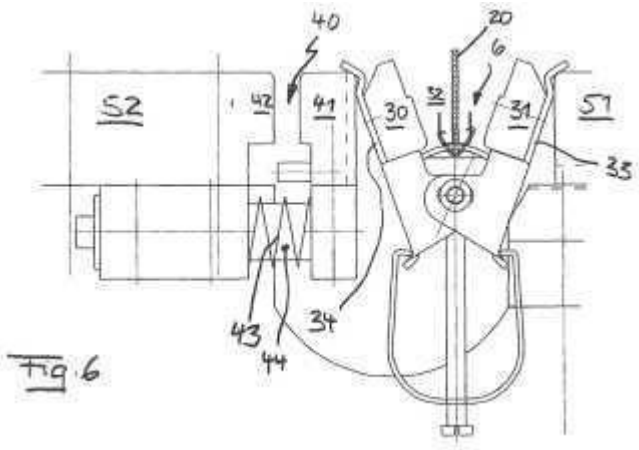

Same subject-matter as F16G 3/003

F16G 5/00

V-belts, i.e. belts of tapered cross-section

Definition statement

This place covers:

V-Belts adapted for transferring power/force from an input point to an output point to move or drive at least one mechanical part.

V-Belts being either formed into a loop that is intended to travel around an endless path and engage two or more pulleys, sprockets or similar rotating elements and transfer power/force while travelling along its path; or an elongated element that is intended to travel backward or forward along a path to transfer power/force between one point along its length to another point along its length, e.g. from a drum to a load.

Example (US 4534750):

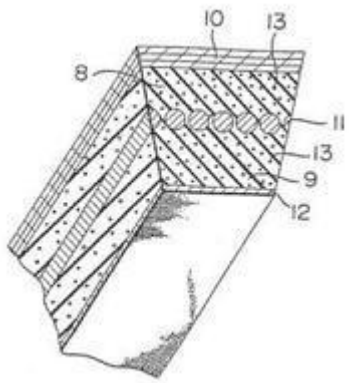

References

Limiting references

This place does not cover:

Testing of belts	G01M 13/023

F16G 5/04

made of rubber (F16G 5/02 takes precedence {consisting of several parts F16G 5/16})

Definition statement

This place covers:

Illustrative example of subject matter classified in this group (EP1894693):

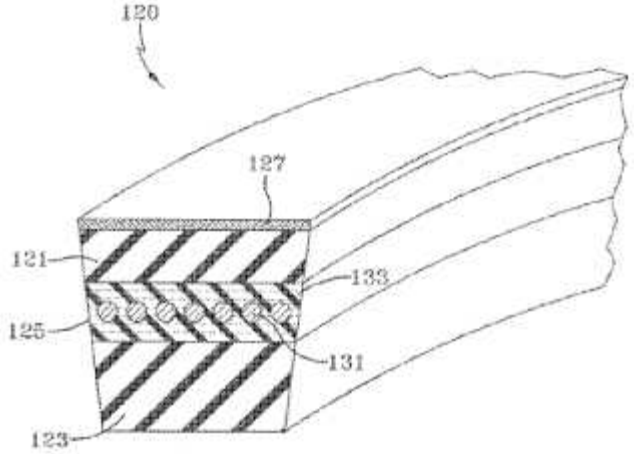

FIG−1

Glossary of terms

In this place, the following terms or expressions are used with the meaning indicated:

Elastomer or Rubber	polymer containing dienes (see main groups C08L 7/00-C08L 21/00 and depending lower groups), e.g. HNBR, CR, acrylonitrile butadiene rubber ("NBR"), styrene-butadiene rubber ("SBR"), alkylated chlorosulfonated polyethylene ("ACSM"), epichlorohydrin, butadiene rubber ("BR"), natural rubber ("NR"), ethylene alpha olefin elastomers, ethylene propylene terpolymer or ethylene propylene diene terpolymer ("EPDM"), ethylene propylene copolymer ("EPM").

F16G 5/06

with reinforcement bonded by the rubber

Definition statement

This place covers:

reinforcement both internally and externally. Illustrative example (see respectively 26 and 24 in EP1739124):

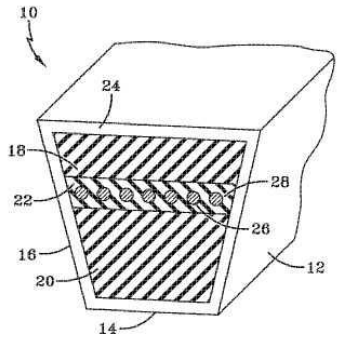

FIG−1

F16G 5/12

made of plastics (F16G 5/20 takes precedence {consisting of several parts F16G 5/16})

Definition statement

This place covers:

Example of common plastics are:

Polyester (PES),Polyethylene terephthalate (PET),Polyethylene (PE),High-density polyethylene (HDPE), Polyvinyl chloride (PVC),Polyvinylidene chloride (PVDC),Low-density polyethylene (LDPE),Polypropylene (PP), Polystyrene (PS),High impact polystyrene (HIPS),Polyamides (PA) (Nylons), Acrylonitrile butadiene styrene (ABS), Polycarbonate (PC), Polycarbonate/Acrylonitrile Butadiene Styrene (PC/ABS), Polyurethanes (PU).

F16G 5/16

consisting of several parts

Definition statement

This place covers:

Illustrative example of subject matter classified in this group (US2010144474):

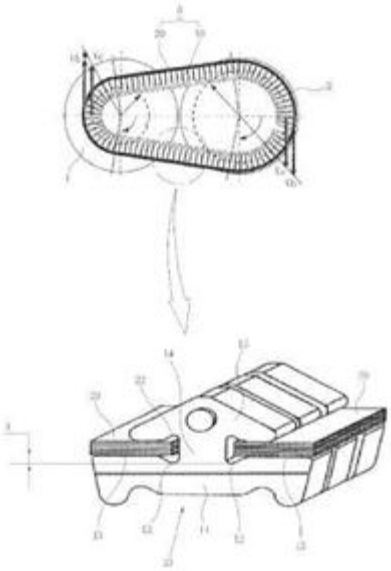

and WO2010061564:

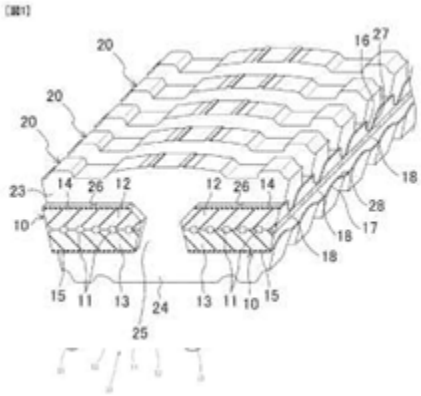

References

Informative references

Attention is drawn to the following places, which may be of interest for search:

Shapping by press cutting	B21D 28/00
Making of metallic belts or rings	B21D 53/14, B21D 53/16
Manufacturing of metal belts	B23K 26/00
Heat treatments for chains or chain links	C21D 9/0087

F16G 5/18

in the form of links

Definition statement

This place covers:

Illustrative example of subject matter classified in this group (EP1748221):

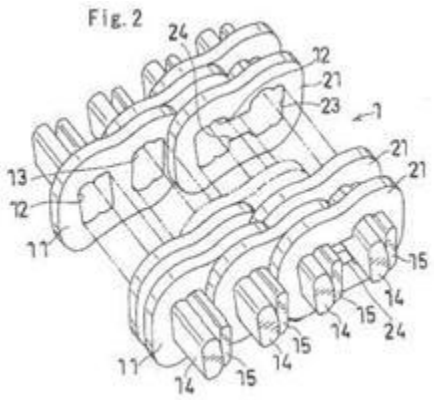

Although this belt looks like a chain, it is considered and classified as being a V-Belt because of the interaction of the chain with the pulley. The engagement of the pins with the pulley is made on the extrimity of the pins and is similar with the side contact engagement that a V-Belt has with a pulley.

F16G 5/20

with a contact surface of special shape, e.g. toothed

Definition statement

This place covers:

Illustrative example of subject matter classified in this group (multiribbed: WO2010047051):

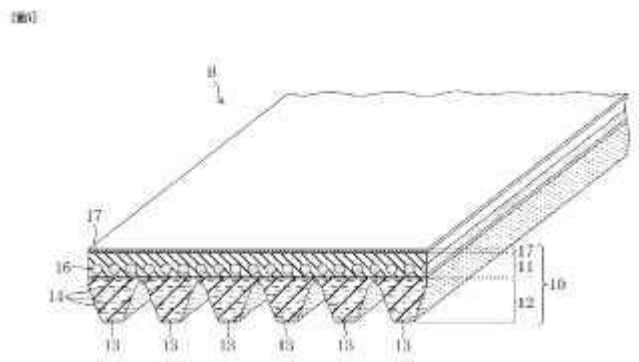

F16G 5/22

built-up from superimposed layers

Definition statement

This place covers:

Illustrative example of subject matter classified in this group (JP61171939):

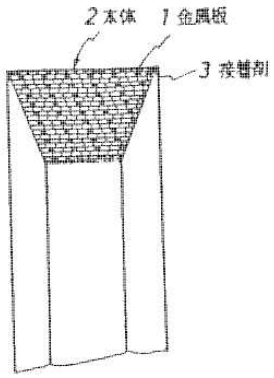

F16G 7/00

V-belt fastenings

Definition statement

This place covers:

Fittings and attachments primarily intended to be connected to or used with the above types of V-belts. These include: means for fastening ends of belts together to form closed loops, e.g. fastenings for V-belts

References

Informative references

Attention is drawn to the following places, which may be of interest for search:

Producing belts of plastics	B29D 29/00

F16G 7/02

locked, e.g. riveted

Definition statement

This place covers:

Illustrative example of subject matter classified in this group (US4376668):

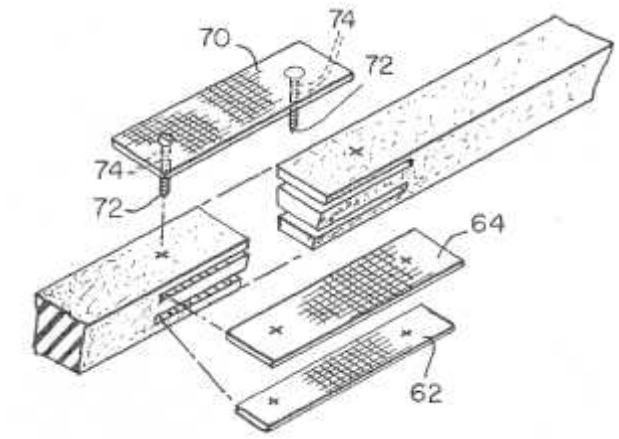

F16G 7/04

quickly detachable

Definition statement

This place covers:

Illustrative example of subject matter classified in this group (US4861322):

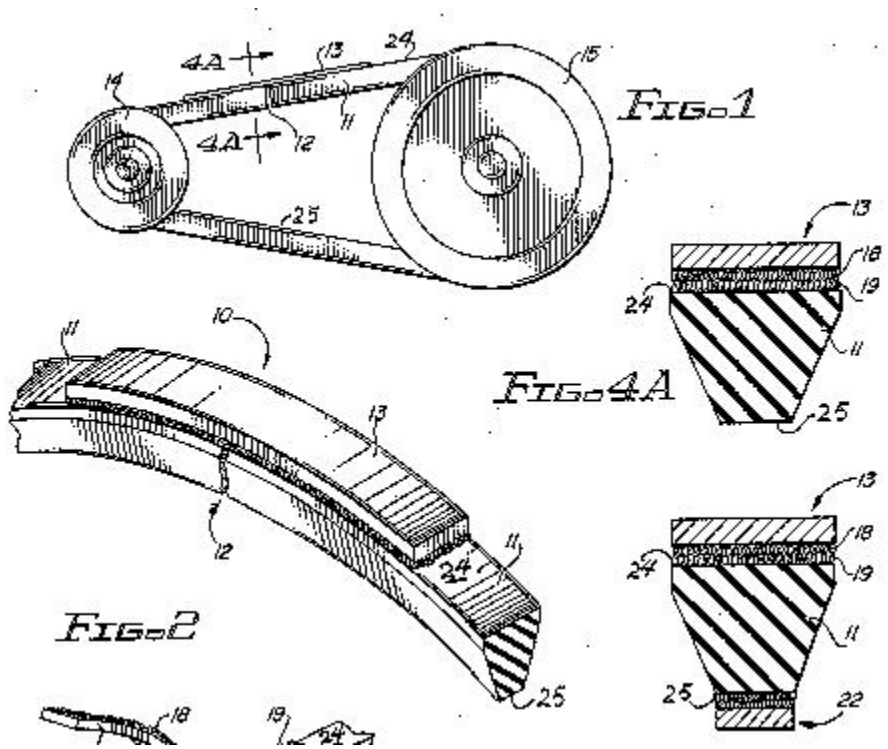

F16G 7/06

adjustable, e.g. for tension

Definition statement

This place covers:

Illustrative example of subject matter classified in this group (US4781666):

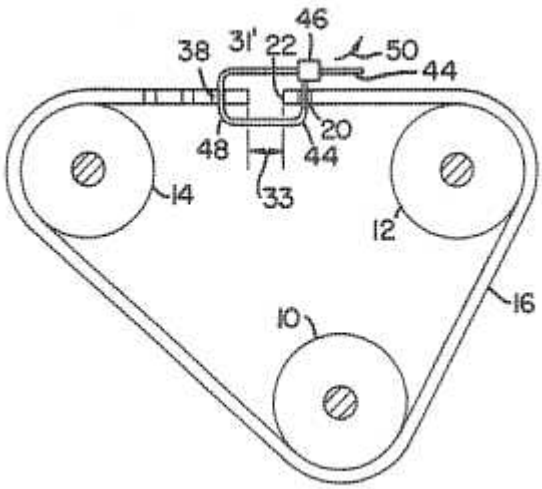

F16G 9/00

Ropes or cables specially adapted for driving, or for being driven by, pulleys or other gearing elements (ropes or cables in general D07B)

Definition statement

This place covers:

Ropes or cables adapted for transferring power/force from an input point to an output point to move or drive at least one mechanical part.

Ropes or cables being either formed into a loop that is intended to travel around an endless path and engage two or more pulleys, sprockets or similar rotating elements and transfer power/force while travelling along its path; or an elongated element that is intended to travel backward or forward along a path to transfer power/force between one point along its length to another point along its length, e.g. from a drum to a load.

Example (WO2010094326):

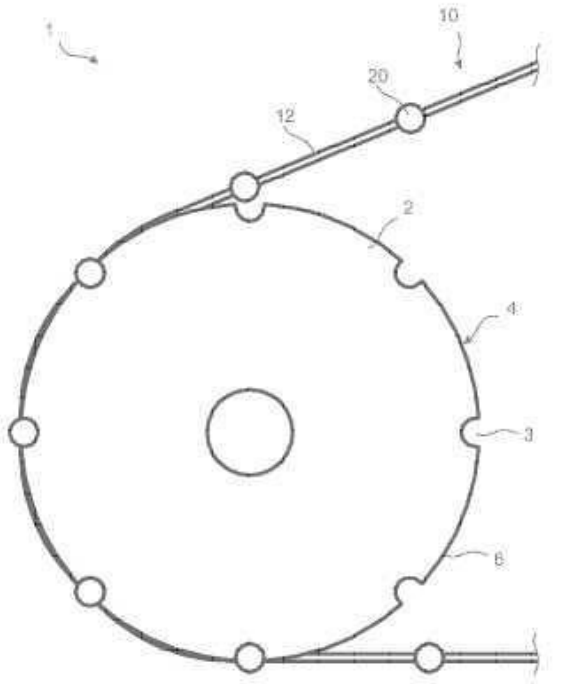

Figur 1

References

Informative references

Attention is drawn to the following places, which may be of interest for search:

Arrangements of ropes or cables for elevators	B66B 7/06
Slings comprising chains, wires, ropes, bands	B66C 1/12
Ropes or cables in general	D07B
Transmissions with cables, ropes	F16H 19/003

F16G 11/00

Means for fastening cables or ropes to one another or to other objects; Caps or sleeves for fixing on cables or ropes (attaching ropes or cables to lift cars or cages B66B 7/08, to winch drums or barrels B66D 1/34; ground anchors E02D 5/00; anchoring devices for prestressed members E04C 5/00; rope clamps in earth drilling E21B 19/12)

Definition statement

This place covers:

Fittings and attachments primarily intended to be connected to or used with cables or ropes.

Different sorts of assembly not covered by the subgroups.

Example (EP2297419):

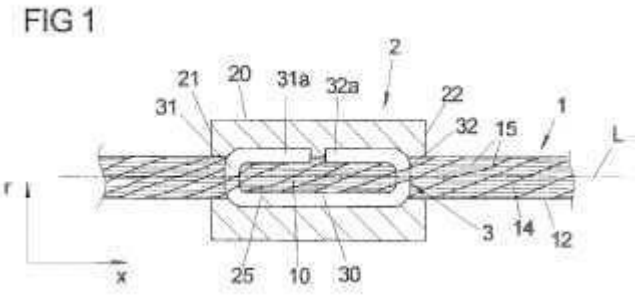

Magnets (US2011108217):

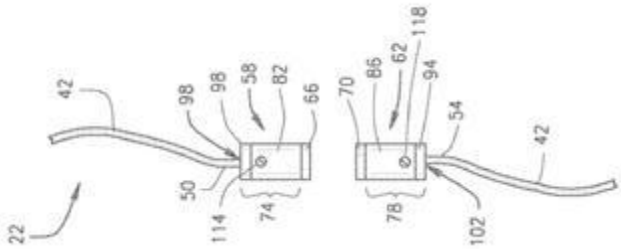

Thimble (WO2009059445):

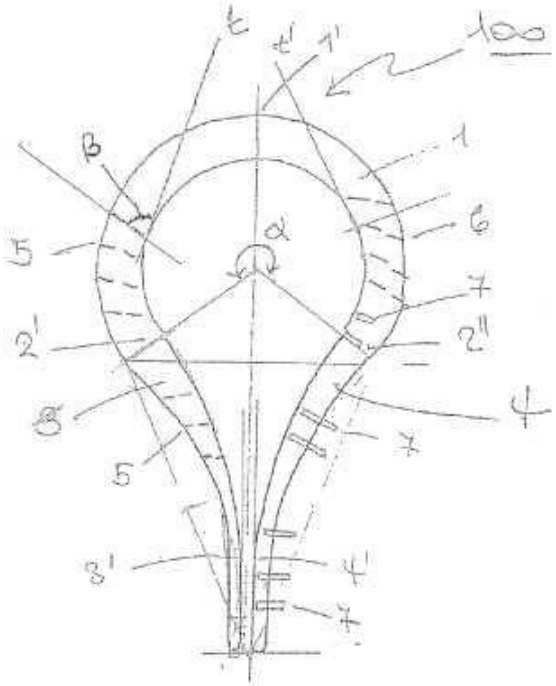

Fig. 1

References

Informative references

Attention is drawn to the following places, which may be of interest for search:

Safety window cleaning	A47L 3/04

Safety belts or harnesses in general	A62B 35/00, B63B 21/08
Rope safety clamp devices	A62B 35/04, A62B 1/14
Safety mountainering	A63B 29/02
Straining wire in general	B21F 9/00
Securing of loads	B60P 7/06
Fastening equipment for ropes on ships	B63B 21/04
Adaptations of ropes or the like on ships	B63B 21/20
Arrangements for ropes or cables for connection to elevator cars or cages	B66B 7/08
Attachment of ropes or cables to drums or barrels of winding mechanisms	B66D 1/34
Harness for animal	B68B
Making nets	D04G 1/00
Ropes or cables in general	D07B
Cable clamps for suspension bridge cables	E01D 19/16
Ground anchors	E02D 5/80
Anchoring devices for prestressed members	E04C 5/00
Safety in buildings	E04G 21/32
Rope clamps in earth drilling	E21B 19/12

F16G 11/02

with parts deformable to grip the cable or cables; Fastening means which engage a sleeve or the like fixed on the cable

Definition statement

This place covers:

Illustrative example of subject matter classified in this group (US4939831):

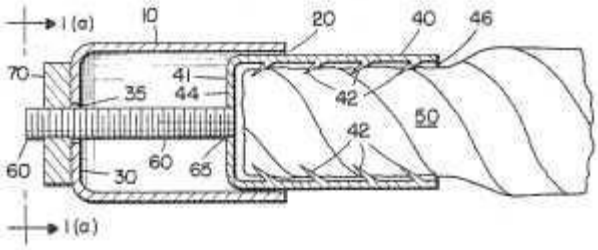

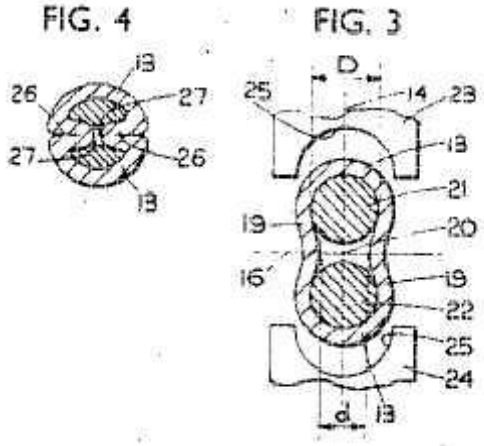

Crimping of sleeves (GB1254277):

F16G 11/03

incorporating resiliently-mounted members for attachment of the cable end

Definition statement

This place covers:

Illustrative example of subject matter classified in this group (DE102009015290):

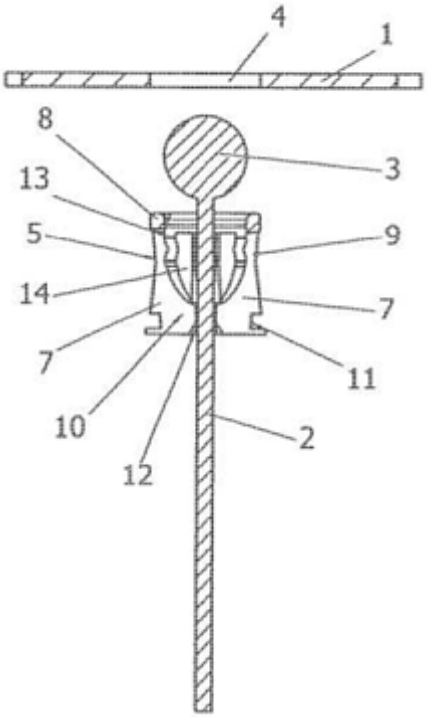

F16G 11/04

with wedging action, e.g. friction clamps (F16G 11/02, {F16G 11/10} take precedence; {eyes for grommet-thimble type fastenings F16G 11/146})

Definition statement

This place covers:

Illustrative examples of subject matter classified in this group (EP2297471):

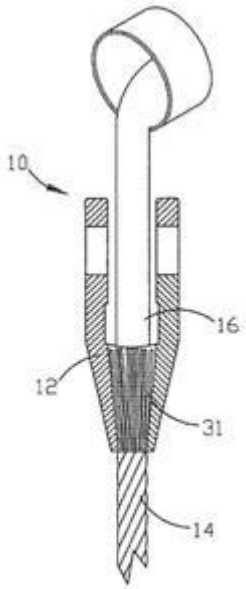

A-A
FIG. 2

and (FR2951795):

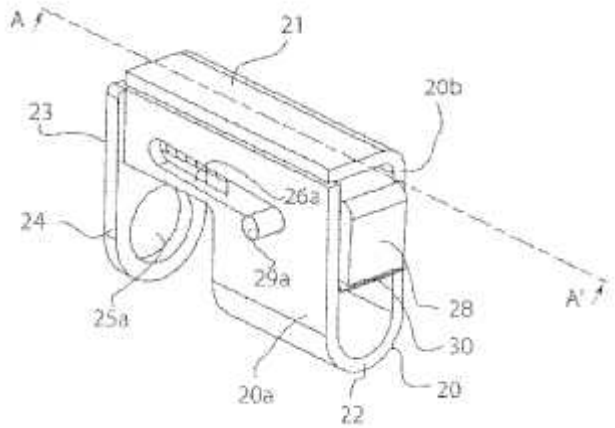

F16G 11/05

by using conical plugs insertable between the strands

Definition statement

This place covers:

Illustrative example of subject matter classified in this group (GB2313852):

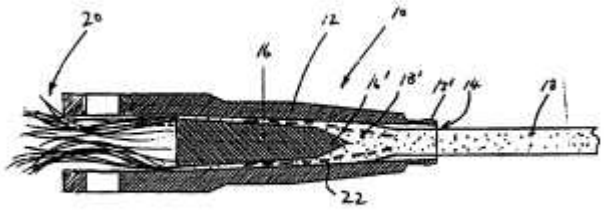

FIG 2

F16G 11/06

with laterally-arranged screws (F16G 11/02, F16G 11/04 take precedence)

Definition statement

This place covers:

Illustrative example of subject matter classified in this group (US7624479):

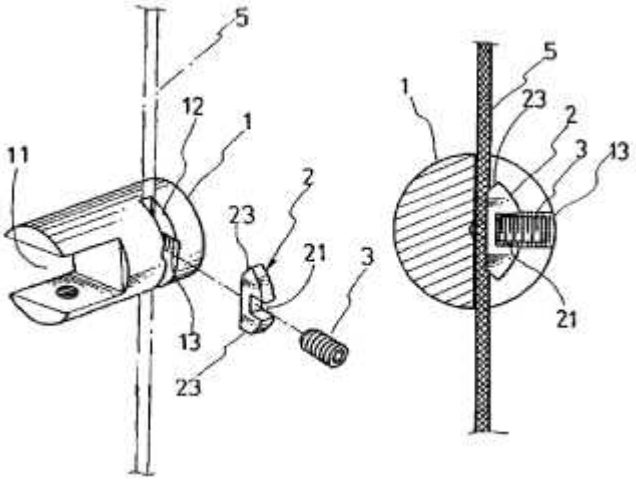

F16G 11/08

Fastenings for securing ends of driving-cables to one another, the fastenings having approximately the same diameter as the cables

Definition statement

This place covers:

Illustrative example of subject matter classified in this group (US4678360):

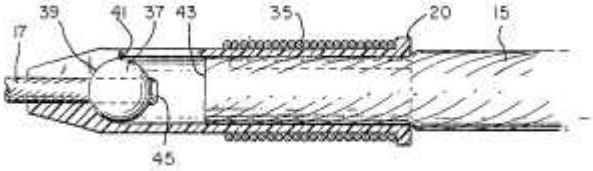

F16G 11/09

incorporating hinge joints or pivots for the attachment of the cable ends

Definition statement

This place covers:

Illustrative example of subject matter classified in this group (GB191007934):

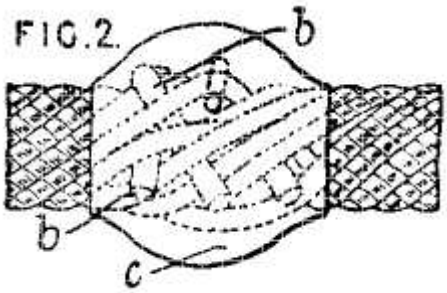

F16G 11/10

Quick-acting fastenings; Clamps holding in one direction only

Definition statement

This place covers:

Illustrative examples of subject matter classified in this group (WO2009112806):

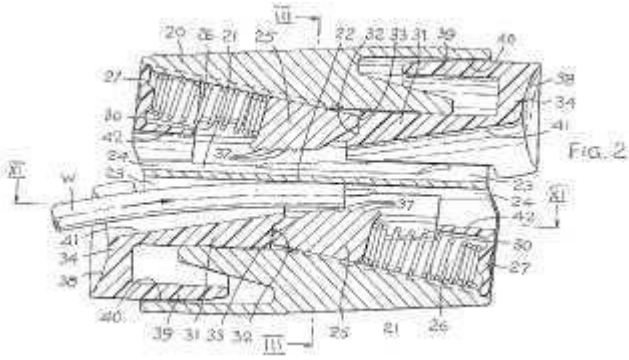

(US2009064473):

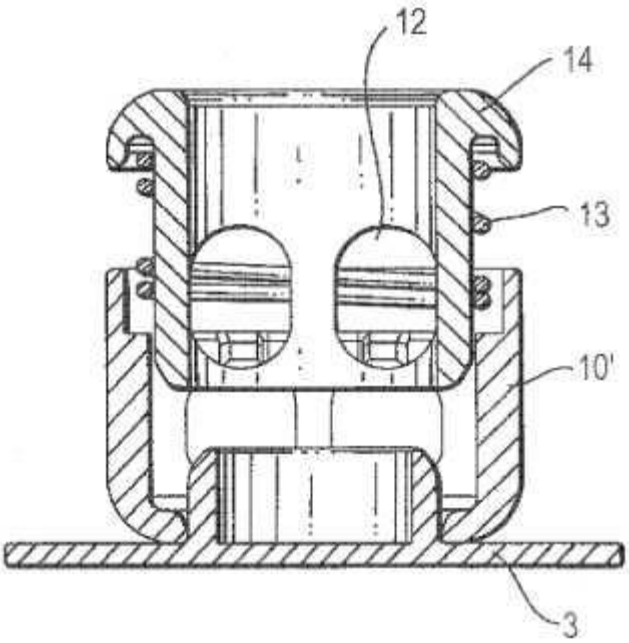

(WO2006105866):

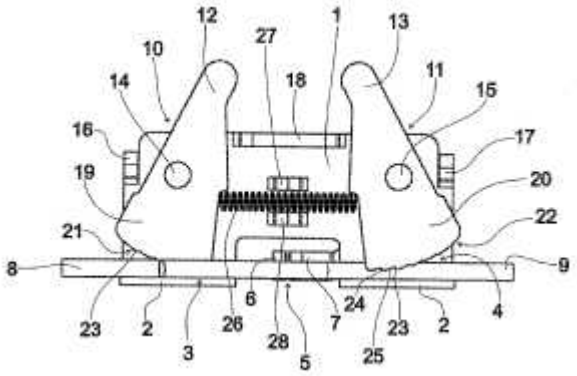

References

Informative references

Attention is drawn to the following places, which may be of interest for search:

Holding devices for laces	A43C 7/00, A43C 1/06
Clamps for straps like e.g. for safety belts	A44B 11/06
Safety window cleaning	A47L 3/04
Rope safety clamp devices	A62B 35/04, A62B 1/14
Safety mountainering	A63B 29/02
Rope cleat	B63B 21/08
Safety in buildings	E04G 21/32

F16G 11/12

Connections or attachments, e.g. turnbuckles, adapted for straining of cables, ropes, or wire (straining wire in general B21F 9/00)

Definition statement

This place covers:

Illustrative examples of subject matter classified in this group (US2010275417):

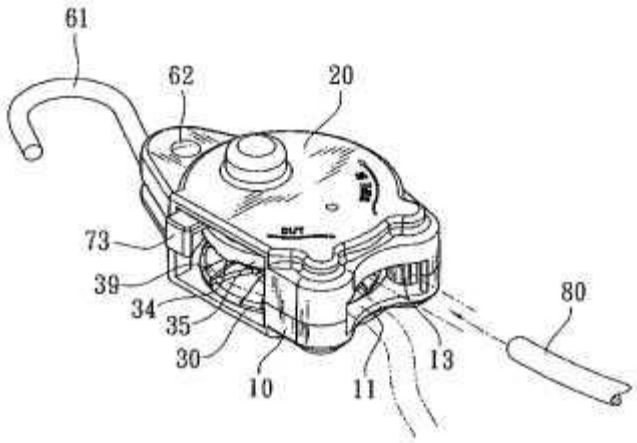

and (US7451962):

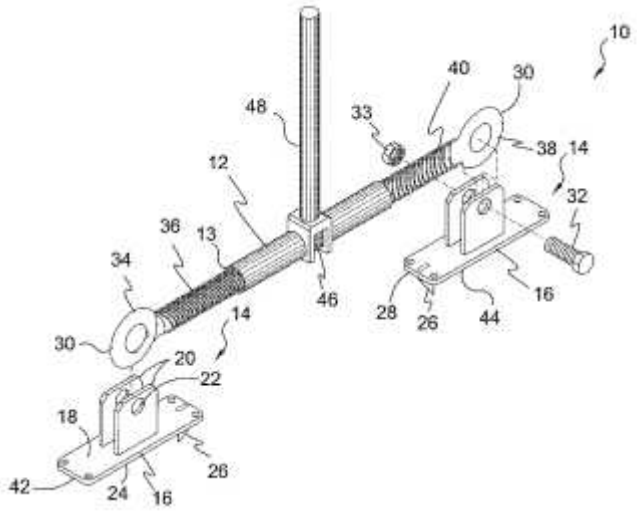

References

Informative references

Attention is drawn to the following places, which may be of interest for search:

Clamps for straps like e.g. for safety belts	A44B 11/06
Fastening/connecting/tensioning	B25B 25/00
Securing of loads	B60P 7/06
Tighteners	B60P 7/0823
Bundling using buckles	B65D 63/16

Special rules of classification

This group applies only for cables ropes or wires and not for belts

F16G 11/14

Devices or coupling-pieces designed for easy formation of adjustable loops, e.g. choker hooks; Hooks or eyes with integral parts designed to facilitate quick attachment to cables or ropes at any point, e.g. by forming loops (crane hooks B66C 1/34; hooks or eyes in general F16B 45/00)

Definition statement

This place covers:

Illustrative examples of subject matter classified in this group (EP2101080):

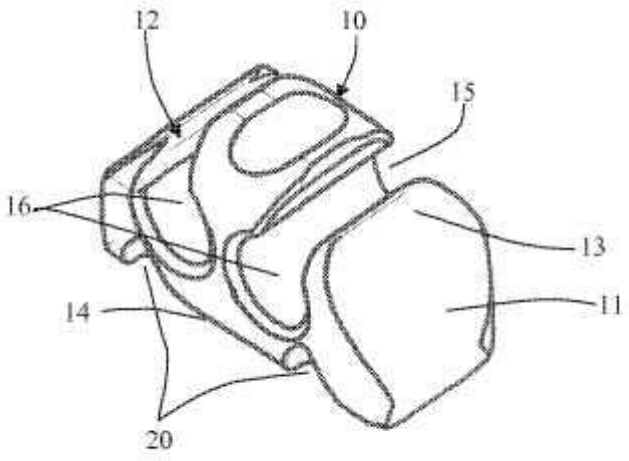

FIG. 7

and (US5950284):

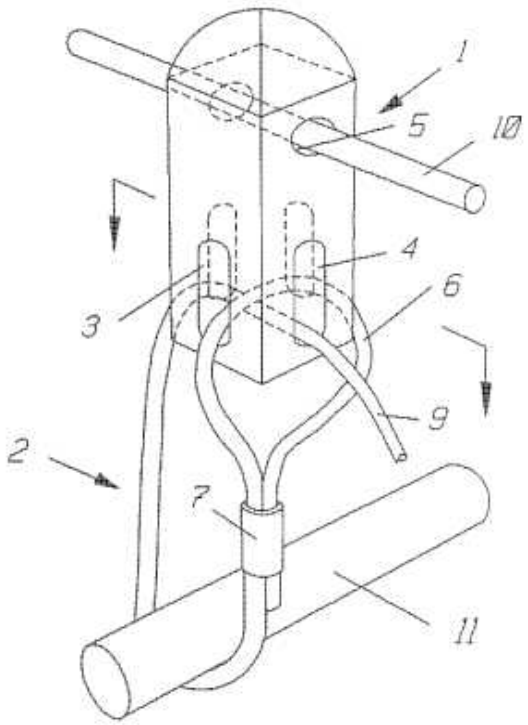

References

Informative references

Attention is drawn to the following places, which may be of interest for search:

Safety belts or harnesses in general	A62B 35/00
Safety mountainering	A63B 29/02
Fastening of Ropes	B63B 21/04
Chokers	B66C 1/14

F16G 13/00

Chains (making thereof B21L)

References

Limiting references

This place does not cover:

Methods or apparatus for making or permanently assembling chains or chain elements	B21L, B22D 25/02, B29C
Gearings using endless flexible members	F16H 7/00, F16H 9/00
Chains specially adapted for gearings with variable ratio by using endless flexible members	F16H 9/24

Informative references

Attention is drawn to the following places, which may be of interest for search:

Making of chains by mechanical metal-working without essentially removing material or by punching metal	B21L
Making of chains by casting	B22D 25/02
Making of chains by shaping or joining of plastics or by shaping of substances in a plastic state, in general	B29C, B29L 2031/12
Traction chains for conveyors	B65G 17/38, B65G 19/20
Heat treatments for chains or chain links	C21D 9/0087

F16G 13/02

Driving-chains (specially adapted to gearings with variable gear-ratio F16H 9/00)

Definition statement

This place covers:

Illustrative example of subject matter classified in this group (EP2258653):

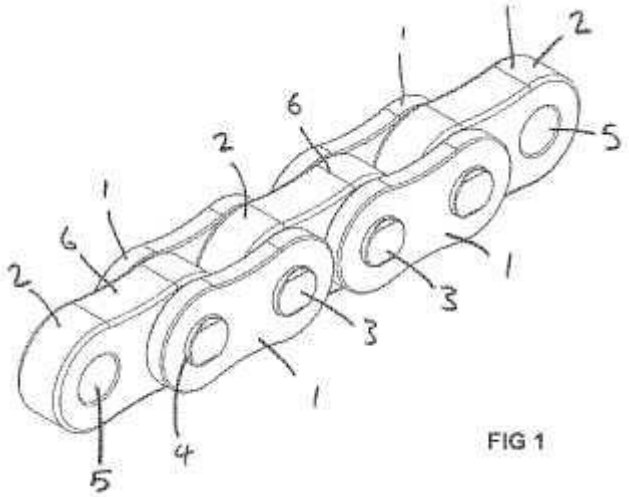

FIG 1

F16G 13/04

Toothed chains

Definition statement

This place covers:

Illustrative example of subject matter classified in this group (WO2010030669):

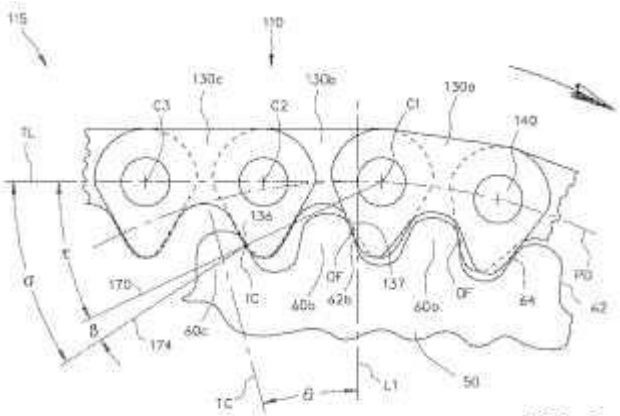

FIG. 6

F16G 13/06

with links connected by parallel driving-pins with or without rollers {so called open links (if the parallel coupling pins have only a joining function - so called closed links - F16G 13/02)}

Definition statement

This place covers:

Illustrative example of subject matter classified in this group (DE102008062935):

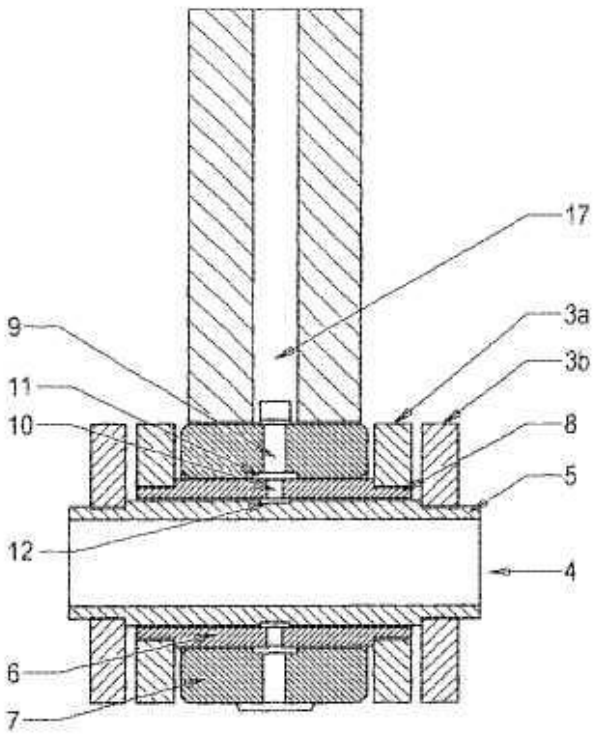

F16G 13/07

the links being of identical shape, e.g. cranked

Definition statement

This place covers:

Illustrative example of subject matter classified in this group (US 4553791):

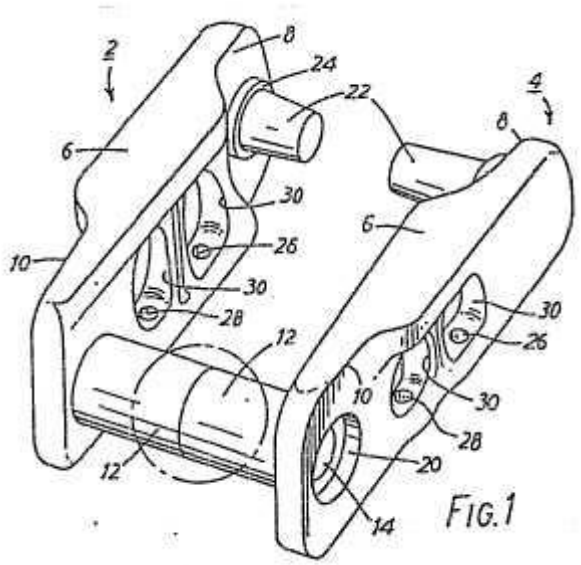

F16G 13/08

with links closely interposed on the joint pins (F16G 13/04 takes precedence)

Definition statement

This place covers:

Illustrative example of subject matter classified in this group (US2010069188):

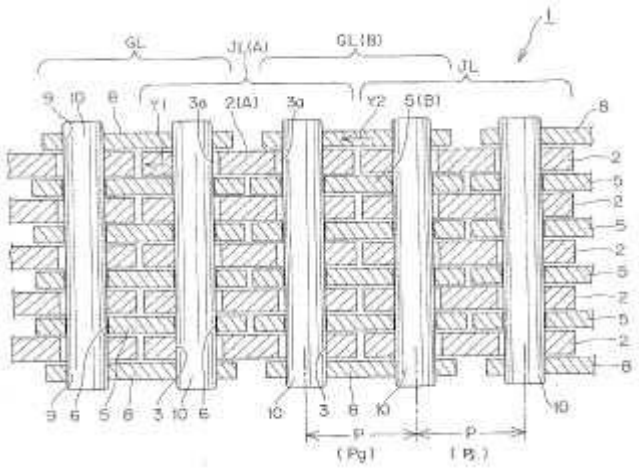

F16G 13/10

with universal joints

Definition statement

This place covers:

Illustrative examples of subject matter classified in this group (EP1235000):

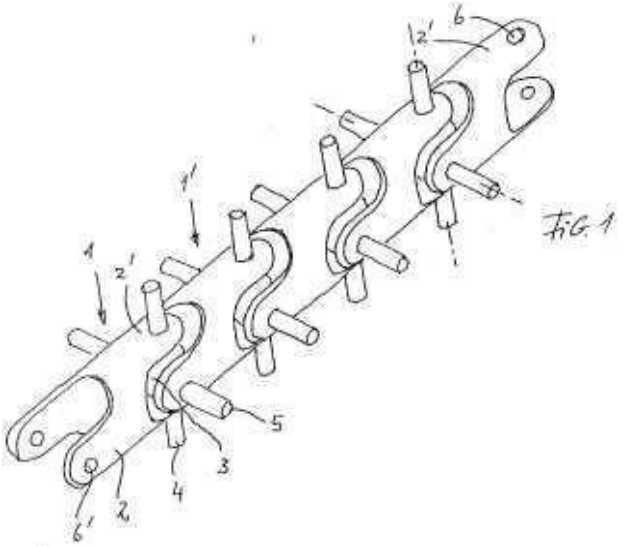

and (WO03091599):

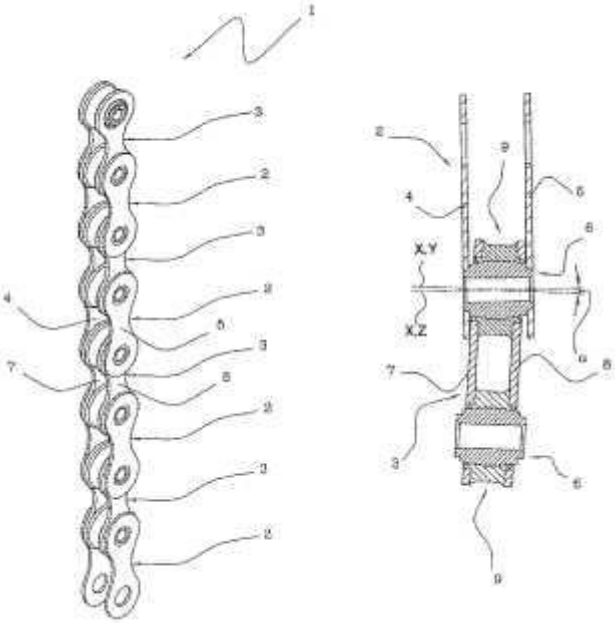

F16G 13/12

Hauling- or hoisting-chains {so called ornamental chains}

Definition statement

This place covers:

Illustrative examples of subject matter classified in this group (WO2007009517):

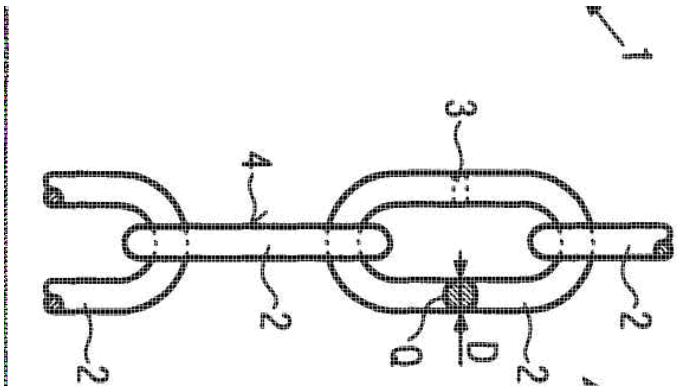

F16G 13/16

with arrangements for holding electric cables, hoses, or the like

Definition statement

This place covers:

Illustrative example of subject matter classified in this group (US2008120958):

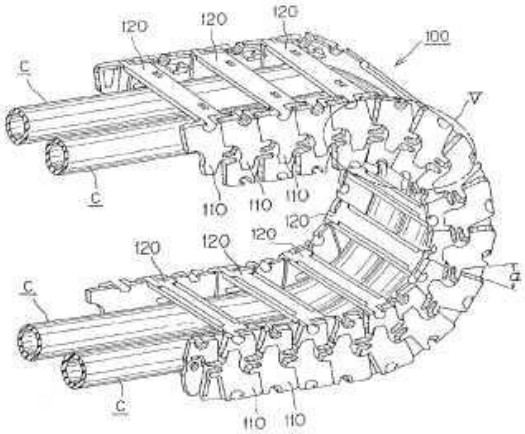

References

Informative references

Attention is drawn to the following places, which may be of interest for search:

Protective arrangements for electric wires in vehicles	B60R 16/0215
Means for guiding or supporting belts	F16H 7/18
Protective tubings or conduits for electric cables made of articulated units	H02G 3/0475
Arrangements of electric cables using an extensible carrier	H02G 11/006

F16G 13/18

Chains having special overall characteristics

Definition statement

This place covers:

Push pull chains. Illustrative examples (US2010223901):

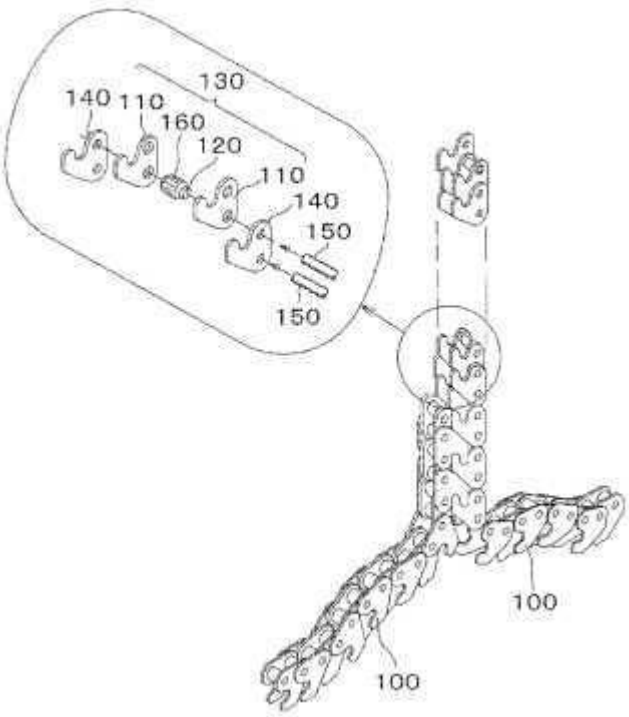

and (EP2146033):

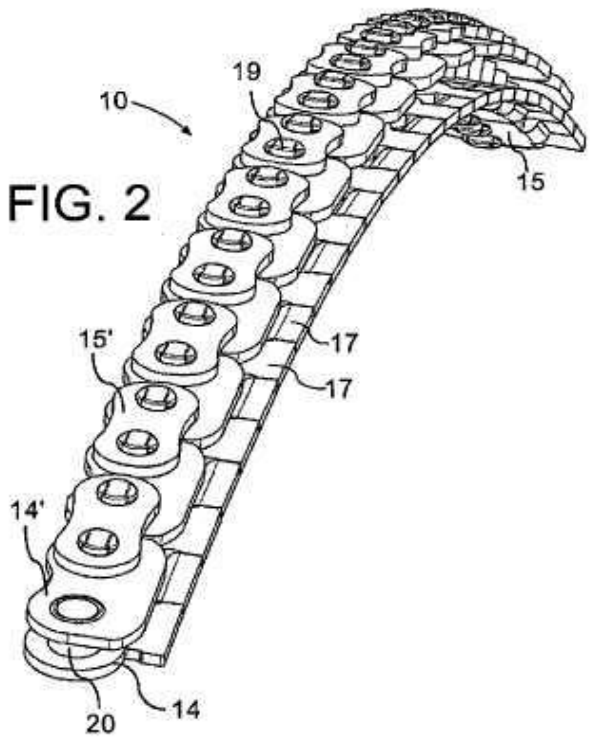

and other special characteristics of chains.

References

Informative references

Attention is drawn to the following places, which may be of interest for search:

Conveyor with chains or like traction elements	B65G 17/38
Jacks for lifting loads	B66F 3/06
Thrust chain devices	B66F 13/005
Push pull chains for wings	E05F 11/04, E05F 15/619

F16G 15/00

Chain couplings, Shackles; Chain joints; Chain links; Chain bushes (making chain elements B21L)

Definition statement

This place covers:

means for coupling chains; components of chains, e.g. shackles, swivels, chain joints, chain links or chain bushes;

References

Informative references

Attention is drawn to the following places, which may be of interest for search:

Fastening equipment for chains on ships	B63B 21/04

Adaptations of chains or the like on ships	B63B 21/20

F16G 15/02

for fastening more or less permanently

Definition statement

This place covers:

Illustrative example of subject matter classified in this group (DE10119307):

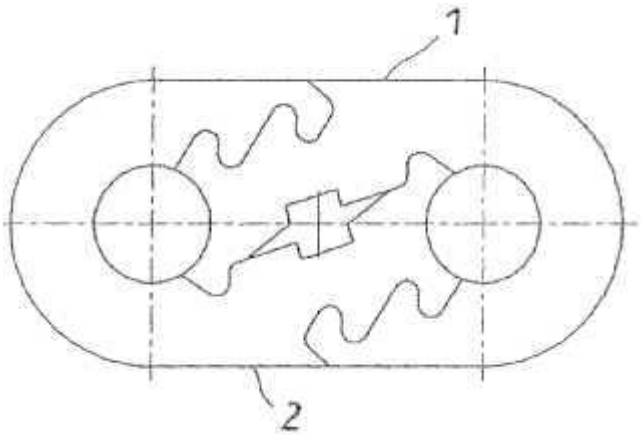

F16G 15/04

Quickly-detachable chain couplings; Shackles {chain links with rapid junction means are classified according to the corresponding kind of chain}

Definition statement

This place covers:

Illustrative example of subject matter classified in this group (US2011028255):

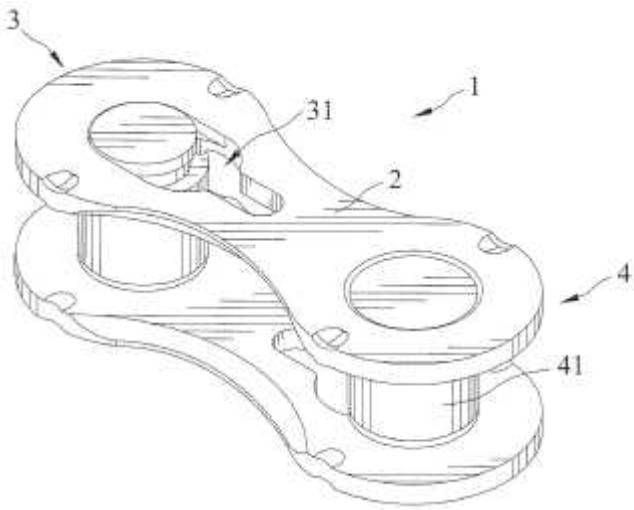

References

Informative references

Attention is drawn to the following places, which may be of interest for search:

Hooks for sailing purpose	B63H 9/08
Snaphook	F16B 45/00
Hooks	F16B 45/00
Hooks with pivoting closing member	F16B 45/02
Hooks with sliding closing member	F16B 45/04

F16G 15/06

Shackles designed for attachment by joint pins to chain elements, e.g. D-shackles {so called harp links; the D-chain links are classified according to the corresponding kind of chain}

Definition statement

This place covers:

Illustrative example of subject matter classified in this group (US2004075287):

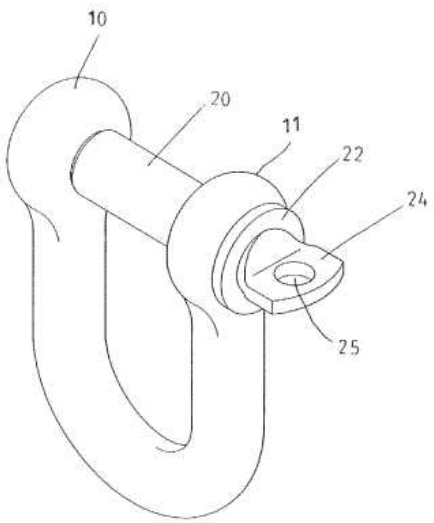

F16G 15/08

Swivels

Definition statement

This place covers:

Illustrative example of subject matter classified in this group (US2009208274):

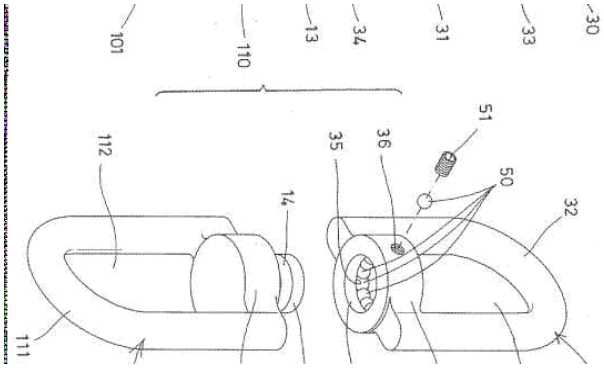

References

Informative references

Attention is drawn to the following places, which may be of interest for search:

Swivels for fishing purpose	A01K 91/04

F16G 15/12

Chain links

Definition statement

This place covers:

Illustrative example of subject matter classified in this group (US7032372):

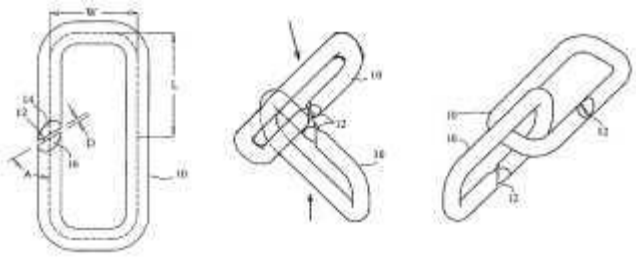

F16G 17/00

Hooks as integral parts of chains (hooks for cranes B66C 1/34; hooks in general F16B 45/00)

Definition statement

This place covers:

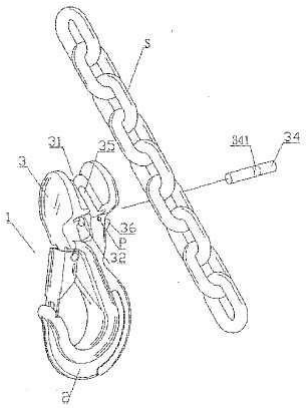

Hooks as integral parts of chains. Illustrative example (FR2855580):

References

Limiting references

This place does not cover:

Hooks for cranes	B66C 1/34
Hooks or eyes in general	F16B 45/00