# B66C

## CRANES; LOAD-ENGAGING ELEMENTS OR DEVICES FOR CRANES, CAPSTANS, WINCHES, OR TACKLES ({specially adapted for lifting invalids A61G 7/10;} rope, cable, or chain winding mechanisms, braking or detent devices therefor B66D; specially adapted for nuclear reactors G21)

### References

#### *Limiting references*

*This place does not cover:*

| | |
|---|---|
| Devices for lifting patients or disabled persons | A61G 7/10 |
| Toy cranes | A63H 17/12,<br>A63H 33/3044 |
| Devices for carrying objects by hand | B65G 7/12 |

### Special rules of classification

The following IPC groups are not used in this classification scheme.

Subject matter of these groups is classified in the following groups:

IPC **B66C23/61** classified in B66C 23/60

IPC **B66C23/683** classified in B66C 23/68

IPC **B66C23/687** classified in B66C 23/701

IPC **B66C23/69** classified in B66C 23/701

IPC **B66C23/693** classified in B66C 23/705

IPC **B66C23/697** classified in B66C 23/707

The scheme includes entry B66C 23/54, for which no corresponding IPC exists. Subject matter should be given an IPC classification in B66C 23/68

# B66C 1/00

## Load-engaging elements or devices attached to lifting or lowering gear of cranes or adapted for connection therewith for transmitting lifting forces to articles or groups of articles (fastening to cables or ropes F16G 11/00)

### Special rules of classification

Documents should be classified in the lowest subgroup possible and only classified in higher groups if none of the subgroups is applicable. If necessary documents should be classified in multiple subgroups. All non-trivial technical features should be classified. Main groups should only be used when no appropriate subgroup exists.

## B66C 1/02

### by suction means {(suction cups for attaching purposes F16B 47/00)}

### References

#### *Limiting references*

*This place does not cover:*

| | |
|---|---|
| Work holders | B25B 11/005 |
| Robots with suction lifting devices | B25J 15/0616 |
| Feed or transfer devices | B65G 47/91 |
| Conveying fragile sheets | B65G 49/061 |
| Separating articles from piles | B65H 3/0808 |
| Suction cups for attaching purposes | F16B 47/00 |

## B66C 1/0206

### {for handling bulk or bags}

### Definition statement

*This place covers:*

See for example US2007/0130884

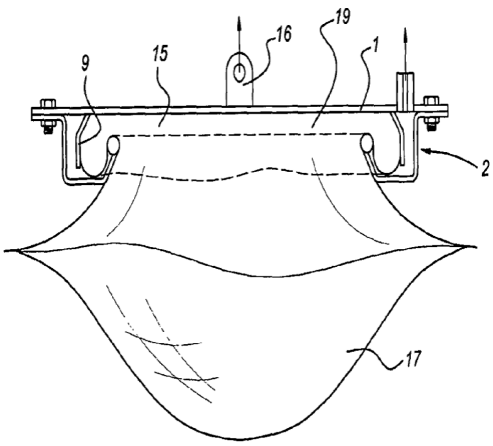


## B66C 1/0212

### {Circular shape}

### Definition statement

*This place covers:*

suction means with a circular shape

See for example EP 1 775 243

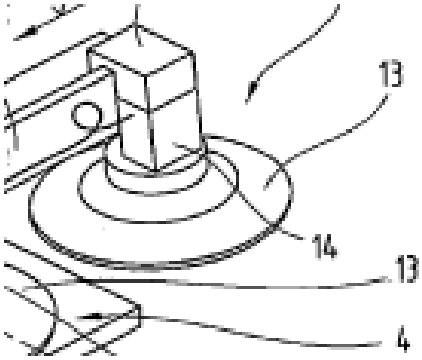


## B66C 1/0218

### {Safety measures, e.g. sensors, duplicate functions}

### Definition statement

*This place covers:*

Arrangements for ensuring correct vacuum level or preventing load from falling if vacuum is lost.

## B66C 1/0225

### {Hand held}

### Definition statement

*This place covers:*

Devices where the weight of the load is supported by the operator.

See for example US 2 212 755

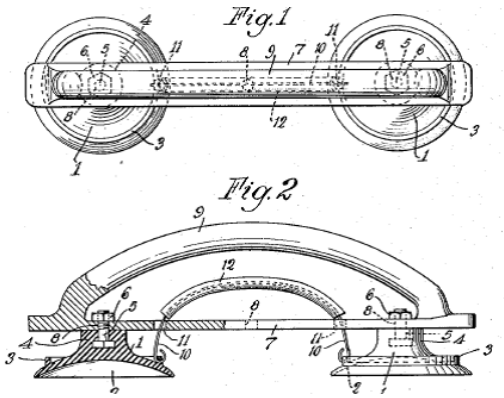


### Relationships with other classification places

Also classified in B65G 7/12

## B66C 1/0231

### {Special lip configurations}

### Definition statement

*This place covers:*

Devices where the edge of the suction cup has a particular arrangement, for example a shape.

See for example US 1 426 930

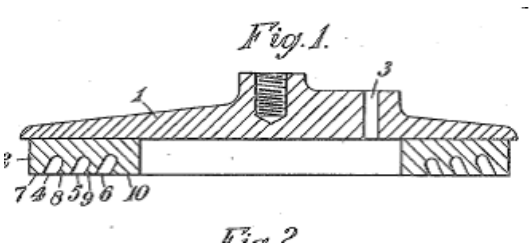


## B66C 1/0237

### {Multiple lifting units; More than one suction area}

### Definition statement

*This place covers:*

This group not used, devices classified in following two subgroups.

## B66C 1/0243

### {Separate cups}

### Definition statement

*This place covers:*

Devices where the suction cups are separated from each other by the mounting and/or piping arrangement.

See for example US 1 426 692

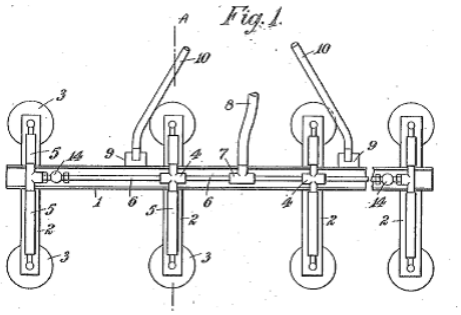

## B66C 1/025

### {Divided cups}

### Definition statement

*This place covers:*

Devices where the suction cup is a single unit with separated vacuum areas.

See for example EP 1 118 578

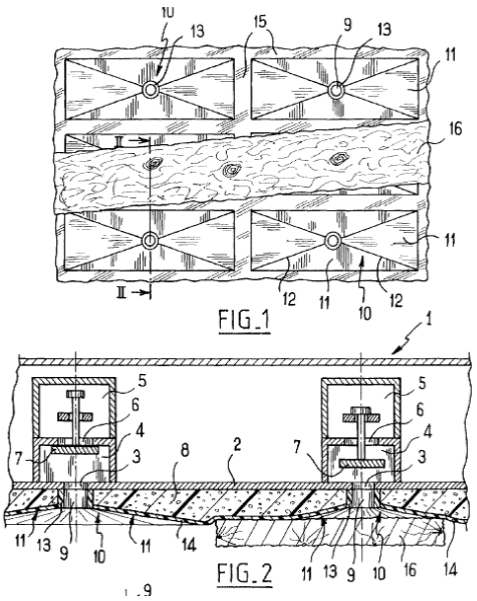


## B66C 1/0256

### {Operating and control devices}

### Definition statement

*This place covers:*

General control arrangements not covered by the following three subgroups.

## B66C 1/0262

### {for rotation}

### Definition statement

*This place covers:*

Devices for rotating the load being lifted.

See for example US 4 696 613

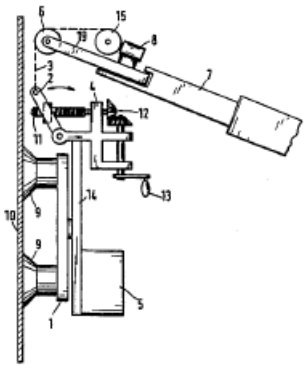

## B66C 1/0268

### {Venturi effect}

### Definition statement

*This place covers:*

Devices where the vacuum is created using venturi or bernouilli principle.

See for example GB 1 396 737

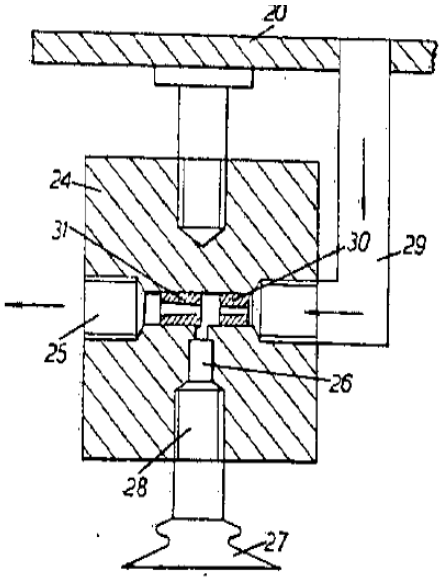


## B66C 1/0275

### {actuated by lifting action}

### Definition statement

*This place covers:*

Devices where the action of lifting the device creates the vacuum between the load and the suction cup.

See for example US 7 543 868

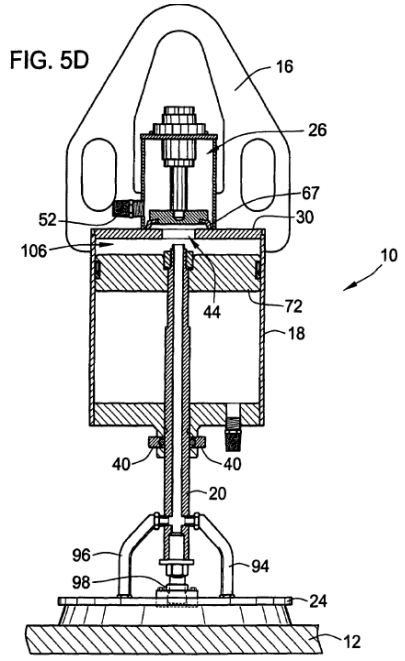


## B66C 1/0281

### {Rectangular or square shape}

### Definition statement

*This place covers:*

suction means with a rectangular shape

See for example US 3 506 297

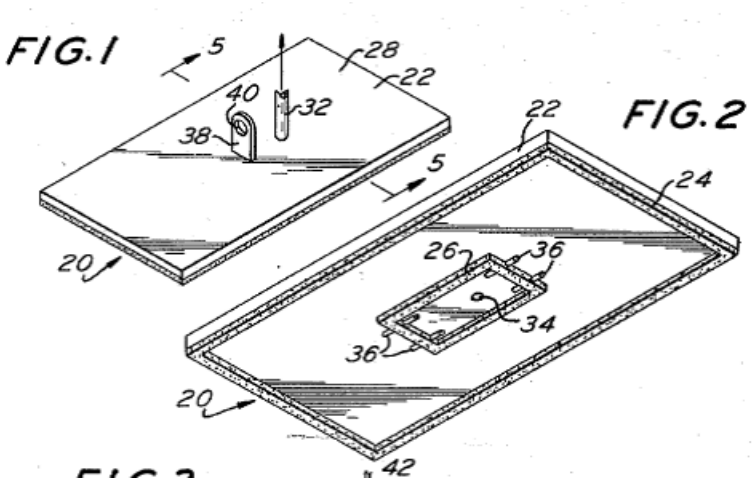

## B66C 1/0287

### {Other shapes, e.g. triangular or oval}

### Definition statement

*This place covers:*

Shapes which are neither circular nor rectangular or are non-planar.

See for example US 4 084 306

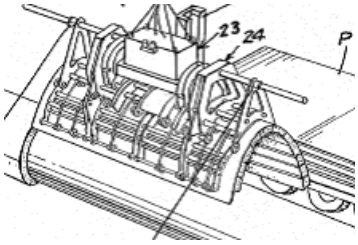


## B66C 1/0293

### {Single lifting units; Only one suction cup}

### Definition statement

*This place covers:*

Devices with only a single vacuum area.

See for example US 4 413 853

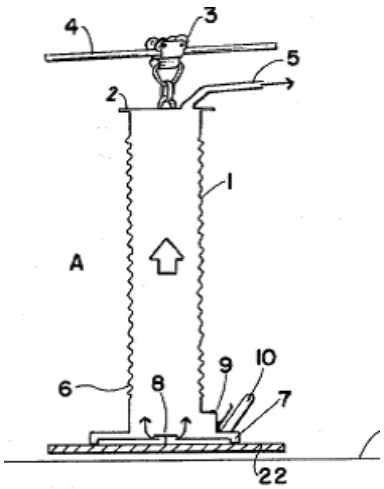


## B66C 1/04

### by magnetic means

### Definition statement

*This place covers:*

Lifting devices with permanent magnets.

## References

### *Limiting references*

*This place does not cover:*

| | |
|---|---|
| Work holders | B25B 11/002 |
| Robots with magnetic lifting devices | B25J 15/0608 |
| Feed or transfer devices | B65G 47/92 |
| Separating articles from piles | B65H 3/16 |
| Lifting devices with both electromagnets and permanent magnets | B66D 1/06 |

### *Informative references*

*Attention is drawn to the following places, which may be of interest for search:*

| | |
|---|---|
| Permanent magnets for lifting or picking up | H01F 7/0257 |

# B66C 1/06

**electromagnetic**

## References

### *Informative references*

*Attention is drawn to the following places, which may be of interest for search:*

| | |
|---|---|
| Electromagnets for lifting or transporting magnetic material | H01F 7/206 |

# B66C 1/08

**Circuits therefor (for electromagnets in general H01F 7/18)**

## References

### *Informative references*

*Attention is drawn to the following places, which may be of interest for search:*

| | |
|---|---|
| Circuits for electromagnets in general | H01F 7/18 |

# B66C 1/10

**by mechanical means**

## Definition statement

*This place covers:*

mechanical load engaging devices not covered by one of the following subgroups

See for example US 5 800 000

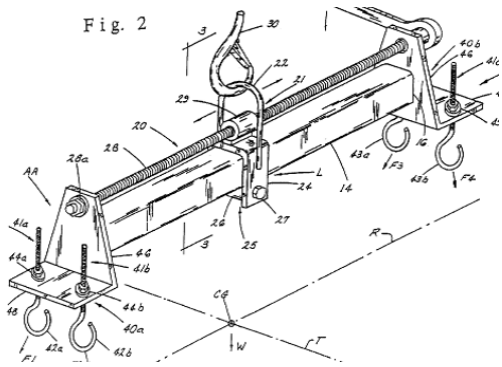


# B66C 1/101

## {for containers (B66C 1/223 and B66C 1/663 take precedence)}

### Definition statement

*This place covers:*

Lifting devices for containers.

See for example US 2008/0292440

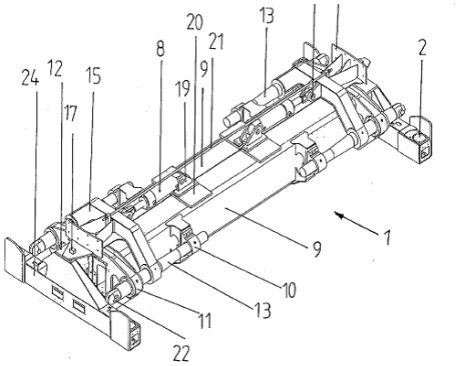


### References

#### *Limiting references*

*This place does not cover:*

| | |
|---|---|
| Connectors, e.g. twistlocks, for connecting a lifting device to a container | B66C 1/663 |

## B66C 1/102

### {for two or more containers end to end}

### Definition statement

*This place covers:*

See for example US 2009/0278368

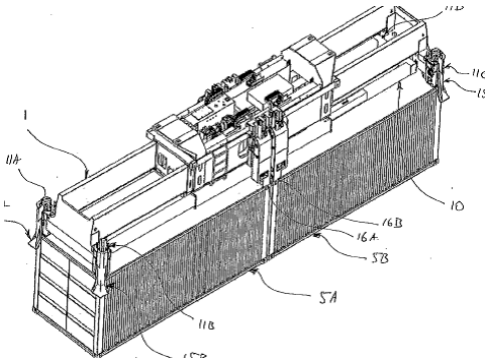


## B66C 1/104

### {for two or more containers side by side}

### Definition statement

*This place covers:*

See for example EP 1 857 401

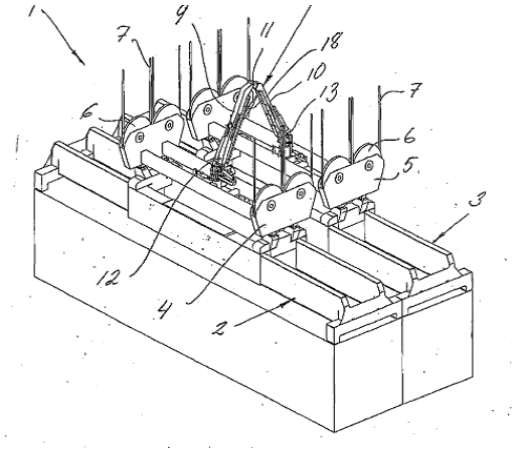


## B66C 1/105

### {Lifting beam permitting to depose a load through an opening}

### Definition statement

*This place covers:*

Devices where the load support is not directly under the crane hook, to allow the load to be deposited to one side.

See for example US 7 017 963

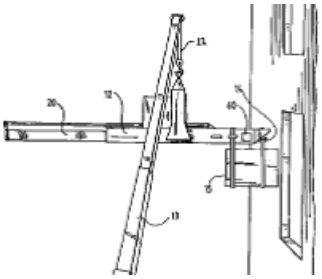

## B66C 1/107

### {for lifting engines}

### Definition statement

*This place covers:*

Load supporting devices for lifting engines.

See for example US 3 995 903.

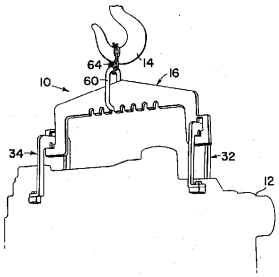


### References

#### *Limiting references*

*This place does not cover:*

| | |
|---|---|
| Manually movable cranes for lifting engines | B66C 23/485 |

## B66C 1/108

### {for lifting parts of wind turbines}

### Definition statement

*This place covers:*

Load supporting devices for wind turbine parts.

See for example US 2009/0025219.

FIG 1

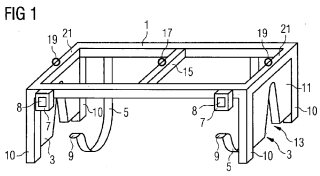

FIG 2

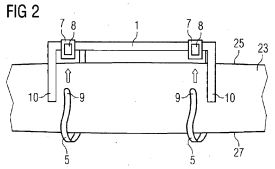

## References

### *Limiting references*

*This place does not cover:*

| | |
|---|---|
| Cranes for lifting wind turbines | B66C 23/185 |

# B66C 1/12

## Slings comprising chains, wires, ropes, or bands; Nets (article side grippers suspended by ropes or chains from crane hooks B66C 1/42)

## Definition statement

*This place covers:*

Slings not covered by one of the following subgroups.

Devices where a sling is suspended from a platform.

## References

### *Limiting references*

*This place does not cover:*

| | |
|---|---|
| Devices where a platform is suspended from a sling | B66C 1/16 |
| Construction of cables or slings | D07B 1/00 |

# B66C 1/122

## {Sling or load protectors}

## Definition statement

*This place covers:*

Devices for protecting the sling from damage.

See for example US 4 039 218

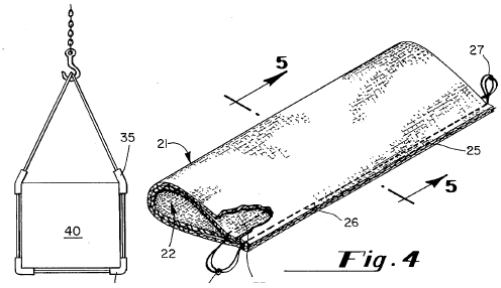


## References

### *Limiting references*

*This place does not cover:*

| | |
|---|---|
| Devices for protecting the load | B65D 71/04 |

# B66C 1/125

## {Chain-type slings (chains in general F16G)}

## Definition statement

*This place covers:*

Lifting chains connecting the load to the lifting device

See for example US 2 989 287

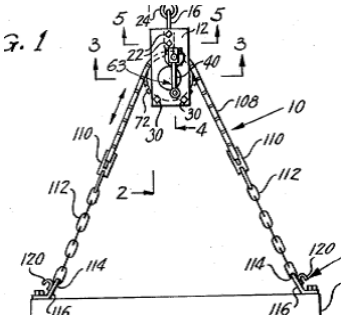


## References

### *Limiting references*

*This place does not cover:*

| | |
|---|---|
| Chains with hook for attaching to load | B66C 1/14 |
| General chains | F16G |

# B66C 1/127

## {Nets}

### Definition statement

*This place covers:*

See for example US 3 142 507

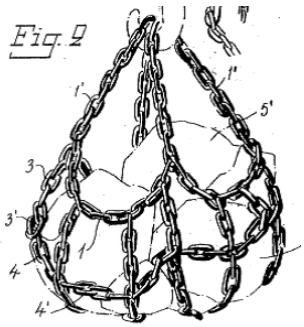


# B66C 1/14

## Slings with hooks

### Definition statement

*This place covers:*

Chains or slings with hooks to attach to load.

See for example US 4 017 111

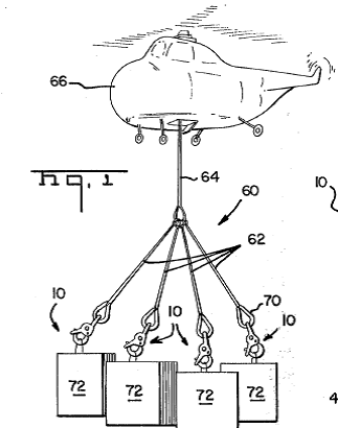


### References

#### *Limiting references*

*This place does not cover:*

| | |
|---|---|
| Chains with hook for attaching to chain link to form a loop around load | B66C 1/125 |
| Devices for lifting barrels | B66C 1/625 |

## B66C 1/16

### Slings with load-engaging platforms or frameworks

### Definition statement

*This place covers:*

Devices where a platform is suspended from a sling.

See for example US 4 831 967

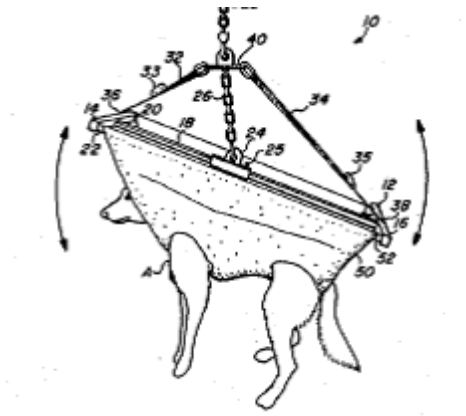

### References

#### *Limiting references*

*This place does not cover:*

| | |
|---|---|
| Devices where a sling is suspended from a platform | B66C 1/12 |

## B66C 1/18

### Band-type slings

### Definition statement

*This place covers:*

Slings with a flat cross-section.

See for example US 2008/0277952

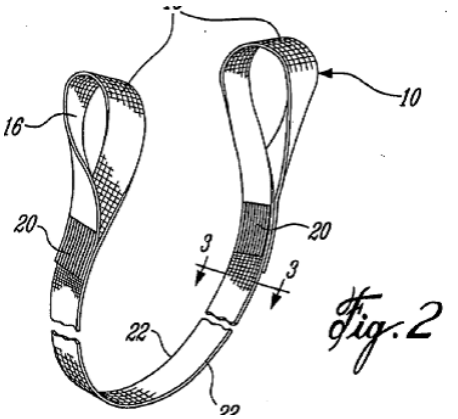

## References

### *Limiting references*

*This place does not cover:*

| | |
|---|---|
| Straps for attaching loads e.g. to trucks | B60P 7/0823 |
| Construction of cables or slings | D07B 1/22 |

# B66C 1/20

**specially adapted for handling vehicles**

## Definition statement

*This place covers:*

See for example US 4 232 893

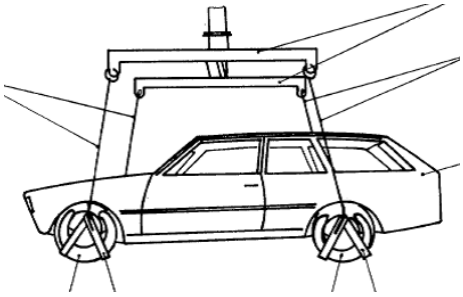

# B66C 1/22

**Rigid members, e.g. L-shaped members, with parts engaging the under surface of the loads; Crane hooks**

## Definition statement

*This place covers:*

See for example US 3 010 751

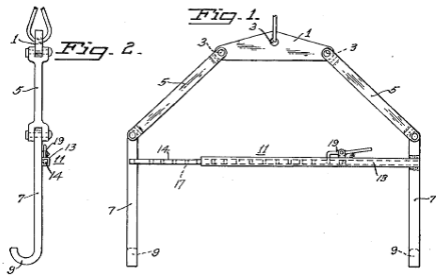


# B66C 1/223

**{for containers}**

## Definition statement

*This place covers:*

Rigid lifting devices for lifting a container from below

See for example US 5 649 805

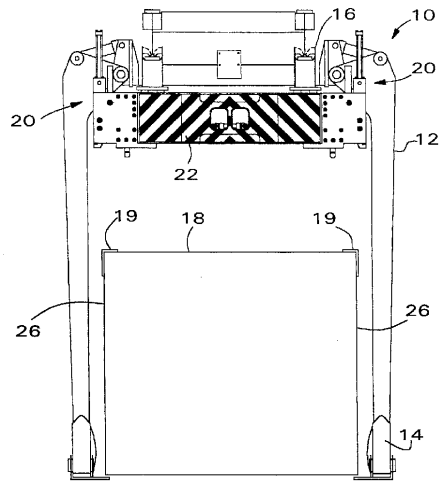


## References

### *Limiting references*

*This place does not cover:*

| | |
|---|---|
| Lifting (e.g. from above) using twistlocks | B66C 1/663 |

# B66C 1/226

## {for flexible intermediate bulk containers [FIBC]}

## Definition statement

*This place covers:*

See for example US 2005/0199650

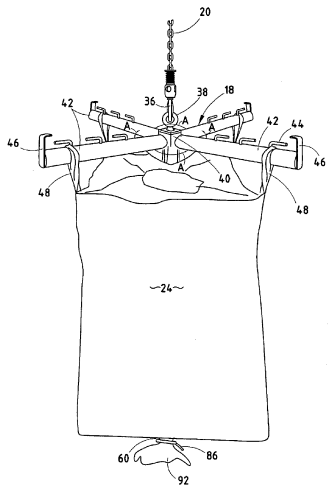

## B66C 1/24

### Single members engaging the loads from one side only

### Definition statement

*This place covers:*

See for example US 2006/0175850

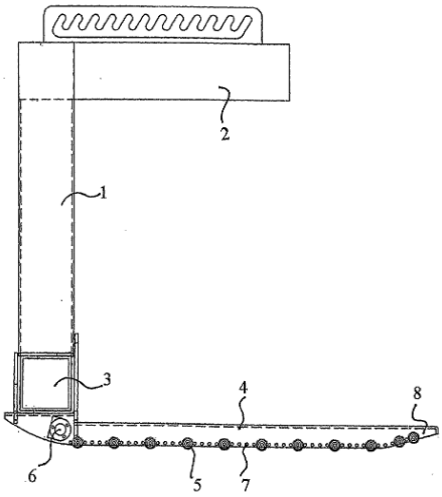


## B66C 1/26

### with means for releasing the loads

### Definition statement

*This place covers:*

See for example US 1 777 119

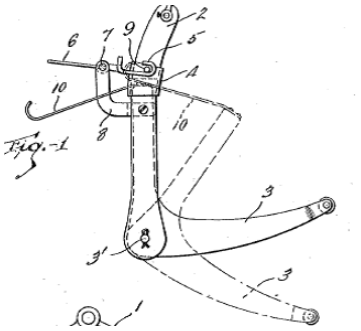

## B66C 1/28

### Duplicate, e.g. pivoted, members engaging the loads from two sides

#### Definition statement

*This place covers:*

See for example US 5 066 189

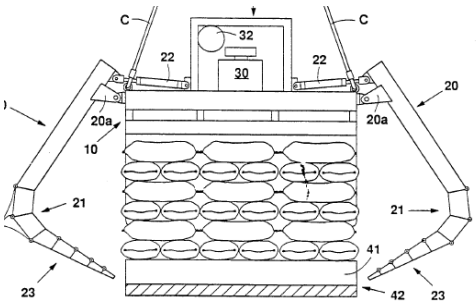


FIG. 6

## B66C 1/30

### and also arranged to grip the sides of the loads

#### Definition statement

*This place covers:*

See for example US 3 001 812

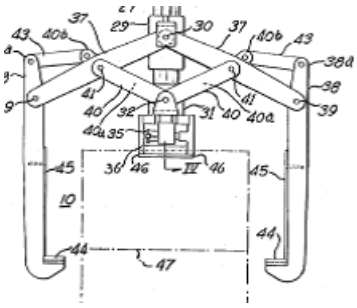

## B66C 1/32

### of piled or stacked articles

### Definition statement

*This place covers:*

See for example US 2 670 985

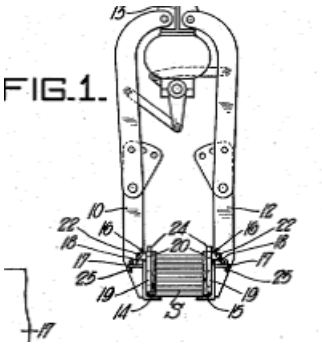


## B66C 1/34

### Crane hooks

### Definition statement

*This place covers:*

See for example US 2011/0011818

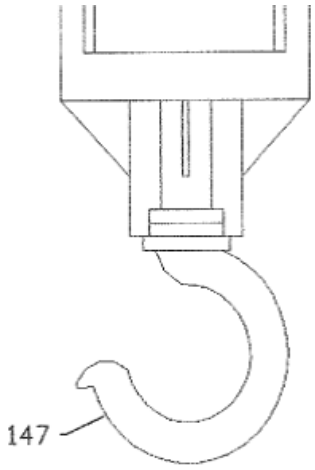

## B66C 1/36

### with means, e.g. spring-biased detents, for preventing inadvertent disengagement of loads

### Definition statement

*This place covers:*

See for example US 2009/0049663

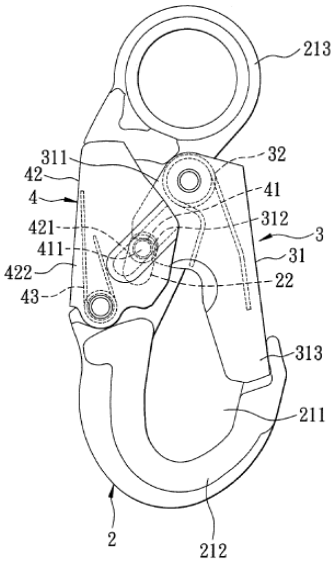


## B66C 1/38

### adapted for automatic disengagement from loads on release of cable tensions (for parachutes {B64D 17/00})

### Definition statement

*This place covers:*

Hooks where the load is automatically released when the load is lowered.

See for example US 5 292 165

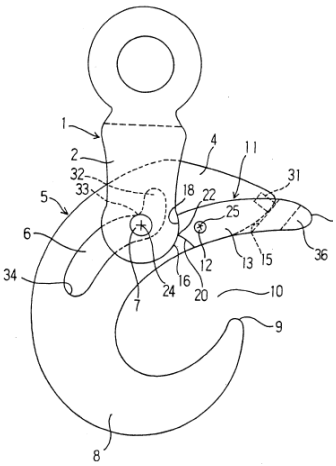

## References

### *Limiting references*

*This place does not cover:*

| | |
|---|---|
| Non-automatic release arrangements | B66C 1/34 |

# B66C 1/40

## formed or fitted with load measuring or indicating devices

## Definition statement

*This place covers:*

Load measurement on the hook.

See for example US 2010/0037700

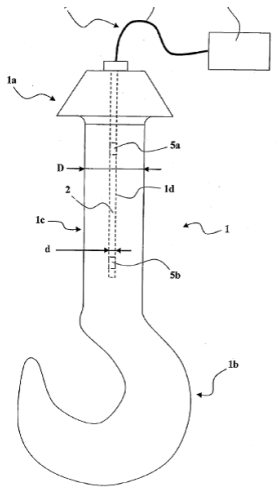


## References

### *Limiting references*

*This place does not cover:*

| | |
|---|---|
| Load measurement elsewhere on crane | B66C 13/16 |

# B66C 1/42

## Gripping members engaging only the external or internal surfaces of the articles (for handling or stripping castings or ingots during manufacture B22D 29/00)

## Definition statement

*This place covers:*

Gripping members not relying on friction to hold load, e.g. where the shape of the device ensures sufficient hold.

## References

### *Limiting references*

*This place does not cover:*

| | |
|---|---|
| Gripping members for particular articles | B66C 1/62 |

## B66C 1/422

**{actuated by lifting force (B66C 1/44, B66C 1/58 take precedence)}**

### Definition statement

*This place covers:*

See for example US 5 842 729

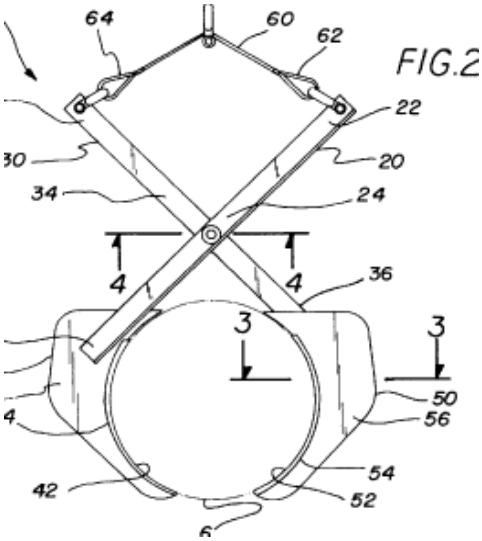


## B66C 1/425

**{motor actuated (B66C 1/44, B66C 1/58 take precedence)}**

### Definition statement

*This place covers:*

See for example US 2 226 789

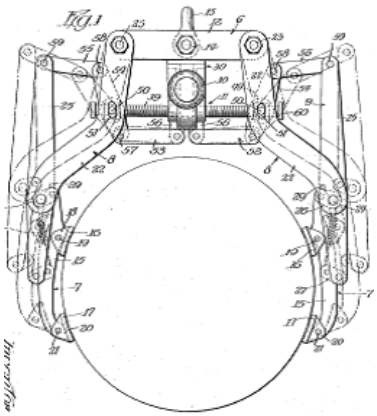

## B66C 1/427

### {by hydraulic or pneumatic motors}

### Definition statement

*This place covers:*

Devices using fluid motors or cylinders.

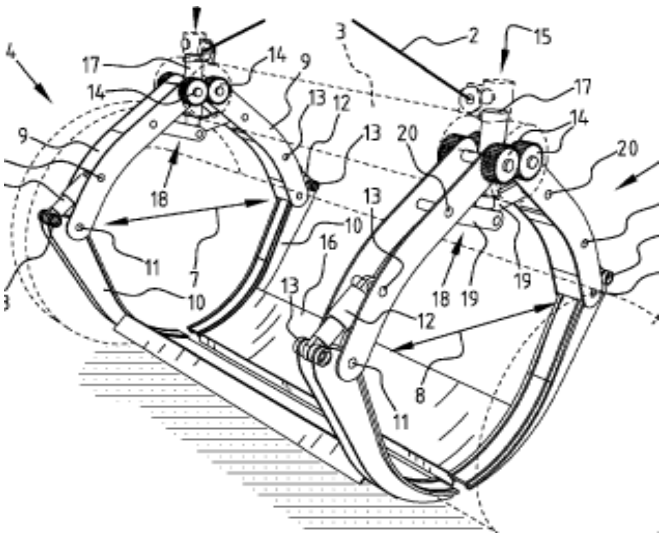


## B66C 1/44

### and applying frictional forces

### Definition statement

*This place covers:*

Gripping members relying on friction to hold load.

## B66C 1/442

### {actuated by lifting force}

### Definition statement

*This place covers:*

See for example US 5 280 982

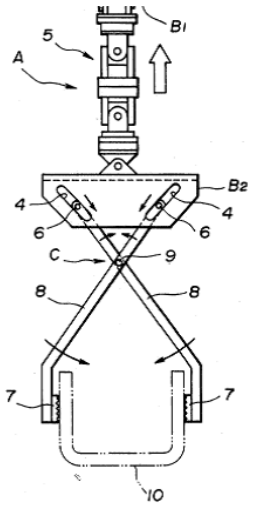


## B66C 1/445

### {motor actuated}

### Definition statement

*This place covers:*

See for example US 5 997 064

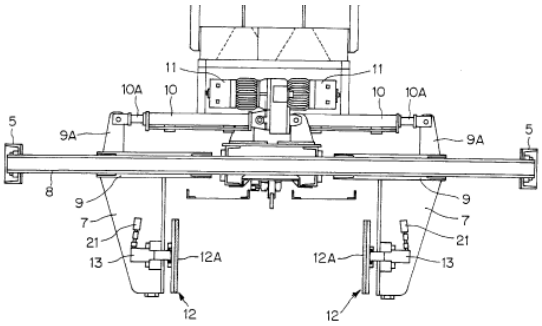

## B66C 1/447

### {by hydraulic or pneumatic motors}

### Definition statement

*This place covers:*

See for example US 5 209 536

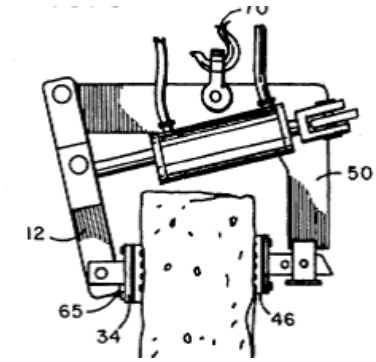


## B66C 1/46

### by inflatable elements

### Definition statement

*This place covers:*

See for example US 3 219 382

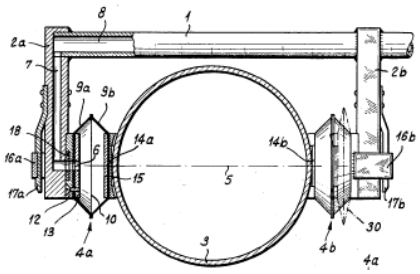

## B66C 1/48

### to vertical edge portions of sheets, tubes, or like thin or thin-walled articles (internally-expanding grippers B66C 1/54)

### Definition statement

*This place covers:*

See for example US 2009/0218836

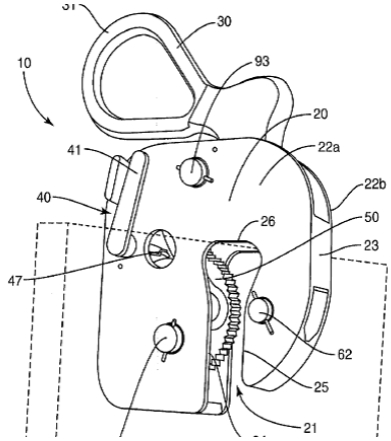


## B66C 1/485

### {Coil lifting devices}

### Definition statement

*This place covers:*

See for example US 4 253 696

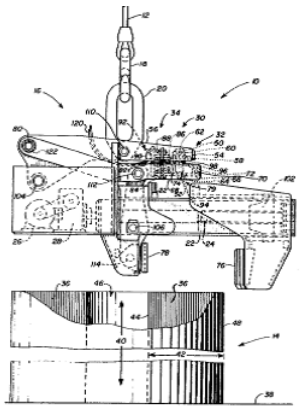

### References

#### *Limiting references*

*This place does not cover:*

| | |
|---|---|
| Lifting coils using magnets | B66C 1/04 |
| Lifting coils using internal grippers | B66C 1/54 |

## B66C 1/54

### Internally-expanding grippers for handling hollow articles (B66C 1/46 takes precedence)

### Definition statement

*This place covers:*

See for example US 5 971 457

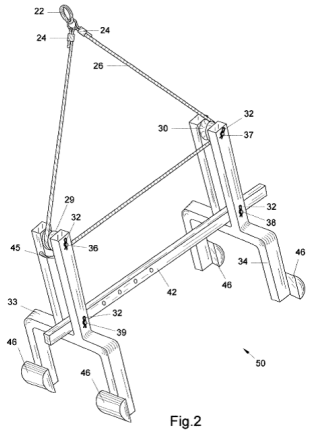


Fig.2

## B66C 1/56

### for handling tubes

### Definition statement

*This place covers:*

See for example US 2 778 671

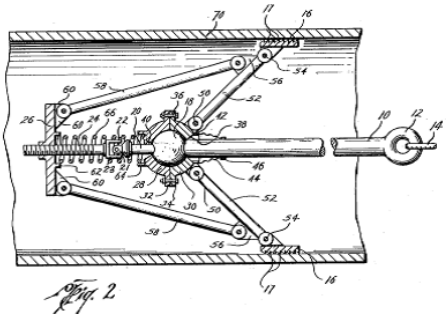

Fig. 2

## B66C 1/58

### and deforming the articles, e.g. by using gripping members such as tongs or grapples

#### Definition statement

*This place covers:*

See for example US 3 695 670

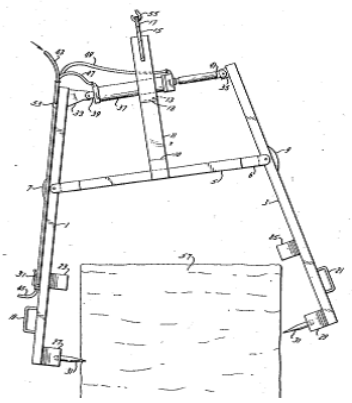

## B66C 1/585

### {Log grapples}

#### Definition statement

*This place covers:*

See for example US 6 315 344

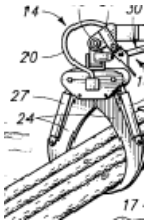

## B66C 1/59

### Tongs for sacks

#### Definition statement

*This place covers:*

See for example US 4 648 646

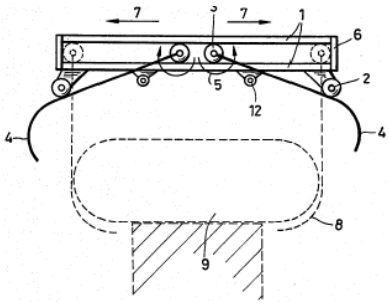


## B66C 1/62

### comprising article-engaging members of a shape complementary to that of the articles to be handled

#### Definition statement

*This place covers:*

See for example US 5 158 416

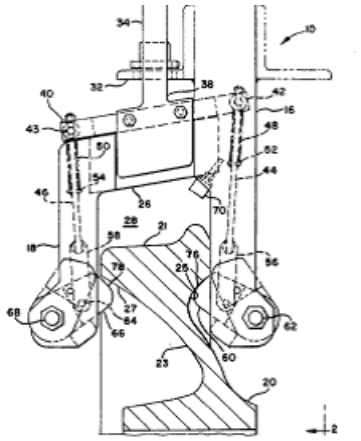

## B66C 1/625

### {for gripping drums or barrels}

#### Definition statement

*This place covers:*

devices gripping drums or barrels either by their body or edges

See for example US2010/0140968

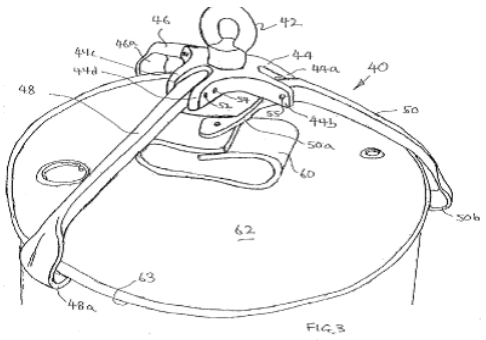


## B66C 1/64

### for T- or I-section beams or girders

### Definition statement

*This place covers:*

See for example US 4 371 203

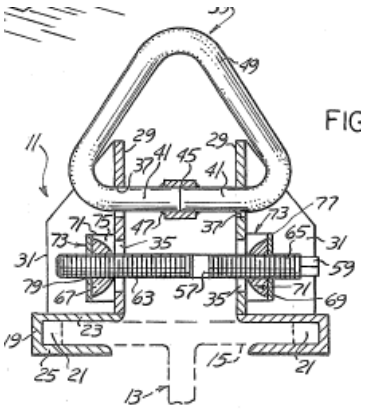


## B66C 1/66

### for engaging holes, recesses, or abutments on articles specially provided for facilitating handling thereof

### Definition statement

*This place covers:*

Devices such as lifting rings or pins lifting via holes in object being lifted

See for example US 7 014 230

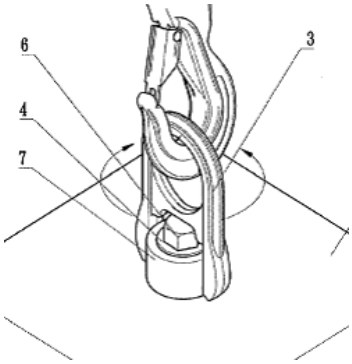


## B66C 1/663

### {for containers (fastening of containers on vehicles B60P 7/13, B60P 7/132)}

### Definition statement

*This place covers:*

Devices such as twistlocks, which connect a lifting device to a container

See for example US 2004/0256266

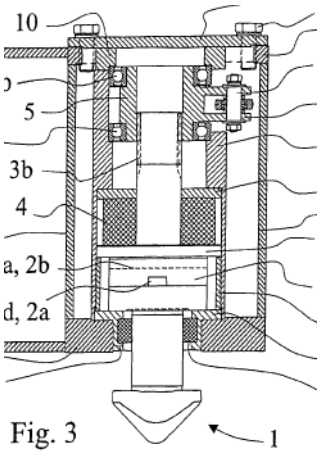


Fig. 3

### References

#### *Limiting references*

*This place does not cover:*

| | |
|---|---|
| Lifting devices per se such as spreaders for containers | B66C 1/101 |
| Lifting from below container | B66C 1/223 |

# B66C 1/666

## {for connection to anchor inserts embedded in concrete structures}

### Definition statement

*This place covers:*

See for example US 4 634 164

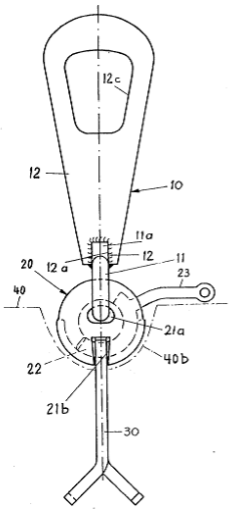


FIG.1

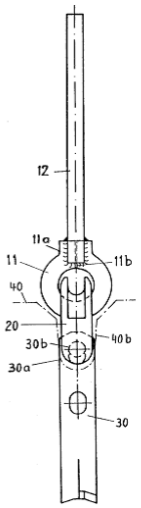


FIG.2

### References

#### *Informative references*

*Attention is drawn to the following places, which may be of interest for search:*

| | |
|---|---|
| Anchors in concrete elements | E04G 21/142 |

# B66C 1/68

## mounted on, or guided by, jibs (jibs B66C 23/64)

### Definition statement

*This place covers:*

lifting devices mounted on a rigid arm, boom, jib etc. rather than suspended from a flexible element such as a cable or chain

See for example US 2009/0245989

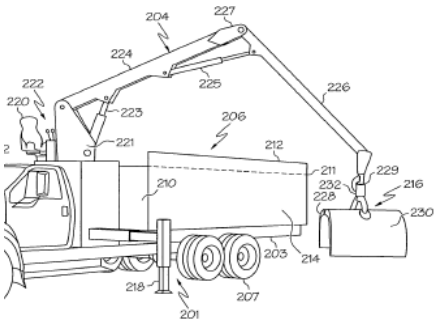

## B66C 3/005

### {Grab supports, e.g. articulations; Oscillation dampers; Orientation (B66C 3/16 takes precedence)}

### Definition statement

*This place covers:*

See for example US 2006/0086685

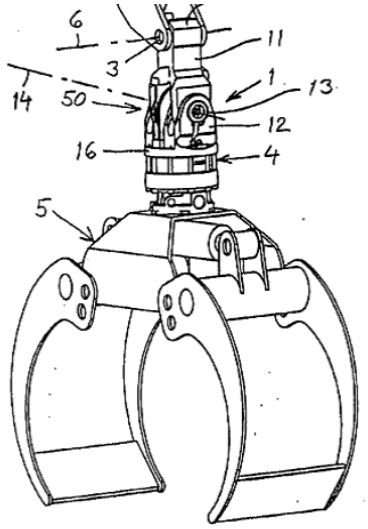


## B66C 3/02

### Bucket grabs

### Definition statement

*This place covers:*

See for example US 3 949 498

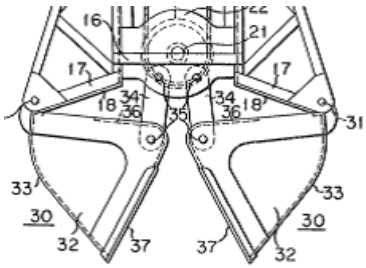

# B66C 3/04

## Tine grabs

### Definition statement

*This place covers:*

See for example US 2003/0042748

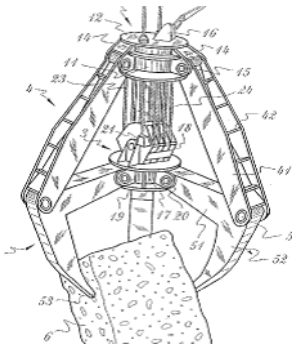

# B66C 3/06

## Grabs actuated by a single rope or chain

### Definition statement

*This place covers:*

Devices where a single rope is used for both raising and subgroupsering and opening/closing.

See for example US 5 649 729

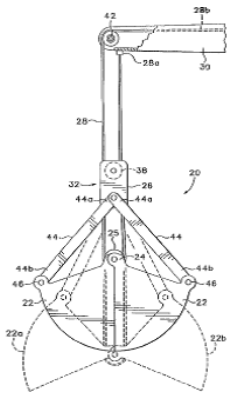

## B66C 3/08

### and having tipping rings

### Definition statement

*This place covers:*

See for example US 1 853 250

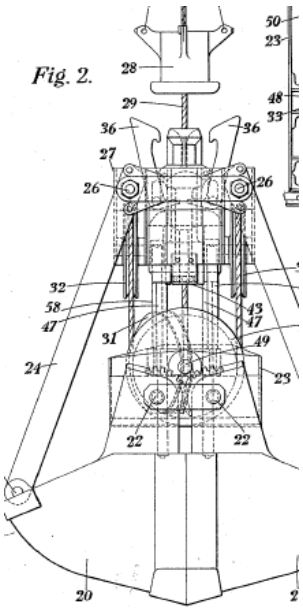


## B66C 3/10

### and having buckets opening automatically upon the grab being lowered on to the dump of material

### Definition statement

*This place covers:*

See for example US 4 807 918

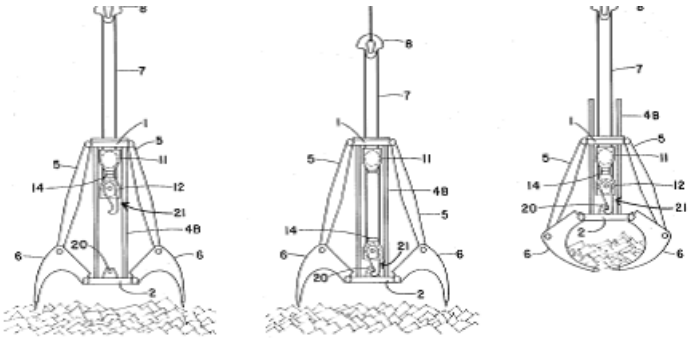

## B66C 3/105

### {Devices for control}

### Definition statement

*This place covers:*

See for example US 2 270 916

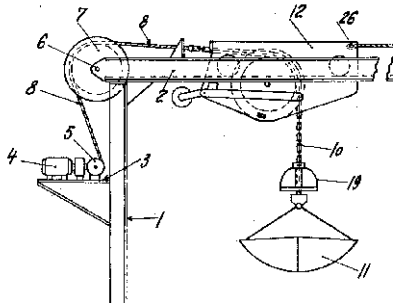


## B66C 3/12

### Grabs actuated by two or more ropes

### Definition statement

*This place covers:*

Devices where separate ropes are used for raising and subgroupsering and opening/closing.

See for example US 4 328 987

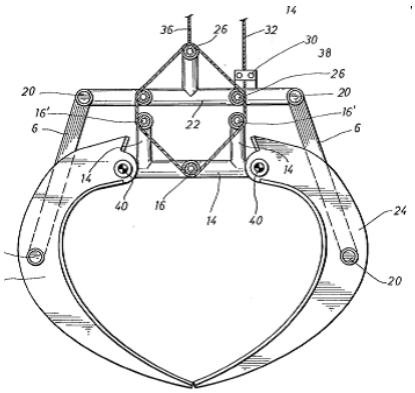

## B66C 3/125

### {Devices for control}

### Definition statement

*This place covers:*

See for example US 4 231 698

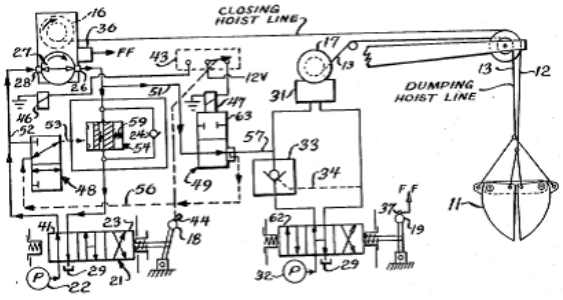


## B66C 3/14

### Grabs opened or closed by driving motors thereon

### Definition statement

*This place covers:*

Grabs operated other than by electric or hydraulic motors, e.g. magnets

See for example US 6 179 357

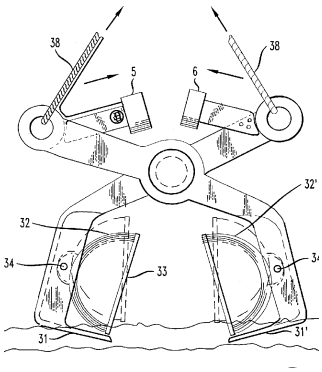

## B66C 3/16

### by fluid motors

### Definition statement

*This place covers:*

See for example US 2006/0230649

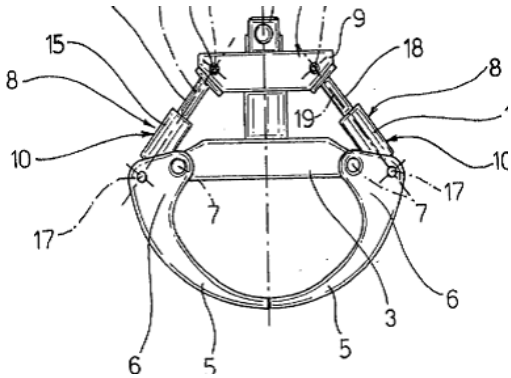


## B66C 3/18

### by electric motors

### Definition statement

*This place covers:*

See for example US 5 622 468

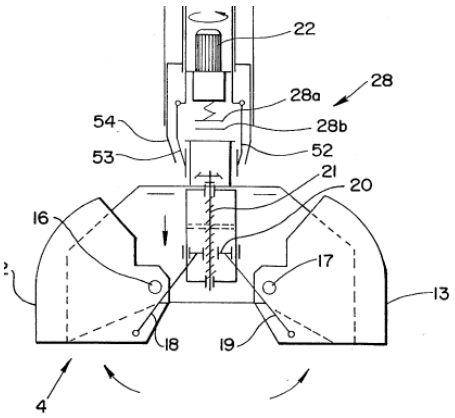

## B66C 3/20

### mounted on, or guided by, jibs (jibs B66C 23/64)

#### Definition statement

*This place covers:*

See for example US 2009/0250887

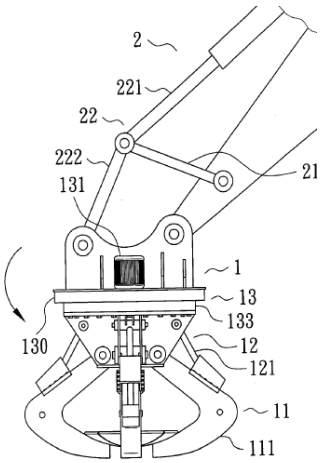


## B66C 5/02

### Fixed or travelling bridges or gantries, i.e. elongated structures of inverted L or of inverted U shape {or tripods}

#### Definition statement

*This place covers:*

See for example US 7 503 460

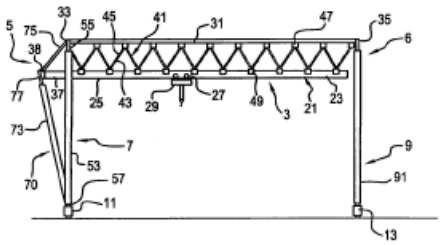

## B66C 5/025

### {Tripods}

### Definition statement

*This place covers:*

See for example US 6 283 455

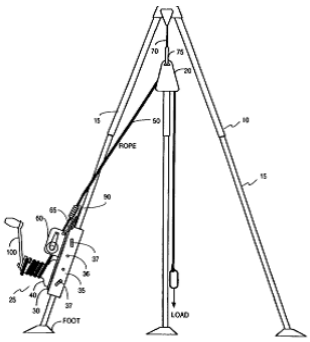


## B66C 5/04

### with runways or tracks supported for movements relative to bridge or gantry

### Definition statement

*This place covers:*

See for example US 4 106 641

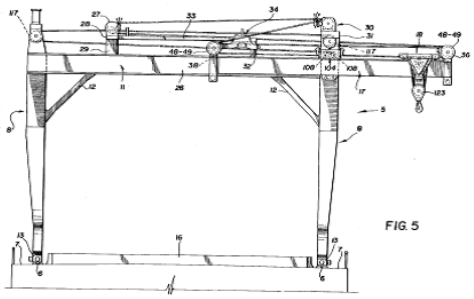

## B66C 5/06

### with runways or tracks supported for lateral swinging movements

### Definition statement

*This place covers:*

See for example US 5 593 050

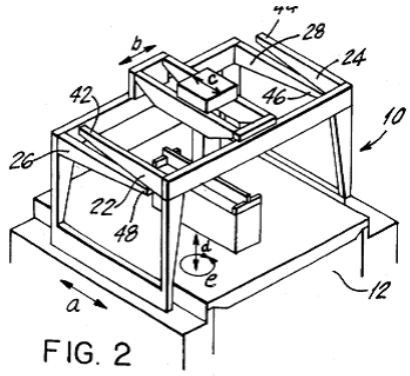


FIG. 2

## B66C 5/08

### with vertically invlinable runways or tracks

### Definition statement

*This place covers:*

See for example US 4 762 240

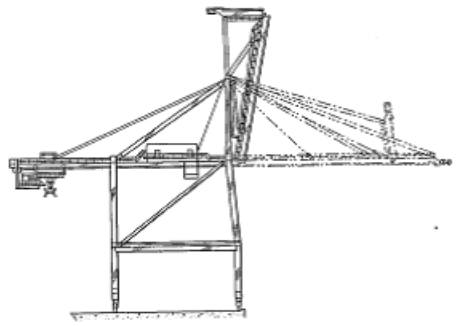

## B66C 5/10

### Portals, i.e. essentially circular or square platforms with three or more legs specially adapted for supporting slewing jib cranes

#### Definition statement

*This place covers:*

See for example US 2008/0237174

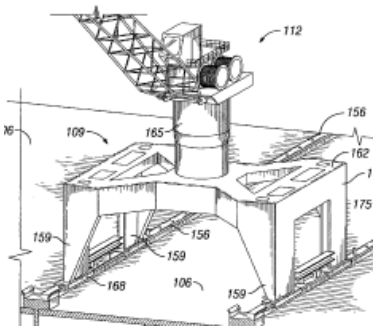


## B66C 6/00

### Girders, or track-supporting structures, specially adapted for cranes (base supporting structures with legs B66C 5/00; girders in general E04C 3/02)

#### Definition statement

*This place covers:*

See for example US 3 319 802

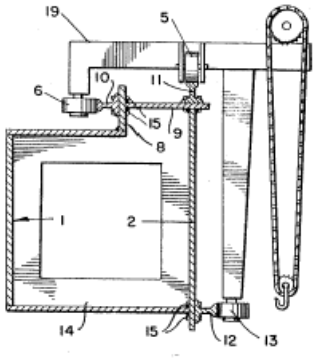


#### References

##### *Limiting references*

*This place does not cover:*

| | |
|---|---|
| Runways or tracks for trolleys | B66C 7/00 |

## B66C 7/02

### for underhung trolleys or cranes

### Definition statement

*This place covers:*

See for example US2002/0014568

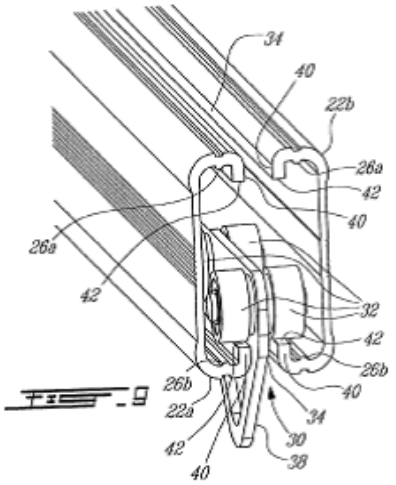


## B66C 7/04

### Trackway suspension

### Definition statement

*This place covers:*

See for example US 2007/0186800

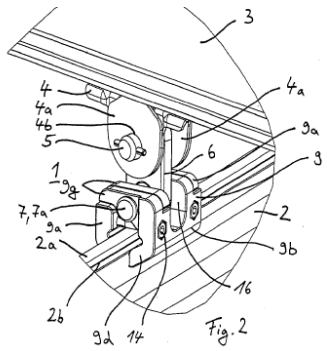


## B66C 7/08

### Constructional features of runway rails or rail mountings (of general application E01B)

### Definition statement

*This place covers:*

Details of rails, mountings, suspension etc.

See for example US 3 335 955

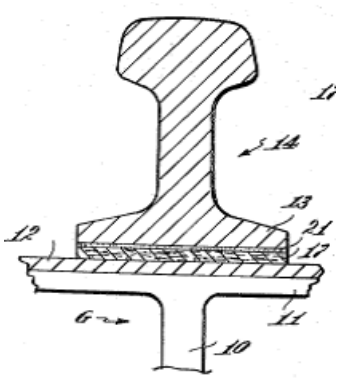

## References

### *Limiting references*

*This place does not cover:*

| | |
|---|---|
| Devices for underhung trolleys | B66C 7/02 |

# B66C 7/10

## Arrangements or devices for extending runways or tracks

## Definition statement

*This place covers:*

Extension parts with different section.

Extensions pivoted to or telescoped in end of track section.

See for example US 2006/0260502

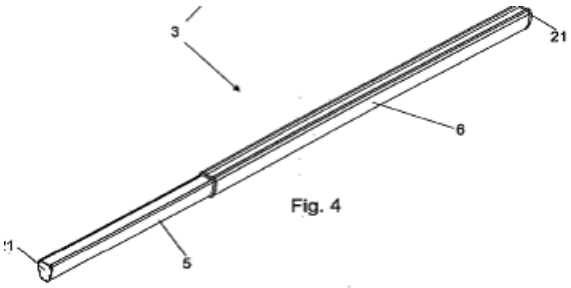


Fig. 4

## References

### *Limiting references*

*This place does not cover:*

| | |
|---|---|
| Similar track sections joined to each other | B66C 7/14 |

## B66C 7/12

### Devices for changing direction of travel or for transferring from one runway to another; Crossings; Combinations of tracks of different gauges (transfer devices of general application E01B)

### Definition statement

*This place covers:*

Devices on rails for allowing transfer.

See for example US 2003/0140816

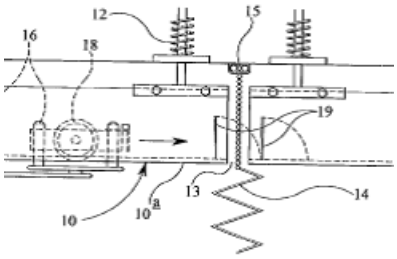


### References

#### *Limiting references*

*This place does not cover:*

| | |
|---|---|
| Devices on trolleys allowing transfer to other rail | B66C 9/04 |
| Devices on trolleys allowing transfer to different gauge | B66C 9/06 |

## B66C 7/14

### Runway interlocking devices

### Definition statement

*This place covers:*

Similar track sections joined to each other.

See for example US2010/0019055

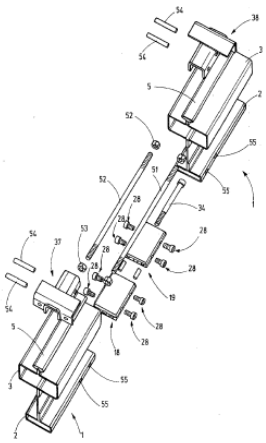

## References

### *Limiting references*

*This place does not cover:*

| | |
|---|---|
| Extension parts with different section or pivoted /telescoping extensions | B66C 7/10 |

# B66C 7/16

**Devices specially adapted for limiting trolley or crane travel; Arrangements of buffer-stops (buffer-stops of interest apart from this application B61K 7/18; limit-switch arrangements, limit circuits B66D 1/56)**

## Definition statement

*This place covers:*

See for example US 6 216 601

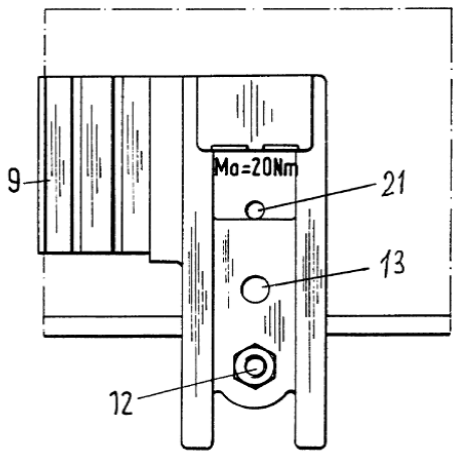


# B66C 9/02

**for underhung trolleys or cranes**

## Definition statement

*This place covers:*

Trolley suspension arrangements

See for example US US2011/0076125

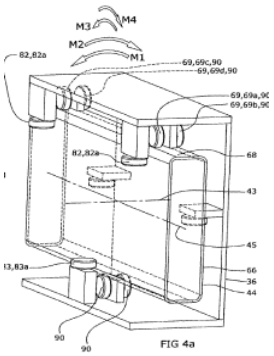

# B66C 9/04

## to facilitate negotiation of curves

### Definition statement

*This place covers:*

Steering of wheeled cranes.

See for example US 6 206 127

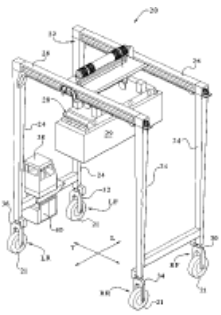

Wheel arrangements for running around curves on rails.

See for example US 5 623 879

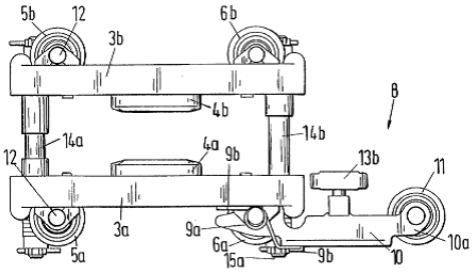


# B66C 9/06

## for more than one rail gauge

### Definition statement

*This place covers:*

Trolleys adapted to run on different rails.

See for example EP 0 204 383

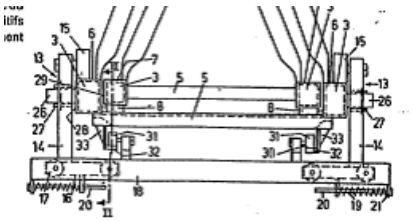

## References

### *Limiting references*

*This place does not cover:*

| | |
|---|---|
| Devices on rails for allowing transfer | B66C 7/12 |

# B66C 9/08

## Runners; Runner bearings (wheels for railbound vehicles B60B)

## Definition statement

*This place covers:*

See for example US 2008/0210654

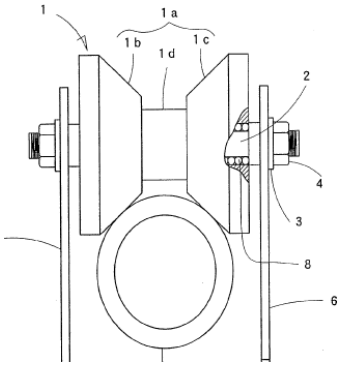


# B66C 9/10

## Undercarriages or bogies, e.g. end carriages, end bogies

## Definition statement

*This place covers:*

Bogies for end of bridge of overhead cranes or bogies for wheeled cranes.

See for example US 5 161 730

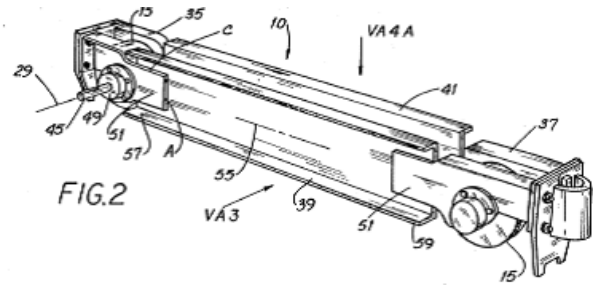

## B66C 9/12

### with load-distributing means for equalising wheel pressure

### Definition statement

*This place covers:*

See for example US 3 877 391

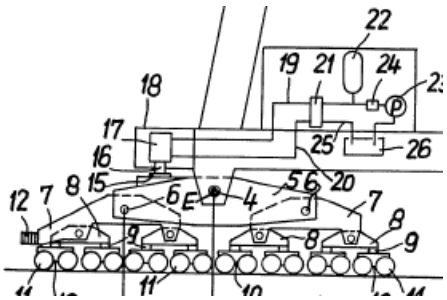


## B66C 9/14

### Trolley or crane travel drives (rope, cable, or chain drives for loads or trolleys B66C 11/16; control B66C 13/18)

### Definition statement

*This place covers:*

See for example US 2008/0047919

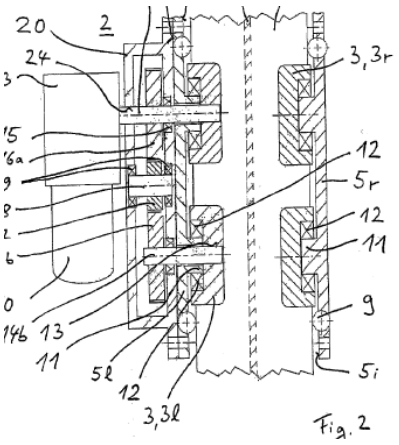

## B66C 9/16

### with means for maintaining alignment between wheels and track

### Definition statement

*This place covers:*

See for example US 6 082 562

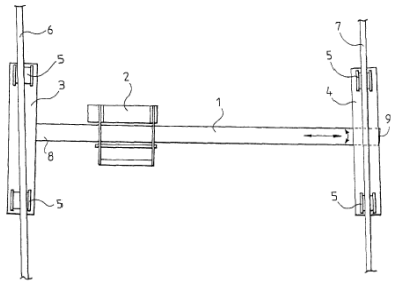


## B66C 9/18

### with means for locking trolleys or cranes to runways or tracks to prevent inadvertent movements

### Definition statement

*This place covers:*

Braking devices.

See for example US 2001/0052439

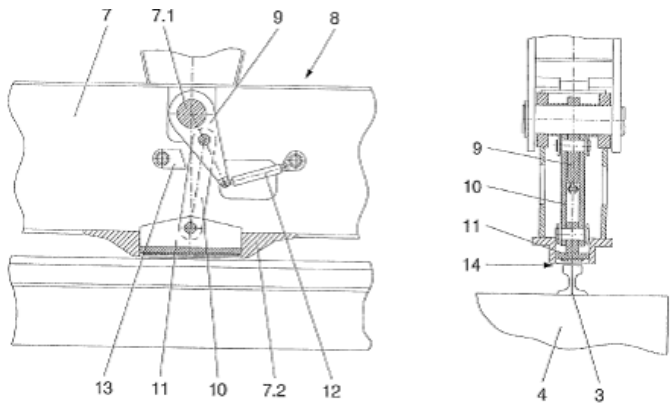

## B66C 11/02

### with operating gear or operator's cabin suspended, or laterally offset, from runway or track

#### Definition statement

*This place covers:*

See for example US 4 752 011

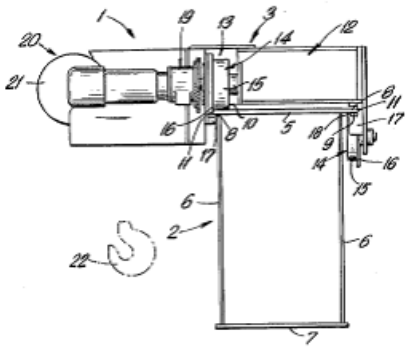

## B66C 11/04

### Underhung trolleys (power-operated hoists with driving motor and drum or barrel contained in a common housing B66D 3/20)

#### Definition statement

*This place covers:*

See for example WO 94/03388

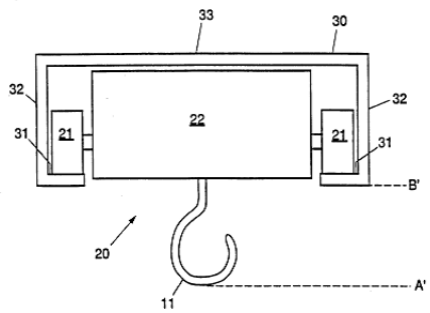


## B66C 11/06

### running on monorails (overhead railway systems B61B)

#### Definition statement

*This place covers:*

Smaller trolleys supported by a single rail.

See for example US 6 250 484

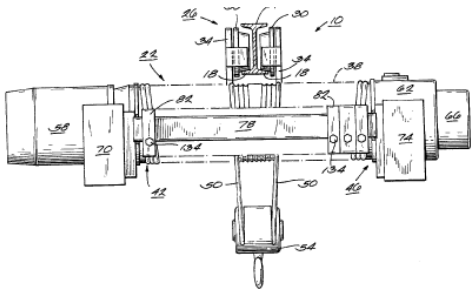

## References

### *Informative references*

*Attention is drawn to the following places, which may be of interest for search:*

| | |
|---|---|
| Features of lifting arrangement | B66D 3/18 |

# B66C 11/08

## with turntables

## Definition statement

*This place covers:*

See for example US 3 887 080

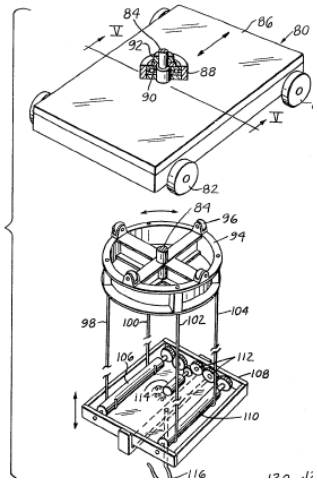

# B66C 11/10

## equipped with jibs (jib-cranes B66C 23/00)

### Definition statement

*This place covers:*

See for example EP 1 288 156

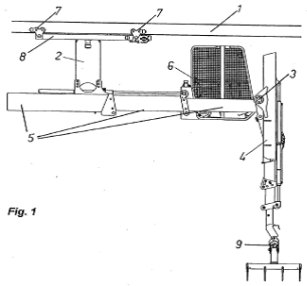


# B66C 11/12

## having hoisting gear adapted to special load-engaging elements and not otherwise provided for

### Definition statement

*This place covers:*

For example devices using counterweights.

See for example US2003/0019828

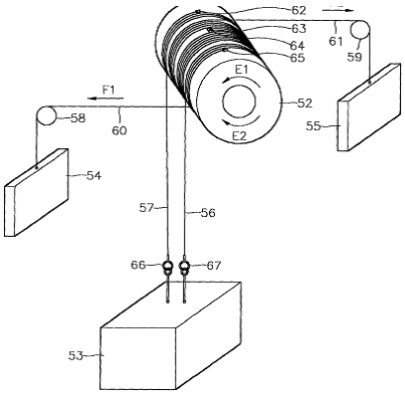


### References

#### *Limiting references*

*This place does not cover:*

| | |
|---|---|
| Elevators with counterweights | B66B |

## B66C 11/14

### adapted to operate on crane or bridge structure of particular configuration, e.g. on reinforced concrete girders of rectangular cross-section

#### Definition statement

*This place covers:*

See for example US 2011/0006026

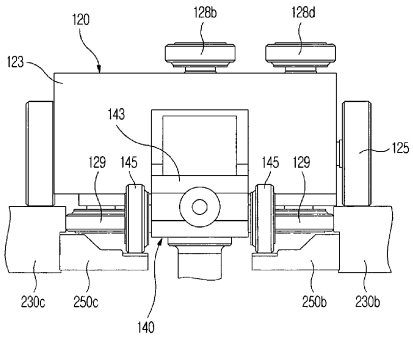


## B66C 11/16

### Rope, cable, or chain drives for trolleys; Combinations of such drives with hoisting gear

#### Definition statement

*This place covers:*

See for example US 6 250 486

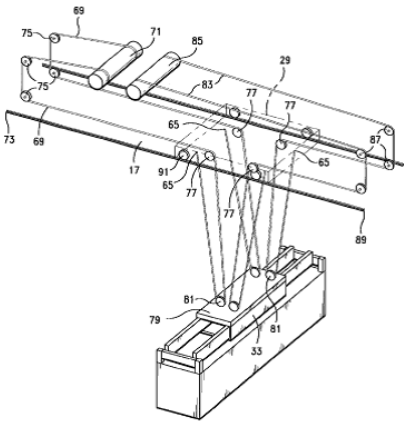

#### References

##### *Limiting references*

*This place does not cover:*

| | |
|---|---|
| Drives for running gear, e.g. wheels | B66C 9/14 |

## B66C 11/18

**comprising endless ropes or cables**

### Definition statement

*This place covers:*

See for example US 5 765 981

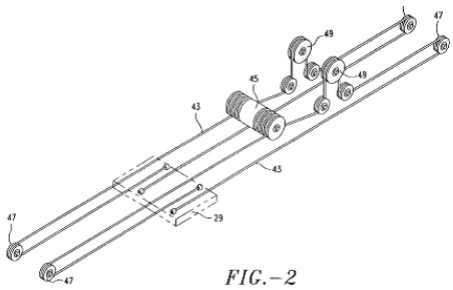

FIG.-2

## B66C 11/20

**Arrangements, e.g. comprising differential gears, enabling simultaneous or selective operation of travelling and hoisting gear; Arrangements using the same rope or cable for both travelling and hoisting, e.g. in Temperley cranes (power transmissions between driving motors and winch drums B66D 1/14)**

### Definition statement

*This place covers:*

See for example US 6 343 702

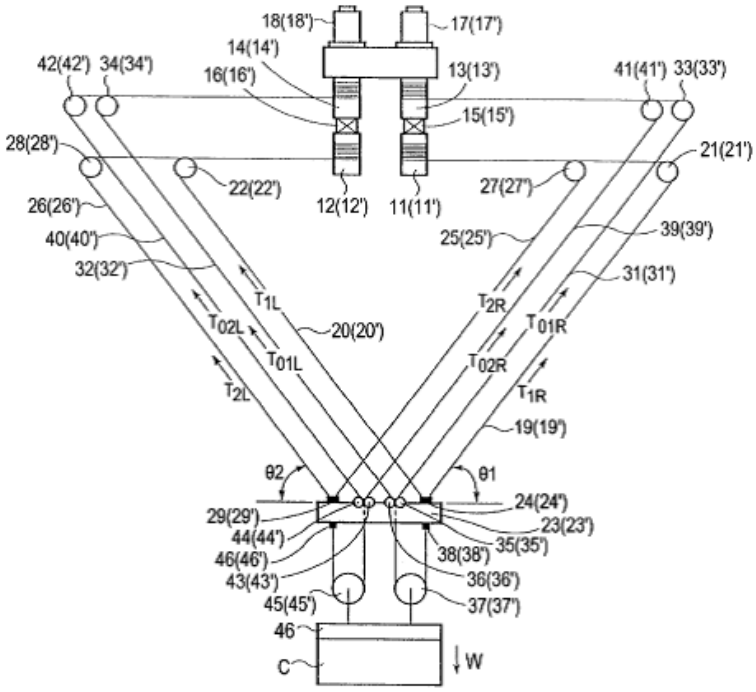

## B66C 11/22

### actuated pneumatically or hydraulically

#### Definition statement

*This place covers:*

See for example EP 0 081 935

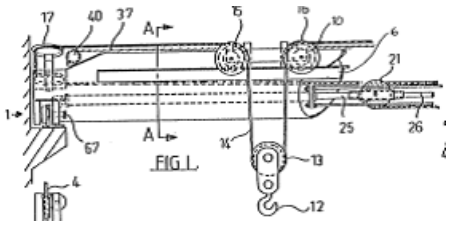


## B66C 11/24

### with means for locating or sustaining the loads or trolleys in predetermined positions; Hay hoists

#### Definition statement

*This place covers:*

See for example EP 0 063 724

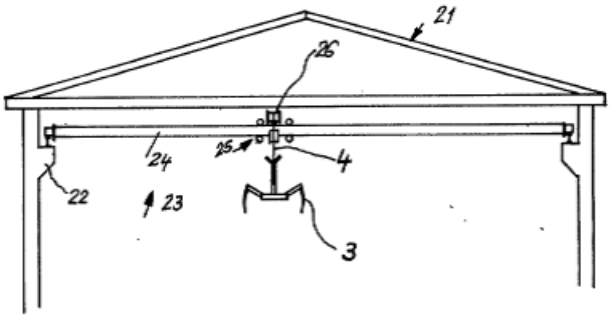


## B66C 11/26

### Abutments; Stop blocks; End stops

#### Definition statement

*This place covers:*

See for example DE 84 16 063 U1

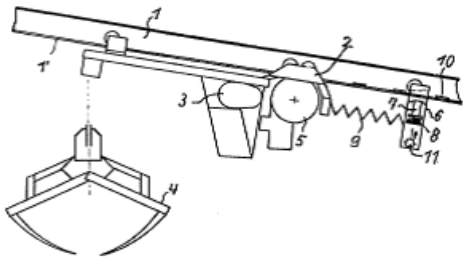

## B66C 13/005

### {Cranes carrying advertisements or the like}

### Definition statement

*This place covers:*

See for example WO 97/34282

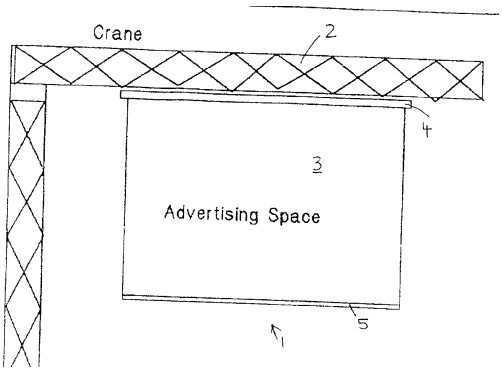


## B66C 13/02

### Devices for facilitating retrieval of floating objects, e.g. for recovering crafts from water (handling live-boats B63B; salvaging, or hauling-out on slipways, waterborne vessels B63C; winding mechanism controls B66D 1/52)

### Definition statement

*This place covers:*

See for example WO2009/038468

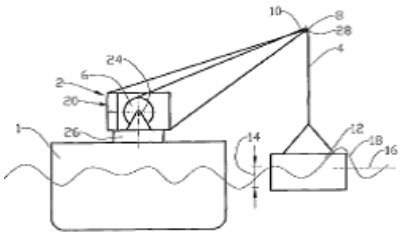

### References

#### *Limiting references*

*This place does not cover:*

| | |
|---|---|
| Winch controls for swell compensation | B66D 1/52 |

# B66C 13/04

## Auxiliary devices for controlling movements of suspended loads, or preventing cable slack

### Definition statement

*This place covers:*

Controlling vertical load movements.

See for example US 4 930 828

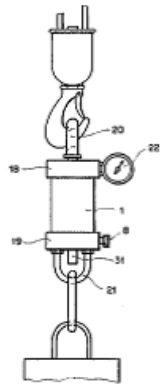

### References

#### *Limiting references*

*This place does not cover:*

| | |
|---|---|
| Controlling horizontal movements | B66C 13/06 |

# B66C 13/06

## for minimising or preventing longitudinal or transverse swinging of loads

### Definition statement

*This place covers:*

Mechanical sway compensation systems.

See for example US 2007/0158290

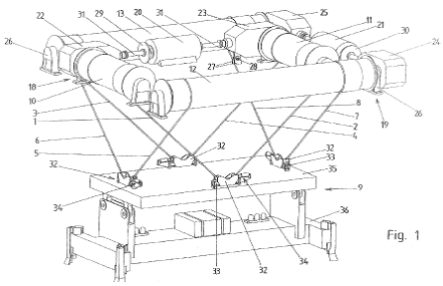

## References

### *Limiting references*

*This place does not cover:*

| | |
|---|---|
| Reducing vertical load oscillation | B66C 13/04 |
| Ensuring correct final load position | B66C 13/08 |

# B66C 13/063

## {electrical}

## Definition statement

*This place covers:*

Electrical sway compensation systems.

See for example US 2010/0094464

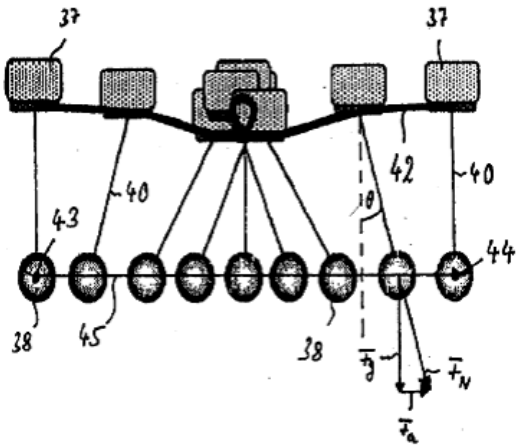


# B66C 13/066

## {for minimising vibration of a boom}

## Definition statement

*This place covers:*

See for example EP 1 174 384

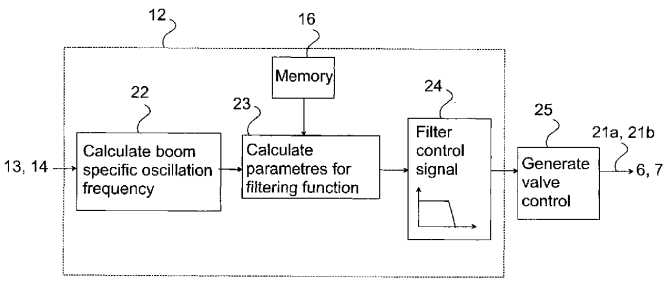

# B66C 13/08

## for depositing loads in desired attitudes or positions

### Definition statement

*This place covers:*

Mechanical arrangements for accurate final load position or orientation.

See for example US2007/0284327

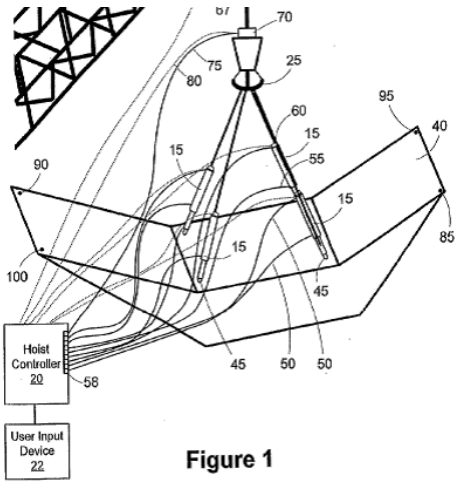


Figure 1

### References

#### *Limiting references*

*This place does not cover:*

| | |
|---|---|
| Anti-sway systems | B66C 13/06 |

# B66C 13/085

## {electrical}

### Definition statement

*This place covers:*

Electrical arrangements for accurate final load position or orientation.

See for example US2005/0232733

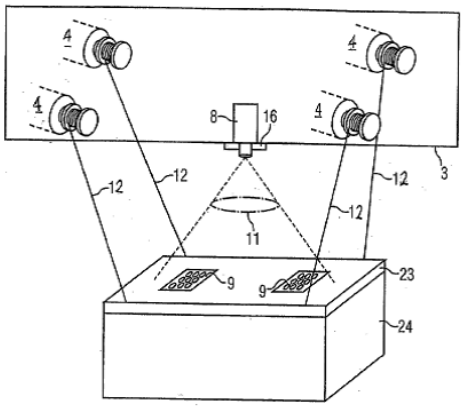


## References

### *Limiting references*

*This place does not cover:*

| | |
|---|---|
| Anti-sway systems | B66C 13/063 |

# B66C 13/10

## for preventing cable slack (control devices for rope, cable, or chain winding mechanisms, e.g. for controlling tensions, B66D 1/40)

## Definition statement

*This place covers:*

Devices to prevent cable from hanging loose, i.e. with no tension, by supporting or applying tension.

See for example US 2005/0218100

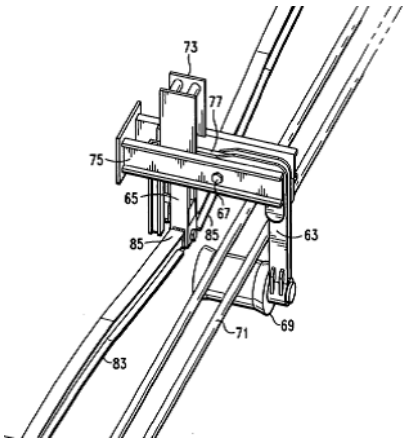


## References

### *Limiting references*

*This place does not cover:*

| | |
|---|---|
| Anti-slack devices for winches | B66D 1/50 |

# B66C 13/105

## {electrical}

### Definition statement

*This place covers:*

Anti-slack devices using electrical control, e.g. limit switches or tension measurement.

See for example US 4 487 741

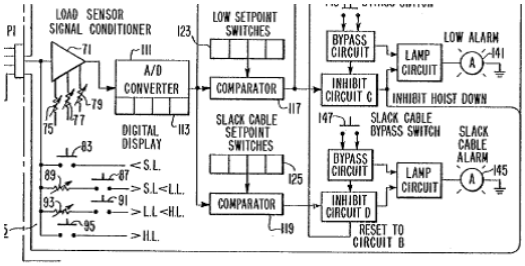


### References

#### *Limiting references*

*This place does not cover:*

| | |
|---|---|
| Anti-slack devices for winches | B66D 1/505 |

# B66C 13/12

## Arrangements of means for transmitting pneumatic, hydraulic, or electric power to movable parts of devices

### Definition statement

*This place covers:*

Cable or hose arrangements.

See for example US 5 294 066

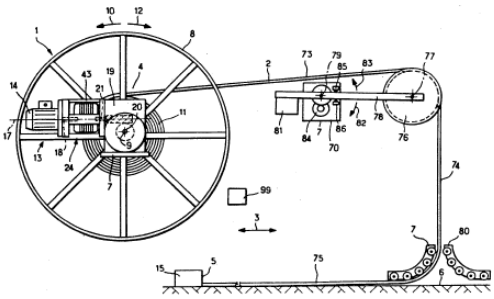

## B66C 13/14

### to load-engaging elements or motors associated therewith

### Definition statement

*This place covers:*

Energy supply to load engaging elements, including local energy generation devices.

See for example US 5 280 880

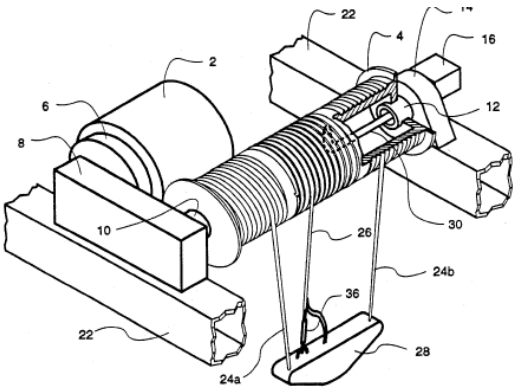


## B66C 13/16

### Applications of indicating, registering, or weighing devices (in crane hooks B66C 1/40; in safety gear B66C 15/00; weighing-apparatus G01G; remote indicating in general G08)

### Definition statement

*This place covers:*

Load measurement, either directly or indirectly, e.g. via motor torque.

See for example US 2011/0066394

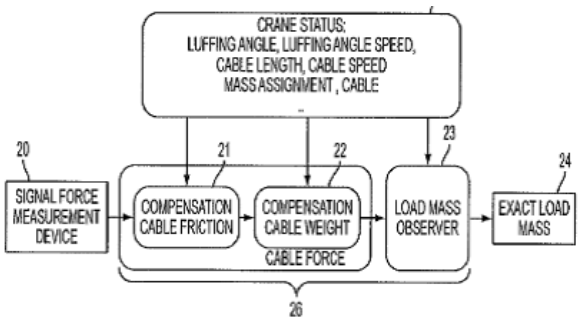


### References

#### *Limiting references*

*This place does not cover:*

| | |
|---|---|
| Load measurement on crane hook | B66C 1/40 |
| Load measurement in connection with safety control | B66C 15/00 |

## B66C 13/18

### Control systems or devices (exclusively for rope, cable, or chain winding mechanisms B66D 1/40)

#### Definition statement

*This place covers:*

General control arrangements not fitting one of the following subgroups.

See for example US 6 269 635

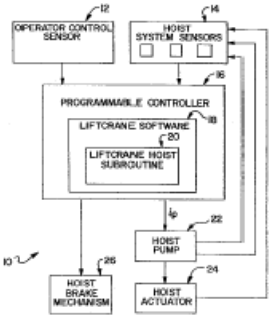


## B66C 13/20

### for non-electric drives (transmitting control pulses B66C 13/40)

#### Definition statement

*This place covers:*

Hydraulic or mechanical control devices.

See for example US 5 732 835

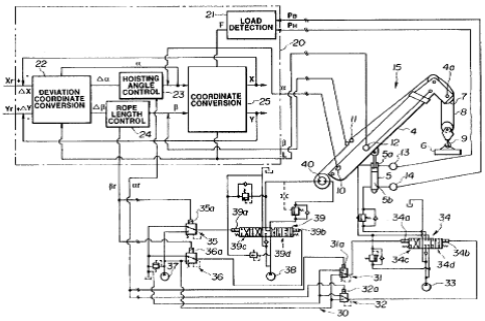

# B66C 13/22

## for electric drives (transmitting control pulses B66C 13/40; systems or devices of general application H02P)

### Definition statement

*This place covers:*

See for example US 4 614 274

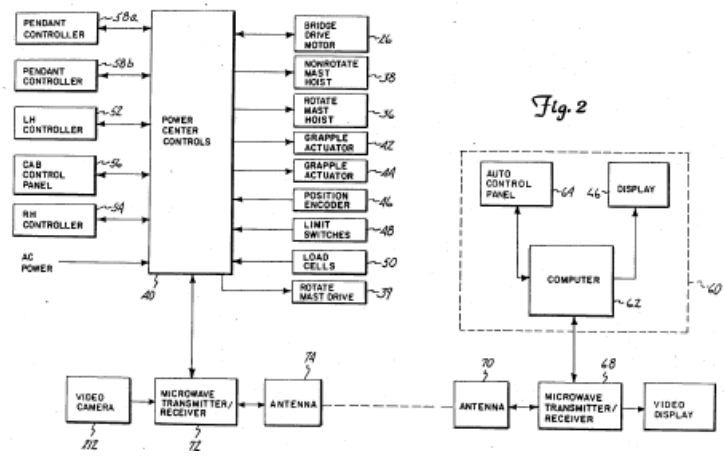


### References

#### *Limiting references*

*This place does not cover:*

| | |
|---|---|
| Controls for load lifting and lowering | B66C 13/23 |
| Circuits for horizontal motion | B66C 13/30 |

# B66C 13/23

## Circuits for controlling the lowering of the load

### Definition statement

*This place covers:*

Control of crane lowering and lifting drives.

See for example US 2011/0130863

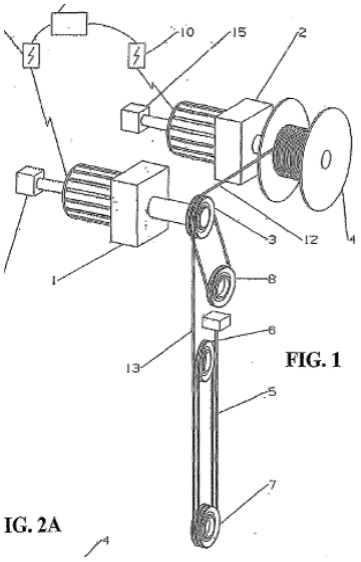


## References

### *Limiting references*

*This place does not cover:*

| | |
|---|---|
| Control drives for winches | B66D 1/40 |

# B66C 13/28

## utilising regenerative braking for controlling descent of heavy loads and having means for preventing rotation of motor in the hoisting direction when load is released

## Definition statement

*This place covers:*

Crane drives with regeneration of energy when lowering.

See for example US 5 936 375

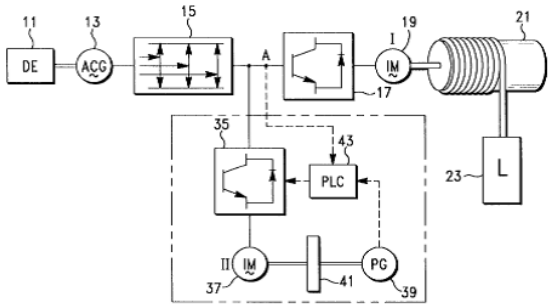

## B66C 13/30

### Circuits for braking, traversing, or slewing motors

#### Definition statement

*This place covers:*

Circuits for horizontal motion control.

See for example US 5 751 126

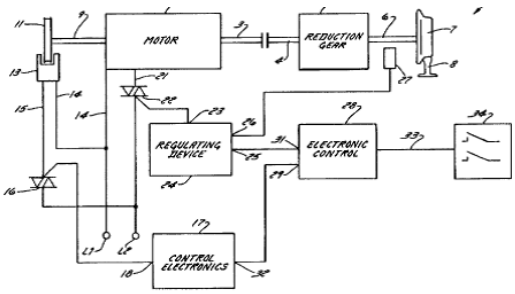


## B66C 13/32

### for operating grab bucket hoists by means of one or more electric motors used both for hosting and lowering the loads and for opening and closing the bucket jaws (other aspects or rope, cable, or chain winding mechanisms specially adapted for actuating grab buckets B66D 1/62)

#### Definition statement

*This place covers:*

See for example US4364704

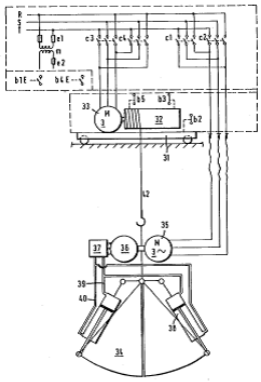

## B66C 13/40

### Applications of devices for transmitting control pulses; Applications of remote control devices (control in general G05)

#### Definition statement

*This place covers:*

Remote controls for cranes and winches, i.e. outside cabin, includes both hard wired and wireless units.

See for example US 2003/0164349

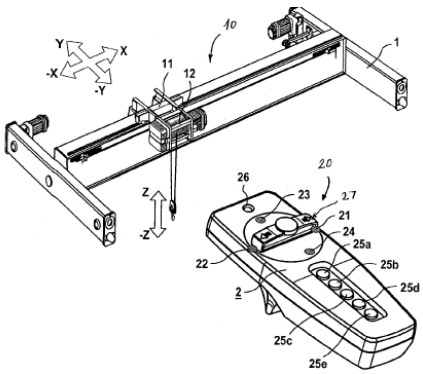


## References

### *Limiting references*

*This place does not cover:*

| | |
|---|---|
| Control devices inside crane cabin | B66C 13/56 |

# B66C 13/42

## Hydraulic transmitters

## Definition statement

*This place covers:*

Control arrangements using hydraulic signal transmission, e.g. between sensor and central unit.

# B66C 13/44

## Electrical transmitters

## Definition statement

*This place covers:*

Control arrangements using electric signal transmission, e.g. between sensor and central unit.

See for example US 2009/0250424

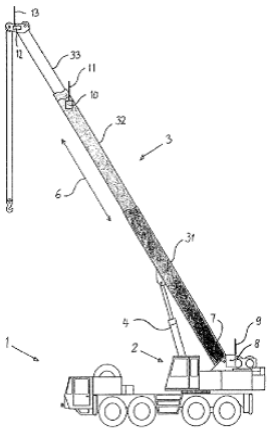

## References

### *Limiting references*

*This place does not cover:*

| | |
|---|---|
| Remote controls | B66C 13/40 |

# B66C 13/46

## Position indicators for suspended loads or for crane elements

## Definition statement

*This place covers:*

Sensors and cameras for detecting position of loads or parts of crane.

See for example US 2004/0015264

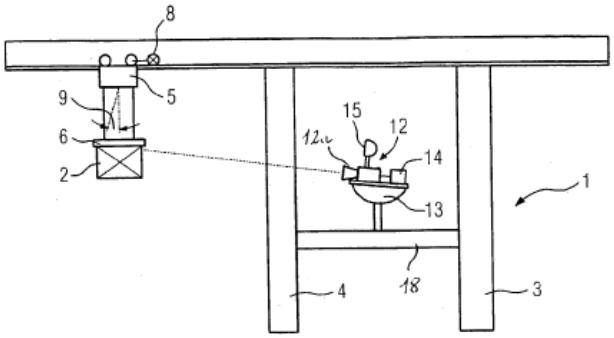


# B66C 13/48

## Automatic control of crane drives for producing a single or repeated working cycle; Programme control

## Definition statement

*This place covers:*

Systems allowing the crane to carry out an automatic movement, for example based on a program or target position, includes path planning and stack optimisation.

See for example US 6 065 619

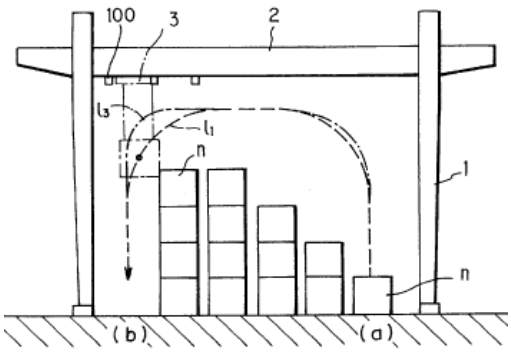

## B66C 13/50

### Applications of limit circuits or of limit-switch arrangements (for winding mechanisms B66D 1/56)

#### Definition statement

*This place covers:*

See for example US 2011/0089131

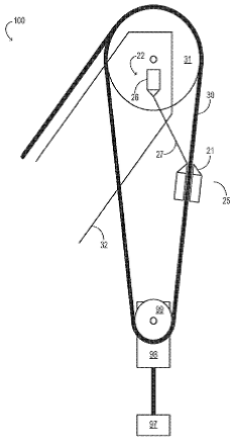

#### References

##### *Limiting references*

*This place does not cover:*

| | |
|---|---|
| Winches | B66D 1/56 |
| Portable lifting appliances | B66D 3/24 |

## B66C 13/52

### Details of compartments for driving engines or motors or of operator's stands or cabins

#### Definition statement

*This place covers:*

Engine and motor compartments.

See for example US 4 045 866

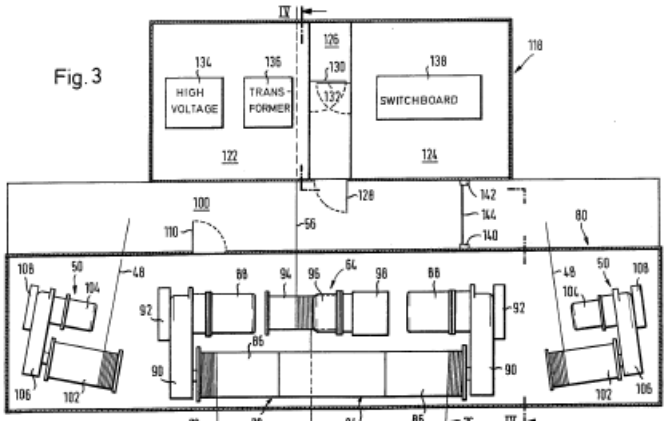


## References

### *Limiting references*

*This place does not cover:*

| | |
|---|---|
| Operator's compartments | B66C 13/54 |

# B66C 13/54

## Operator's stands or cabins

## Definition statement

*This place covers:*

Operator's compartments.

See for example EP 0 870 725

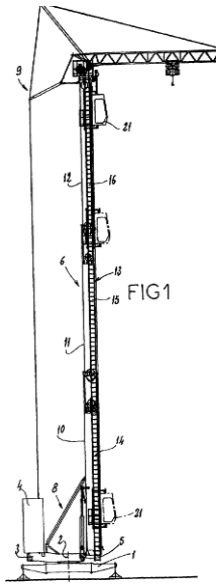

## References

### *Limiting references*

*This place does not cover:*

| | |
|---|---|
| Operating devices | B66C 13/56 |
| Operator's compartments for fork lift trucks | B66F 9/07545 |
| Operator's compartments for soil shifting machines | E02F 9/16 |

# B66C 13/56

## Arrangements of handles or pedals

## Definition statement

*This place covers:*

Control devices actuated by the operator.

See for example US 2007/0156280

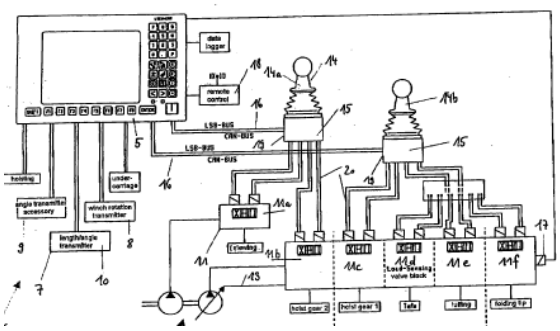

## References

### *Limiting references*

*This place does not cover:*

| | |
|---|---|
| Remote controls, i.e. outside cabin | B66C 13/40 |
| Controls for fork lift trucks | B66F 9/20 |
| Controls for excavators | E02F 9/20 |
| General control handles | G05G 9/00 |

# B66C 15/00

## Safety gear (for rope, cable, or chain winding mechanisms B66D 1/54)

## Definition statement

*This place covers:*

General crane safety devices not covered by one of the following subgroups

for example component testing.

US 4 643 031

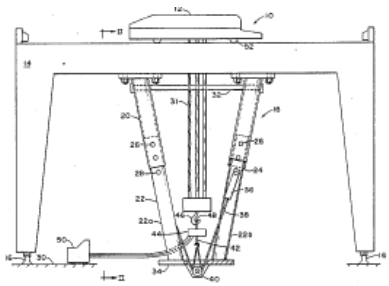

## References

### *Limiting references*

*This place does not cover:*

| | |
|---|---|
| Safety devices for boom cranes | B66C 23/88 |
| Safety devices for winches | B66D 1/54 |

# B66C 15/02

## for retaining load-engaging elements in the event of rope or cable breakage

## Definition statement

*This place covers:*

See for example US 5 735 507

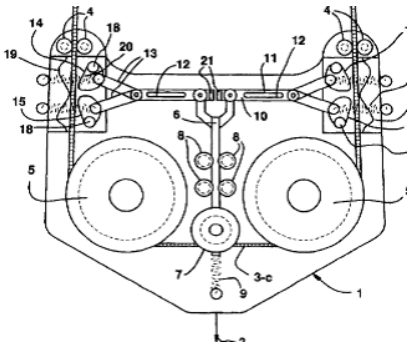

# B66C 15/04

## for preventing collisions, e.g. between cranes or trolleys operating on the same track

## Definition statement

*This place covers:*

See for example DE 10 2009 006 103

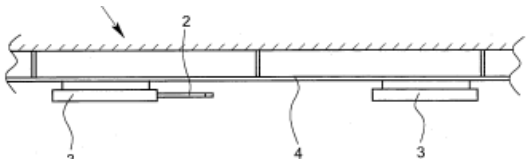

# B66C 15/045

## {electrical}

### Definition statement

*This place covers:*

Electrical anti-collision devices.

See for example US 3 167 753

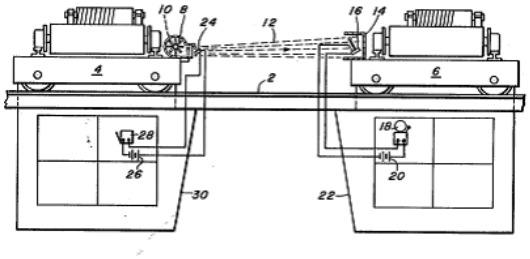


# B66C 15/06

## Arrangements or use of warning devices

### Definition statement

*This place covers:*

Non-electric devices, e.g. with visual indication

See for example US 2007/0205618

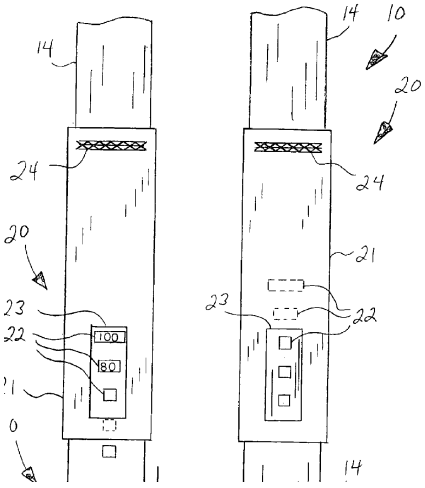

# B66C 15/065

## {electrical}

### Definition statement

*This place covers:*

See for example EP 1 221 426

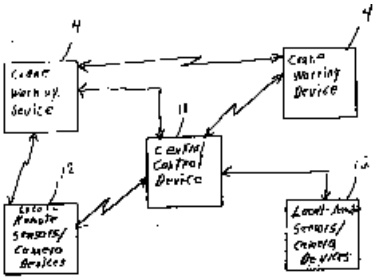

# B66C 17/04

## with lifting beams, e.g. slewable beams, carrying load-engaging elements, e.g. magnets, hooks (constructions of load-engaging elements B66C 1/00, B66C 3/00)

### Definition statement

*This place covers:*

Devices where the load carrying element is connected to the lifting beam, i.e. not suspended by cables.

See for example EP 0 314 632

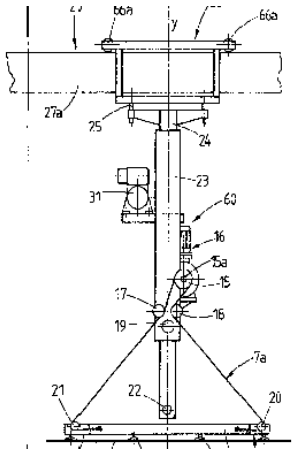

## B66C 17/06

### specially adapted for particular purposes, e.g. in foundries, forges; combined with auxiliary apparatus serving particular purposes (B66C 17/04 takes precedence)

#### Definition statement

*This place covers:*

Specially adapted devices, i.e. with particular mechanical features making them especially suitable for a particular application not covered by the following subgroups.

## B66C 17/08

### for charging treatment chambers, e.g. furnaces, kilns, ovens (charging furnaces in general F27D 3/00)

#### Definition statement

*This place covers:*

See for example EP 2 275 764

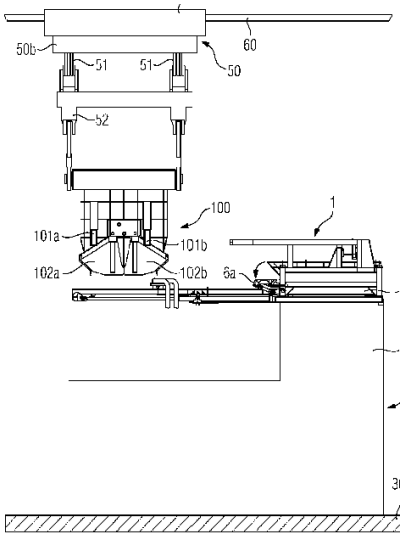

## B66C 17/10

**for transporting ladles**

### Definition statement

*This place covers:*

See for example US 3 874 513

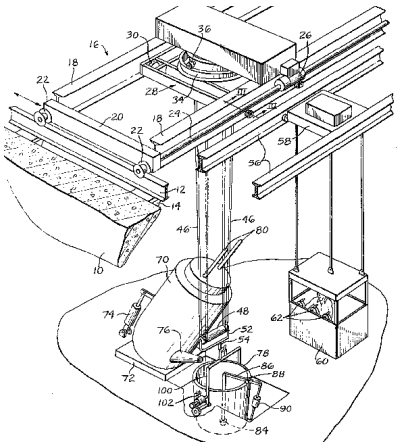

## B66C 17/12

**for handling workpieces, e.g. ingots, which require to be supported temporarily within, or withdrawn from, a treatment chamber, e.g. tong cranes, soaking-pit cranes, stripper cranes (for manipulating ingots during forging B66C 17/18; grippers for handling or stripping castings or ingots during manufacture B22D 29/00)**

### Definition statement

*This place covers:*

See for example US 4 736 971

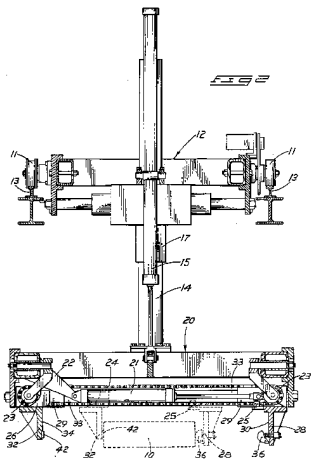

## B66C 17/14

### Tong cranes with means for moving article-pushers relative to the tongs

### Definition statement

*This place covers:*

See for example DE 1 181 866 B

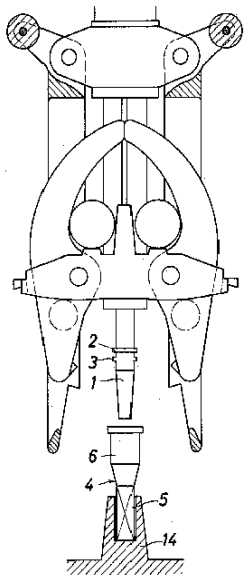


## B66C 17/16

### Tong cranes with means for turning the tongs about a vertical axis

### Definition statement

*This place covers:*

See for example DE 1 109 196 B

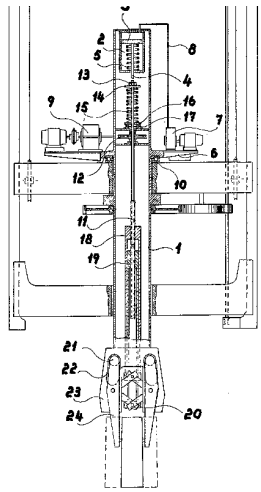

## B66C 17/18

### for manipulating workpieces during forging operations (work-pieces manipulators in forging machines B21J 13/10)

### Definition statement

*This place covers:*

See for example DE 35 08 195

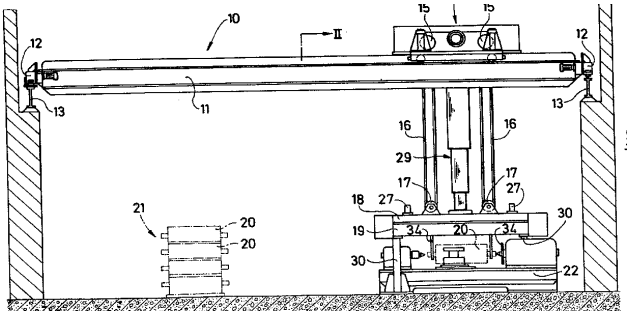


## B66C 17/20

### for hoisting or lowering heavy load carriers, e.g. freight containers, railway wagons

### Definition statement

*This place covers:*

See for example US 5 803 280

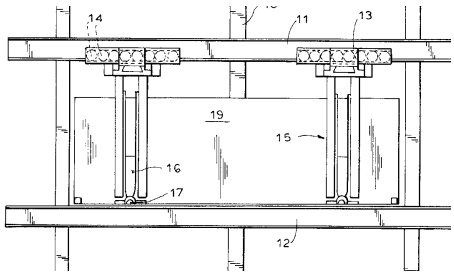


### References

#### *Limiting references*

*This place does not cover:*

| | |
|---|---|
| Gantry cranes or straddle carriers | B66C 19/00 |

## B66C 17/22

**for hoisting or lowering locomotives**

### Definition statement

*This place covers:*

See for example US 1 497 961

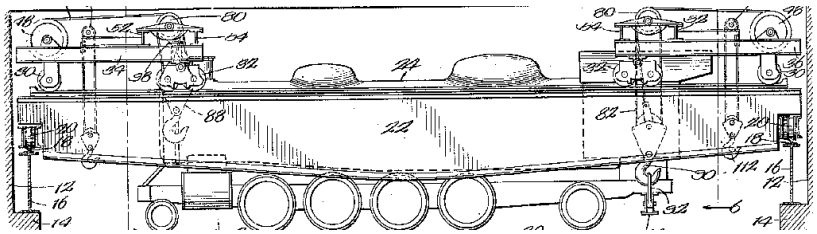

## B66C 17/26

**combined with auxiliary apparatus, e.g. log saws, pushers for unloading vehicles, means for shunting railway vehicles**

### Definition statement

*This place covers:*

See for example US 2011/0142590

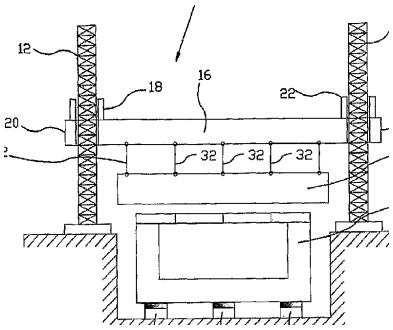


## B66C 19/00

**Cranes comprising trolleys or crabs running on fixed or movable bridges or gantries (B66C 17/00 takes precedence; base supporting structures with legs B66C 5/00; jib cranes B66C 23/00)**

### Definition statement

*This place covers:*

Gantry cranes not covered by the following subgroups.

See for example US 5 405 029

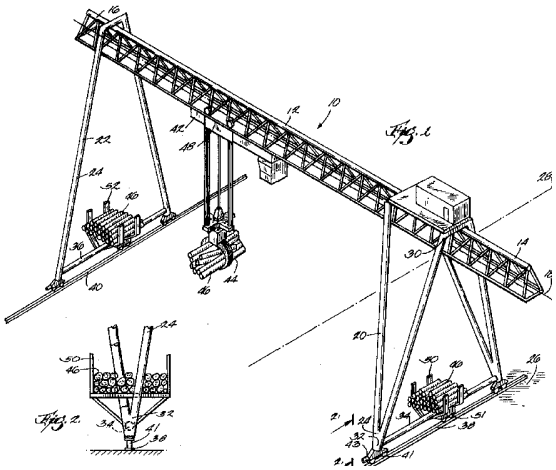

## B66C 19/002

### {Container cranes (B66C 19/007 takes precedence)}

### Definition statement

*This place covers:*

Gantry cranes for containers, i.e. static cranes or cranes with wheels which are static when handling loads.

See for example US 2009/0191028

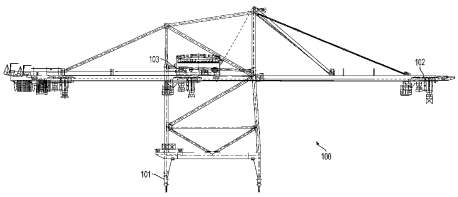

### References

#### *Limiting references*

*This place does not cover:*

| | |
|---|---|
| Straddle carriers for containers | B66C 19/007 |

## B66C 19/005

### {Straddle carriers (B66C 19/007 takes precedence)}

### Definition statement

*This place covers:*

Straddle carriers for loads other than containers, e.g. boats.

See for example US 5 893 471

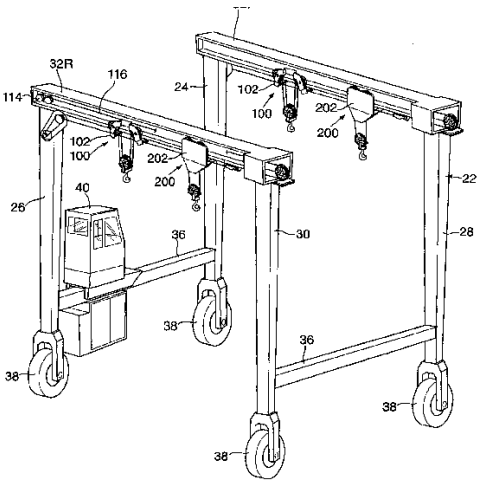


## References

### *Limiting references*

*This place does not cover:*

| | |
|---|---|
| Straddle carriers for containers | B66C 19/007 |

# B66C 19/007

## {for containers}

## Definition statement

*This place covers:*

Straddle carriers for containers, i.e. wheeled devices which carry containers around ports.

See for example EP 1 829 810

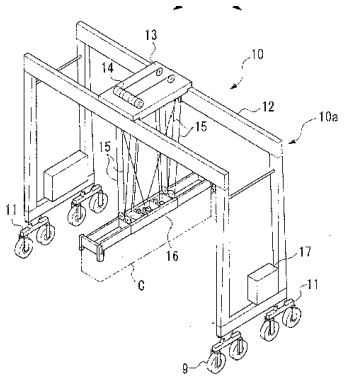


## References

### *Limiting references*

*This place does not cover:*

| | |
|---|---|
| Gantry cranes for containers | B66C 19/002 |

## B66C 19/02

**collapsible {(B66C 19/002, B66C 19/005 takes precedence)}**

### Definition statement

*This place covers:*

Easily dismantlable gantry cranes.

See for example US2007/0163982

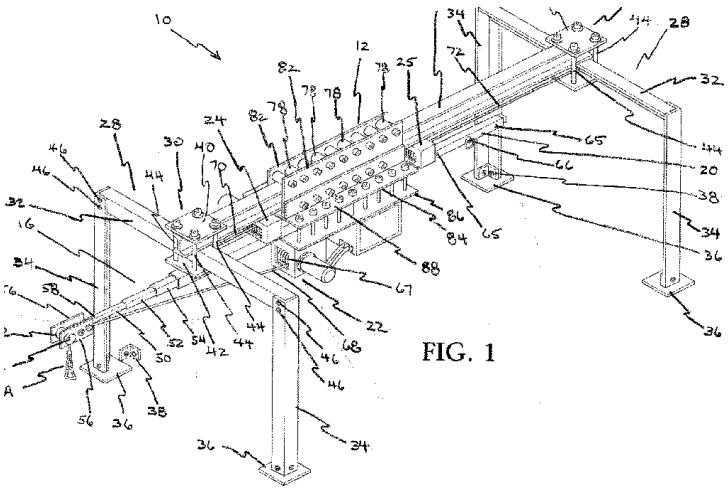

FIG. 1

## B66C 21/00

**Cable cranes, i.e. comprising hoisting devices running on aerial cable-ways (rope or cable drives for trolleys, combinations of such drives with hoisting gear B66C 11/16; railway systems B61B; rope or cable winding mechanisms B66D 1/00)**

### Definition statement

*This place covers:*

Devices not falling into one of the following subgroups.

See for example US 7 234 605

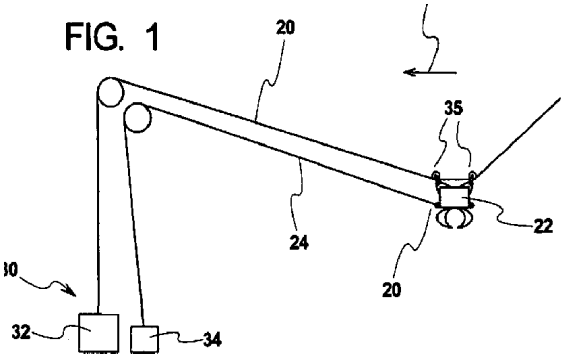

## B66C 21/02

### with cable-ways supported on framework swingably connected to groundengaging elements

### Definition statement

*This place covers:*

Cable cranes where one support for the end of the cable is pivotable.

See for example GB 130 008

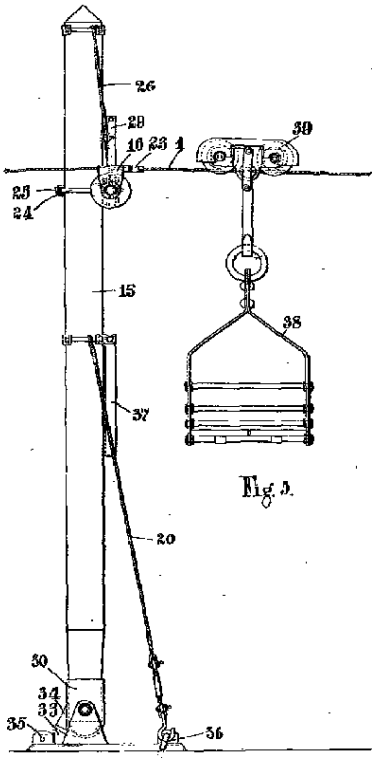


## B66C 21/04

### with cable-ways supported at one end or both ends on bodily movable framework, e.g. framework mounted on rail track

### Definition statement

*This place covers:*

Cable cranes where one end of the cable is not fixed.

See for example US 5 816 636

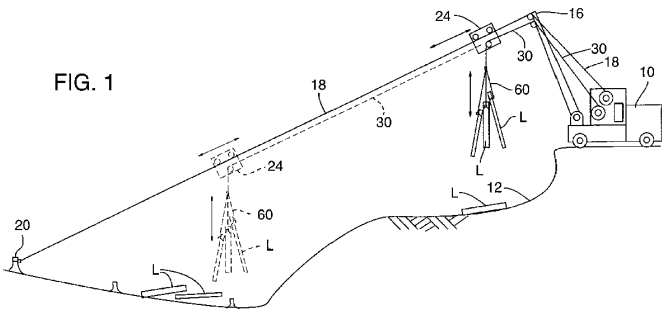


## B66C 21/06

### with one end supported on a framework movable in a curved, e.g. circular, path and the other end by a column rotatable around a vertical axis

### Definition statement

*This place covers:*

See for example DE 30 37 894

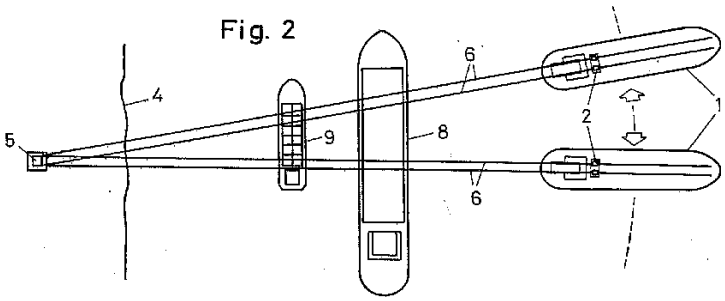


## B66C 21/08

### Sag carriers or rope trolleys, suspended or not, e.g. fixed but offering clearance for travelling gear

### Definition statement

*This place covers:*

Arrangements for supporting cables.

See for example US 4 355 727

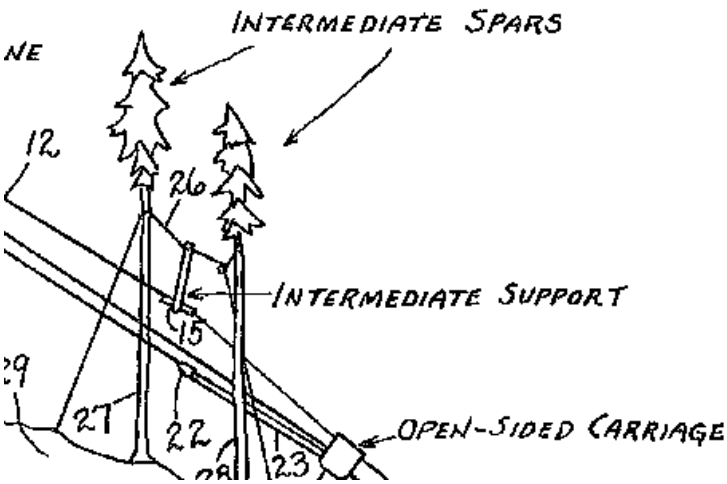


## B66C 21/10

**travelling**

### Definition statement

*This place covers:*

Supports which are movable along the cable.

See for example GB 374 921

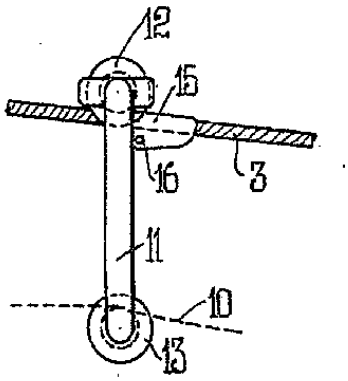


## B66C 23/00

**Cranes comprising essentially a beam, boom, or triangular structure acting as a cantilever and mounted for translatory of swinging movements in vertical or horizontal planes or a combination of such movements, e.g. jib-cranes, derricks, tower cranes (base supporting structures with legs B65C 5/00)**

### Special rules of classification

Stationary cranes are classified in B66C 23/00 - B66C 23/24.

Tower type cranes (which may be mobile) are classified in B66C 23/26 - B66C 23/34.

Mobile cranes are classified in B66C 23/36 and later subgroups.

Groups B66C 23/54 onwards apply to all types of crane.

## B66C 23/005

### {with balanced jib, e.g. pantograph arrangement, the jib being moved manually}

### Definition statement

*This place covers:*

See for example US 5 203 837

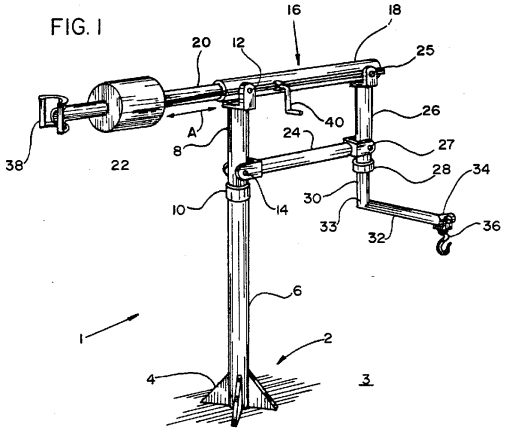


## B66C 23/02

### with non-adjustable and non-inclinable jibs mounted solely for slewing movements

### Definition statement

*This place covers:*

Jib cranes with a fixed vertical column mounted on the ground as the sole support, with a jib mounted for slewing at the top of the column, i.e. the column does not rotate and the inclination of the jib can not be altered.

### References

#### *Limiting references*

*This place does not cover:*

| | |
|---|---|
| Jib cranes where the column also rotates or the jib inclination can be altered | B66C 23/16 |
| Jib cranes which are supported by other means, e.g. additional support from a building | B66C 23/20 |
| Mobile cranes | B66C 23/36 |
| Vehicle mounted cranes | B66C 23/44 |
| Small cranes on wheels | B66C 23/48 |

### Special rules of classification

This group is only used if the following subgroups are not applicable. Documents may be classified in more than one subgroup.

## B66C 23/022

### {Pivot axis common with column}

### Definition statement

*This place covers:*

Jibs pivoting around the centre of the column.

See for example WO 2009/003554

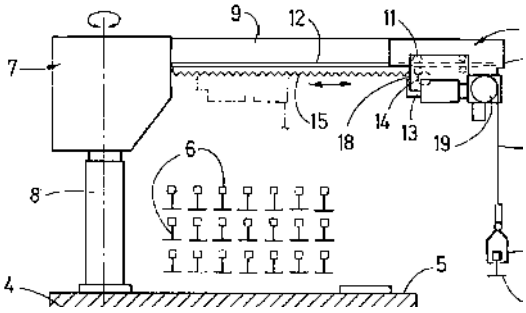


## B66C 23/025

### {with particular mounting for base of column}

### Definition statement

*This place covers:*

See for example EP 1 460 024

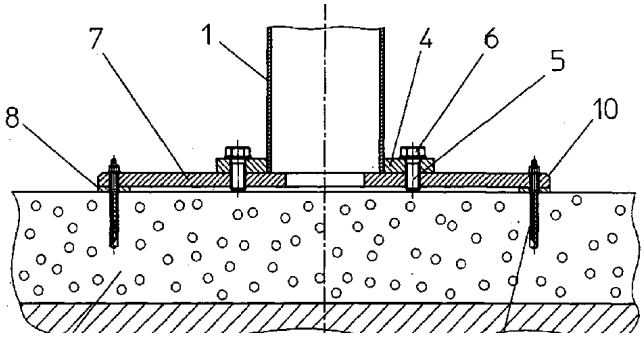


## B66C 23/027

### {Pivot axis separated from column axis}

### Definition statement

*This place covers:*

Jibs whose pivot is not in line with the axis of the column.

See for example US 6 367 855

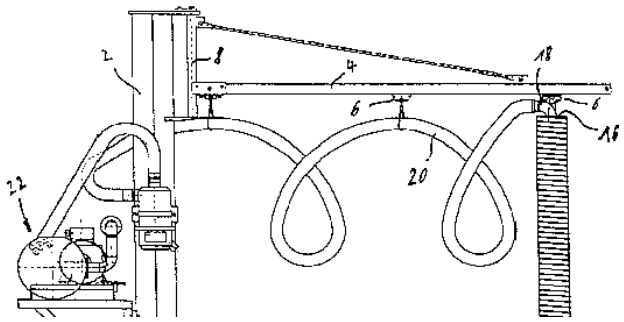

## B66C 23/04

### with jibs the effective length of which is variable in operation, e.g. longitudinally displaceable, extensible

### Definition statement

*This place covers:*

See for example US 5 509 638

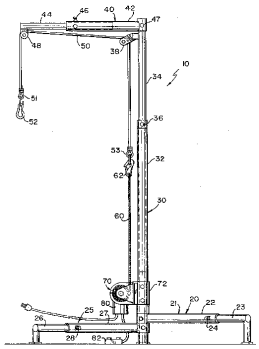

### References

#### *Limiting references*

*This place does not cover:*

| | |
|---|---|
| Telescopic booms e.g. for mobile cranes | B66C 23/701 |

## B66C 23/06

### with jibs mounted for jibbing or luffing movements

### Definition statement

*This place covers:*

Fixed cranes with luffing jibs not covered by one of the subgroups B66C 23/08 - B66C 23/14.

## References

### *Limiting references*

*This place does not cover:*

| | |
|---|---|
| Column mounted luffing jibs | B66C 23/16 |
| Derricks | B66C 23/60 |
| Luffing mechanisms | B66C 23/82 |

# B66C 23/08

## and adapted to move the loads in predetermined paths

## Definition statement

*This place covers:*

Mechanical arrangements for following a particular non-horizontal path.

See for example DE 44 15 029

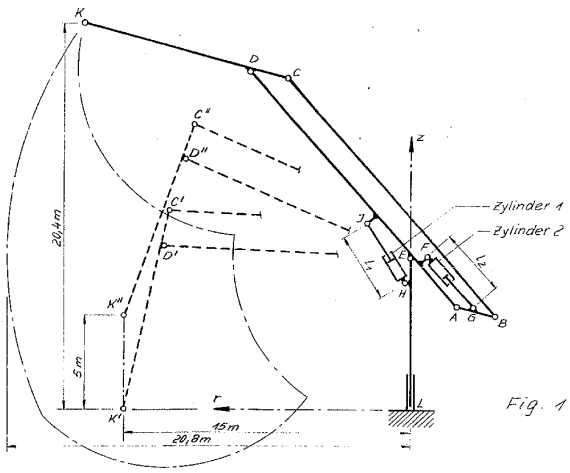


## References

### *Limiting references*

*This place does not cover:*

| | |
|---|---|
| Control devices for particular paths | B66C 13/48 |

## B66C 23/10

### the paths being substantially horizontal; Level-luffing jib-cranes

### Definition statement

*This place covers:*

See for example US 3 884 359

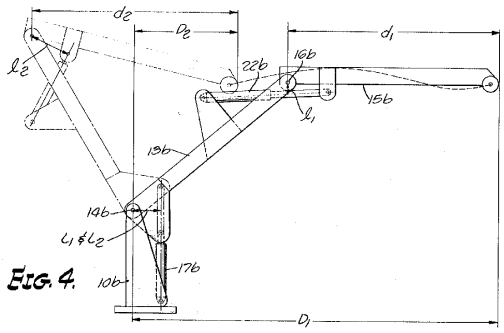


## B66C 23/12

### with means for automatically varying the effective length of the hoisting rope or cable

### Definition statement

*This place covers:*

See for example GB 1 392 223

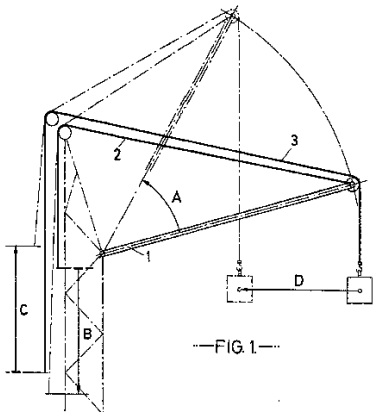

## B66C 23/14

### with means, e.g. pantograph arrangements, for varying jib configuration

### Definition statement

*This place covers:*

See for example GB 985 801

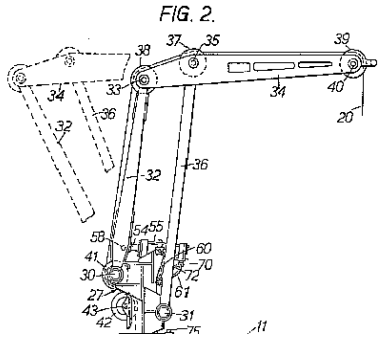


## B66C 23/16

### with jibs supported by columns, e.g. towers having their lower end mounted for slewing movements

### Definition statement

*This place covers:*

Jib cranes with a fixed vertical column mounted on the ground as the sole support, includes cranes with a jib mounted for slewing at the centre or bottom of the column, i.e. at least part of the column rotates. the jib may or may not be inclinable.

See for example US 3 358 849

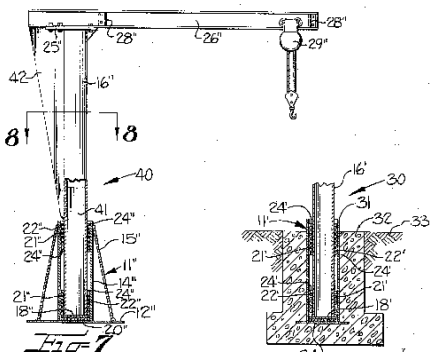

### References

#### *Limiting references*

*This place does not cover:*

| | |
|---|---|
| Jib cranes with a jib mounted for slewing at the top of the column, i.e. the column does not rotate and the inclination of the jib can not be altered. | B66C 23/02 |
| Jib cranes which are supported by other means, e.g. additional support from a building | B66C 23/20 |
| Vehicle mounted cranes | B66C 23/44 |

| | |
|---|---|
| Small cranes on wheels | B66C 23/48 |
| Derrick cranes | B66C 23/60 |

## B66C 23/163

### {where only part of the column rotates, i.e. at least the bottom part is fixed}

### Definition statement

*This place covers:*

See for example US 3 181 707

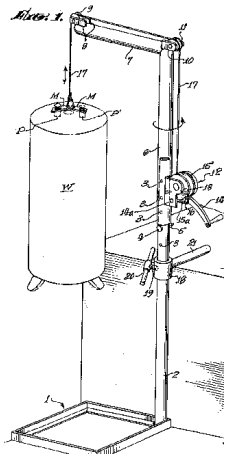

### References

#### *Limiting references*

*This place does not cover:*

| | |
|---|---|
| Cranes where all the column is fixed | B66C 23/02 |

## B66C 23/166

### {Simple cranes with jibs which may be fixed or can slew or luff}

### Definition statement

*This place covers:*

Small cranes without wheels.

See for example US 2005/0161422

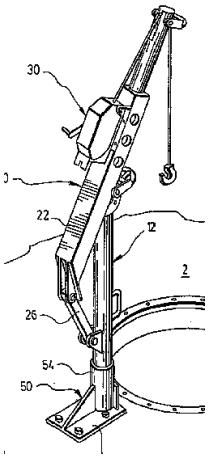


# B66C 23/18

## specially adapted for use in particular purposes

### Definition statement

*This place covers:*

Cranes with jibs for specific applications not covered by the following groups B66C 23/20 - B66C 23/52.

See for example US 2001/0051074

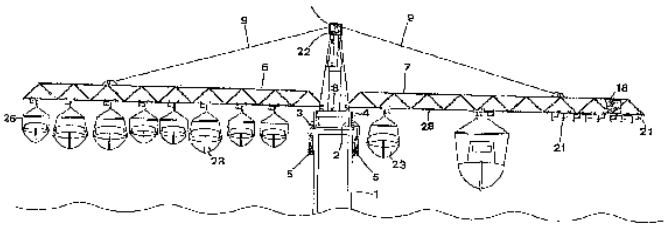

# B66C 23/185

## {for use erecting wind turbines (B66C 23/207 takes precedence)}

### Definition statement

*This place covers:*

See for example US 2005/0211653

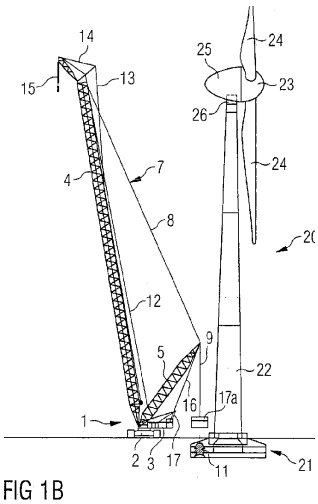


FIG 1B

### References

#### *Limiting references*

*This place does not cover:*

| | |
|---|---|
| Load connecting element for lifting wind turbines | B66C 1/108 |
| Cranes supported on or by wind turbines | B66C 23/207 |

# B66C 23/20

## with supporting couples provided by walls of buildings or like structures

### Definition statement

*This place covers:*

Jib cranes which are not supported only by a simple foot on the ground, but (also) by other means, e.g. additional support from a building, which do not fit one of the following subgroups.

### References

#### *Limiting references*

*This place does not cover:*

| | |
|---|---|
| Vehicle mounted cranes | B66C 23/44 |
| Small cranes on wheels | B66C 23/48 |

## B66C 23/201

### {with supporting couples provided from above, e.g. by ceilings of buildings}

### Definition statement

*This place covers:*

Supported either from only above or from both above and below.

See for example US 4 096 952

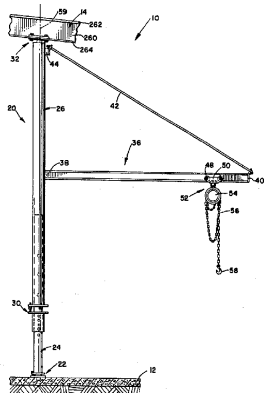

### References

#### *Limiting references*

*This place does not cover:*

| | |
|---|---|
| Cranes supported in window openings | B66C 23/22 |

## B66C 23/202

### {with supporting couples provided from below, e.g. by floors of buildings}

### Definition statement

*This place covers:*

Cranes supported only from below, but requiring extra support, i.e. not merely mounted by a simple crane foot.

See for example US 2 382 299

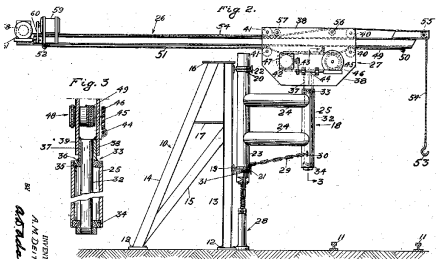

## References

### *Limiting references*

*This place does not cover:*

| | |
|---|---|
| Cranes supported both from below and above | B66C 23/201 |

# B66C 23/203

## {with supporting couples provided by posts, e.g. scaffolding, trees or masts}

## Definition statement

*This place covers:*

See for example US 4 880 345

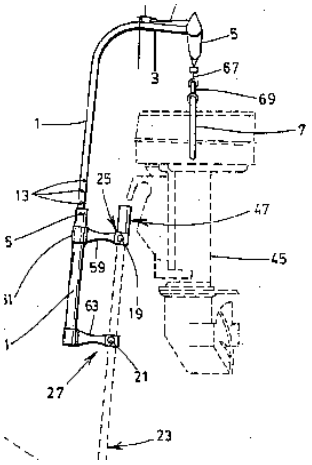


## References

### *Limiting references*

*This place does not cover:*

| | |
|---|---|
| Cranes attached to wind turbines | B66C 23/207 |

## B66C 23/205

### {for use on top of roofs}

### Definition statement

*This place covers:*

See for example US 3 671 015

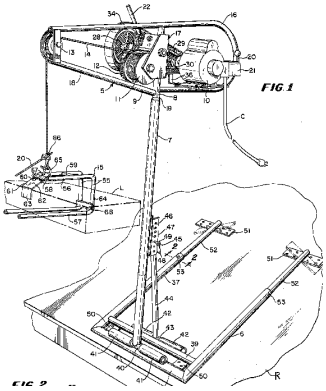


## B66C 23/206

### {with supporting couples provided by iso containers}

### Definition statement

*This place covers:*

Cranes mounted on or in containers

See for example EP 2 196 427

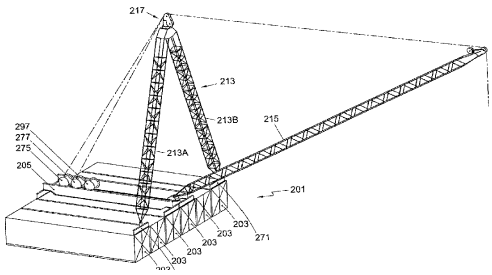


## B66C 23/207

### {with supporting couples provided by wind turbines}

### Definition statement

*This place covers:*

Mounted on or supported by wind turbines or for erecting wind turbines.

See for example EP1 677 007

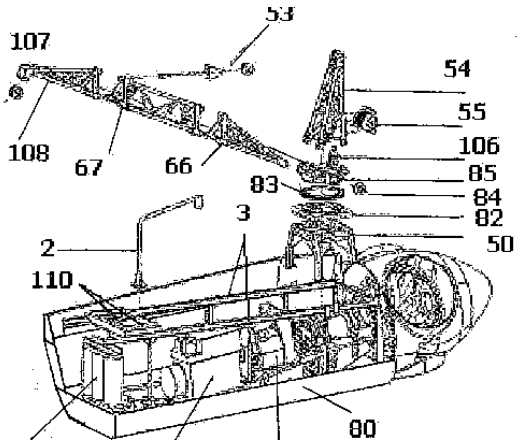


## References

### *Limiting references*

*This place does not cover:*

| | |
|---|---|
| Load connecting element for lifting wind turbines | B66C 1/108 |
| Cranes not supported by the wind turbine | B66C 23/185 |

# B66C 23/208

## {with supporting couples provided from the side, e.g. by walls of buildings}

## Definition statement

*This place covers:*

Cranes fixed to walls, i.e. which do not move relative to the wall.

See for example GB 2 037 701

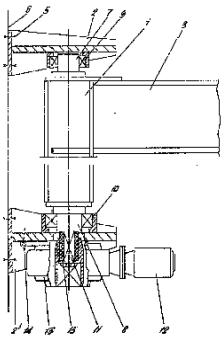

## References

### *Limiting references*

*This place does not cover:*

| | |
|---|---|
| Cranes which can run along walls | B66C 23/24 |

# B66C 23/22

## Window cranes, i.e. adapted to be supported in window openings

### Definition statement

*This place covers:*

See for example US 2008/0035594

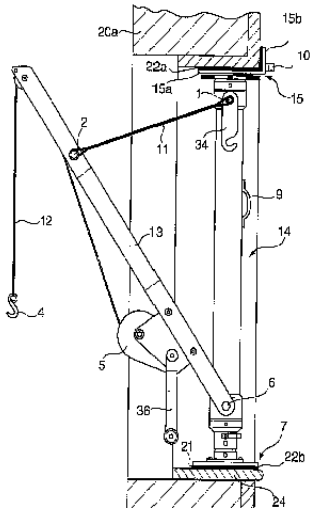


# B66C 23/24

## Mobile wall cranes

### Definition statement

*This place covers:*

Cranes with a jib which runs along a wall.

See for example US 3 050 195

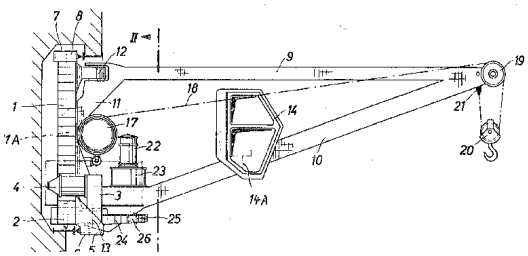


### References

#### *Limiting references*

*This place does not cover:*

| | |
|---|---|
| Cranes fixed to walls, i.e. which do not move relative to the wall | B66C 23/208 |

## B66C 23/26

**for use on building sites; constructed, e.g. with separable parts, to facilitate rapid assembly or dismantling, for operation at successively higher levels, for transport by road or rail (with supporting couples provided by walls or buildings B66C 23/20; mounted on vehicles B66C 23/36; jib constructions B66C 23/64)**

### Definition statement

*This place covers:*

Tower type cranes not fitting one of the subgroups B66C 23/28 - B66C 23/34.

See for example US 6 422 408

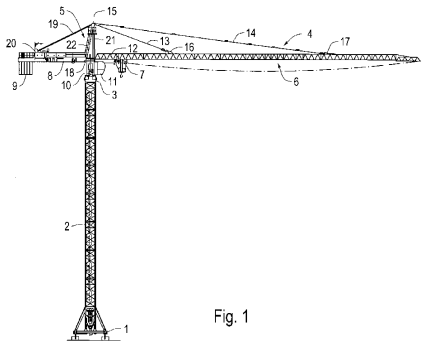

Fig. 1

## B66C 23/28

**constructed to operate at successively higher levels**

### Definition statement

*This place covers:*

Tower cranes where the jib does not have a fixed tower height relative to the ground and do not fit the following two subgroups.

### References

#### *Limiting references*

*This place does not cover:*

| | |
|---|---|
| Cranes where the tower is telescopic | B66C 23/30 |
| Cranes which climb | B66C 23/32 |

## B66C 23/283

**{with frameworks composed of assembled elements}**

### Definition statement

*This place covers:*

Cranes which have towers which can be extended by adding an extra section to the tower.

See for example US 4 028 792

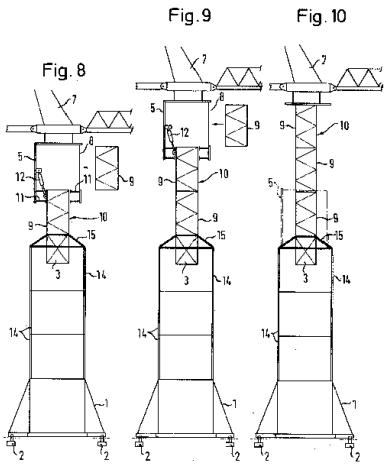


## B66C 23/286

### {with locking devices}

### Definition statement

*This place covers:*

See for example US 3 499 258

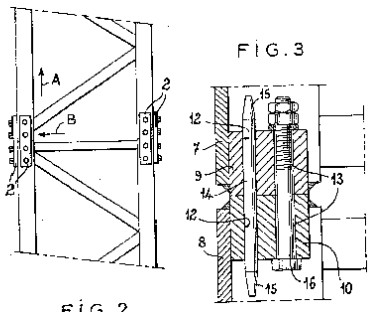


## B66C 23/30

### with frameworks composed of telescopic elements

### Definition statement

*This place covers:*

Cranes which have towers which can be extended by a telescoping section of the tower.

See for example US 4 196 814

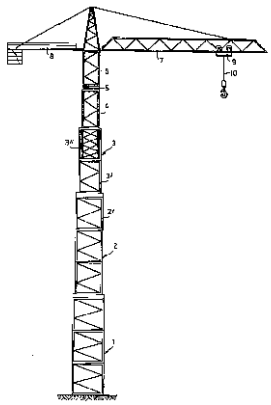

## B66C 23/305

### {with locking devices}

### Definition statement

*This place covers:*

See for example US 3 361 456

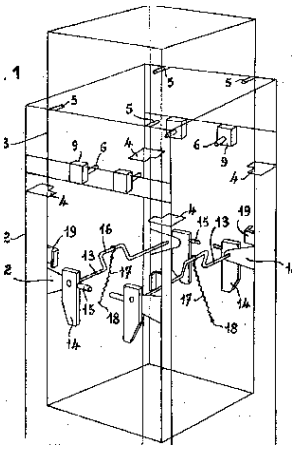

## B66C 23/32

### Self-hoisting cranes

### Definition statement

*This place covers:*

Cranes which can alter the height of the jib and top of tower by climbing up other structures.

See for example US 3 485 384

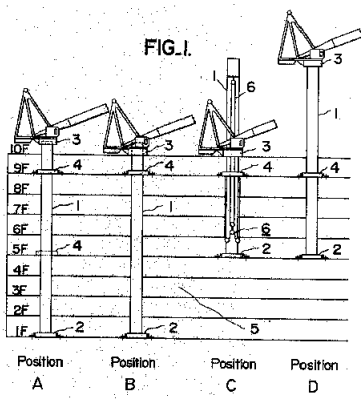


# B66C 23/34

## Self-erecting cranes, i.e. with hoisting gear adapted for crane erection purposes

### Definition statement

*This place covers:*

Cranes which can assemble or erect themselves into their working configuration, not falling into one of the following four subgroups.

See for example US 3 378 147

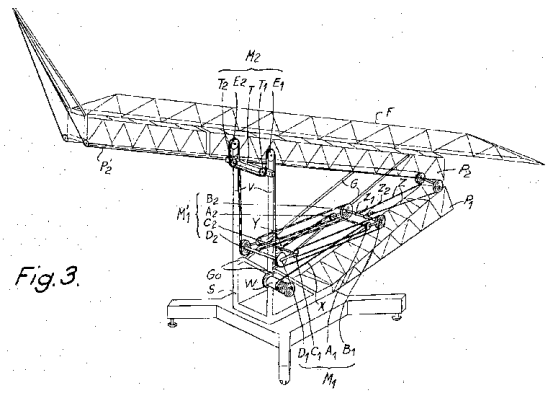


### References

#### *Limiting references*

*This place does not cover:*

| | |
|---|---|
| Mobile cranes with arrangements for assembling and lifting the boom from the ground. | B66C 23/82 |

# B66C 23/342

## {with telescopic elements}

### Definition statement

*This place covers:*

Cranes which erect by extending a telescopic section.

See for example US 4 446 975

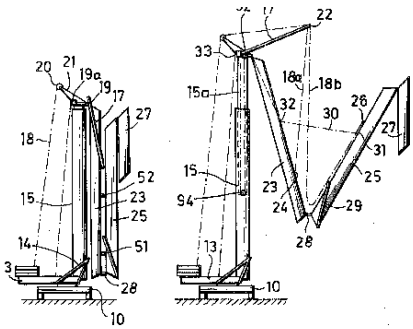

# B66C 23/344

## {adapted for transport purposes}

### Definition statement

*This place covers:*

Where the arrangement relates specifically to transport of the crane, i.e. not merely to folding the tower and jib to the horizontal position.

See for example US 2004/0221673

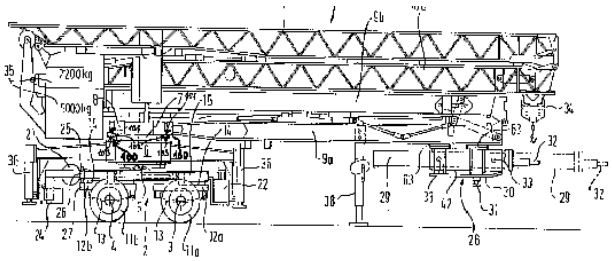

### References

#### *Limiting references*

*This place does not cover:*

| | |
|---|---|
| Mobile cranes dismantlable for transport | B66C 23/365 |

## B66C 23/346

### {with locking devices}

### Definition statement

*This place covers:*

Cranes with devices for locking the elements into their operating or transport positions.

See for example US 3 856 150

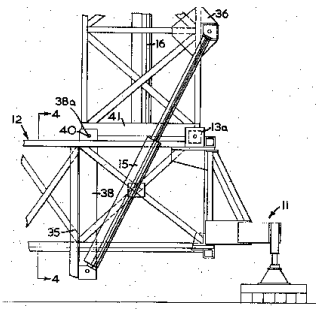


## B66C 23/348

### {the erection being operated by jacks}

### Definition statement

*This place covers:*

Cranes where the erecting mechanism uses jacks instead of for example winches and cables.

See for example US 2003/0127409

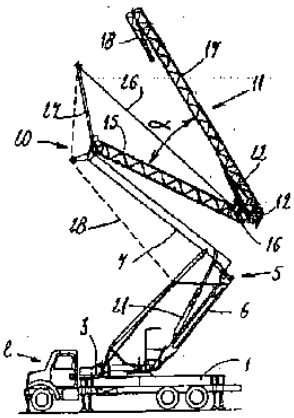


## B66C 23/36

### mounted on road or rail vehicles; Manually-movable jib-cranes for use in workshops; Floating cranes (with pneumatic or hydraulic motors B66C 23/54; vehicle or ship aspects B60 - B63)

### Definition statement

*This place covers:*

Vehicle mounted cranes not fitting one of the subgroups B66C 23/38 - B66C 23/56.

## B66C 23/365

### {dismantable into smaller units for transport purposes}

### Definition statement

*This place covers:*

See for example US 2007/0221600

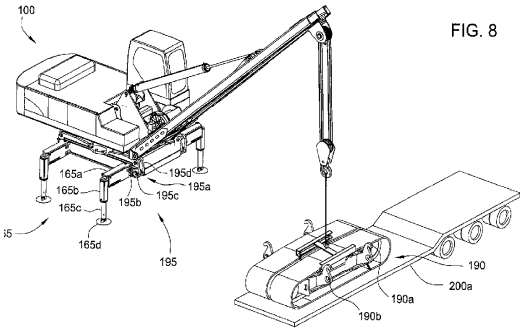


FIG. 8

### References

#### *Limiting references*

*This place does not cover:*

| | |
|---|---|
| Tower cranes dismantlable for transport | B66C 23/344 |

## B66C 23/38

### with separate prime movers for crane and vehicle

### Definition statement

*This place covers:*

Mobile cranes with more than one engine, e.g. where the engine driving the crane lifting functions is not used for propelling the crane along a road.

## B66C 23/40

### with a single prime mover for both crane and vehicle

### Definition statement

*This place covers:*

Where the same engine is used for driving the lifting functions and wheels or tracks.

## B66C 23/42

### with jibs of adjustable configuration, e.g. foldable

### Definition statement

*This place covers:*

Mobile cranes with telescopic or extendable jibs, or jibs which change configuration during operation.

See for example US 5 704 498

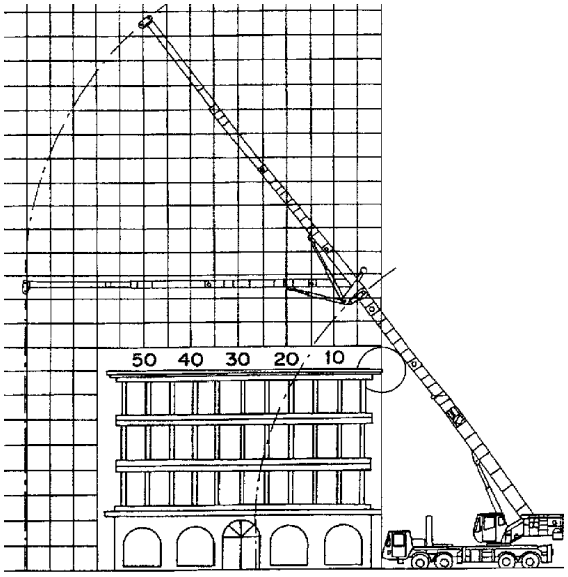


## References

### *Limiting references*

*This place does not cover:*

| | |
|---|---|
| Cranes with jibs which are folded for transport using cylinders. | B66C 23/54 |

# B66C 23/44

## Jib-cranes adapted for attachment to standard vehicles, e.g. agricultural tractors

## Definition statement

*This place covers:*

Vehicle mounted cranes, i.e. mounted on a normal vehicle rather than a mobile crane where the chassis is specially constructed for a crane.

pipe laying cranes where a boom is mounted to one side of a wheeled or tracked chassis.

See for example US 6 138 991 or US 7 600 646

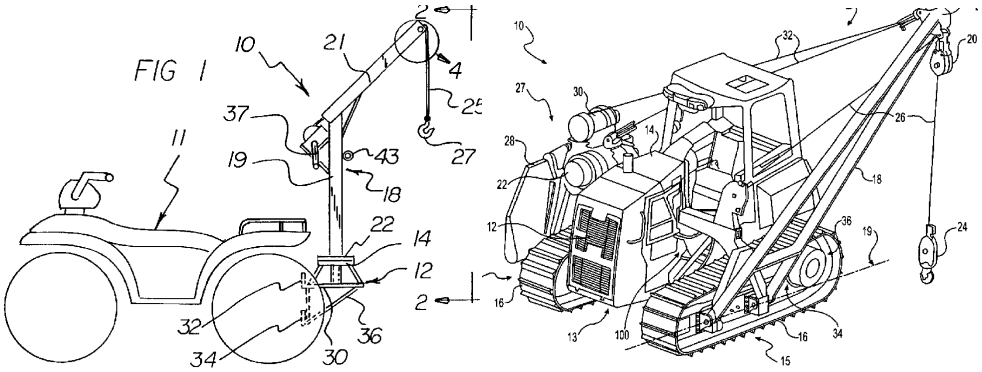

## References

### *Limiting references*

*This place does not cover:*

| | |
|---|---|
| Cylinder operated jibs on trucks | B66C 23/54 |

# B66C 23/46

## Mobile jib-cranes with non-slewable jibs

## References

### *Limiting references*

*This place does not cover:*

| | |
|---|---|
| Pipe laying cranes | B66C 23/44 |

# B66C 23/48

## Manually-movable jib cranes for use in workshops

## Definition statement

*This place covers:*

Small cranes on wheels which can be moved around manually or have simple drives.

See for example US 2011/0043062

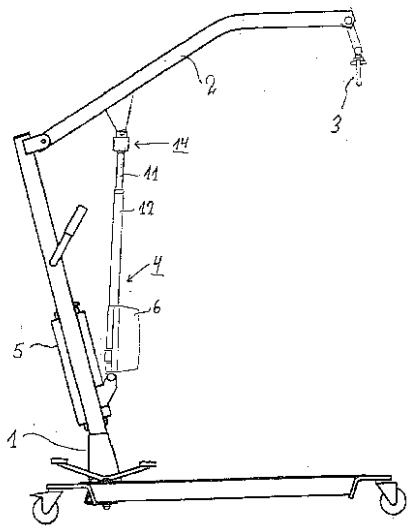

## B66C 23/485

### {for lifting and moving engines, e.g. car or aero engines or parts thereof}

### Definition statement

*This place covers:*

See for example US 5 800 000

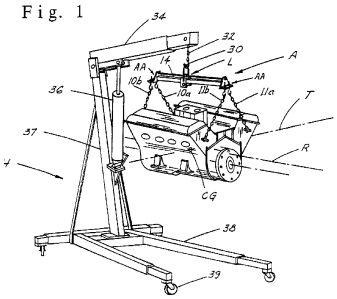


### References

#### *Limiting references*

*This place does not cover:*

| | |
|---|---|
| Load connecting element for lifting engines | B66C 1/107 |

## B66C 23/50

### mounted on railway vehicles, e.g. breakdown cranes

### Definition statement

*This place covers:*

See for example US 6 691 881

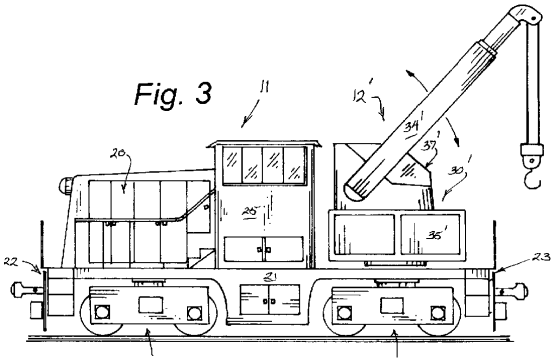


## B66C 23/52

### Floating cranes (floating dredgers E02F)

### Definition statement

*This place covers:*

Cranes mounted on a ship or other floating structure.

See for example US2011/0031205

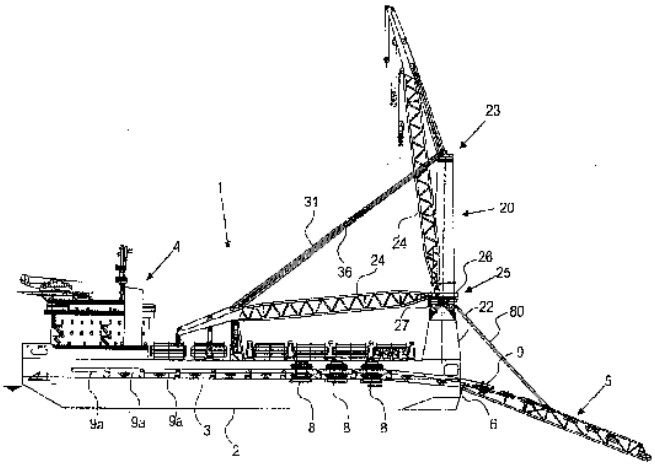

# B66C 23/525

## {Double slewing cranes on ships}

### Definition statement

*This place covers:*

Cranes with double jibs.

See for example US 3 684 104

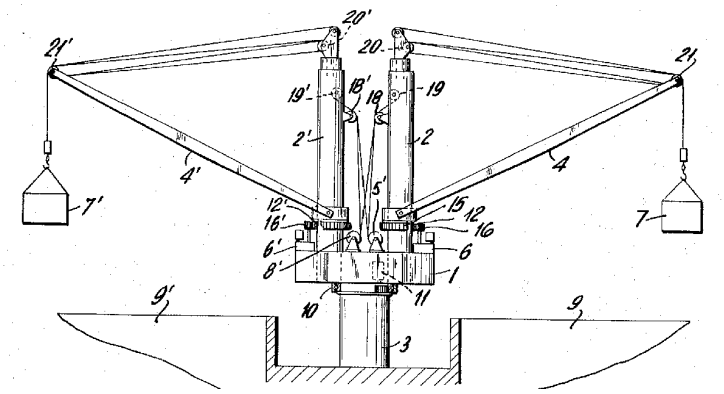

### References

#### *Limiting references*

*This place does not cover:*

| | |
|---|---|
| Cranes with double jibs mounted on land | B66C 23/00 |

## B66C 23/53

**including counterweight or means to compensate for list, trim, or skew of the vessel or platform (counterweights or supports for balancing lifting couples B66C 23/72; equipment to decrease unwanted vessel movements B63B 39/00)**

### Definition statement

*This place covers:*

See for example WO2011/019121

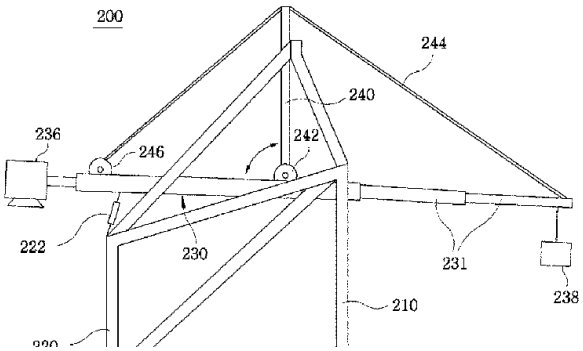


## B66C 23/54

**{with pneumatic or hydraulic motors, e.g. for actuating jib-cranes on tractors}**

### Definition statement

*This place covers:*

Jib cranes with hydraulic cylinders, e.g. for folding jib for transport.

See for example EP 1 707 529

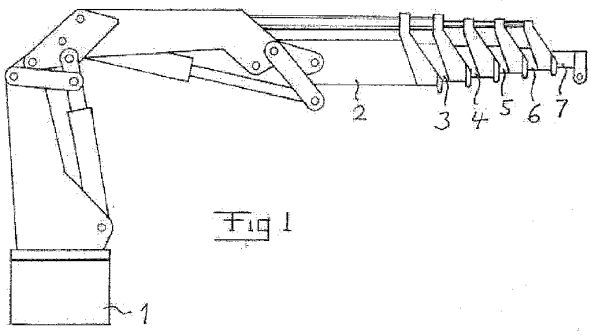


### Special rules of classification

No corresponding IPC exists. Subject matter should be given an IPC classification in B66C 23/68

## B66C 23/545

**{with arrangements for avoiding dead centre problems during cylinder motion}**

### Definition statement

*This place covers:*

See for example EP 0 733 585

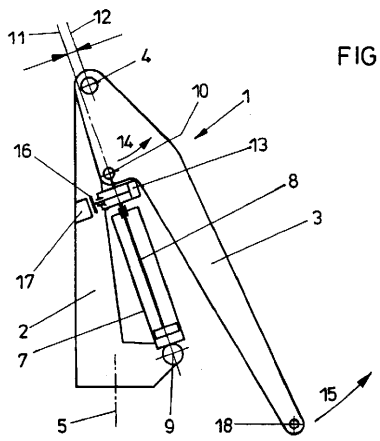


## B66C 23/56

**{of the reciprocating type}**

### Special rules of classification

This group is not used anymore.

## B66C 23/58

**arranged to carry out a desired sequence of operations automatically, e.g. hoisting followed by luffing and slewing**

### Definition statement

*This place covers:*

See for example US 4 091 943

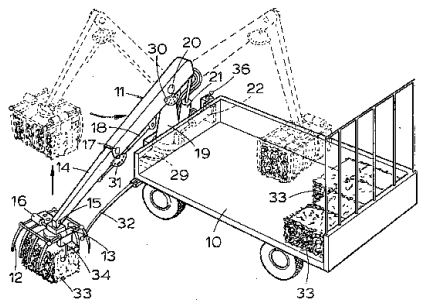

# B66C 23/60

## Derricks

### Definition statement

*This place covers:*

See for example US 4 826 023

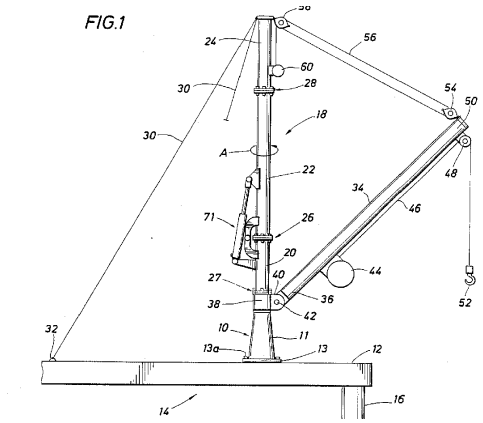


# B66C 23/605

## {employing ships' masts (B66C 23/525 takes precedence)}

### Definition statement

*This place covers:*

See for example US 4 187 949

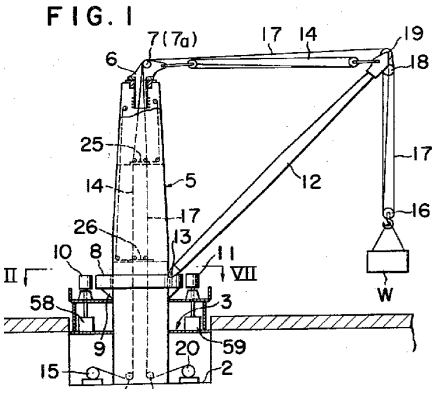


### References

#### *Limiting references*

*This place does not cover:*

| | |
|---|---|
| Double derricks on ships | B66C 23/525 |

# B66C 23/64

## Jibs

### Definition statement

*This place covers:*

Construction of jibs not covered by the following subgroups, e.g. non-telescopic jibs.

See for example US 2011/0114587

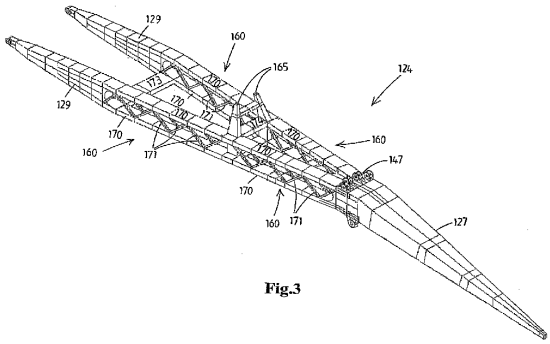


Fig.3

### References

#### *Limiting references*

*This place does not cover:*

| | |
|---|---|
| Telescopic jibs | B66C 23/701 |

# B66C 23/66

## Outer or upper end constructions

### Definition statement

*This place covers:*

See for example EP 1 156 007

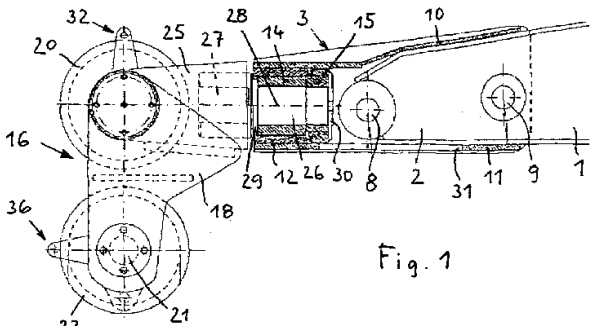


Fig. 1

### References

#### *Limiting references*

*This place does not cover:*

| | |
|---|---|
| Jib extensions for telescopic jibs | B66C 23/702 |

# B66C 23/68

## foldable or otherwise adjustable in configuration

### Definition statement

*This place covers:*

See for example US 2010/0294738

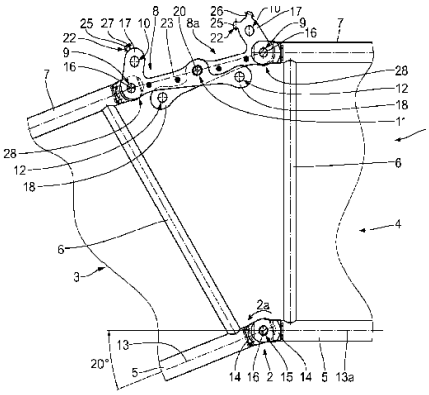

### References

#### *Limiting references*

*This place does not cover:*

| | |
|---|---|
| Folding jibs using cylinders | B66C 23/54 |
| Extendable jibs | B66C 23/70 |
| Telescopic jibs | B66C 23/701 |

# B66C 23/70

## constructed of sections adapted to be assembled to form jibs or various lengths

### Definition statement

*This place covers:*

See for example US 2004/0238471

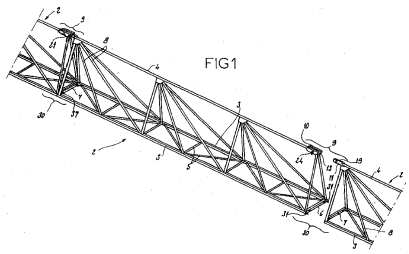


### References

#### *Limiting references*

*This place does not cover:*

| | |
|---|---|
| Telescopic jibs | B66C 23/701 |

# B66C 23/701

## {telescopic}

### Definition statement

*This place covers:*

Telescopic sections.

See for example EP 1 302 435

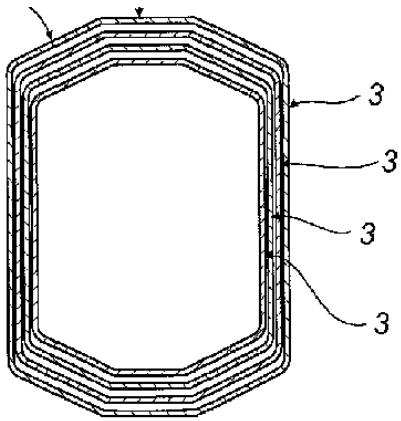


Telescoping actuator arrangements with a combination of actuators, e.g. by both cables and cylinders.

See for example US3721054

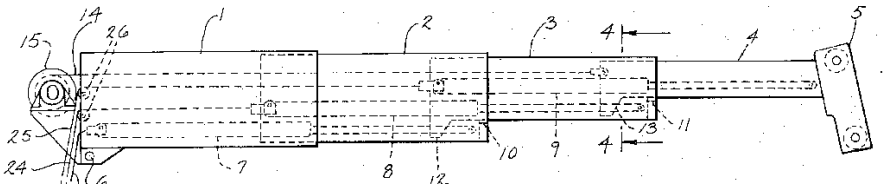

## B66C 23/702

### {with a jib extension boom}

### Definition statement

*This place covers:*

See for example US 2005/0098524

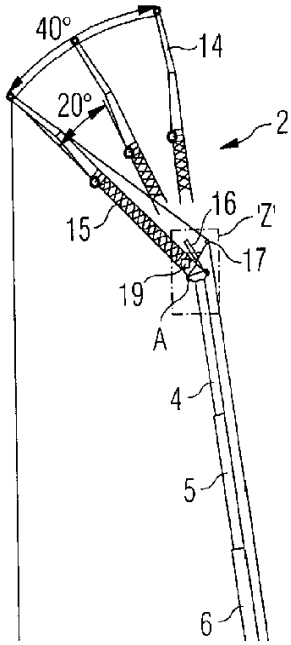


## B66C 23/703

### {telescoped by flexible elements, e.g. cables, chains or bands}

### Definition statement

*This place covers:*

See for example US 3 638 806

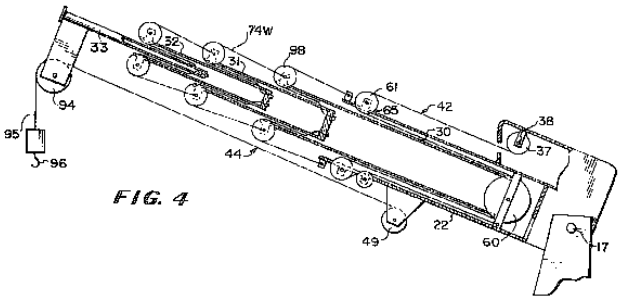


FIG. 4

### References

#### *Limiting references*

*This place does not cover:*

| | |
|---|---|
| Telescoping arrangements using both cables and cylinders | B66C 23/701 |

## B66C 23/705

### {telescoped by hydraulic jacks}

### Definition statement

*This place covers:*

See for example US 5 678 708

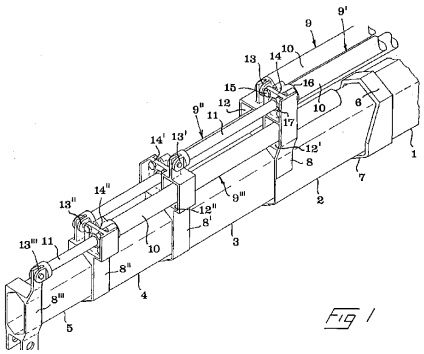


### References

#### *Limiting references*

*This place does not cover:*

| | |
|---|---|
| Telescoping arrangements using both cables and cylinders | B66C 23/701 |

## B66C 23/706

### {telescoped by other means}

### Definition statement

*This place covers:*

See for example US 4 298 128

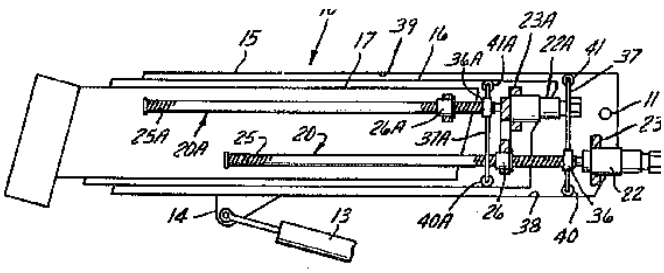


## B66C 23/707

### {guiding devices for telescopic jibs}

### Definition statement

*This place covers:*

Bearings between telescopic sections.

See for example US 6 499 612

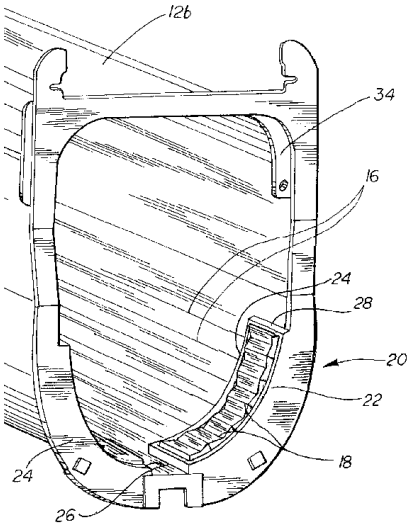


## B66C 23/708

### {locking devices for telescopic jibs}

### Definition statement

*This place covers:*

Arrangements to lock the telescopic sections in a particular position.

See for example US 6 216 895

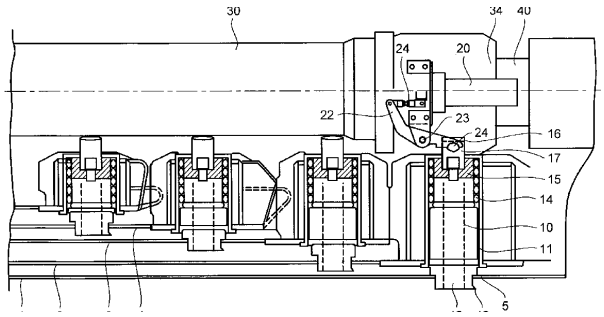


## B66C 23/72

### Counterweights or supports for balancing lifting couples

### Definition statement

*This place covers:*

Counterweights associated with jib.

See for example US 6 494 330

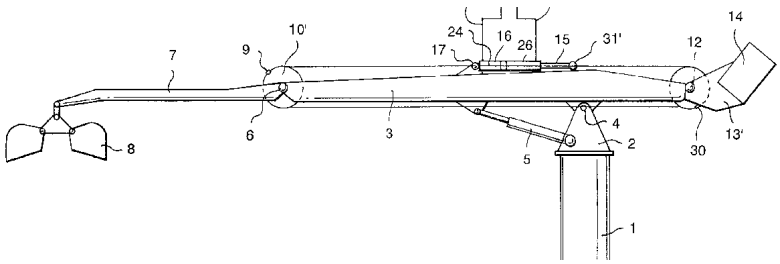


## References

### *Limiting references*

*This place does not cover:*

| | |
|---|---|
| Counterweights separate from jib | B66C 23/74 |

### *Informative references*

*Attention is drawn to the following places, which may be of interest for search:*

| | |
|---|---|
| Counterweights for excavators | E02F 9/18 |

# B66C 23/74

## separate from jib

## Definition statement

*This place covers:*

Static counterweights not associated with jib.

See for example US 2006/0043042

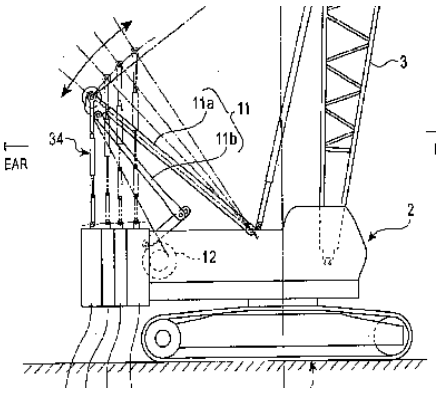


## References

### *Limiting references*

*This place does not cover:*

| | |
|---|---|
| Movable counterweights not associated with jib | B66C 23/76 |

## B66C 23/76

### and movable to take account of variations of load or of variations of length of jib

### Definition statement

*This place covers:*

Movable counterweights not associated with jib.

See for example US 6 568 547

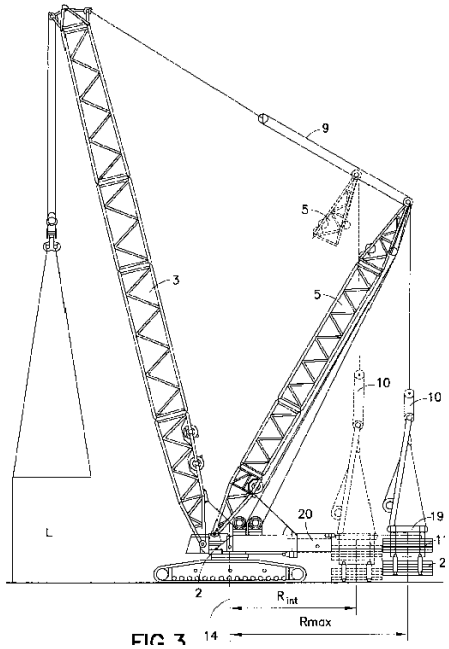


FIG. 3

## B66C 23/78

### Supports, e.g. outriggers, for mobile cranes

### Definition statement

*This place covers:*

See for example US 2010/0102018

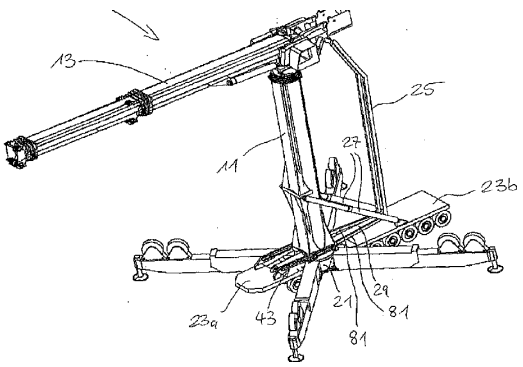

## References

### *Limiting references*

*This place does not cover:*

| | |
|---|---|
| Hydraulic outriggers | B66C 23/80 |

### *Informative references*

*Attention is drawn to the following places, which may be of interest for search:*

| | |
|---|---|
| Outriggers for excavators | E02F 9/08 |

# B66C 23/80

## hydraulically actuated

## Definition statement

*This place covers:*

See for example US 2004/0197181

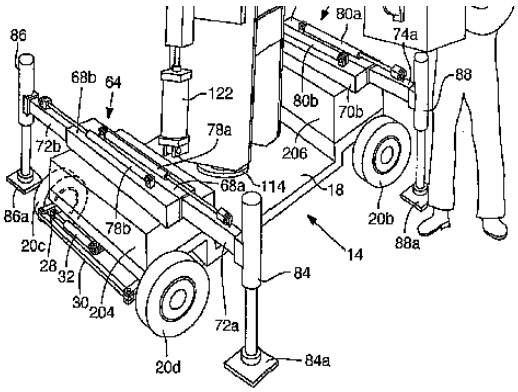


# B66C 23/82

## Luffing gear

## Definition statement

*This place covers:*

Devices for luffing the jib, including for erection purposes.

See for example US 2005/0098522

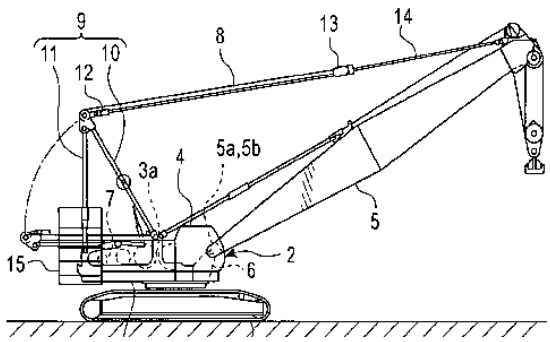

## References

### *Limiting references*

*This place does not cover:*

| | |
|---|---|
| Self erecting cranes, e.g. tower cranes | B66C 23/34 |

# B66C 23/821

## {Bracing equipment for booms}

## Definition statement

*This place covers:*

Bracing equipment to support bending load on the jib or boom, not covered by one of the following subgroups.

# B66C 23/823

## {Bracing equipment acting in vertical direction}

## Definition statement

*This place covers:*

See for example EP 1 213 254

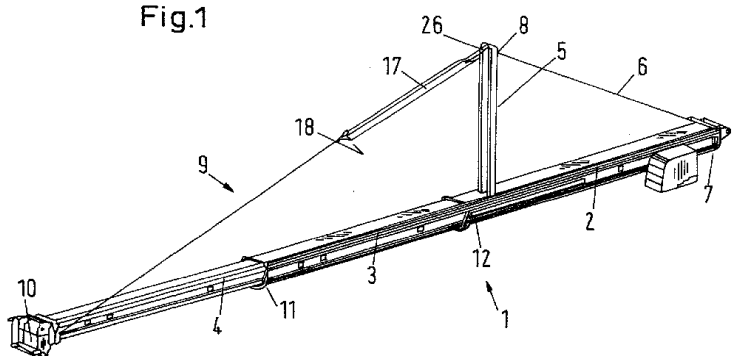

## B66C 23/825

### {Bracing equipment acting in horizontal direction}

### Definition statement

*This place covers:*

See for example EP 2 271 576

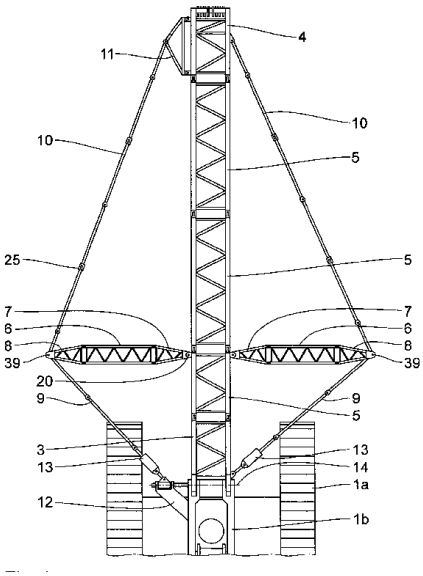


## B66C 23/826

### {Bracing equipment acting at an inclined angle to vertical and horizontal directions}

### Definition statement

*This place covers:*

See for example US 2004/0129663

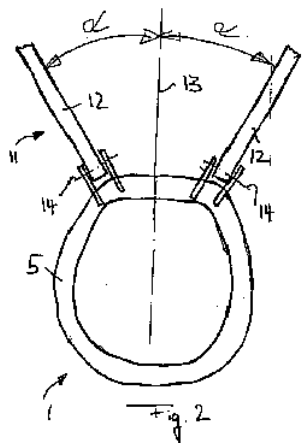

## B66C 23/828

### {where the angle is adjustable}

### Definition statement

*This place covers:*

See for example US 2002/0070187

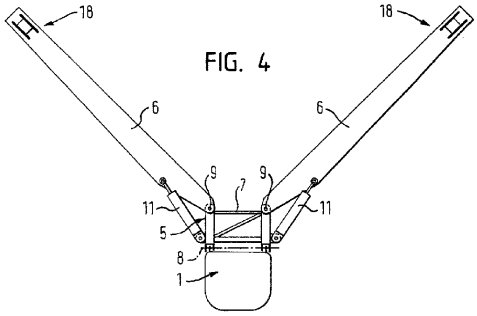


## B66C 23/84

### Slewing gear (anti-friction bearings F16C)

### Definition statement

*This place covers:*

Devices for slewing the upper works or boom of a crane.

See for example US2009/0074552

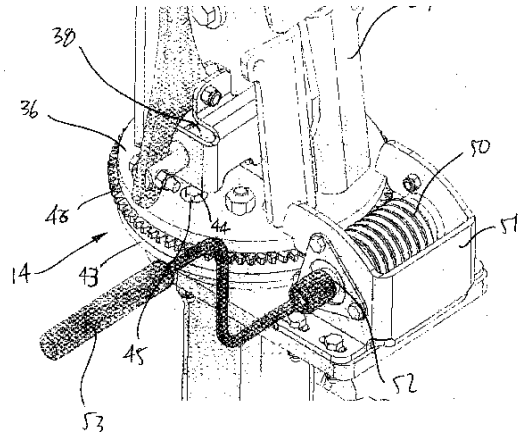


### References

#### *Limiting references*

*This place does not cover:*

| | |
|---|---|
| Hydraulic slewing devices | B66C 23/86 |

## B66C 23/86

### hydraulically actuated

### Definition statement

*This place covers:*

Devices for slewing the upper works or boom of a crane using hydraulic motors or cylinders.

See for example US 7 677 861

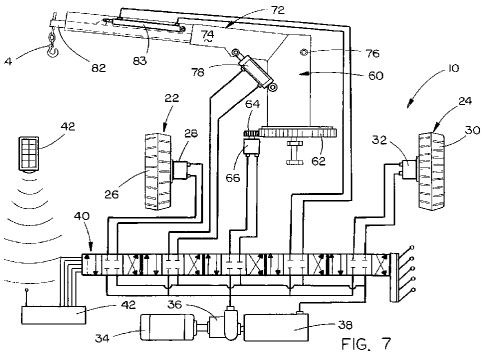

FIG. 7

## B66C 23/88

### Safety gear (for cranes in general B66C 15/00; for rope, cable, or chain winding mechanisms B66D 1/54)

### Definition statement

*This place covers:*

Safety gear for boom cranes not covered by one of the subgroups B66C 23/90 - B66C 23/94.

### References

#### *Limiting references*

*This place does not cover:*

| | |
|---|---|
| General crane safety devices | B66C 15/00 |

## B66C 23/90

### Devices for indicating or limiting lifting moment

### Definition statement

*This place covers:*

Non-electrical safety devices.

## B66C 23/905

**{electrical}**

### Definition statement

*This place covers:*

Electrical safety devices.

## B66C 23/92

**Snubbers or dashpots for preventing backwards swinging of jibs, e.g. in the event of cable or tackle breakage**

### Definition statement

*This place covers:*

See for example US 2 840 244

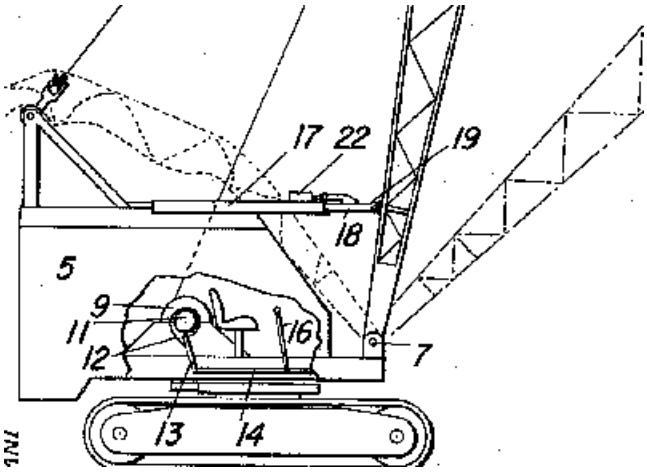


## B66C 23/94

**for limiting slewing movements**

### Definition statement

*This place covers:*
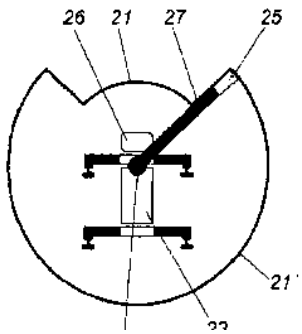
See for example US 2007/0144995