B66C

CRANES; LOAD-ENGAGING ELEMENTS OR DEVICES FOR CRANES, CAPSTANS, WINCHES, OR TACKLES ({specially adapted for lifting invalids A61G 7/10;} rope, cable, or chain winding mechanisms, braking or detent devices therefor B66D; specially adapted for nuclear reactors G21)

References

Limiting references

This place does not cover:

Devices for lifting patients or disabled persons	A61G 7/10
Toy cranes	A63H 17/12, A63H 33/3044
Devices for carrying objects by hand	B65G 7/12

Special rules of classification

The following IPC groups are not used in this classification scheme.

Subject matter of these groups is classified in the following groups:

IPC **B66C23/61** classified in B66C 23/60

IPC **B66C23/683** classified in B66C 23/68

IPC **B66C23/687** classified in B66C 23/701

IPC **B66C23/69** classified in B66C 23/701

IPC **B66C23/693** classified in B66C 23/705

IPC **B66C23/697** classified in B66C 23/707

The scheme includes entry B66C 23/54, for which no corresponding IPC exists. Subject matter should be given an IPC classification in B66C 23/68

B66C 1/00

Load-engaging elements or devices attached to lifting or lowering gear of cranes or adapted for connection therewith for transmitting lifting forces to articles or groups of articles (fastening to cables or ropes F16G 11/00)

Special rules of classification

Documents should be classified in the lowest subgroup possible and only classified in higher groups if none of the subgroups is applicable. If necessary documents should be classified in multiple subgroups. All non-trivial technical features should be classified. Main groups should only be used when no appropriate subgroup exists.

B66C 1/02

by suction means {(suction cups for attaching purposes F16B 47/00)}

References

Limiting references

This place does not cover:

Work holders	B25B 11/005
Robots with suction lifting devices	B25J 15/0616
Feed or transfer devices	B65G 47/91
Conveying fragile sheets	B65G 49/061
Separating articles from piles	B65H 3/0808
Suction cups for attaching purposes	F16B 47/00

B66C 1/0206

{for handling bulk or bags}

Definition statement

This place covers:

See for example US2007/0130884

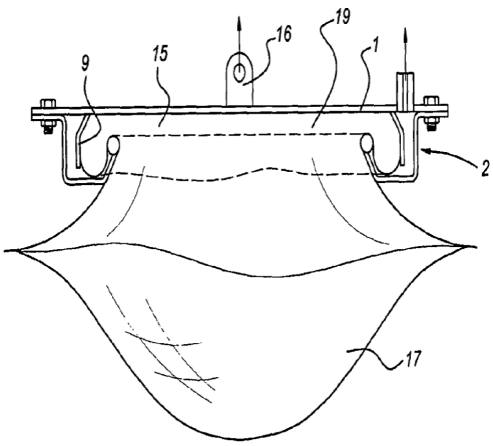

B66C 1/0212

{Circular shape}

Definition statement

This place covers:

suction means with a circular shape

See for example EP 1 775 243

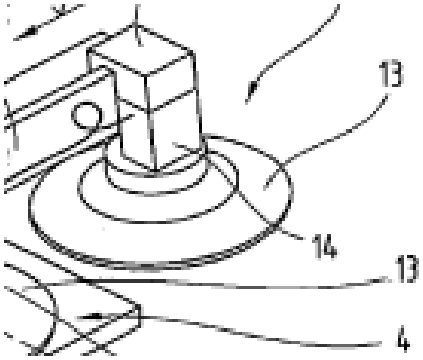

B66C 1/0218

{Safety measures, e.g. sensors, duplicate functions}

Definition statement

This place covers:

Arrangements for ensuring correct vacuum level or preventing load from falling if vacuum is lost.

B66C 1/0225

{Hand held}

Definition statement

This place covers:

Devices where the weight of the load is supported by the operator.

See for example US 2 212 755

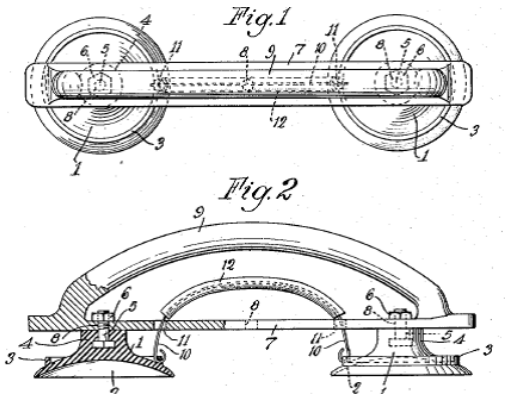

Relationships with other classification places

Also classified in B65G 7/12

B66C 1/0231

{Special lip configurations}

Definition statement

This place covers:

Devices where the edge of the suction cup has a particular arrangement, for example a shape.

See for example US 1 426 930

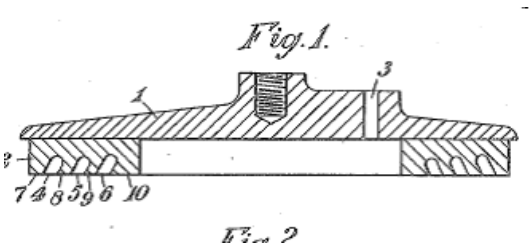

B66C 1/0237

{Multiple lifting units; More than one suction area}

Definition statement

This place covers:

This group not used, devices classified in following two subgroups.

B66C 1/0243

{Separate cups}

Definition statement

This place covers:

Devices where the suction cups are separated from each other by the mounting and/or piping arrangement.

See for example US 1 426 692

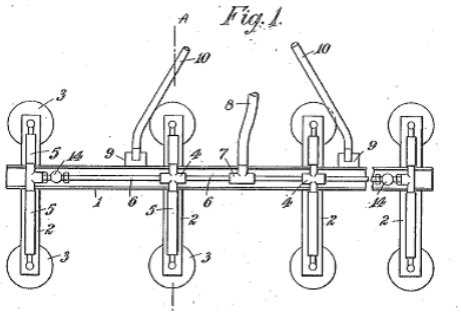

B66C 1/025

{Divided cups}

Definition statement

This place covers:

Devices where the suction cup is a single unit with separated vacuum areas.

See for example EP 1 118 578

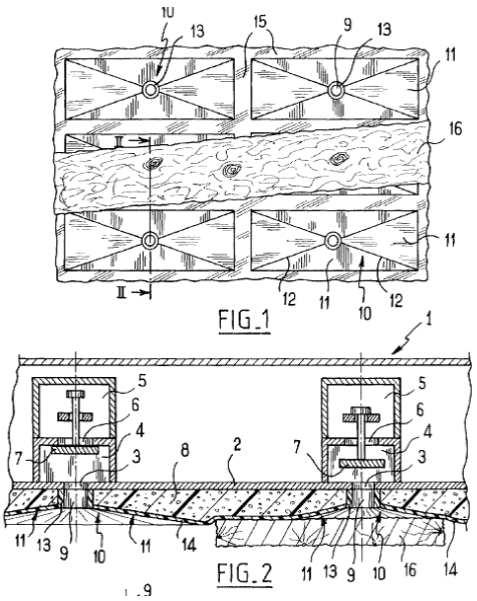

B66C 1/0256

{Operating and control devices}

Definition statement

This place covers:

General control arrangements not covered by the following three subgroups.

B66C 1/0262

{for rotation}

Definition statement

This place covers:

Devices for rotating the load being lifted.

See for example US 4 696 613

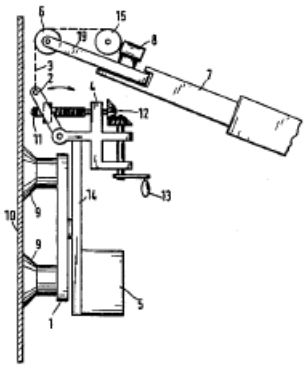

B66C 1/0268

{Venturi effect}

Definition statement

This place covers:

Devices where the vacuum is created using venturi or bernouilli principle.

See for example GB 1 396 737

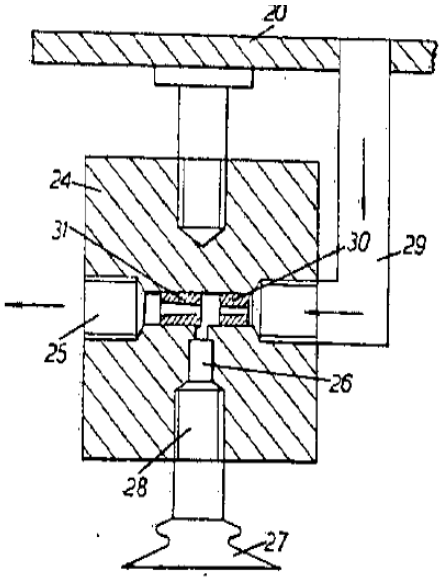

B66C 1/0275

{actuated by lifting action}

Definition statement

This place covers:

Devices where the action of lifting the device creates the vacuum between the load and the suction cup.

See for example US 7 543 868

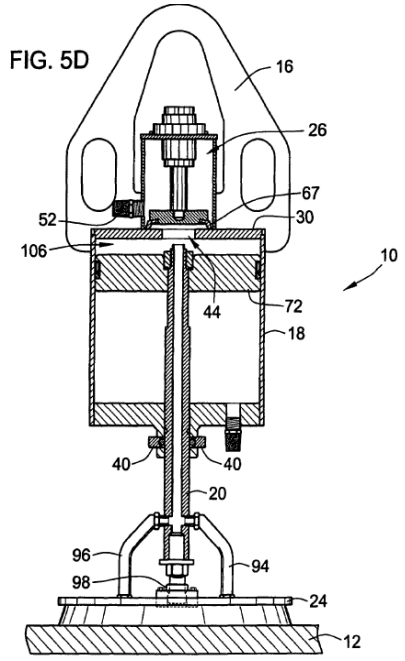

B66C 1/0281

{Rectangular or square shape}

Definition statement

This place covers:

suction means with a rectangular shape

See for example US 3 506 297

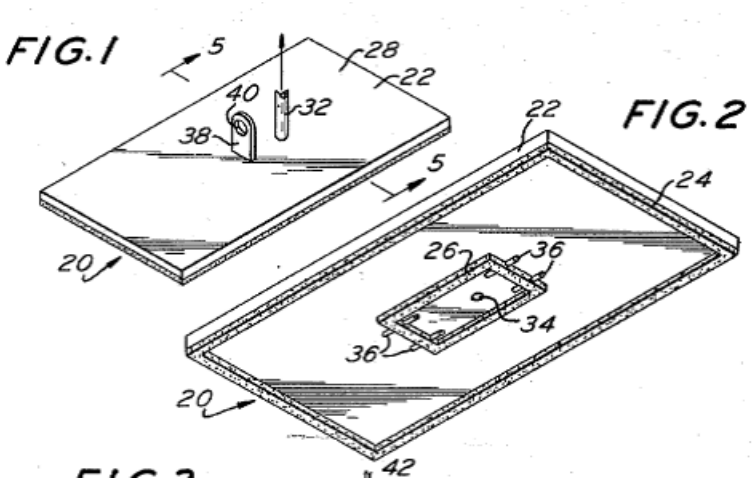

B66C 1/0287

{Other shapes, e.g. triangular or oval}

Definition statement

This place covers:

Shapes which are neither circular nor rectangular or are non-planar.

See for example US 4 084 306

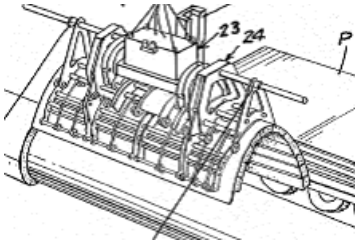

B66C 1/0293

{Single lifting units; Only one suction cup}

Definition statement

This place covers:

Devices with only a single vacuum area.

See for example US 4 413 853

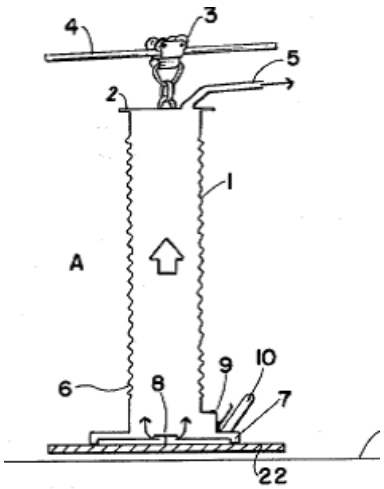

B66C 1/04

by magnetic means

Definition statement

This place covers:

Lifting devices with permanent magnets.

References

Limiting references

This place does not cover:

Work holders	B25B 11/002
Robots with magnetic lifting devices	B25J 15/0608
Feed or transfer devices	B65G 47/92
Separating articles from piles	B65H 3/16
Lifting devices with both electromagnets and permanent magnets	B66D 1/06

Informative references

Attention is drawn to the following places, which may be of interest for search:

Permanent magnets for lifting or picking up	H01F 7/0257

B66C 1/06

electromagnetic

References

Informative references

Attention is drawn to the following places, which may be of interest for search:

Electromagnets for lifting or transporting magnetic material	H01F 7/206

B66C 1/08

Circuits therefor (for electromagnets in general H01F 7/18)

References

Informative references

Attention is drawn to the following places, which may be of interest for search:

Circuits for electromagnets in general	H01F 7/18

B66C 1/10

by mechanical means

Definition statement

This place covers:

mechanical load engaging devices not covered by one of the following subgroups

See for example US 5 800 000

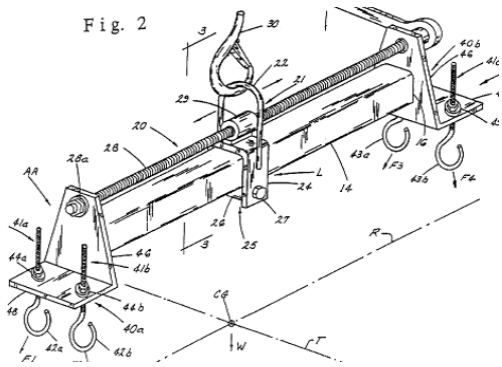

B66C 1/101

{for containers (B66C 1/223 and B66C 1/663 take precedence)}

Definition statement

This place covers:

Lifting devices for containers.

See for example US 2008/0292440

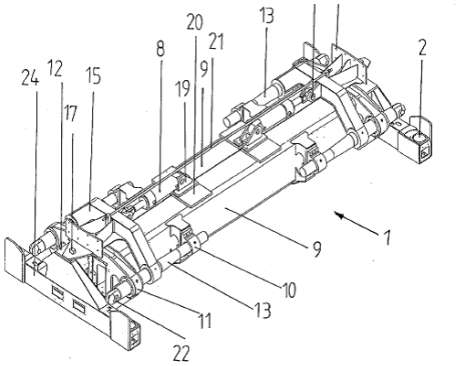

References

Limiting references

This place does not cover:

Connectors, e.g. twistlocks, for connecting a lifting device to a container	B66C 1/663

B66C 1/102

{for two or more containers end to end}

Definition statement

This place covers:

See for example US 2009/0278368

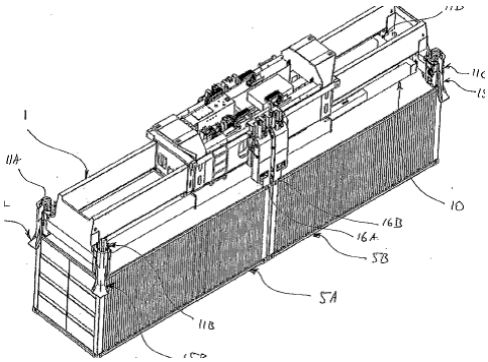

B66C 1/104

{for two or more containers side by side}

Definition statement

This place covers:

See for example EP 1 857 401

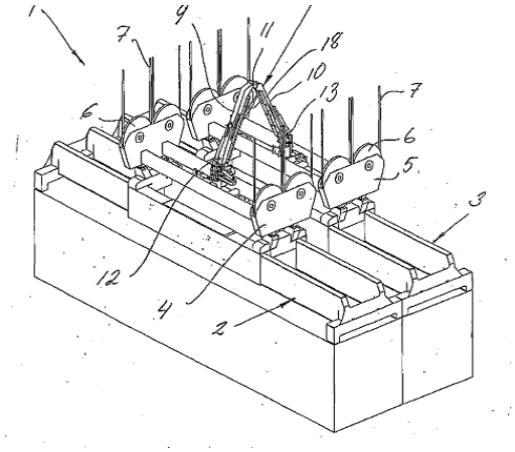

B66C 1/105

{Lifting beam permitting to depose a load through an opening}

Definition statement

This place covers:

Devices where the load support is not directly under the crane hook, to allow the load to be deposited to one side.

See for example US 7 017 963

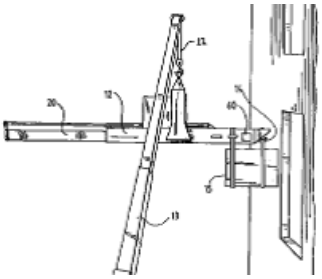

B66C 1/107

{for lifting engines}

Definition statement

This place covers:

Load supporting devices for lifting engines.

See for example US 3 995 903.

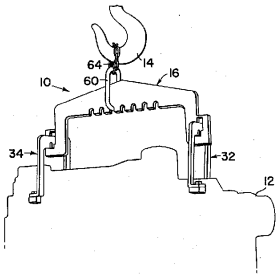

References

Limiting references

This place does not cover:

Manually movable cranes for lifting engines	B66C 23/485

B66C 1/108

{for lifting parts of wind turbines}

Definition statement

This place covers:

Load supporting devices for wind turbine parts.

See for example US 2009/0025219.

FIG 1

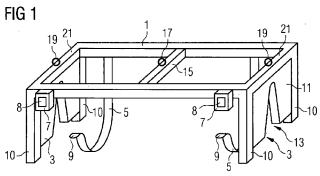

FIG 2

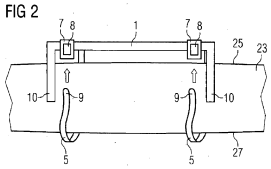

References

Limiting references

This place does not cover:

Cranes for lifting wind turbines	B66C 23/185

B66C 1/12

Slings comprising chains, wires, ropes, or bands; Nets (article side grippers suspended by ropes or chains from crane hooks B66C 1/42)

Definition statement

This place covers:

Slings not covered by one of the following subgroups.

Devices where a sling is suspended from a platform.

References

Limiting references

This place does not cover:

Devices where a platform is suspended from a sling	B66C 1/16
Construction of cables or slings	D07B 1/00

B66C 1/122

{Sling or load protectors}

Definition statement

This place covers:

Devices for protecting the sling from damage.

See for example US 4 039 218

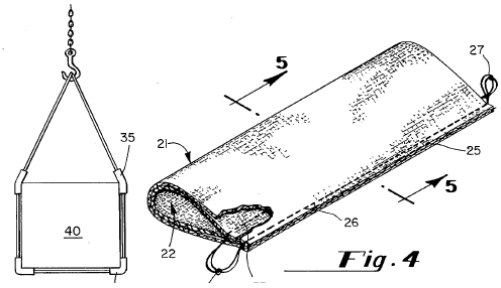

References

Limiting references

This place does not cover:

Devices for protecting the load	B65D 71/04

B66C 1/125

{Chain-type slings (chains in general F16G)}

Definition statement

This place covers:

Lifting chains connecting the load to the lifting device

See for example US 2 989 287

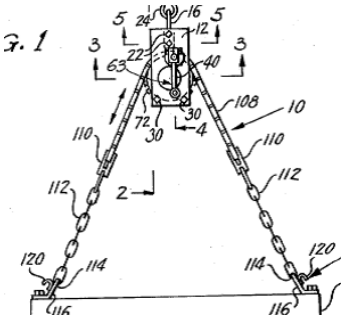

References

Limiting references

This place does not cover:

Chains with hook for attaching to load	B66C 1/14
General chains	F16G

B66C 1/127

{Nets}

Definition statement

This place covers:

See for example US 3 142 507

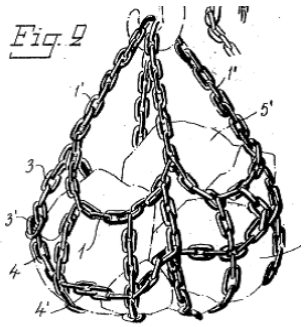

B66C 1/14

Slings with hooks

Definition statement

This place covers:

Chains or slings with hooks to attach to load.

See for example US 4 017 111

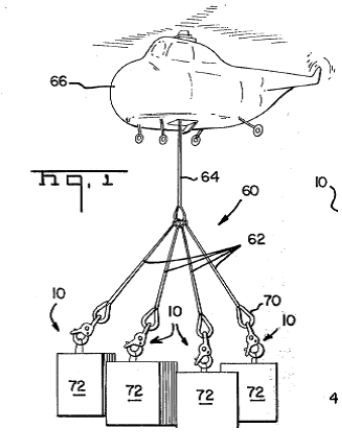

References

Limiting references

This place does not cover:

Chains with hook for attaching to chain link to form a loop around load	B66C 1/125
Devices for lifting barrels	B66C 1/625

B66C 1/16

Slings with load-engaging platforms or frameworks

Definition statement

This place covers:

Devices where a platform is suspended from a sling.

See for example US 4 831 967

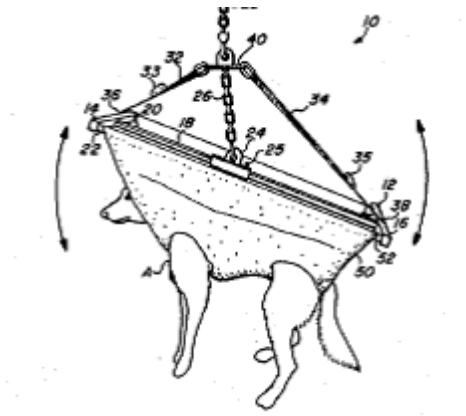

References

Limiting references

This place does not cover:

Devices where a sling is suspended from a platform	B66C 1/12

B66C 1/18

Band-type slings

Definition statement

This place covers:

Slings with a flat cross-section.

See for example US 2008/0277952

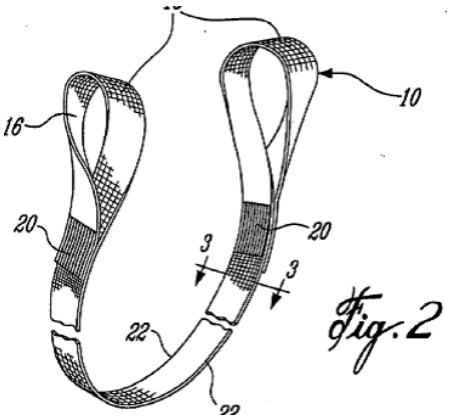

References

Limiting references

This place does not cover:

Straps for attaching loads e.g. to trucks	B60P 7/0823
Construction of cables or slings	D07B 1/22

B66C 1/20

specially adapted for handling vehicles

Definition statement

This place covers:

See for example US 4 232 893

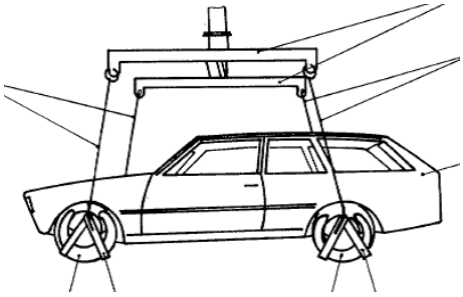

B66C 1/22

Rigid members, e.g. L-shaped members, with parts engaging the under surface of the loads; Crane hooks

Definition statement

This place covers:

See for example US 3 010 751

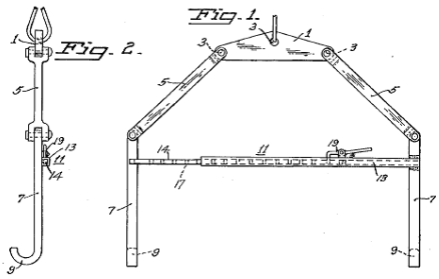

B66C 1/223

{for containers}

Definition statement

This place covers:

Rigid lifting devices for lifting a container from below

See for example US 5 649 805

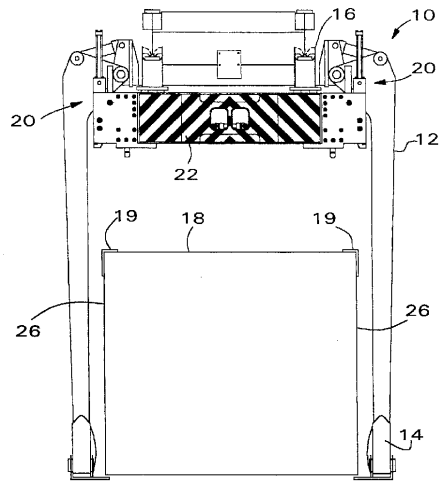

References

Limiting references

This place does not cover:

Lifting (e.g. from above) using twistlocks	B66C 1/663

B66C 1/226

{for flexible intermediate bulk containers [FIBC]}

Definition statement

This place covers:

See for example US 2005/0199650

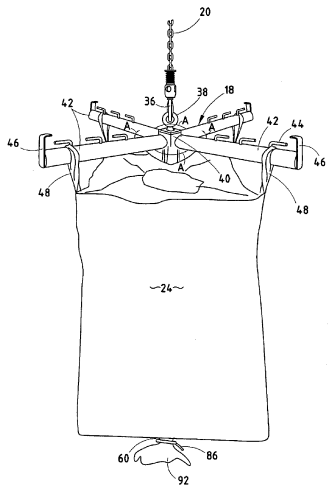

B66C 1/24

Single members engaging the loads from one side only

Definition statement

This place covers:

See for example US 2006/0175850

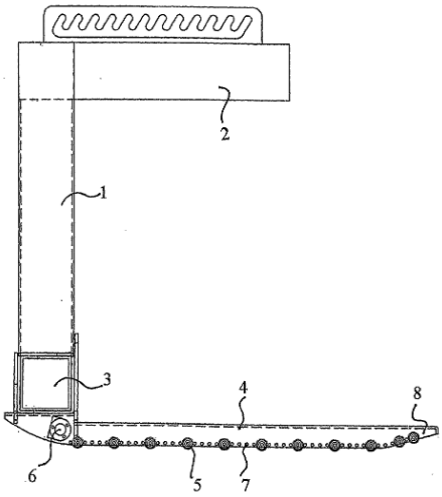

B66C 1/26

with means for releasing the loads

Definition statement

This place covers:

See for example US 1 777 119

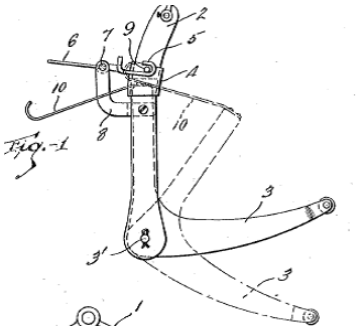

B66C 1/28

Duplicate, e.g. pivoted, members engaging the loads from two sides

Definition statement

This place covers:

See for example US 5 066 189

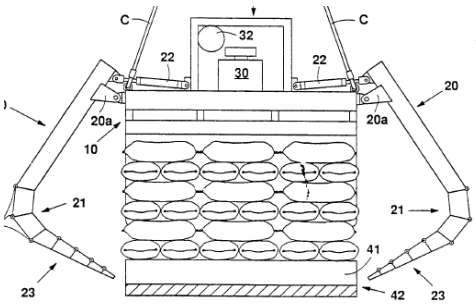

FIG. 6

B66C 1/30

and also arranged to grip the sides of the loads

Definition statement

This place covers:

See for example US 3 001 812

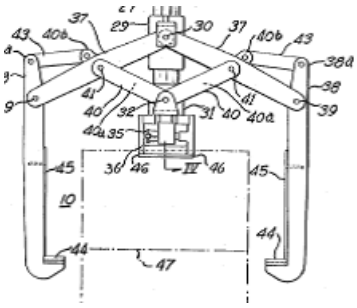

B66C 1/32

of piled or stacked articles

Definition statement

This place covers:

See for example US 2 670 985

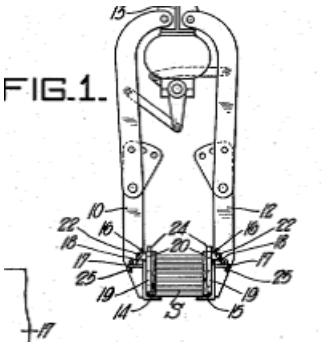

B66C 1/34

Crane hooks

Definition statement

This place covers:

See for example US 2011/0011818

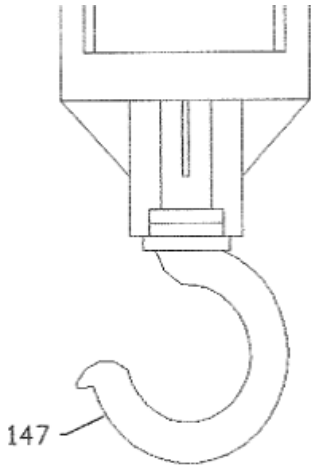

B66C 1/36

with means, e.g. spring-biased detents, for preventing inadvertent disengagement of loads

Definition statement

This place covers:

See for example US 2009/0049663

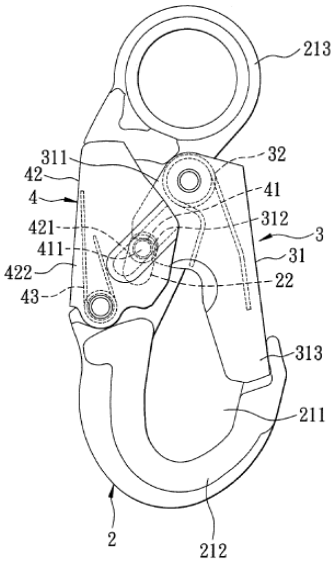

B66C 1/38

adapted for automatic disengagement from loads on release of cable tensions (for parachutes {B64D 17/00})

Definition statement

This place covers:

Hooks where the load is automatically released when the load is lowered.

See for example US 5 292 165

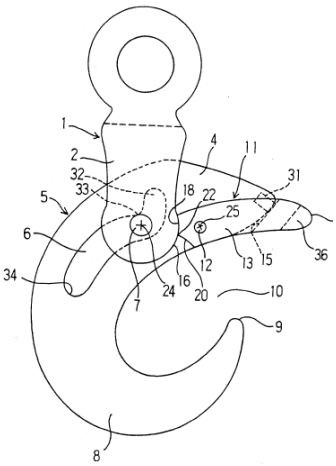

References

Limiting references

This place does not cover:

Non-automatic release arrangements	B66C 1/34

B66C 1/40

formed or fitted with load measuring or indicating devices

Definition statement

This place covers:

Load measurement on the hook.

See for example US 2010/0037700

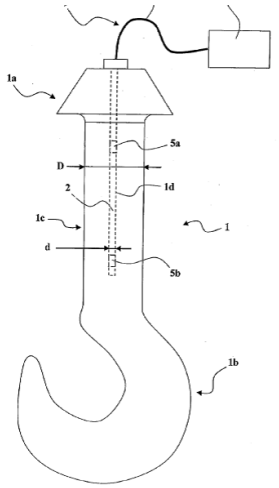

References

Limiting references

This place does not cover:

Load measurement elsewhere on crane	B66C 13/16

B66C 1/42

Gripping members engaging only the external or internal surfaces of the articles (for handling or stripping castings or ingots during manufacture B22D 29/00)

Definition statement

This place covers:

Gripping members not relying on friction to hold load, e.g. where the shape of the device ensures sufficient hold.

References

Limiting references

This place does not cover:

Gripping members for particular articles	B66C 1/62

B66C 1/422

{actuated by lifting force (B66C 1/44, B66C 1/58 take precedence)}

Definition statement

This place covers:

See for example US 5 842 729

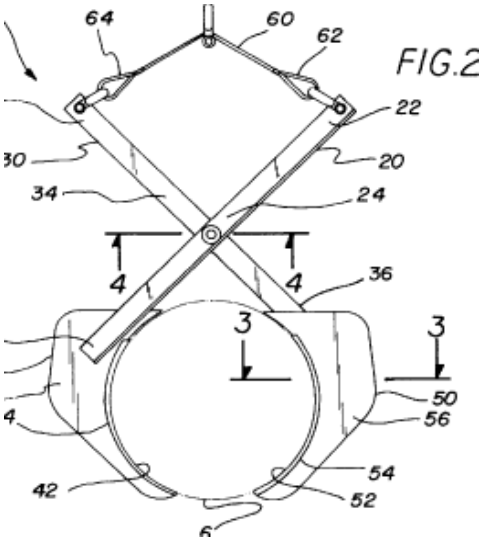

B66C 1/425

{motor actuated (B66C 1/44, B66C 1/58 take precedence)}

Definition statement

This place covers:

See for example US 2 226 789

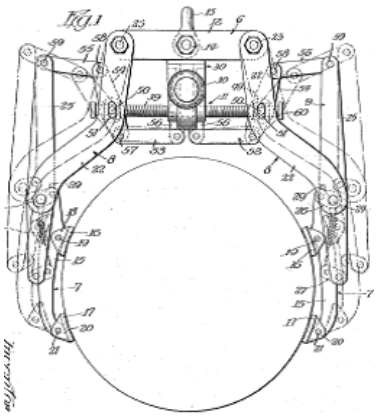

B66C 1/427

{by hydraulic or pneumatic motors}

Definition statement

This place covers:

Devices using fluid motors or cylinders.

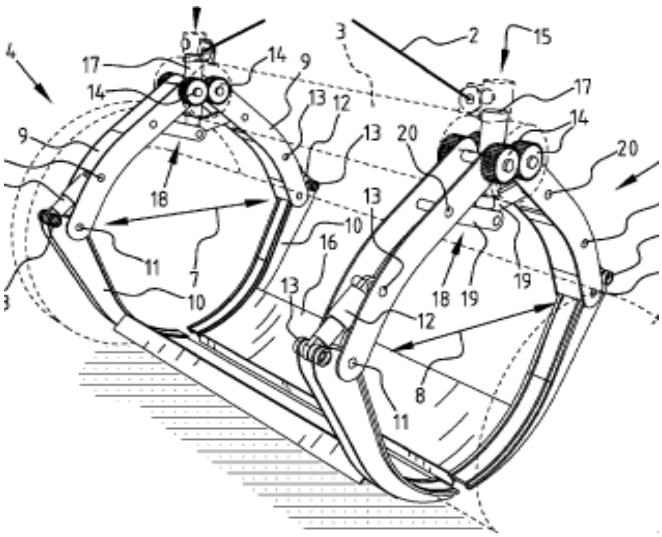

B66C 1/44

and applying frictional forces

Definition statement

This place covers:

Gripping members relying on friction to hold load.

B66C 1/442

{actuated by lifting force}

Definition statement

This place covers:

See for example US 5 280 982

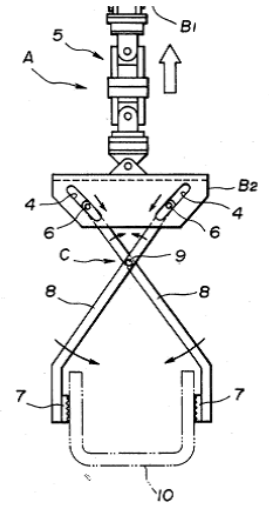

B66C 1/445

{motor actuated}

Definition statement

This place covers:

See for example US 5 997 064

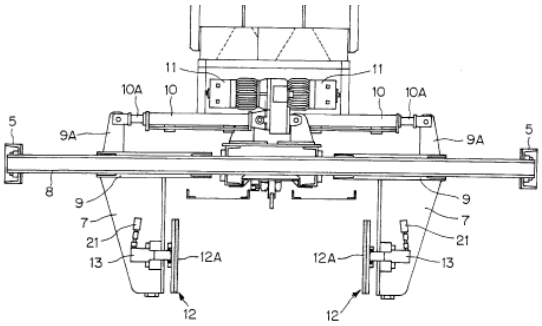

B66C 1/447

{by hydraulic or pneumatic motors}

Definition statement

This place covers:

See for example US 5 209 536

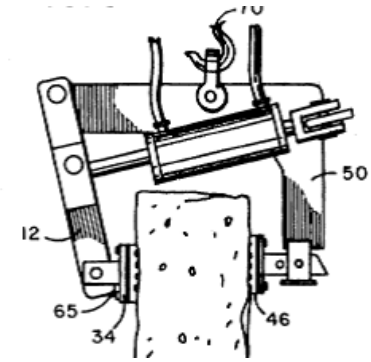

B66C 1/46

by inflatable elements

Definition statement

This place covers:

See for example US 3 219 382

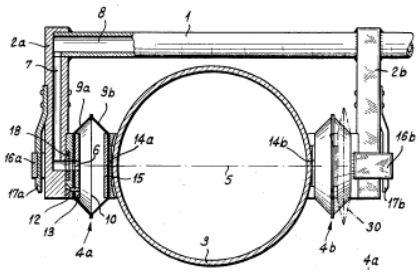

B66C 1/48

to vertical edge portions of sheets, tubes, or like thin or thin-walled articles (internally-expanding grippers B66C 1/54)

Definition statement

This place covers:

See for example US 2009/0218836

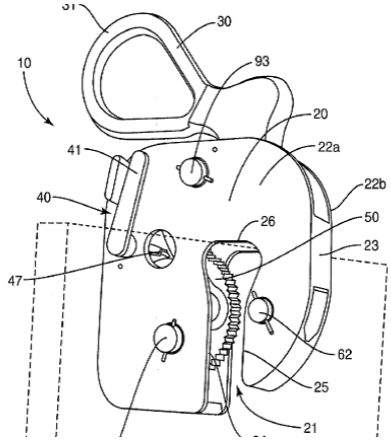

B66C 1/485

{Coil lifting devices}

Definition statement

This place covers:

See for example US 4 253 696

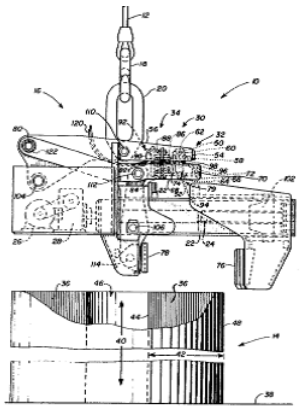

References

Limiting references

This place does not cover:

Lifting coils using magnets	B66C 1/04
Lifting coils using internal grippers	B66C 1/54

B66C 1/54

Internally-expanding grippers for handling hollow articles (B66C 1/46 takes precedence)

Definition statement

This place covers:

See for example US 5 971 457

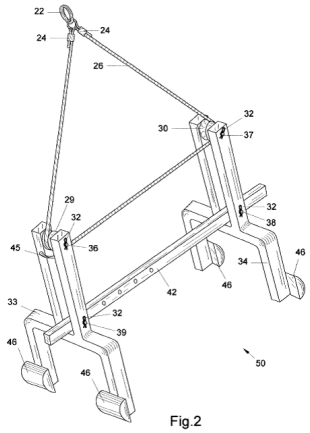

Fig.2

B66C 1/56

for handling tubes

Definition statement

This place covers:

See for example US 2 778 671

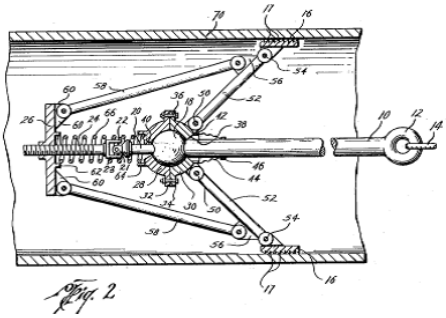

Fig. 2

B66C 1/58

and deforming the articles, e.g. by using gripping members such as tongs or grapples

Definition statement

This place covers:

See for example US 3 695 670

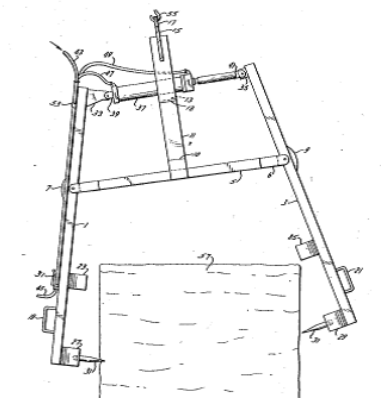

B66C 1/585

{Log grapples}

Definition statement

This place covers:

See for example US 6 315 344

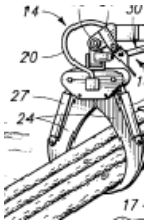

B66C 1/59

Tongs for sacks

Definition statement

This place covers:

See for example US 4 648 646

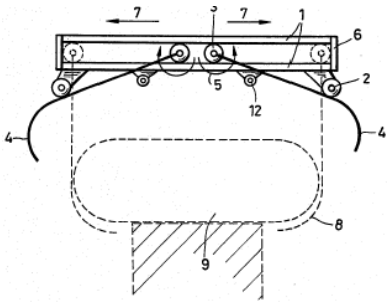

B66C 1/62

comprising article-engaging members of a shape complementary to that of the articles to be handled

Definition statement

This place covers:

See for example US 5 158 416

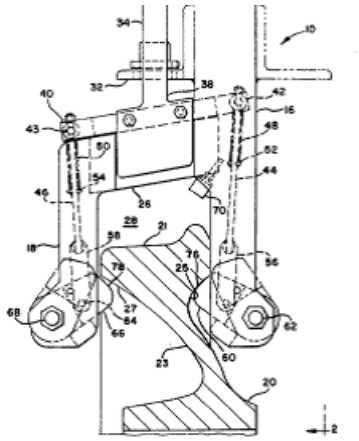

B66C 1/625

{for gripping drums or barrels}

Definition statement

This place covers:

devices gripping drums or barrels either by their body or edges

See for example US2010/0140968

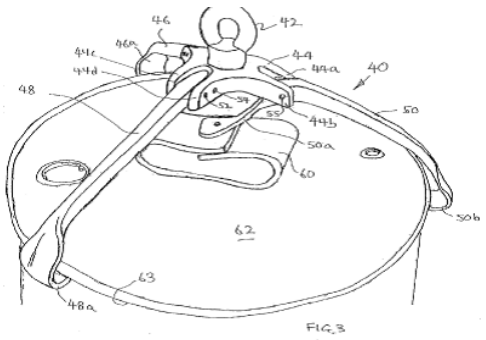

B66C 1/64

for T- or I-section beams or girders

Definition statement

This place covers:

See for example US 4 371 203

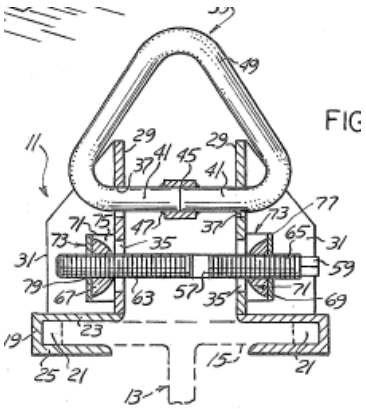

B66C 1/66

for engaging holes, recesses, or abutments on articles specially provided for facilitating handling thereof

Definition statement

This place covers:

Devices such as lifting rings or pins lifting via holes in object being lifted

See for example US 7 014 230

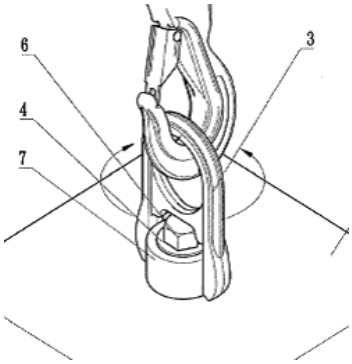

B66C 1/663

{for containers (fastening of containers on vehicles B60P 7/13, B60P 7/132)}

Definition statement

This place covers:

Devices such as twistlocks, which connect a lifting device to a container

See for example US 2004/0256266

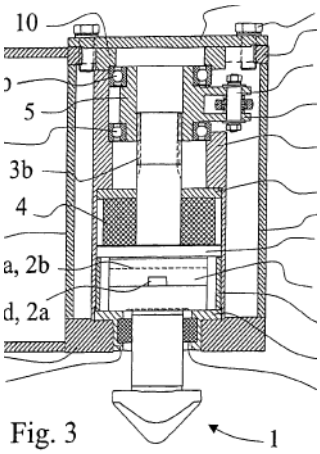

Fig. 3

References

Limiting references

This place does not cover:

Lifting devices per se such as spreaders for containers	B66C 1/101
Lifting from below container	B66C 1/223

B66C 1/666

{for connection to anchor inserts embedded in concrete structures}

Definition statement

This place covers:

See for example US 4 634 164

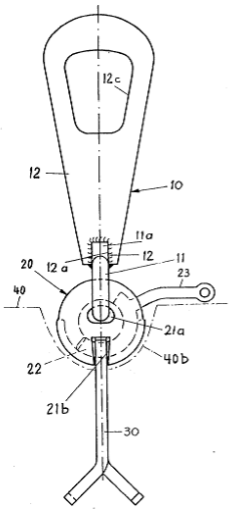

FIG.1

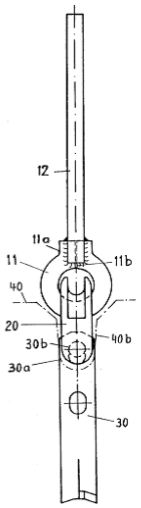

FIG.2

References

Informative references

Attention is drawn to the following places, which may be of interest for search:

Anchors in concrete elements	E04G 21/142

B66C 1/68

mounted on, or guided by, jibs (jibs B66C 23/64)

Definition statement

This place covers:

lifting devices mounted on a rigid arm, boom, jib etc. rather than suspended from a flexible element such as a cable or chain

See for example US 2009/0245989

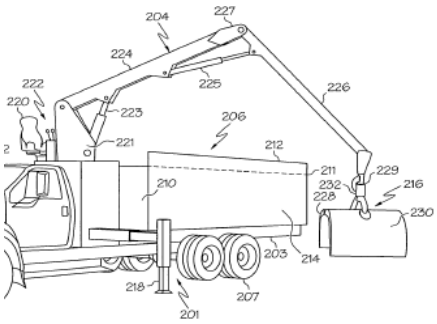

B66C 3/005

{Grab supports, e.g. articulations; Oscillation dampers; Orientation (B66C 3/16 takes precedence)}

Definition statement

This place covers:

See for example US 2006/0086685

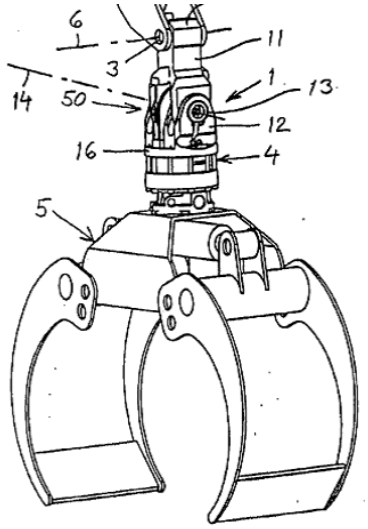

B66C 3/02

Bucket grabs

Definition statement

This place covers:

See for example US 3 949 498

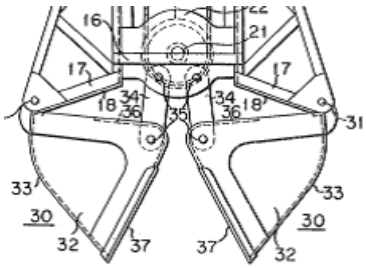

B66C 3/04

Tine grabs

Definition statement

This place covers:

See for example US 2003/0042748

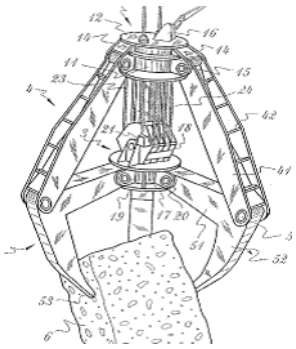

B66C 3/06

Grabs actuated by a single rope or chain

Definition statement

This place covers:

Devices where a single rope is used for both raising and subgroupsering and opening/closing.

See for example US 5 649 729

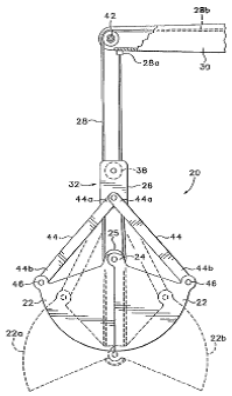

B66C 3/08

and having tipping rings

Definition statement

This place covers:

See for example US 1 853 250

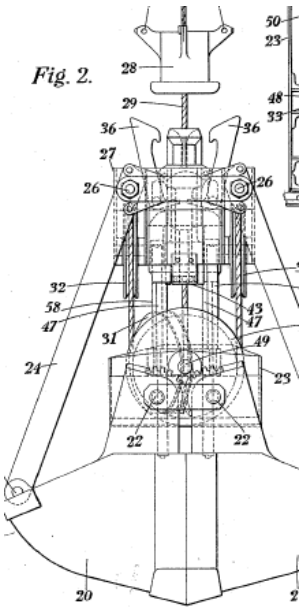

B66C 3/10

and having buckets opening automatically upon the grab being lowered on to the dump of material

Definition statement

This place covers:

See for example US 4 807 918

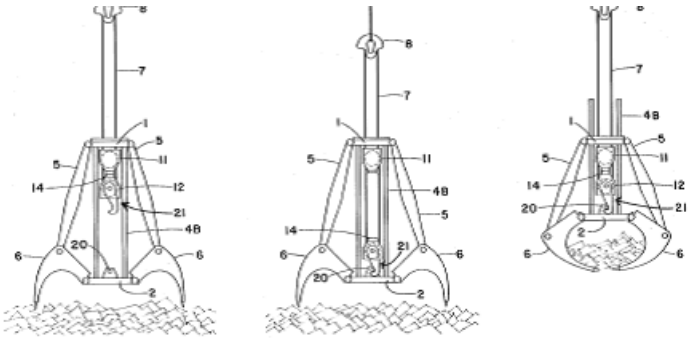

B66C 3/105

{Devices for control}

Definition statement

This place covers:

See for example US 2 270 916

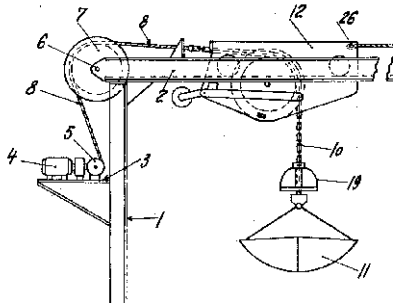

B66C 3/12

Grabs actuated by two or more ropes

Definition statement

This place covers:

Devices where separate ropes are used for raising and subgroupsering and opening/closing.

See for example US 4 328 987

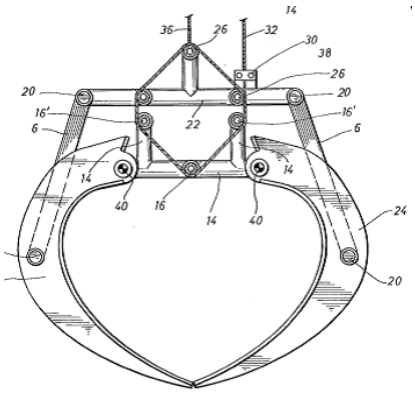

B66C 3/125

{Devices for control}

Definition statement

This place covers:

See for example US 4 231 698

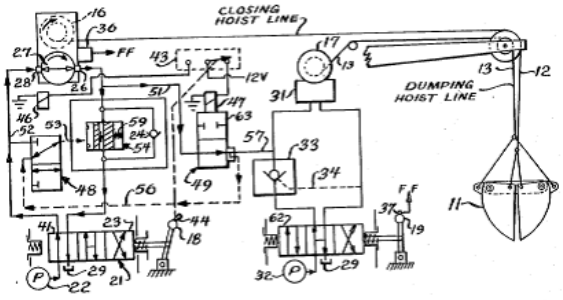

B66C 3/14

Grabs opened or closed by driving motors thereon

Definition statement

This place covers:

Grabs operated other than by electric or hydraulic motors, e.g. magnets

See for example US 6 179 357

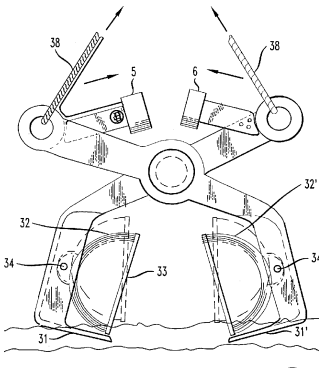

B66C 3/16

by fluid motors

Definition statement

This place covers:

See for example US 2006/0230649

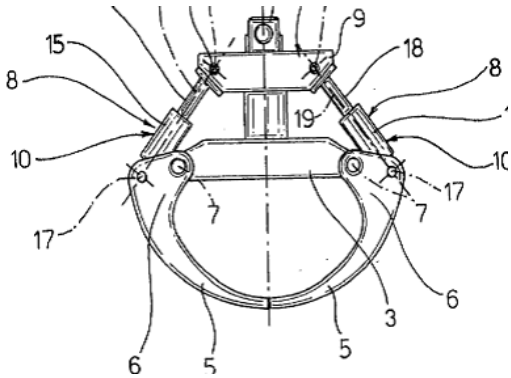

B66C 3/18

by electric motors

Definition statement

This place covers:

See for example US 5 622 468

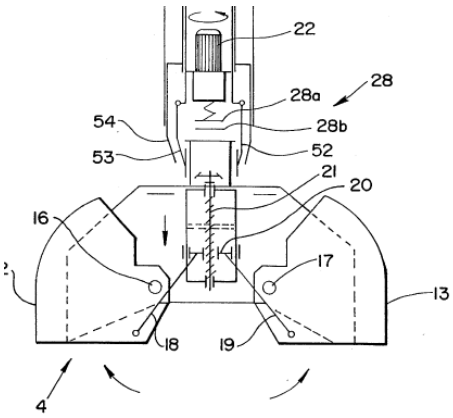

B66C 3/20

mounted on, or guided by, jibs (jibs B66C 23/64)

Definition statement

This place covers:

See for example US 2009/0250887

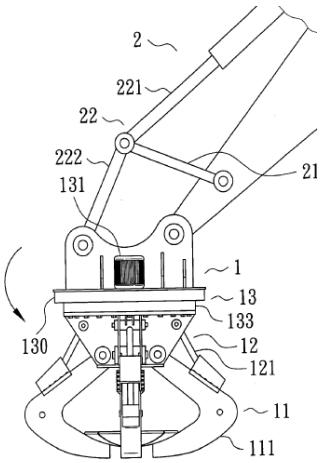

B66C 5/02

Fixed or travelling bridges or gantries, i.e. elongated structures of inverted L or of inverted U shape {or tripods}

Definition statement

This place covers:

See for example US 7 503 460

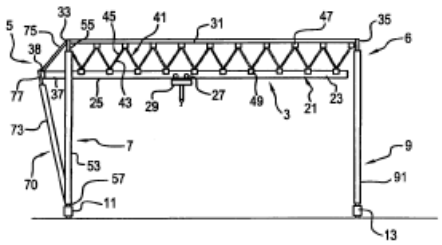

B66C 5/025

{Tripods}

Definition statement

This place covers:

See for example US 6 283 455

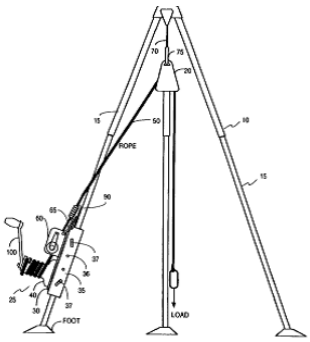

B66C 5/04

with runways or tracks supported for movements relative to bridge or gantry

Definition statement

This place covers:

See for example US 4 106 641

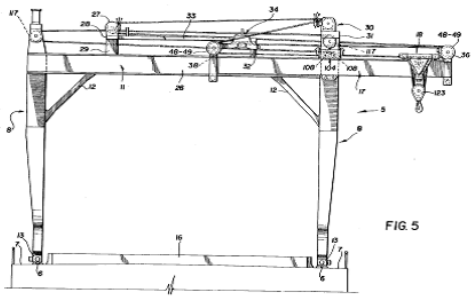

B66C 5/06

with runways or tracks supported for lateral swinging movements

Definition statement

This place covers:

See for example US 5 593 050

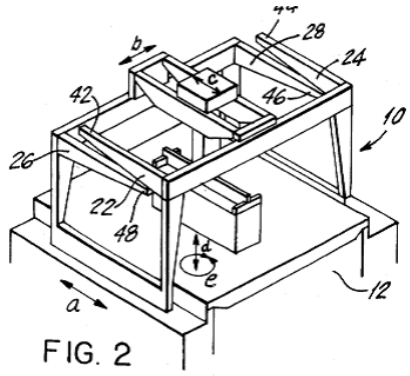

FIG. 2

B66C 5/08

with vertically invlinable runways or tracks

Definition statement

This place covers:

See for example US 4 762 240

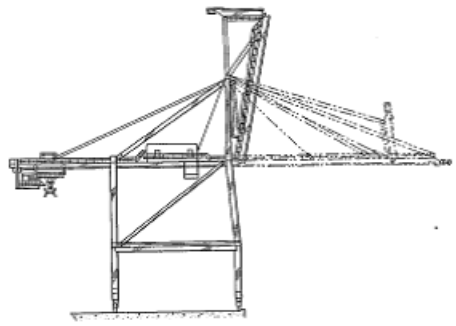

B66C 5/10

Portals, i.e. essentially circular or square platforms with three or more legs specially adapted for supporting slewing jib cranes

Definition statement

This place covers:

See for example US 2008/0237174

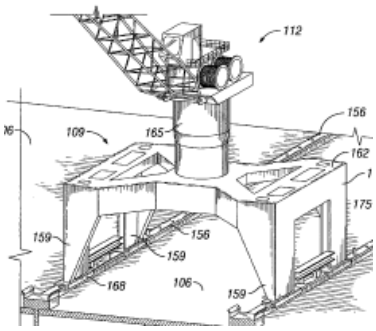

B66C 6/00

Girders, or track-supporting structures, specially adapted for cranes (base supporting structures with legs B66C 5/00; girders in general E04C 3/02)

Definition statement

This place covers:

See for example US 3 319 802

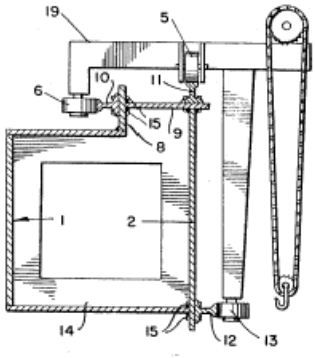

References

Limiting references

This place does not cover:

Runways or tracks for trolleys	B66C 7/00

B66C 7/02

for underhung trolleys or cranes

Definition statement

This place covers:

See for example US2002/0014568

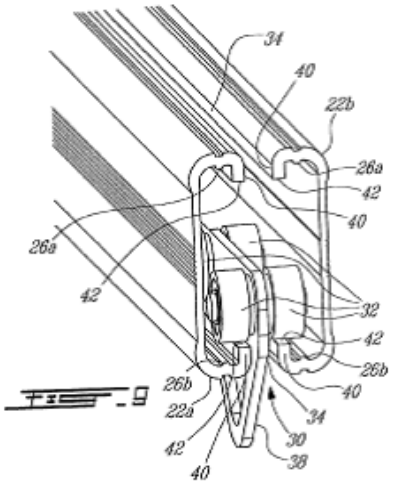

B66C 7/04

Trackway suspension

Definition statement

This place covers:

See for example US 2007/0186800

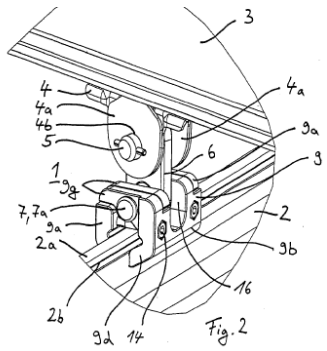

B66C 7/08

Constructional features of runway rails or rail mountings (of general application E01B)

Definition statement

This place covers:

Details of rails, mountings, suspension etc.

See for example US 3 335 955

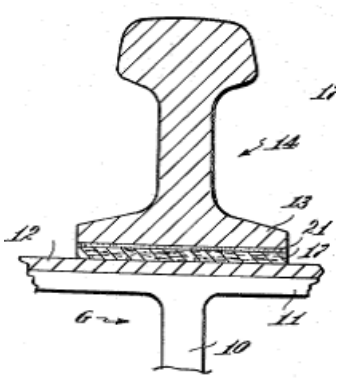

References

Limiting references

This place does not cover:

Devices for underhung trolleys	B66C 7/02

B66C 7/10

Arrangements or devices for extending runways or tracks

Definition statement

This place covers:

Extension parts with different section.

Extensions pivoted to or telescoped in end of track section.

See for example US 2006/0260502

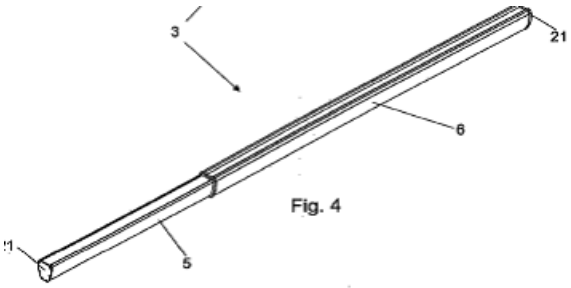

Fig. 4

References

Limiting references

This place does not cover:

Similar track sections joined to each other	B66C 7/14

B66C 7/12

Devices for changing direction of travel or for transferring from one runway to another; Crossings; Combinations of tracks of different gauges (transfer devices of general application E01B)

Definition statement

This place covers:

Devices on rails for allowing transfer.

See for example US 2003/0140816

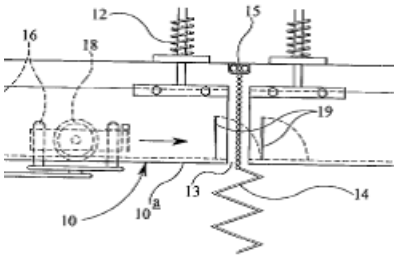

References

Limiting references

This place does not cover:

Devices on trolleys allowing transfer to other rail	B66C 9/04
Devices on trolleys allowing transfer to different gauge	B66C 9/06

B66C 7/14

Runway interlocking devices

Definition statement

This place covers:

Similar track sections joined to each other.

See for example US2010/0019055

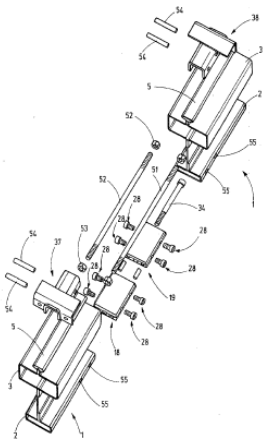

References

Limiting references

This place does not cover:

Extension parts with different section or pivoted /telescoping extensions	B66C 7/10

B66C 7/16

Devices specially adapted for limiting trolley or crane travel; Arrangements of buffer-stops (buffer-stops of interest apart from this application B61K 7/18; limit-switch arrangements, limit circuits B66D 1/56)

Definition statement

This place covers:

See for example US 6 216 601

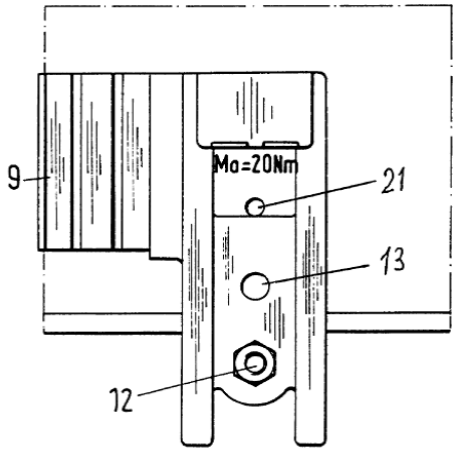

B66C 9/02

for underhung trolleys or cranes

Definition statement

This place covers:

Trolley suspension arrangements

See for example US US2011/0076125

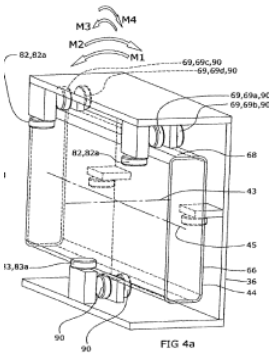

B66C 9/04

to facilitate negotiation of curves

Definition statement

This place covers:

Steering of wheeled cranes.

See for example US 6 206 127

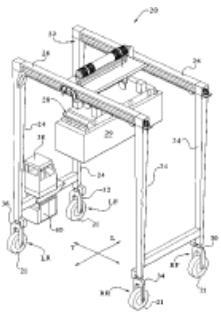

Wheel arrangements for running around curves on rails.

See for example US 5 623 879

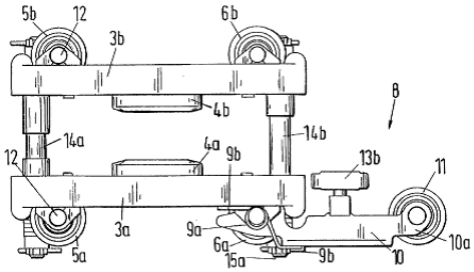

B66C 9/06

for more than one rail gauge

Definition statement

This place covers:

Trolleys adapted to run on different rails.

See for example EP 0 204 383

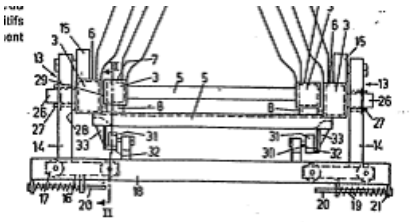

References

Limiting references

This place does not cover:

Devices on rails for allowing transfer	B66C 7/12

B66C 9/08

Runners; Runner bearings (wheels for railbound vehicles B60B)

Definition statement

This place covers:

See for example US 2008/0210654

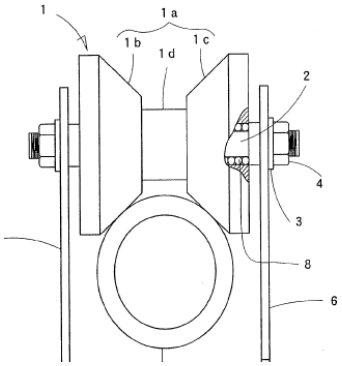

B66C 9/10

Undercarriages or bogies, e.g. end carriages, end bogies

Definition statement

This place covers:

Bogies for end of bridge of overhead cranes or bogies for wheeled cranes.

See for example US 5 161 730

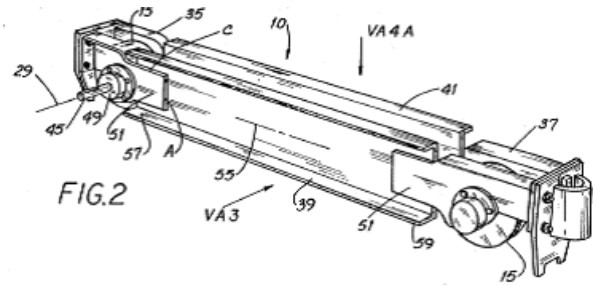

B66C 9/12

with load-distributing means for equalising wheel pressure

Definition statement

This place covers:

See for example US 3 877 391

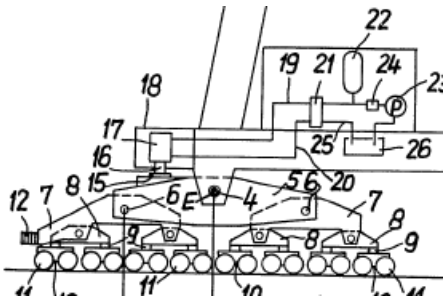

B66C 9/14

Trolley or crane travel drives (rope, cable, or chain drives for loads or trolleys B66C 11/16; control B66C 13/18)

Definition statement

This place covers:

See for example US 2008/0047919

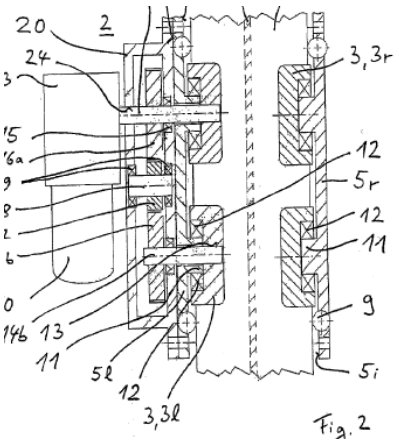

B66C 9/16

with means for maintaining alignment between wheels and track

Definition statement

This place covers:

See for example US 6 082 562

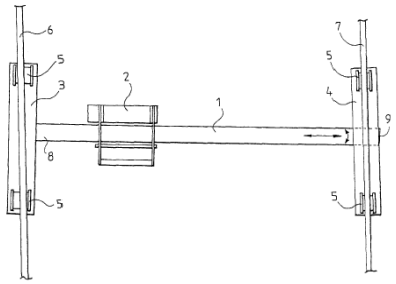

B66C 9/18

with means for locking trolleys or cranes to runways or tracks to prevent inadvertent movements

Definition statement

This place covers:

Braking devices.

See for example US 2001/0052439

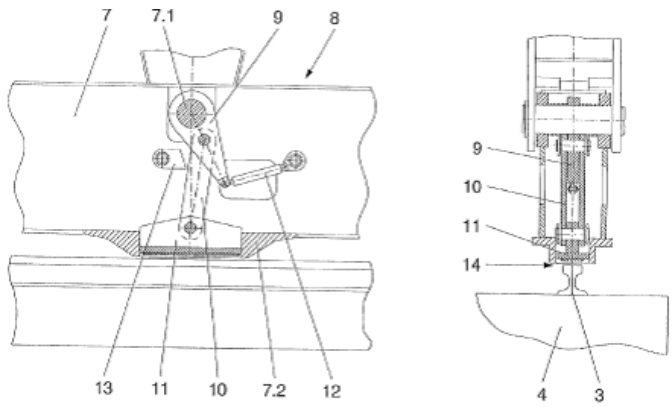

B66C 11/02

with operating gear or operator's cabin suspended, or laterally offset, from runway or track

Definition statement

This place covers:

See for example US 4 752 011

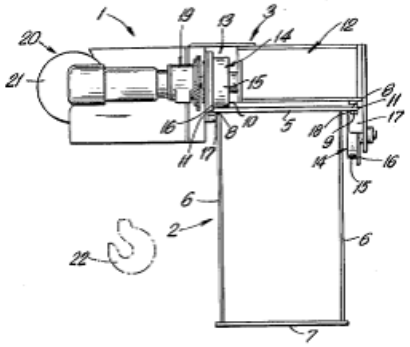

B66C 11/04

Underhung trolleys (power-operated hoists with driving motor and drum or barrel contained in a common housing B66D 3/20)

Definition statement

This place covers:

See for example WO 94/03388

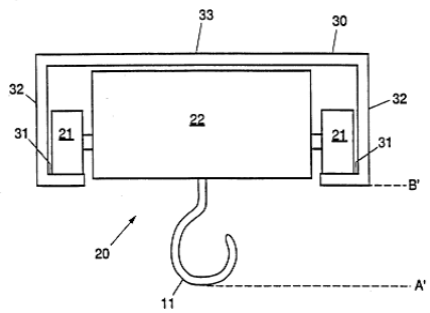

B66C 11/06

running on monorails (overhead railway systems B61B)

Definition statement

This place covers:

Smaller trolleys supported by a single rail.

See for example US 6 250 484

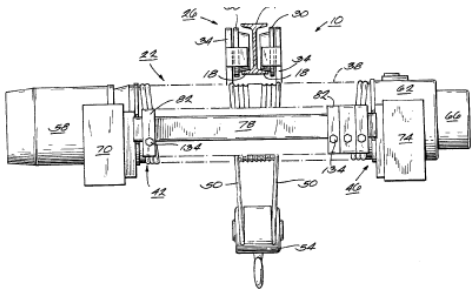

References

Informative references

Attention is drawn to the following places, which may be of interest for search:

Features of lifting arrangement	B66D 3/18

B66C 11/08

with turn-tables

Definition statement

This place covers:

See for example US 3 887 080

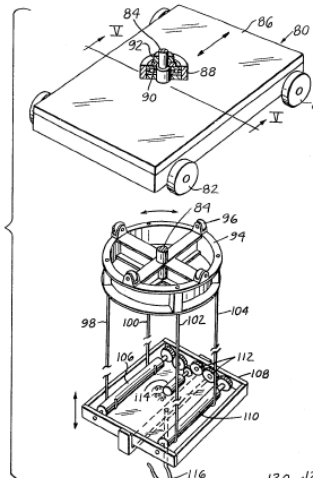

B66C 11/10

equipped with jibs (jib-cranes B66C 23/00)

Definition statement

This place covers:

See for example EP 1 288 156

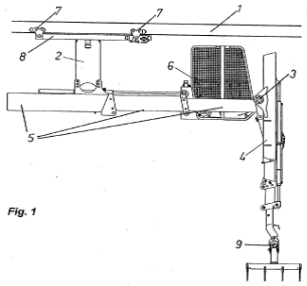

B66C 11/12

having hoisting gear adapted to special load-engaging elements and not otherwise provided for

Definition statement

This place covers:

For example devices using counterweights.

See for example US2003/0019828

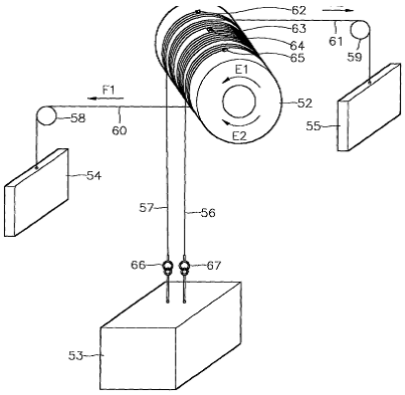

References

Limiting references

This place does not cover:

Elevators with counterweights	B66B

B66C 11/14

adapted to operate on crane or bridge structure of particular configuration, e.g. on reinforced concrete girders of rectangular cross-section

Definition statement

This place covers:

See for example US 2011/0006026

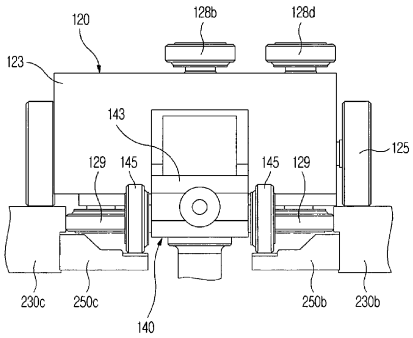

B66C 11/16

Rope, cable, or chain drives for trolleys; Combinations of such drives with hoisting gear

Definition statement

This place covers:

See for example US 6 250 486

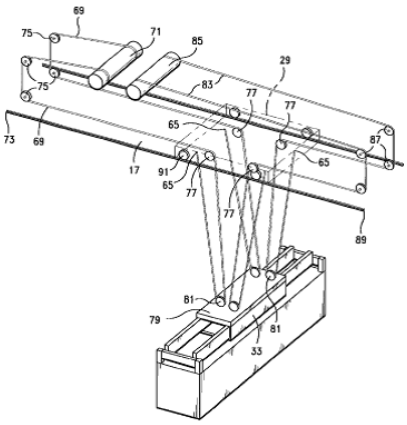

References

Limiting references

This place does not cover:

Drives for running gear, e.g. wheels	B66C 9/14

B66C 11/18

comprising endless ropes or cables

Definition statement

This place covers:

See for example US 5 765 981

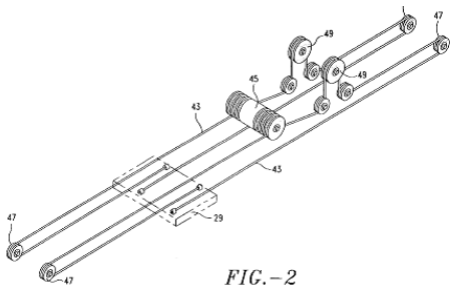

FIG.-2

B66C 11/20

Arrangements, e.g. comprising differential gears, enabling simultaneous or selective operation of travelling and hoisting gear; Arrangements using the same rope or cable for both travelling and hoisting, e.g. in Temperley cranes (power transmissions between driving motors and winch drums B66D 1/14)

Definition statement

This place covers:

See for example US 6 343 702

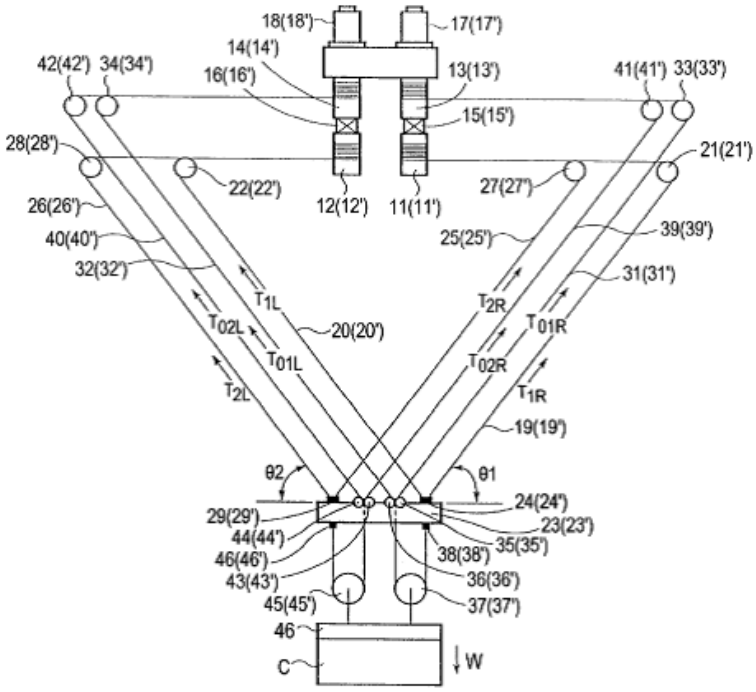

B66C 11/22

actuated pneumatically or hydraulically

Definition statement

This place covers:

See for example EP 0 081 935

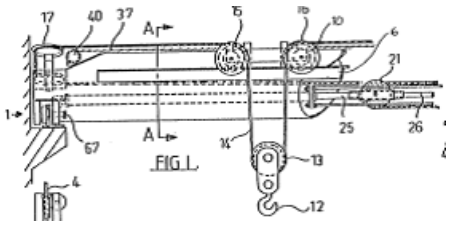

B66C 11/24

with means for locating or sustaining the loads or trolleys in predetermined positions; Hay hoists

Definition statement

This place covers:

See for example EP 0 063 724

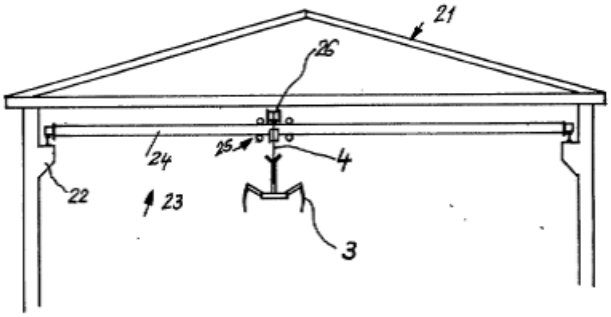

B66C 11/26

Abutments; Stop blocks; End stops

Definition statement

This place covers:

See for example DE 84 16 063 U1

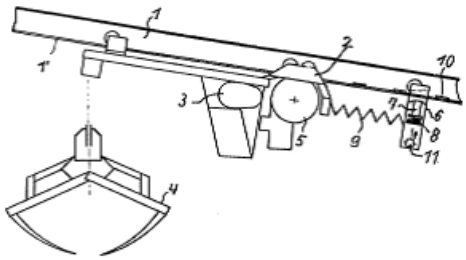

B66C 13/005

{Cranes carrying advertisements or the like}

Definition statement

This place covers:

See for example WO 97/34282

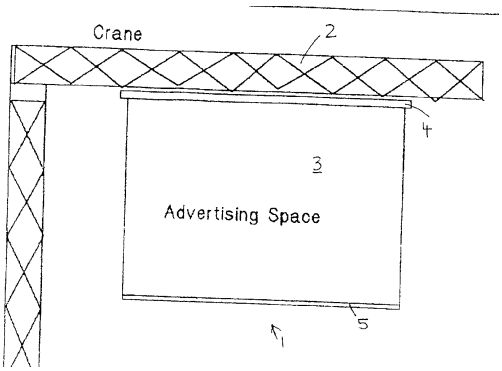

B66C 13/02

Devices for facilitating retrieval of floating objects, e.g. for recovering crafts from water (handling live-boats B63B; salvaging, or hauling-out on slipways, waterborne vessels B63C; winding mechanism controls B66D 1/52)

Definition statement

This place covers:

See for example WO2009/038468

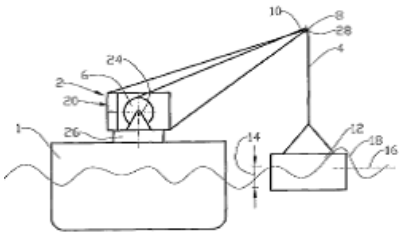

References

Limiting references

This place does not cover:

Winch controls for swell compensation	B66D 1/52

B66C 13/04

Auxiliary devices for controlling movements of suspended loads, or preventing cable slack

Definition statement

This place covers:

Controlling vertical load movements.

See for example US 4 930 828

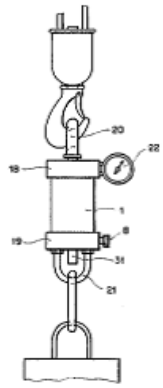

References

Limiting references

This place does not cover:

Controlling horizontal movements	B66C 13/06

B66C 13/06

for minimising or preventing longitudinal or transverse swinging of loads

Definition statement

This place covers:

Mechanical sway compensation systems.

See for example US 2007/0158290

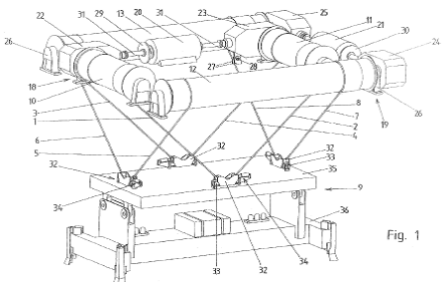

References

Limiting references

This place does not cover:

Reducing vertical load oscillation	B66C 13/04
Ensuring correct final load position	B66C 13/08

B66C 13/063

{electrical}

Definition statement

This place covers:

Electrical sway compensation systems.

See for example US 2010/0094464

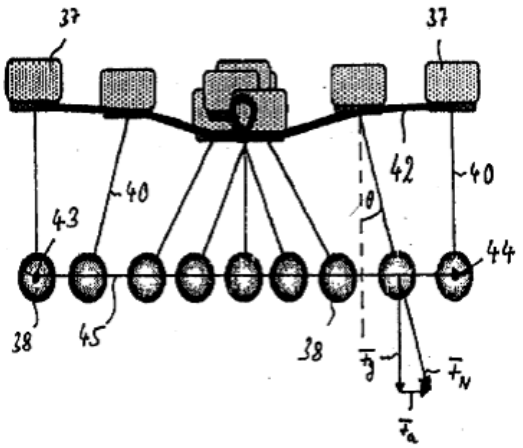

B66C 13/066

{for minimising vibration of a boom}

Definition statement

This place covers:

See for example EP 1 174 384

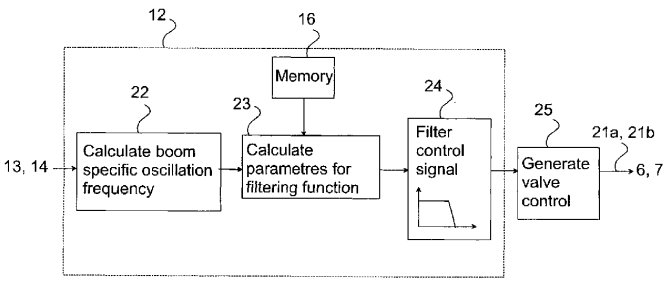

B66C 13/08

for depositing loads in desired attitudes or positions

Definition statement

This place covers:

Mechanical arrangements for accurate final load position or orientation.

See for example US2007/0284327

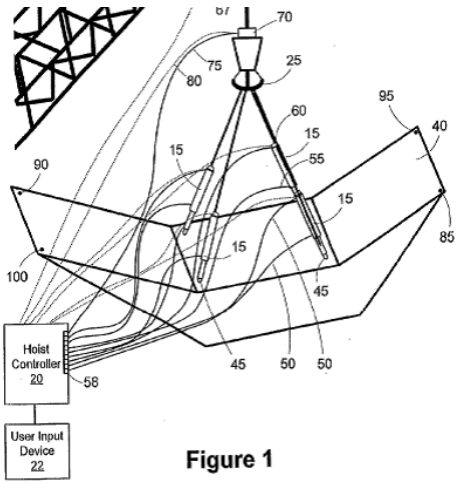

Figure 1

References

Limiting references

This place does not cover:

Anti-sway systems	B66C 13/06

B66C 13/085

{electrical}

Definition statement

This place covers:

Electrical arrangements for accurate final load position or orientation.

See for example US2005/0232733

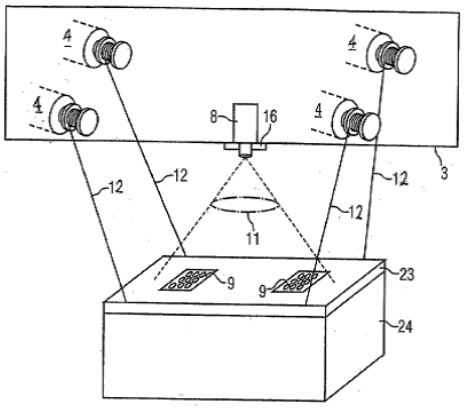

References

Limiting references

This place does not cover:

Anti-sway systems	B66C 13/063

B66C 13/10

for preventing cable slack (control devices for rope, cable, or chain winding mechanisms, e.g. for controlling tensions, B66D 1/40)

Definition statement

This place covers:

Devices to prevent cable from hanging loose, i.e. with no tension, by supporting or applying tension.

See for example US 2005/0218100

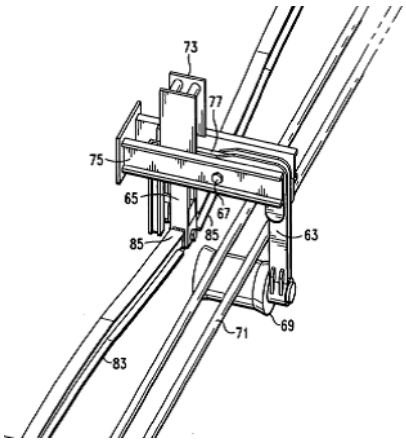

References

Limiting references

This place does not cover:

Anti-slack devices for winches	B66D 1/50

B66C 13/105

{electrical}

Definition statement

This place covers:

Anti-slack devices using electrical control, e.g. limit switches or tension measurement.

See for example US 4 487 741

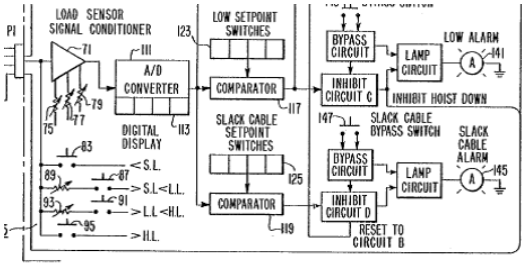

References

Limiting references

This place does not cover:

Anti-slack devices for winches	B66D 1/505

B66C 13/12

Arrangements of means for transmitting pneumatic, hydraulic, or electric power to movable parts of devices

Definition statement

This place covers:

Cable or hose arrangements.

See for example US 5 294 066

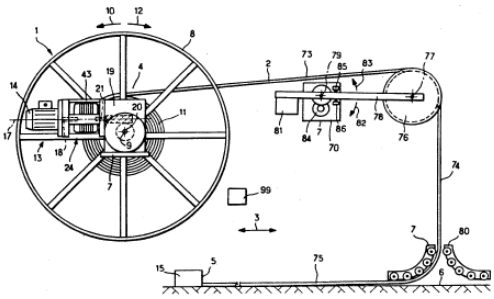

B66C 13/14

to load-engaging elements or motors associated therewith

Definition statement

This place covers:

Energy supply to load engaging elements, including local energy generation devices.

See for example US 5 280 880

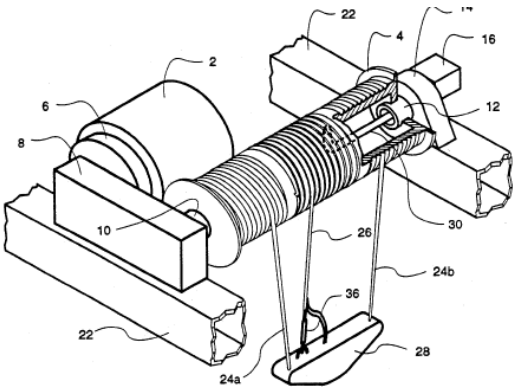

B66C 13/16

Applications of indicating, registering, or weighing devices (in crane hooks B66C 1/40; in safety gear B66C 15/00; weighing-apparatus G01G; remote indicating in general G08)

Definition statement

This place covers:

Load measurement, either directly or indirectly, e.g. via motor torque.

See for example US 2011/0066394

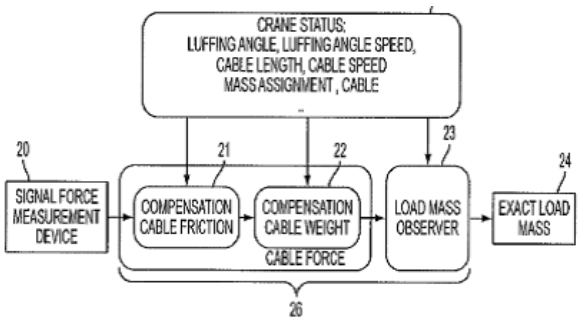

References

Limiting references

This place does not cover:

Load measurement on crane hook	B66C 1/40
Load measurement in connection with safety control	B66C 15/00

B66C 13/18

Control systems or devices (exclusively for rope, cable, or chain winding mechanisms B66D 1/40)

Definition statement

This place covers:

General control arrangements not fitting one of the following subgroups.

See for example US 6 269 635

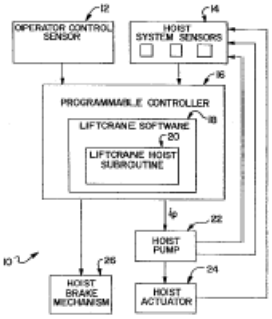

B66C 13/20

for non-electric drives (transmitting control pulses B66C 13/40)

Definition statement

This place covers:

Hydraulic or mechanical control devices.

See for example US 5 732 835

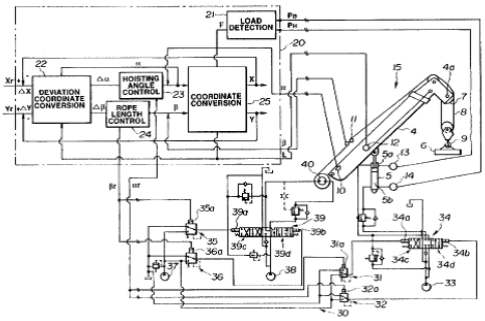

B66C 13/22

for electric drives (transmitting control pulses B66C 13/40; systems or devices of general application H02P)

Definition statement

This place covers:

See for example US 4 614 274

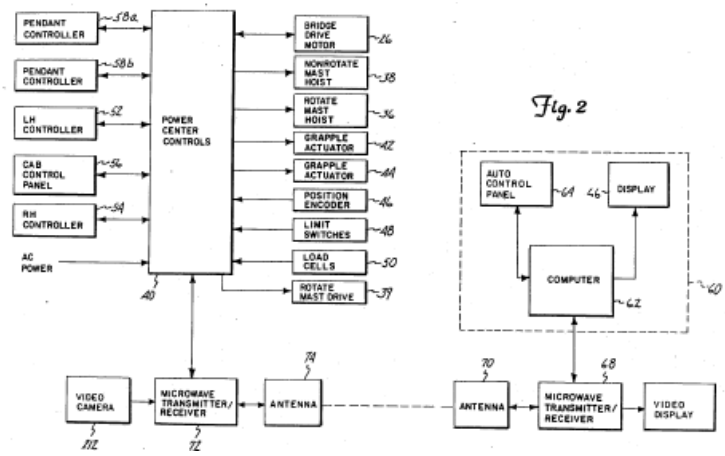

References

Limiting references

This place does not cover:

Controls for load lifting and lowering	B66C 13/23
Circuits for horizontal motion	B66C 13/30

B66C 13/23

Circuits for controlling the lowering of the load

Definition statement

This place covers:

Control of crane lowering and lifting drives.

See for example US 2011/0130863

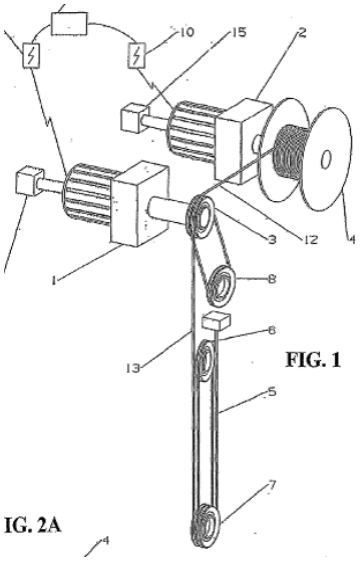

References

Limiting references

This place does not cover:

Control drives for winches	B66D 1/40

B66C 13/28

utilising regenerative braking for controlling descent of heavy loads and having means for preventing rotation of motor in the hoisting direction when load is released

Definition statement

This place covers:

Crane drives with regeneration of energy when lowering.

See for example US 5 936 375

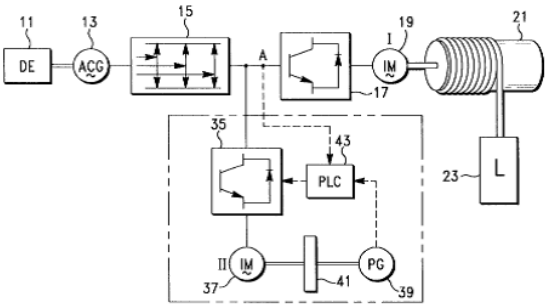

B66C 13/30

Circuits for braking, traversing, or slewing motors

Definition statement

This place covers:

Circuits for horizontal motion control.

See for example US 5 751 126

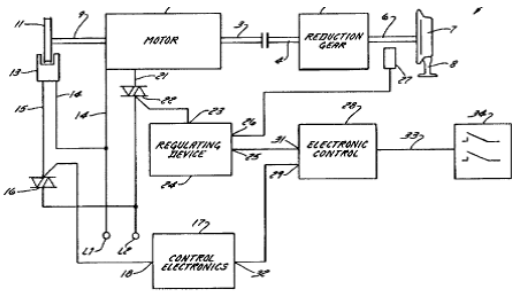

B66C 13/32

for operating grab bucket hoists by means of one or more electric motors used both for hosting and lowering the loads and for opening and closing the bucket jaws (other aspects or rope, cable, or chair winding mechanisms specially adapted for actuating grab buckets B66D 1/62)

Definition statement

This place covers:

See for example US4364704

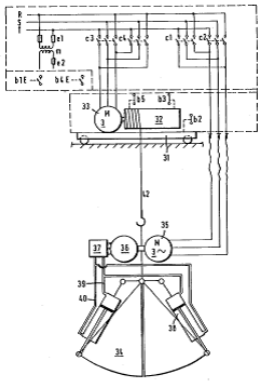

B66C 13/40

Applications of devices for transmitting control pulses; Applications of remote control devices (control in general G05)

Definition statement

This place covers:

Remote controls for cranes and winches, i.e. outside cabin, includes both hard wired and wireless units.

See for example US 2003/0164349

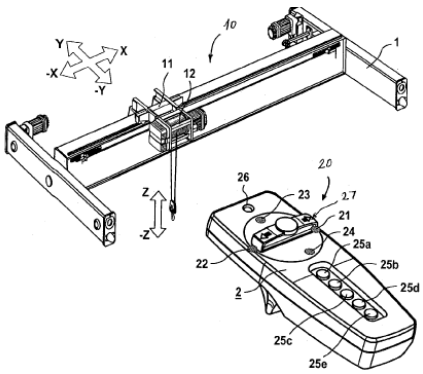

References

Limiting references

This place does not cover:

Control devices inside crane cabin	B66C 13/56

B66C 13/42

Hydraulic transmitters

Definition statement

This place covers:

Control arrangements using hydraulic signal transmission, e.g. between sensor and central unit.

B66C 13/44

Electrical transmitters

Definition statement

This place covers:

Control arrangements using electric signal transmission, e.g. between sensor and central unit.

See for example US 2009/0250424

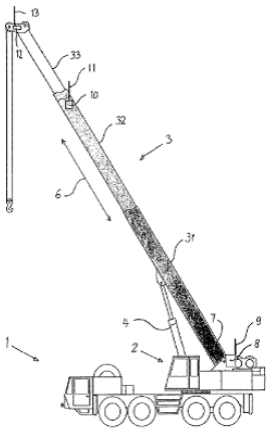

References

Limiting references

This place does not cover:

Remote controls	B66C 13/40

B66C 13/46

Position indicators for suspended loads or for crane elements

Definition statement

This place covers:

Sensors and cameras for detecting position of loads or parts of crane.

See for example US 2004/0015264

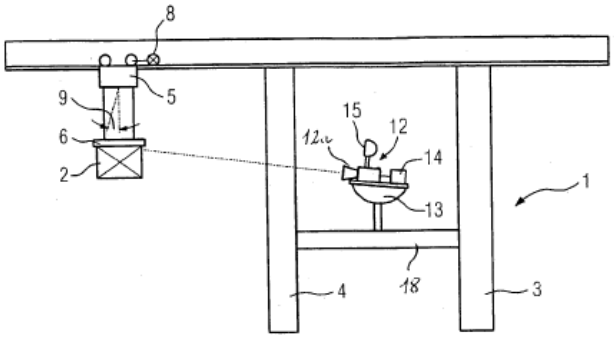

B66C 13/48

Automatic control of crane drives for producing a single or repeated working cycle; Programme control

Definition statement

This place covers:

Systems allowing the crane to carry out an automatic movement, for example based on a program or target position, includes path planning and stack optimisation.

See for example US 6 065 619

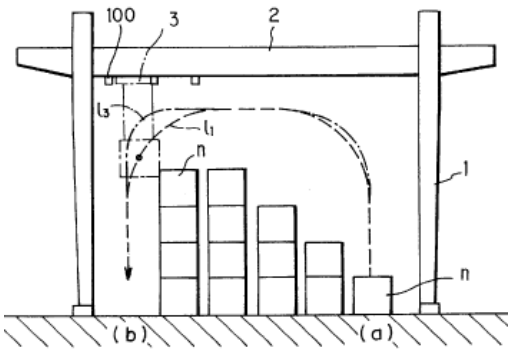

B66C 13/50

Applications of limit circuits or of limit-switch arrangements (for winding mechanisms B66D 1/56)

Definition statement

This place covers:

See for example US 2011/0089131

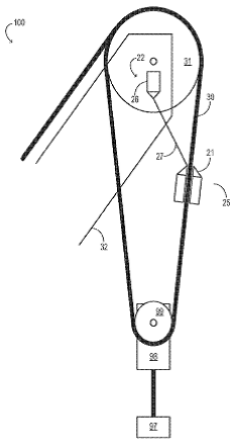

References

Limiting references

This place does not cover:

Winches	B66D 1/56
Portable lifting appliances	B66D 3/24

B66C 13/52

Details of compartments for driving engines or motors or of operator's stands or cabins

Definition statement

This place covers:

Engine and motor compartments.

See for example US 4 045 866

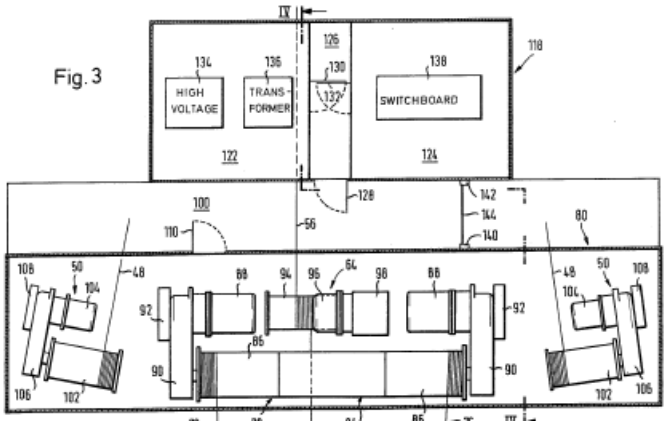

References

Limiting references

This place does not cover:

Operator's compartments	B66C 13/54

B66C 13/54

Operator's stands or cabins

Definition statement

This place covers:

Operator's compartments.

See for example EP 0 870 725

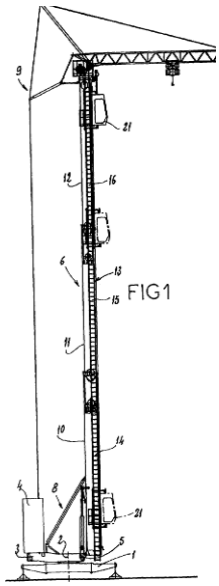

References

Limiting references

This place does not cover:

Operating devices	B66C 13/56
Operator's compartments for fork lift trucks	B66F 9/07545
Operator's compartments for soil shifting machines	E02F 9/16

B66C 13/56

Arrangements of handles or pedals

Definition statement

This place covers:

Control devices actuated by the operator.

See for example US 2007/0156280

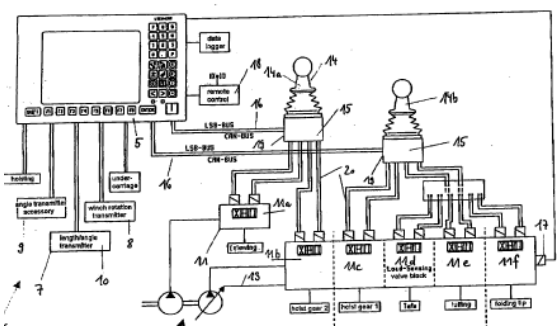

References

Limiting references

This place does not cover:

Remote controls, i.e. outside cabin	B66C 13/40
Controls for fork lift trucks	B66F 9/20
Controls for excavators	E02F 9/20
General control handles	G05G 9/00

B66C 15/00

Safety gear (for rope, cable, or chain winding mechanisms B66D 1/54)

Definition statement

This place covers:

General crane safety devices not covered by one of the following subgroups

for example component testing.

US 4 643 031

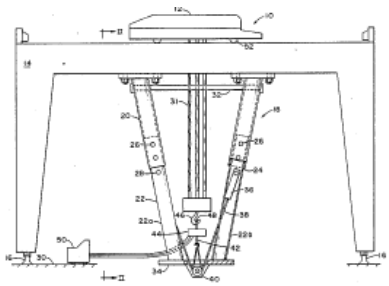

References

Limiting references

This place does not cover:

Safety devices for boom cranes	B66C 23/88
Safety devices for winches	B66D 1/54

B66C 15/02

for retaining load-engaging elements in the event of rope or cable breakage

Definition statement

This place covers:

See for example US 5 735 507

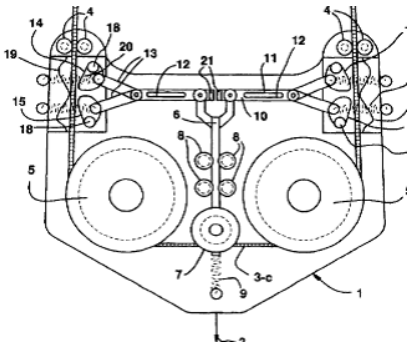

B66C 15/04

for preventing collisions, e.g. between cranes or trolleys operating on the same track

Definition statement

This place covers:

See for example DE 10 2009 006 103

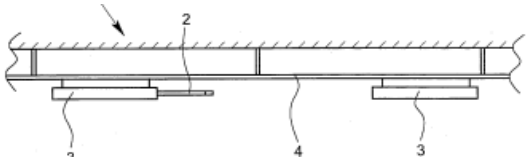

B66C 15/045

{electrical}

Definition statement

This place covers:

Electrical anti-collision devices.

See for example US 3 167 753

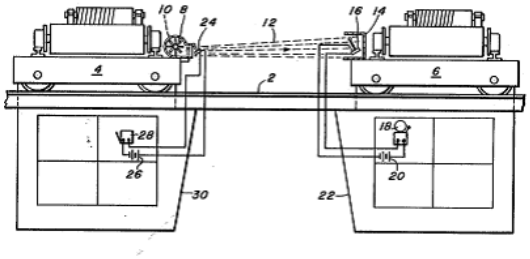

B66C 15/06

Arrangements or use of warning devices

Definition statement

This place covers:

Non-electric devices, e.g. with visual indication

See for example US 2007/0205618

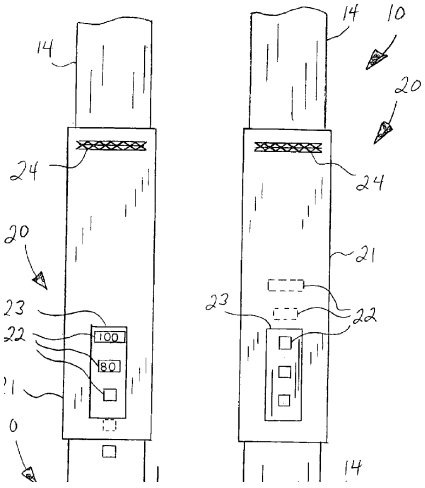

B66C 15/065

{electrical}

Definition statement

This place covers:

See for example EP 1 221 426

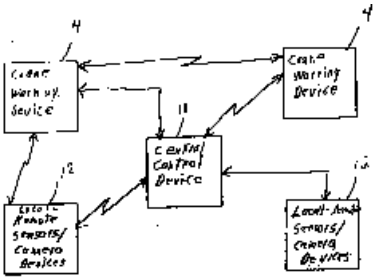

B66C 17/04

with lifting beams, e.g. slewable beams, carrying load-engaging elements, e.g. magnets, hooks (constructions of load-engaging elements B66C 1/00, B66C 3/00)

Definition statement

This place covers:

Devices where the load carrying element is connected to the lifting beam, i.e. not suspended by cables.

See for example EP 0 314 632

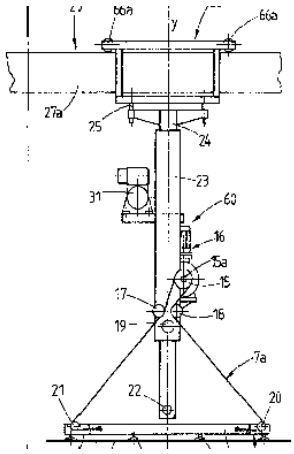

B66C 17/06

specially adapted for particular purposes, e.g. in foundries, forges; combined with auxiliary apparatus serving particular purposes (B66C 17/04 takes precedence)

Definition statement

This place covers:

Specially adapted devices, i.e. with particular mechanical features making them especially suitable for a particular application not covered by the following subgroups.

B66C 17/08

for charging treatment chambers, e.g. furnaces, kilns, ovens (charging furnaces in general F27D 3/00)

Definition statement

This place covers:

See for example EP 2 275 764

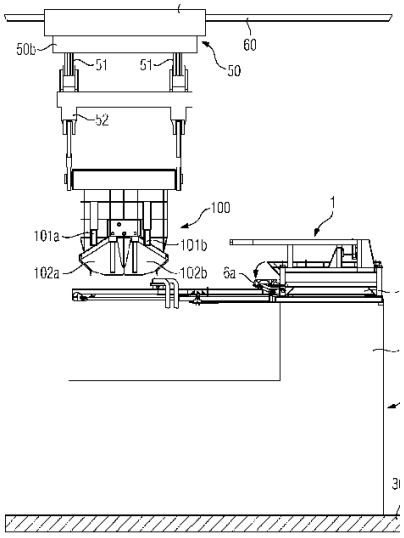

B66C 17/10

for transporting ladles

Definition statement

This place covers:

See for example US 3 874 513

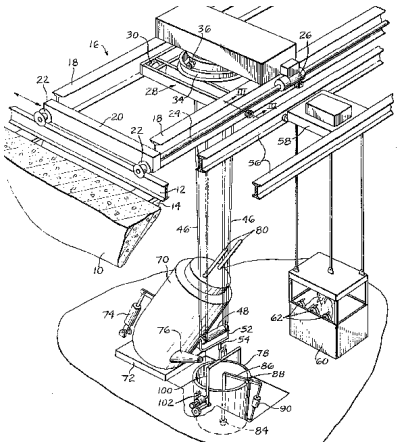

B66C 17/12

for handling workpieces, e.g. ingots, which require to be supported temporarily within, or withdrawn from, a treatment chamber, e.g. tong cranes, soaking-pit cranes, stripper cranes (for manipulating ingots during forging B66C 17/18; grippers for handling or stripping casting or ingots during manufacture B22D 29/00)

Definition statement

This place covers:

See for example US 4 736 971

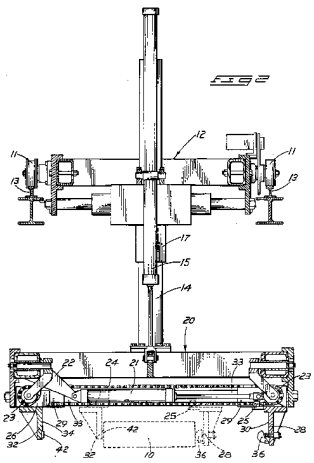

B66C 17/14

Tong cranes with means for moving article-pushers relative to the tongs

Definition statement

This place covers:

See for example DE 1 181 866 B

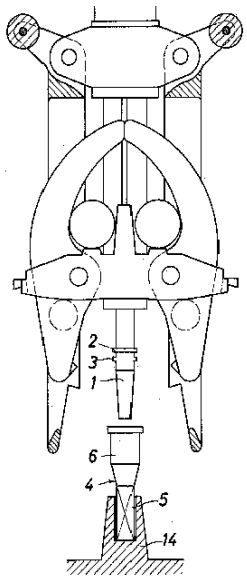

B66C 17/16

Tong cranes with means for turning the tongs about a vertical axis

Definition statement

This place covers:

See for example DE 1 109 196 B

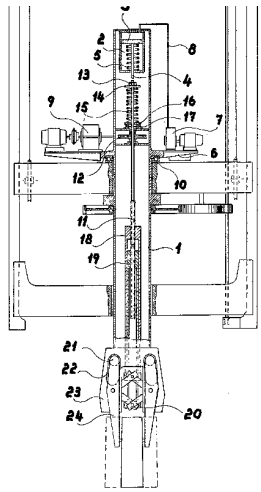

B66C 17/18

for manipulating workpieces during forging operations (work-pieces manipulators in forging machines B21J 13/10)

Definition statement

This place covers:

See for example DE 35 08 195

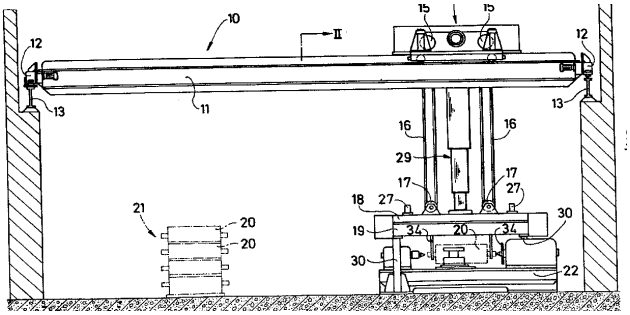

B66C 17/20

for hoisting or lowering heavy load carriers, e.g. freight containers, railway wagons

Definition statement

This place covers:

See for example US 5 803 280

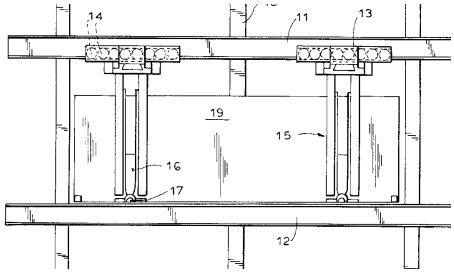

References

Limiting references

This place does not cover:

Gantry cranes or straddle carriers	B66C 19/00

B66C 17/22

for hoisting or lowering locomotives

Definition statement

This place covers:

See for example US 1 497 961

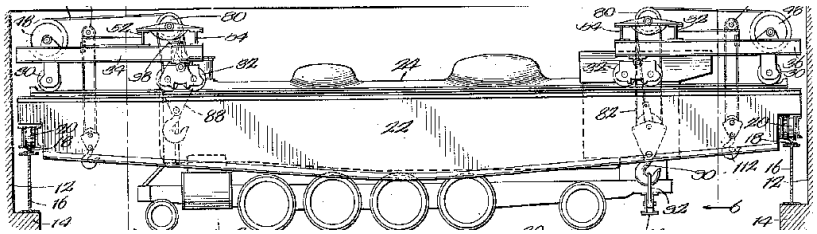

B66C 17/26

combined with auxiliary apparatus, e.g. log saws, pushers for unloading vehicles, means for shunting railway vehicles

Definition statement

This place covers:

See for example US 2011/0142590

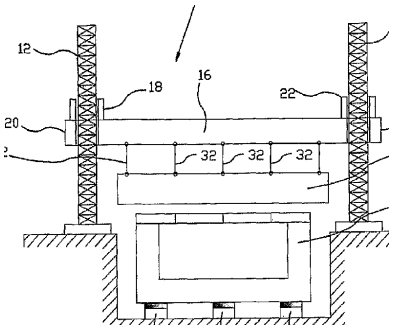

B66C 19/00

Cranes comprising trolleys or crabs running on fixed or movable bridges or gantries (B66C 17/00 takes precedence; base supporting structures with legs B66C 5/00; jib cranes B66C 23/00)

Definition statement

This place covers:

Gantry cranes not covered by the following subgroups.

See for example US 5 405 029

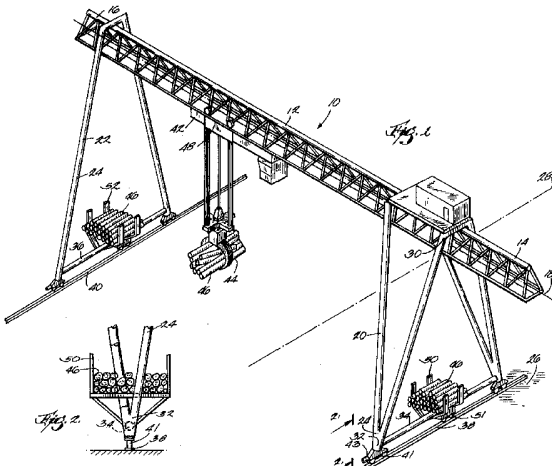

B66C 19/002

{Container cranes (B66C 19/007 takes precedence)}

Definition statement

This place covers:

Gantry cranes for containers, i.e. static cranes or cranes with wheels which are static when handling loads.

See for example US 2009/0191028

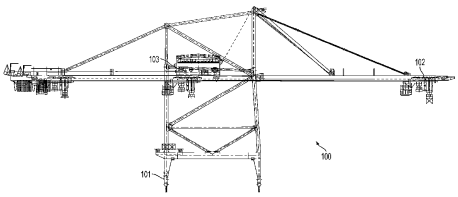

References

Limiting references

This place does not cover:

Straddle carriers for containers	B66C 19/007

B66C 19/005

{Straddle carriers (B66C 19/007 takes precedence)}

Definition statement

This place covers:

Straddle carriers for loads other than containers, e.g. boats.

See for example US 5 893 471

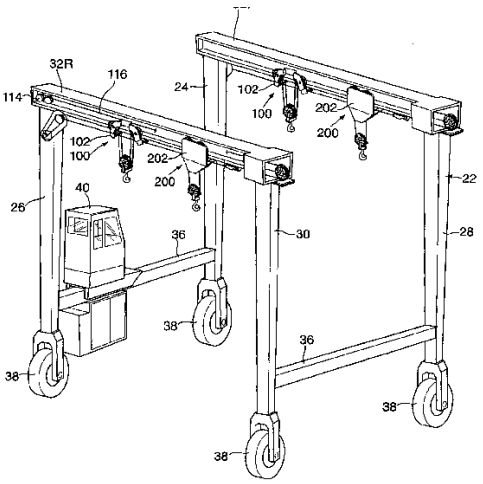

References

Limiting references

This place does not cover:

Straddle carriers for containers	B66C 19/007

B66C 19/007

{for containers}

Definition statement

This place covers:

Straddle carriers for containers, i.e. wheeled devices which carry containers around ports.

See for example EP 1 829 810

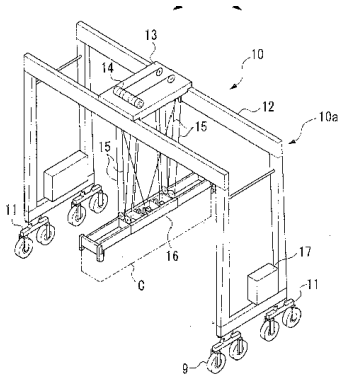

References

Limiting references

This place does not cover:

Gantry cranes for containers	B66C 19/002

B66C 19/02

collapsible {(B66C 19/002, B66C 19/005 takes precedence)}

Definition statement

This place covers:

Easily dismantlable gantry cranes.

See for example US2007/0163982

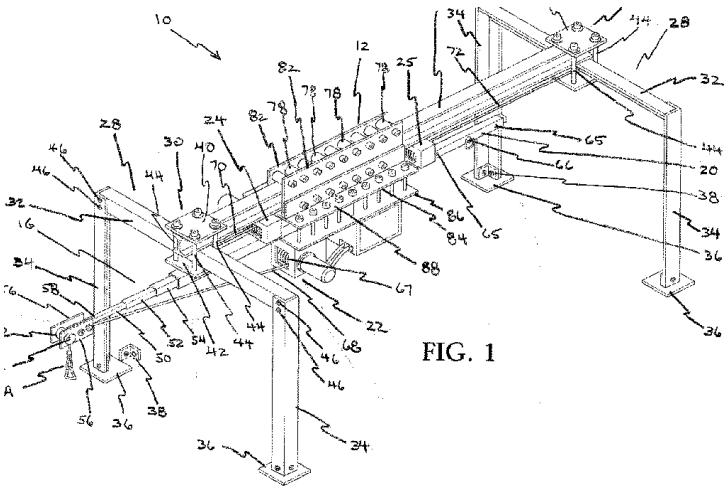

FIG. 1

B66C 21/00

Cable cranes, i.e. comprising hoisting devices running on aerial cable-ways (rope or cable drives for trolleys, combinations of such drives with hoisting gear B66C 11/16; railway systems B61B; rope or cable winding mechanisms B66D 1/00)

Definition statement

This place covers:

Devices not falling into one of the following subgroups.

See for example US 7 234 605

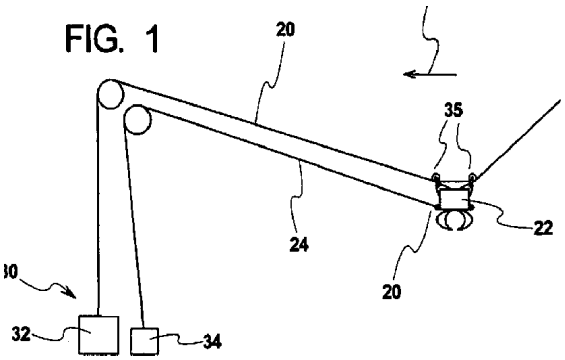

B66C 21/02

with cable-ways supported on framework swingably connected to groundengaging elements

Definition statement

This place covers:

Cable cranes where one support for the end of the cable is pivotable.

See for example GB 130 008

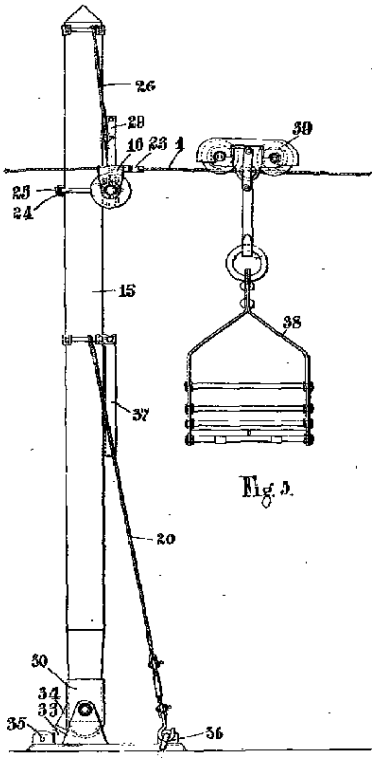

B66C 21/04

with cable-ways supported at one end or both ends on bodily movable framework, e.g. framework mounted on rail track

Definition statement

This place covers:

Cable cranes where one end of the cable is not fixed.

See for example US 5 816 636

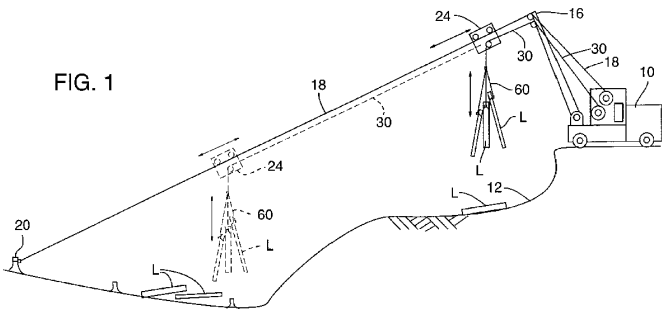

B66C 21/06

with one end supported on a framework movable in a curved, e.g. circular, path and the other end by a column rotatable around a vertical axis

Definition statement

This place covers:

See for example DE 30 37 894

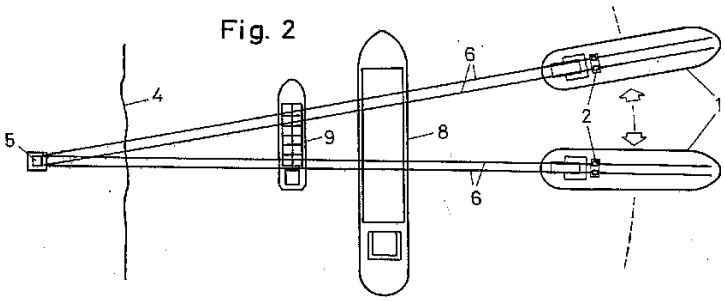

B66C 21/08

Sag carriers or rope trolleys, suspended or not, e.g. fixed but offering clearance for travelling gear

Definition statement

This place covers:

Arrangements for supporting cables.

See for example US 4 355 727

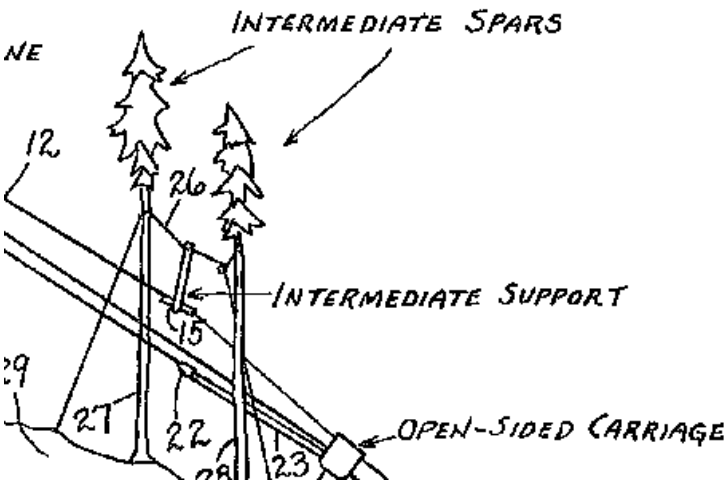

B66C 21/10

travelling

Definition statement

This place covers:

Supports which are movable along the cable.

See for example GB 374 921

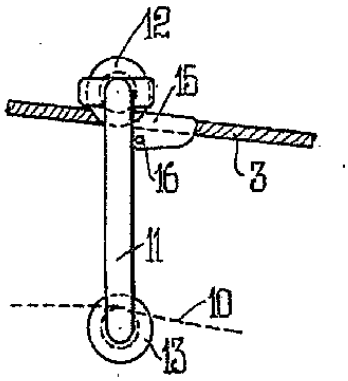

B66C 23/00

Cranes comprising essentially a beam, boom, or triangular structure acting as a cantilever and mounted for translatory of swinging movements in vertical or horizontal planes or a combination of such movements, e.g. jib-cranes, derricks, tower cranes (base supporting structures with legs B65C 5/00)

Special rules of classification

Stationary cranes are classified in B66C 23/00 - B66C 23/24.

Tower type cranes (which may be mobile) are classified in B66C 23/26 - B66C 23/34.

Mobile cranes are classified in B66C 23/36 and later subgroups.

Groups B66C 23/54 onwards apply to all types of crane.

B66C 23/005

{with balanced jib, e.g. pantograph arrangement, the jib being moved manually}

Definition statement

This place covers:

See for example US 5 203 837

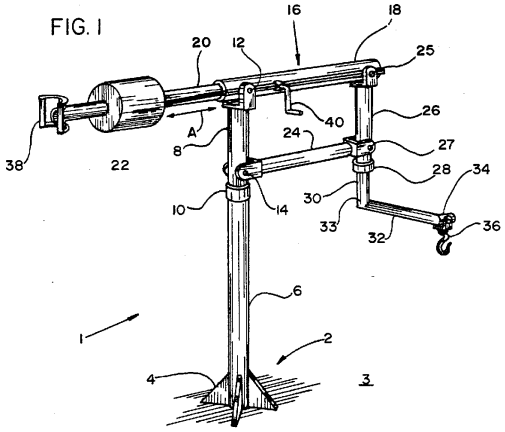

B66C 23/02

with non-adjustable and non-inclinable jibs mounted solely for slewing movements

Definition statement

This place covers:

Jib cranes with a fixed vertical column mounted on the ground as the sole support, with a jib mounted for slewing at the top of the column, i.e. the column does not rotate and the inclination of the jib can not be altered.

References

Limiting references

This place does not cover:

Jib cranes where the column also rotates or the jib inclination can be altered	B66C 23/16
Jib cranes which are supported by other means, e.g. additional support from a building	B66C 23/20
Mobile cranes	B66C 23/36
Vehicle mounted cranes	B66C 23/44
Small cranes on wheels	B66C 23/48

Special rules of classification

This group is only used if the following subgroups are not applicable. Documents may be classified in more than one subgroup.

B66C 23/022

{Pivot axis common with column}

Definition statement

This place covers:

Jibs pivoting around the centre of the column.

See for example WO 2009/003554

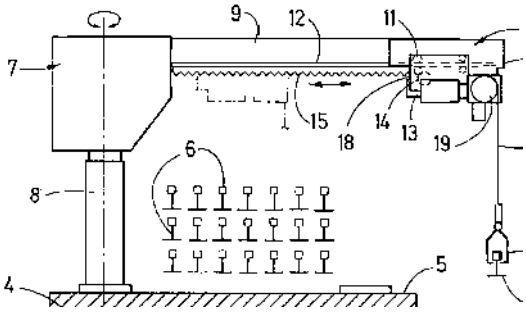

B66C 23/025

{with particular mounting for base of column}

Definition statement

This place covers:

See for example EP 1 460 024

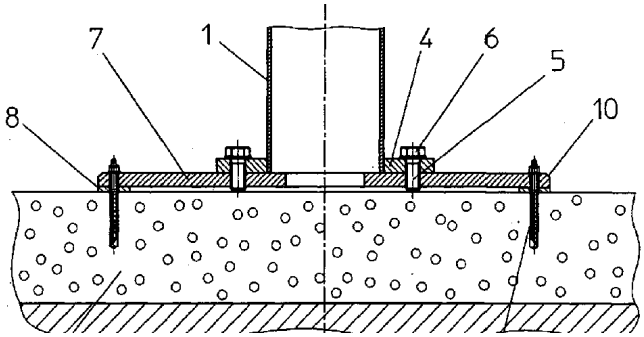

B66C 23/027

{Pivot axis separated from column axis}

Definition statement

This place covers:

Jibs whose pivot is not in line with the axis of the column.

See for example US 6 367 855

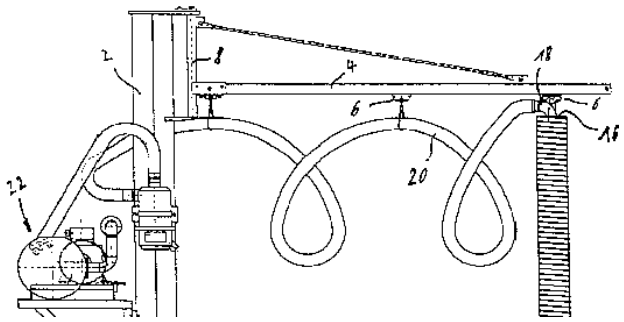

B66C 23/04

with jibs the effective length of which is variable in operation, e.g. longitudinally displaceable, extensible

Definition statement

This place covers:

See for example US 5 509 638

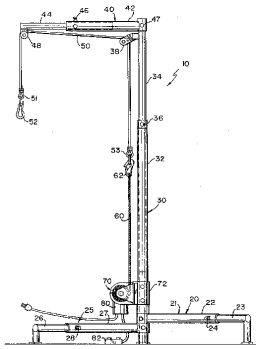

References

Limiting references

This place does not cover:

Telescopic booms e.g. for mobile cranes	B66C 23/701

B66C 23/06

with jibs mounted for jibbing or luffing movements

Definition statement

This place covers:

Fixed cranes with luffing jibs not covered by one of the subgroups B66C 23/08 - B66C 23/14.

References

Limiting references

This place does not cover:

Column mounted luffing jibs	B66C 23/16
Derricks	B66C 23/60
Luffing mechanisms	B66C 23/82

B66C 23/08

and adapted to move the loads in predetermined paths

Definition statement

This place covers:

Mechanical arrangements for following a particular non-horizontal path.

See for example DE 44 15 029

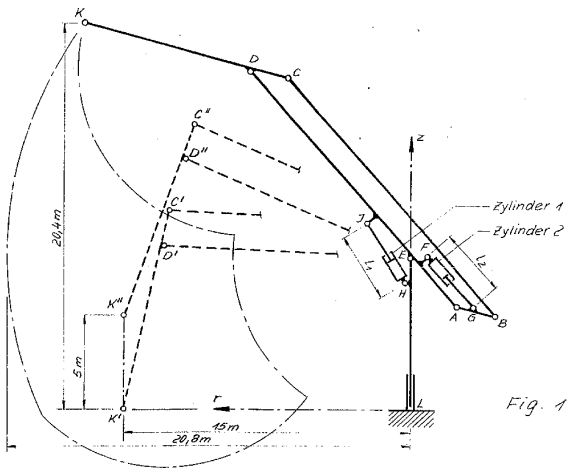

References

Limiting references

This place does not cover:

Control devices for particular paths	B66C 13/48

B66C 23/10

the paths being substantially horizontal; Level-luffing jib-cranes

Definition statement

This place covers:

See for example US 3 884 359

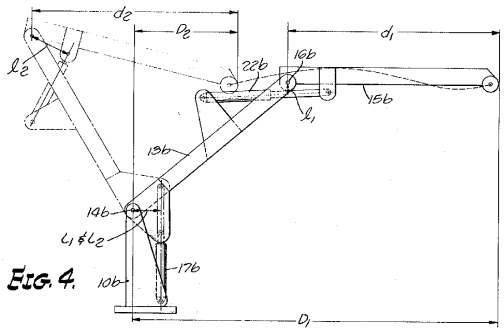

B66C 23/12

with means for automatically varying the effective length of the hoisting rope or cable

Definition statement

This place covers:

See for example GB 1 392 223

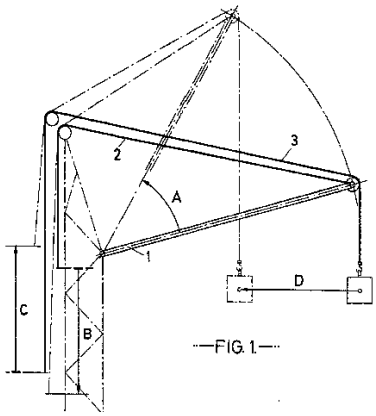

B66C 23/14

with means, e.g. pantograph arrangements, for varying jib configuration

Definition statement

This place covers:

See for example GB 985 801

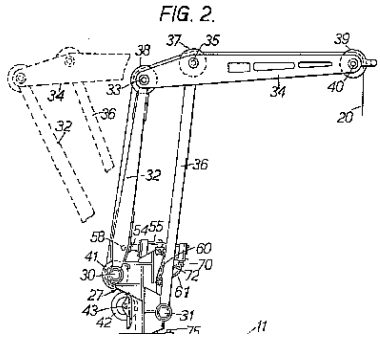

B66C 23/16

with jibs supported by columns, e.g. towers having their lower end mounted for slewing movements

Definition statement

This place covers:

Jib cranes with a fixed vertical column mounted on the ground as the sole support, includes cranes with a jib mounted for slewing at the centre or bottom of the column, i.e. at least part of the column rotates. the jib may or may not be inclinable.

See for example US 3 358 849

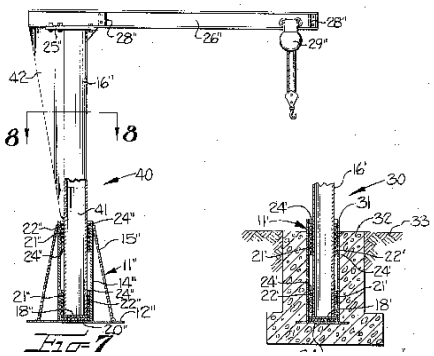

References

Limiting references

This place does not cover:

Jib cranes with a jib mounted for slewing at the top of the column, i.e. the column does not rotate and the inclination of the jib can not be altered.	B66C 23/02
Jib cranes which are supported by other means, e.g. additional support from a building	B66C 23/20
Vehicle mounted cranes	B66C 23/44

Small cranes on wheels	B66C 23/48
Derrick cranes	B66C 23/60

B66C 23/163

{where only part of the column rotates, i.e. at least the bottom part is fixed}

Definition statement

This place covers:

See for example US 3 181 707

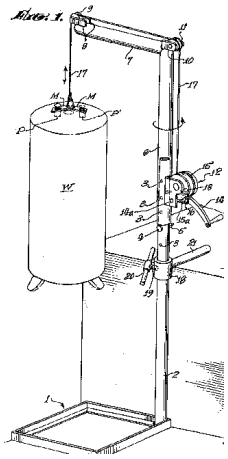

References

Limiting references

This place does not cover:

Cranes where all the column is fixed	B66C 23/02

B66C 23/166

{Simple cranes with jibs which may be fixed or can slew or luff}

Definition statement

This place covers:

Small cranes without wheels.

See for example US 2005/0161422

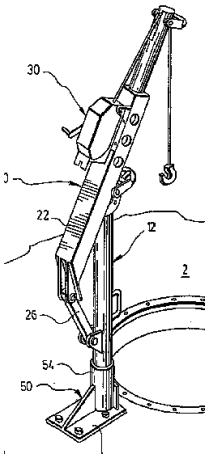

B66C 23/18

specially adapted for use in particular purposes

Definition statement

This place covers:

Cranes with jibs for specific applications not covered by the following groups B66C 23/20 - B66C 23/52.

See for example US 2001/0051074

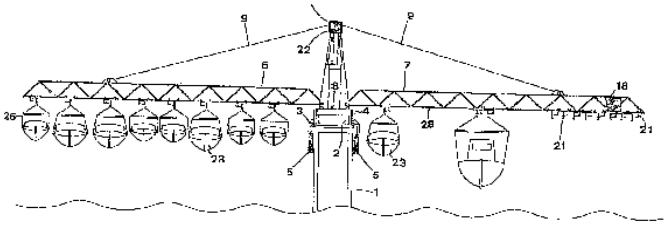

B66C 23/185

{for use erecting wind turbines (B66C 23/207 takes precedence)}

Definition statement

This place covers:

See for example US 2005/0211653

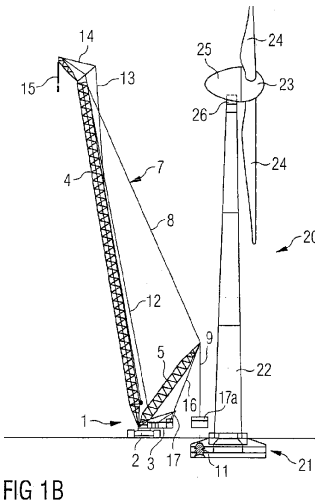

FIG 1B

References

Limiting references

This place does not cover:

Load connecting element for lifting wind turbines	B66C 1/108
Cranes supported on or by wind turbines	B66C 23/207

B66C 23/20

with supporting couples provided by walls of buildings or like structures

Definition statement

This place covers:

Jib cranes which are not supported only by a simple foot on the ground, but (also) by other means, e.g. additional support from a building, which do not fit one of the following subgroups.

References

Limiting references

This place does not cover:

Vehicle mounted cranes	B66C 23/44
Small cranes on wheels	B66C 23/48

B66C 23/201

{with supporting couples provided from above, e.g. by ceilings of buildings}

Definition statement

This place covers:

Supported either from only above or from both above and below.

See for example US 4 096 952

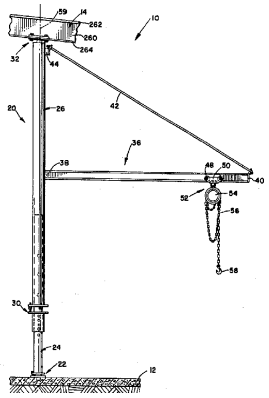

References

Limiting references

This place does not cover:

Cranes supported in window openings	B66C 23/22

B66C 23/202

{with supporting couples provided from below, e.g. by floors of buildings}

Definition statement

This place covers:

Cranes supported only from below, but requiring extra support, i.e. not merely mounted by a simple crane foot.

See for example US 2 382 299

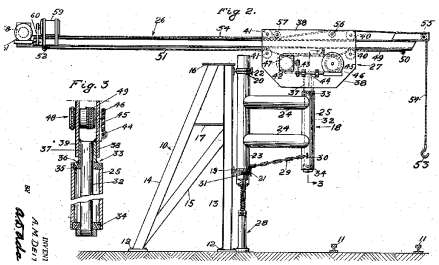

References

Limiting references

This place does not cover:

Cranes supported both from below and above	B66C 23/201

B66C 23/203

{with supporting couples provided by posts, e.g. scaffolding, trees or masts}

Definition statement

This place covers:

See for example US 4 880 345

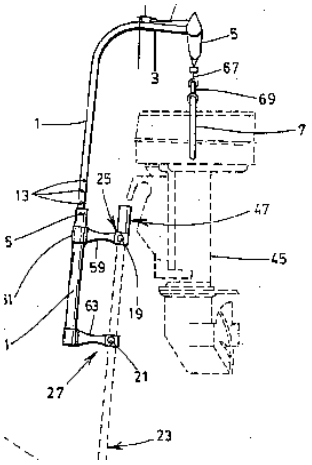

References

Limiting references

This place does not cover:

Cranes attached to wind turbines	B66C 23/207

B66C 23/205

{for use on top of roofs}

Definition statement

This place covers:

See for example US 3 671 015

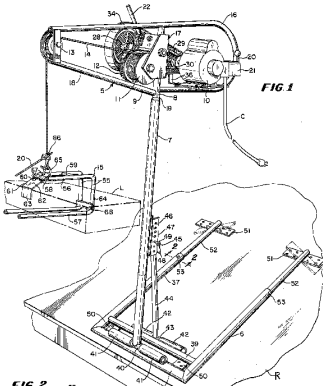

B66C 23/206

{with supporting couples provided by iso containers}

Definition statement

This place covers:

Cranes mounted on or in containers

See for example EP 2 196 427

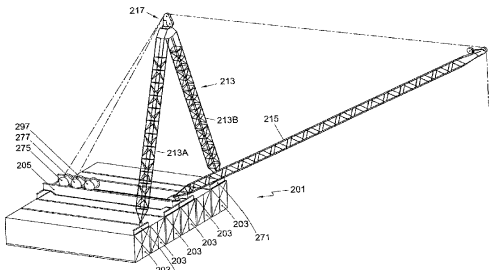

B66C 23/207

{with supporting couples provided by wind turbines}

Definition statement

This place covers:

Mounted on or supported by wind turbines or for erecting wind turbines.

See for example EP1 677 007

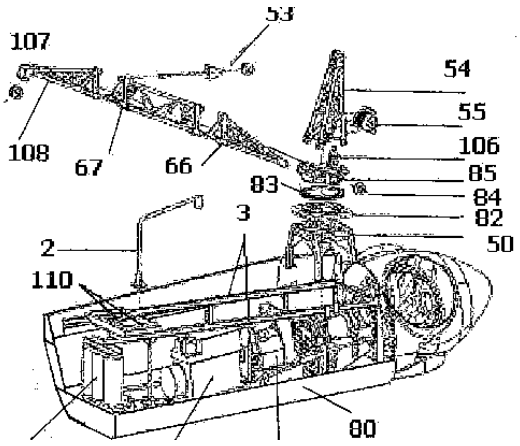

References

Limiting references

This place does not cover:

Load connecting element for lifting wind turbines	B66C 1/108
Cranes not supported by the wind turbine	B66C 23/185

B66C 23/208

{with supporting couples provided from the side, e.g. by walls of buildings}

Definition statement

This place covers:

Cranes fixed to walls, i.e. which do not move relative to the wall.

See for example GB 2 037 701

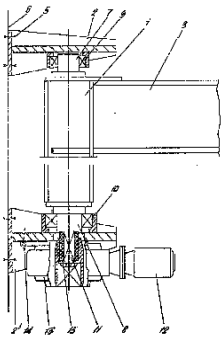

References

Limiting references

This place does not cover:

Cranes which can run along walls	B66C 23/24

B66C 23/22

Window cranes, i.e. adapted to be supported in window openings

Definition statement

This place covers:

See for example US 2008/0035594

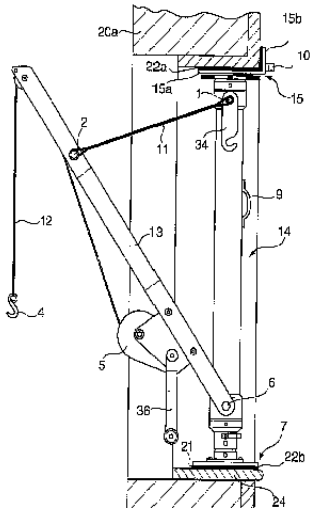

B66C 23/24

Mobile wall cranes

Definition statement

This place covers:

Cranes with a jib which runs along a wall.

See for example US 3 050 195

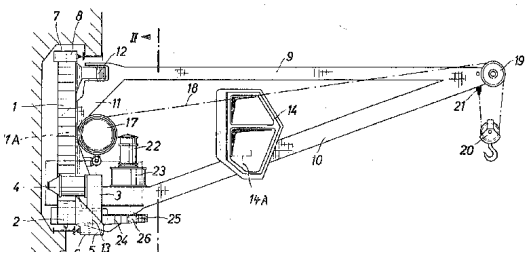

References

Limiting references

This place does not cover:

Cranes fixed to walls, i.e. which do not move relative to the wall	B66C 23/208

B66C 23/26

for use on building sites; constructed, e.g. with separable parts, to facilitate rapid assembly or dismantling, for operation at successively higher levels, for transport by road or rail (with supporting couples provided by walls or building B66C 23/20; mounted on vehicles B66C 23/36; jib constructions B66C 23/64)

Definition statement

This place covers:

Tower type cranes not fitting one of the subgroups B66C 23/28 - B66C 23/34.

See for example US 6 422 408

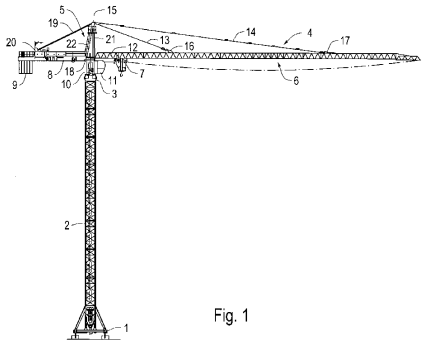

Fig. 1

B66C 23/28

constructed to operate at successively higher levels

Definition statement

This place covers:

Tower cranes where the jib does not have a fixed tower height relative to the ground and do not fit the following two subgroups.

References

Limiting references

This place does not cover:

Cranes where the tower is telescopic	B66C 23/30
Cranes which climb	B66C 23/32

B66C 23/283

{with frameworks composed of assembled elements}

Definition statement

This place covers:

Cranes which have towers which can be extended by adding an extra section to the tower.

See for example US 4 028 792

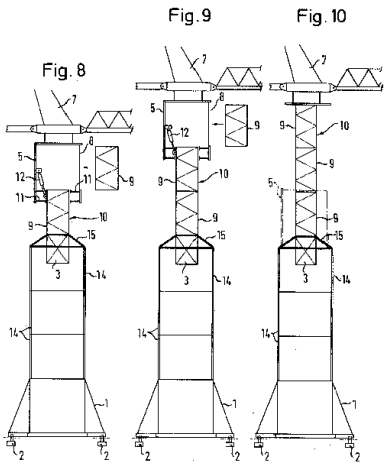

B66C 23/286

{with locking devices}

Definition statement

This place covers:

See for example US 3 499 258

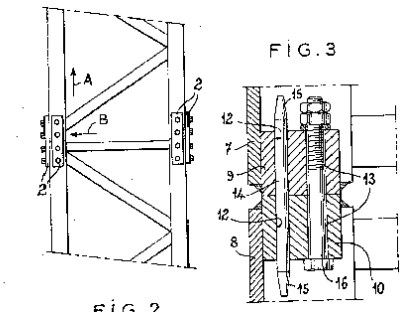

B66C 23/30

with frameworks composed of telescopic elements

Definition statement

This place covers:

Cranes which have towers which can be extended by a telescoping section of the tower.

See for example US 4 196 814

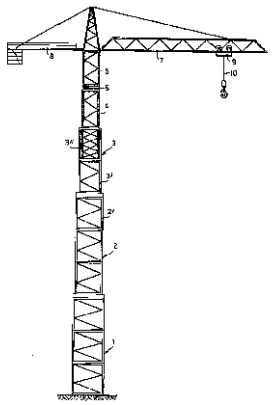

B66C 23/305

{with locking devices}

Definition statement

This place covers:

See for example US 3 361 456

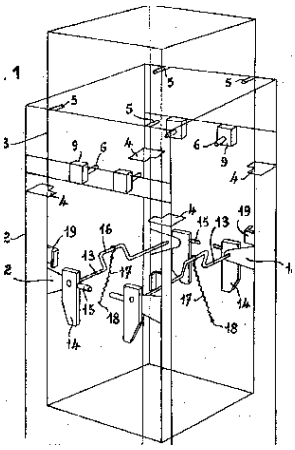

B66C 23/32

Self-hoisting cranes

Definition statement

This place covers:

Cranes which can alter the height of the jib and top of tower by climbing up other structures.

See for example US 3 485 384

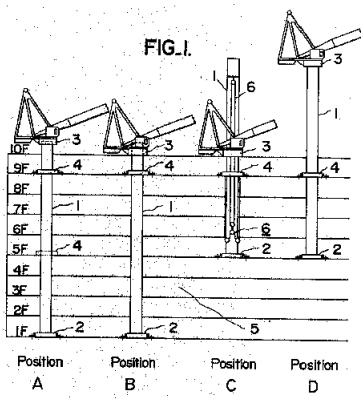

B66C 23/34

Self-erecting cranes, i.e. with hoisting gear adapted for crane erection purpose

Definition statement

This place covers:

Cranes which can assemble or erect themselves into their working configuration, not falling into one of the following four subgroups.

See for example US 3 378 147

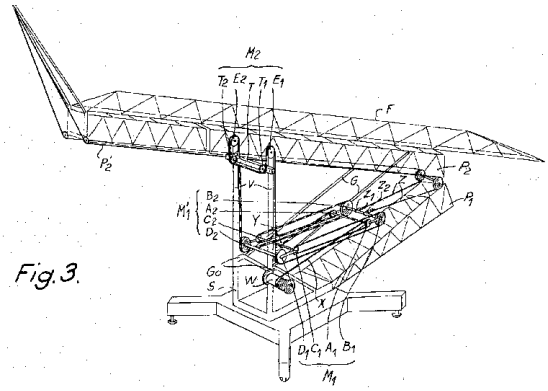

References

Limiting references

This place does not cover:

Mobile cranes with arrangements for assembling and lifting the boom from the ground.	B66C 23/82

B66C 23/342

{with telescopic elements}

Definition statement

This place covers:

Cranes which erect by extending a telescopic section.

See for example US 4 446 975

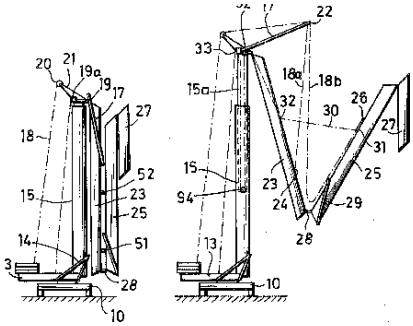

B66C 23/344

{adapted for transport purposes}

Definition statement

This place covers:

Where the arrangement relates specifically to transport of the crane, i.e. not merely to folding the tower and jib to the horizontal position.

See for example US 2004/0221673

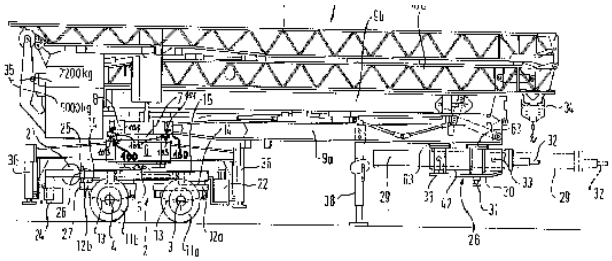

References

Limiting references

This place does not cover:

Mobile cranes dismantlable for transport	B66C 23/365

B66C 23/346

{with locking devices}

Definition statement

This place covers:

Cranes with devices for locking the elements into their operating or transport positions.

See for example US 3 856 150

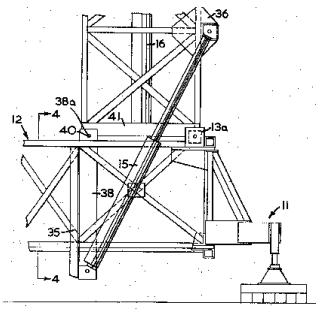

B66C 23/348

{the erection being operated by jacks}

Definition statement

This place covers:

Cranes where the erecting mechanism uses jacks instead of for example winches and cables.

See for example US 2003/0127409

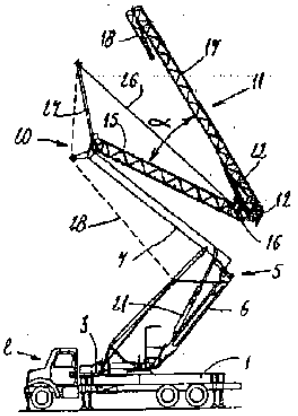

B66C 23/36

mounted on road or rail vehicles; Manually-movable jib-cranes for use in workshops; Floating cranes (with pneumatic or hydraulic motors B66C 23/54; vehicle or ship aspects B60 - B63)

Definition statement

This place covers:

Vehicle mounted cranes not fitting one of the subgroups B66C 23/38 - B66C 23/56.

B66C 23/365

{dismantable into smaller units for transport purposes}

Definition statement

This place covers:

See for example US 2007/0221600

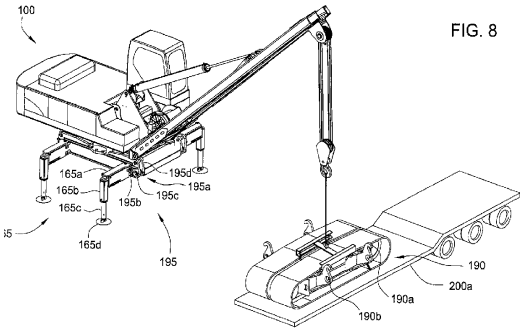

FIG. 8

References

Limiting references

This place does not cover:

Tower cranes dismantlable for transport	B66C 23/344

B66C 23/38

with separate prime movers for crane and vehicle

Definition statement

This place covers:

Mobile cranes with more than one engine, e.g. where the engine driving the crane lifting functions is not used for propelling the crane along a road.

B66C 23/40

with a single prime mover for both crane and vehicle

Definition statement

This place covers:

Where the same engine is used for driving the lifting functions and wheels or tracks.

B66C 23/42

with jibs of adjustable configuration, e.g. foldable

Definition statement

This place covers:

Mobile cranes with telescopic or extendable jibs, or jibs which change configuration during operation.

See for example US 5 704 498

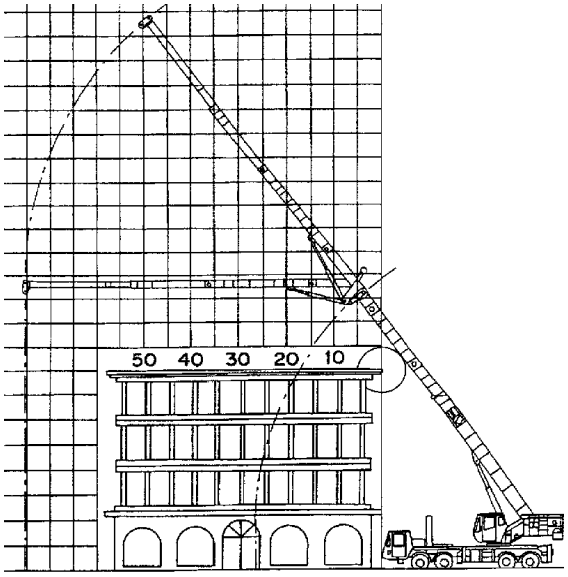

References

Limiting references

This place does not cover:

Cranes with jibs which are folded for transport using cylinders.	B66C 23/54

B66C 23/44

Jib-cranes adapted for attachment to standard vehicles, e.g. agricultural tractors

Definition statement

This place covers:

Vehicle mounted cranes, i.e. mounted on a normal vehicle rather than a mobile crane where the chassis is specially constructed for a crane.

pipe laying cranes where a boom is mounted to one side of a wheeled or tracked chassis.

See for example US 6 138 991 or US 7 600 646

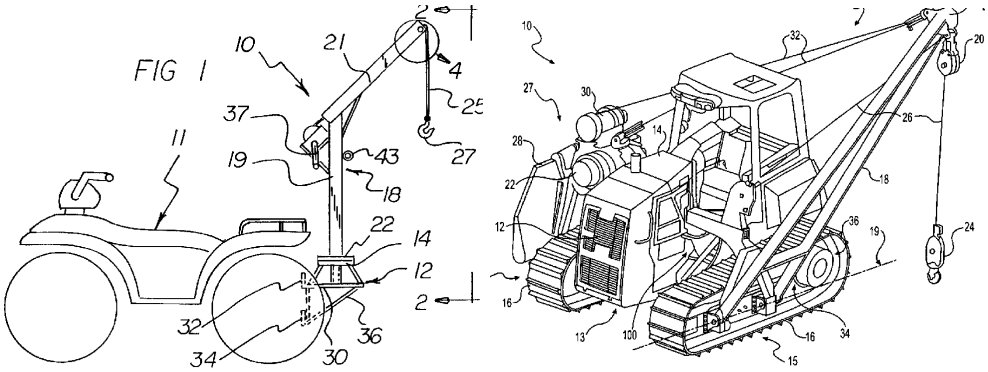

References

Limiting references

This place does not cover:

Cylinder operated jibs on trucks	B66C 23/54

B66C 23/46

Mobile jib-cranes with non-slewable jibs

References

Limiting references

This place does not cover:

Pipe laying cranes	B66C 23/44

B66C 23/48

Manually-movable jib cranes for use in workshops

Definition statement

This place covers:

Small cranes on wheels which can be moved around manually or have simple drives.

See for example US 2011/0043062

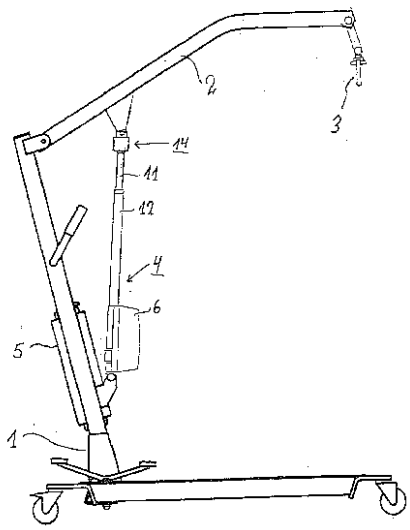

B66C 23/485

{for lifting and moving engines, e.g. car or aero engines or parts thereof}

Definition statement

This place covers:

See for example US 5 800 000

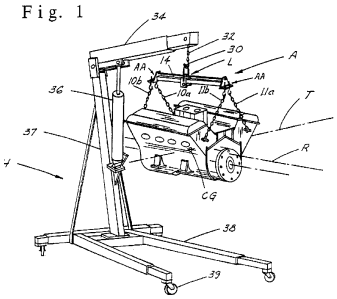

References

Limiting references

This place does not cover:

Load connecting element for lifting engines	B66C 1/107

B66C 23/50

mounted on railway vehicles, e.g. breakdown cranes

Definition statement

This place covers:

See for example US 6 691 881

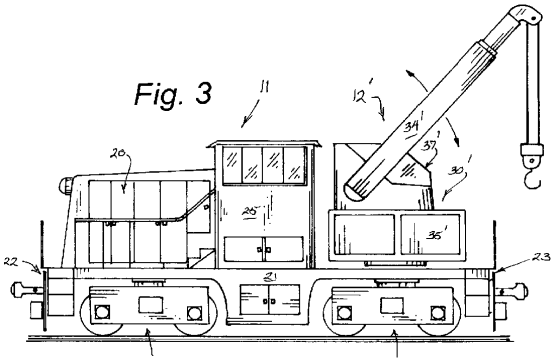

B66C 23/52

Floating cranes (floating dredgers E02F)

Definition statement

This place covers:

Cranes mounted on a ship or other floating structure.

See for example US2011/0031205

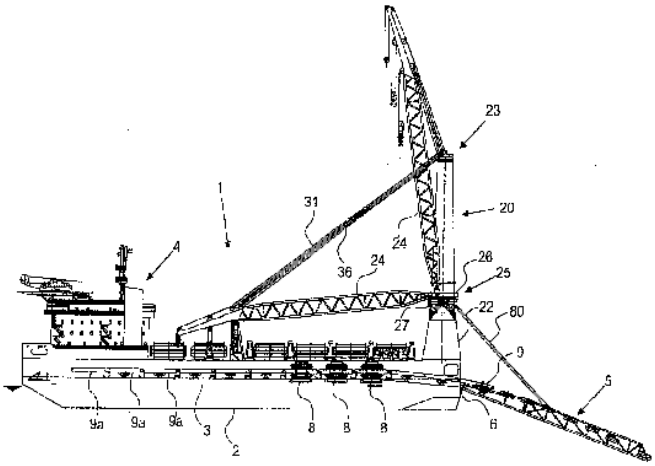

B66C 23/525

{Double slewing cranes on ships}

Definition statement

This place covers:

Cranes with double jibs.

See for example US 3 684 104

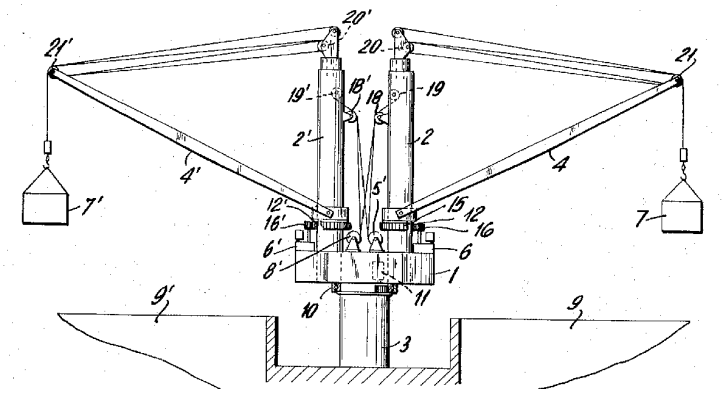

References

Limiting references

This place does not cover:

Cranes with double jibs mounted on land	B66C 23/00

B66C 23/53

including counterweight or means to compensate for list, trim, or skew of the vessel or platform (counterweights or supports for balancing lifting couples B66C 23/72; equipment to decrease unwanted vessel movements B63B 39/00)

Definition statement

This place covers:

See for example WO2011/019121

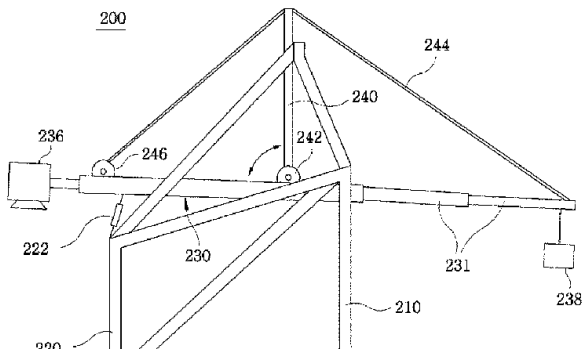

B66C 23/54

{with pneumatic or hydraulic motors, e.g. for actuating jib-cranes on tractors}

Definition statement

This place covers:

Jib cranes with hydraulic cylinders, e.g. for folding jib for transport.

See for example EP 1 707 529

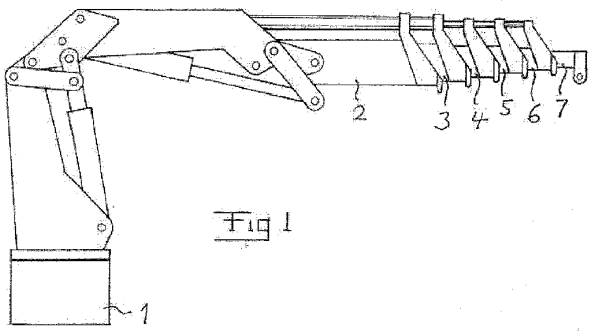

Special rules of classification

No corresponding IPC exists. Subject matter should be given an IPC classification in B66C 23/68

B66C 23/545

{with arrangements for avoiding dead centre problems during cylinder motion}

Definition statement

This place covers:

See for example EP 0 733 585

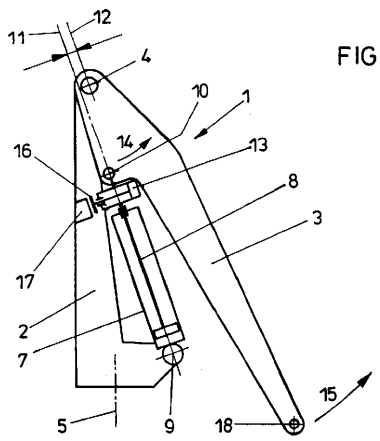

B66C 23/56

{of the reciprocating type}

Special rules of classification

This group is not used anymore.

B66C 23/58

arranged to carry out a desired sequence of operations automatically, e.g. hoisting followed by luffing and slewing

Definition statement

This place covers:

See for example US 4 091 943

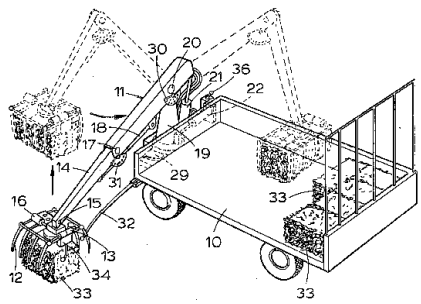

B66C 23/60

Derricks

Definition statement

This place covers:

See for example US 4 826 023

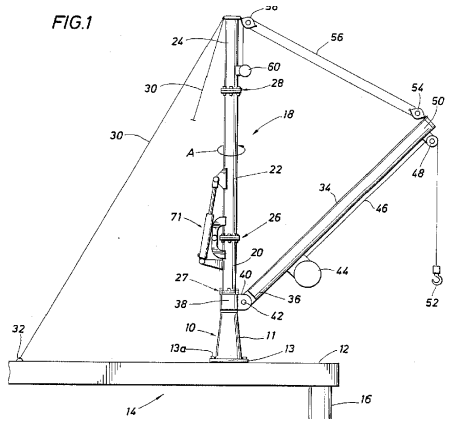

B66C 23/605

{employing ships' masts (B66C 23/525 takes precedence)}

Definition statement

This place covers:

See for example US 4 187 949

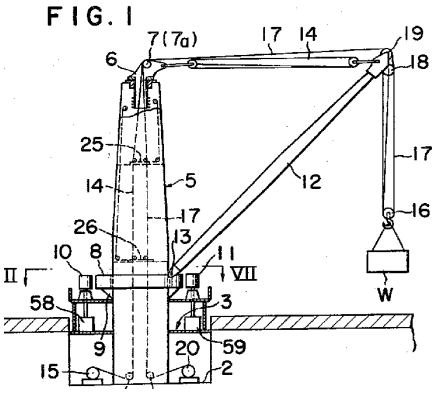

References

Limiting references

This place does not cover:

Double derricks on ships	B66C 23/525

B66C 23/64

Jibs

Definition statement

This place covers:

Construction of jibs not covered by the following subgroups, e.g. non-telescopic jibs.

See for example US 2011/0114587

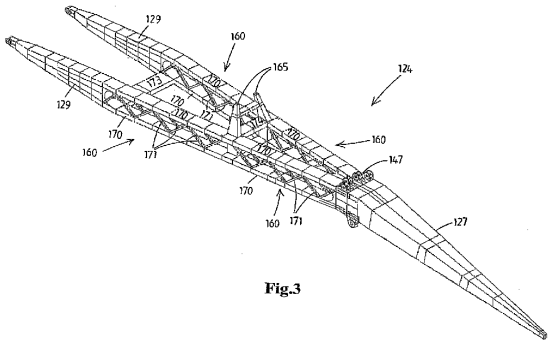

Fig.3

References

Limiting references

This place does not cover:

Telescopic jibs	B66C 23/701

B66C 23/66

Outer or upper end constructions

Definition statement

This place covers:

See for example EP 1 156 007

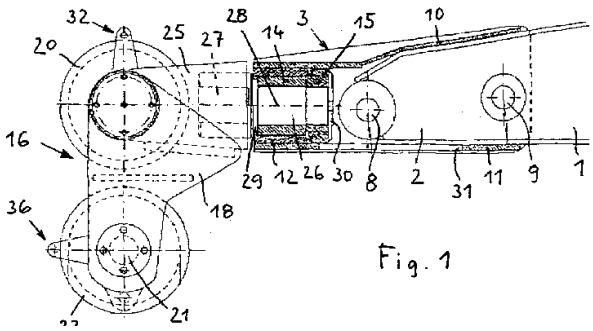

Fig. 1

References

Limiting references

This place does not cover:

Jib extensions for telescopic jibs	B66C 23/702

B66C 23/68

foldable or otherwise adjustable in configuration

Definition statement

This place covers:

See for example US 2010/0294738

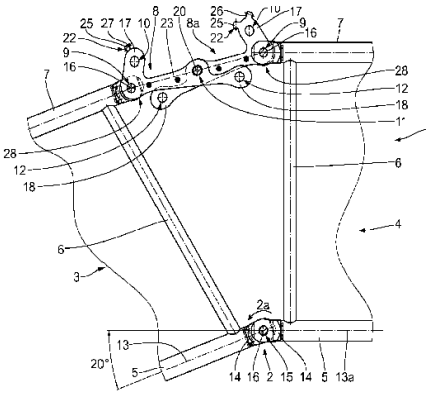

References

Limiting references

This place does not cover:

Folding jibs using cylinders	B66C 23/54
Extendable jibs	B66C 23/70
Telescopic jibs	B66C 23/701

B66C 23/70

constructed of sections adapted to be assembled to form jibs or various lengths

Definition statement

This place covers:

See for example US 2004/0238471

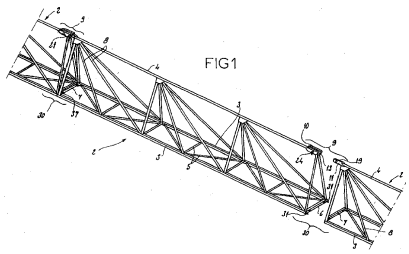

References

Limiting references

This place does not cover:

Telescopic jibs	B66C 23/701

B66C 23/701

{telescopic}

Definition statement

This place covers:

Telescopic sections.

See for example EP 1 302 435

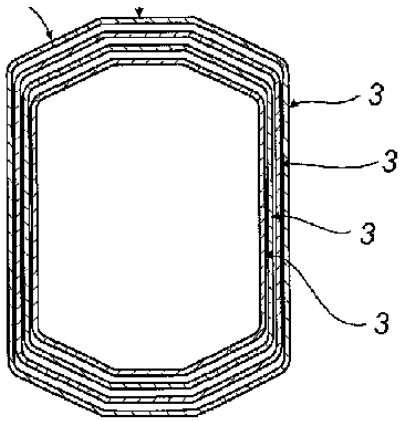

Telescoping actuator arrangements with a combination of actuators, e.g. by both cables and cylinders.

See for example US3721054

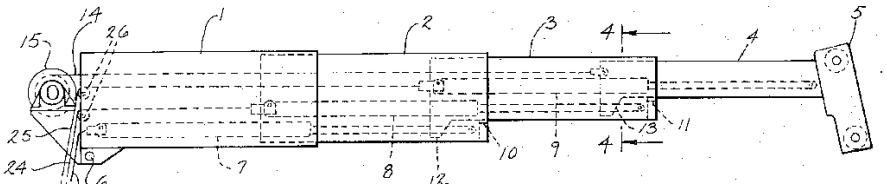

B66C 23/702

{with a jib extension boom}

Definition statement

This place covers:

See for example US 2005/0098524

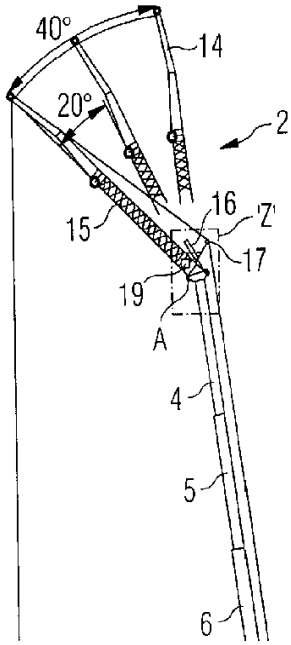

B66C 23/703

{telescoped by flexible elements, e.g. cables, chains or bands}

Definition statement

This place covers:

See for example US 3 638 806

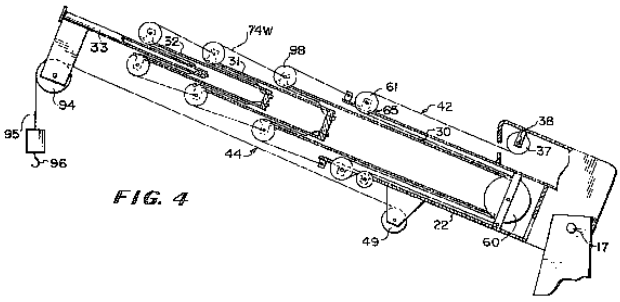

FIG. 4

References

Limiting references

This place does not cover:

Telescoping arrangements using both cables and cylinders	B66C 23/701

B66C 23/705

{telescoped by hydraulic jacks}

Definition statement

This place covers:

See for example US 5 678 708

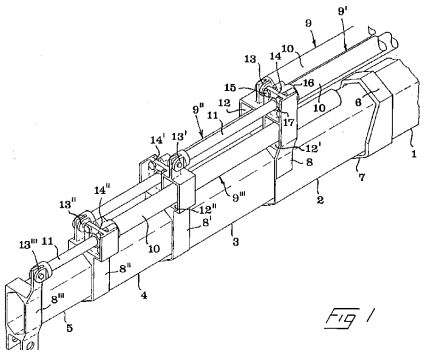

FIG 1

References

Limiting references

This place does not cover:

Telescoping arrangements using both cables and cylinders	B66C 23/701

B66C 23/706

{telescoped by other means}

Definition statement

This place covers:

See for example US 4 298 128

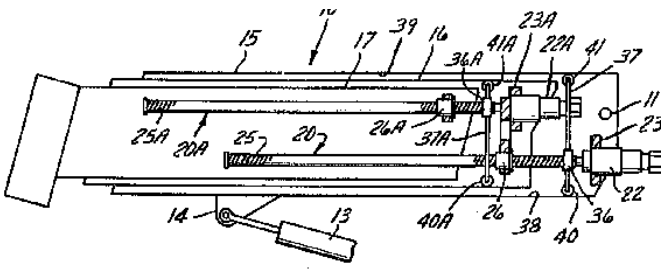

FIG. 1

B66C 23/707

{guiding devices for telescopic jibs}

Definition statement

This place covers:

Bearings between telescopic sections.

See for example US 6 499 612

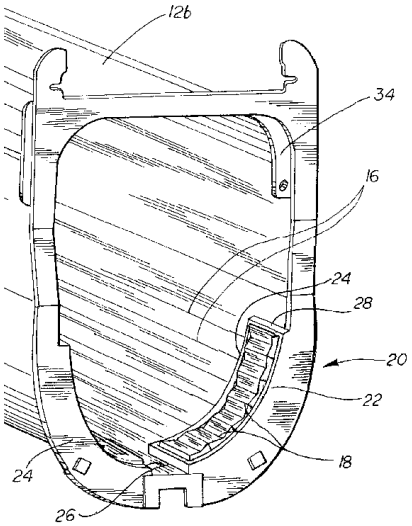

B66C 23/708

{locking devices for telescopic jibs}

Definition statement

This place covers:

Arrangements to lock the telescopic sections in a particular position.

See for example US 6 216 895

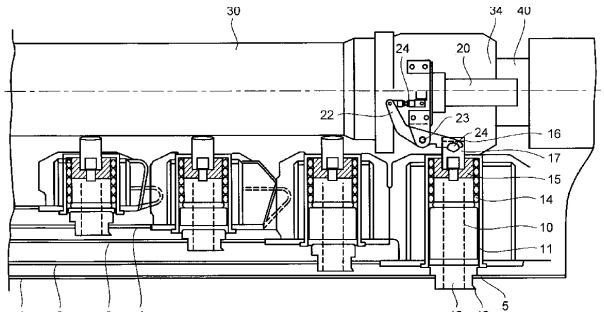

B66C 23/72

Counterweights or supports for balancing lifting couples

Definition statement

This place covers:

Counterweights associated with jib.

See for example US 6 494 330

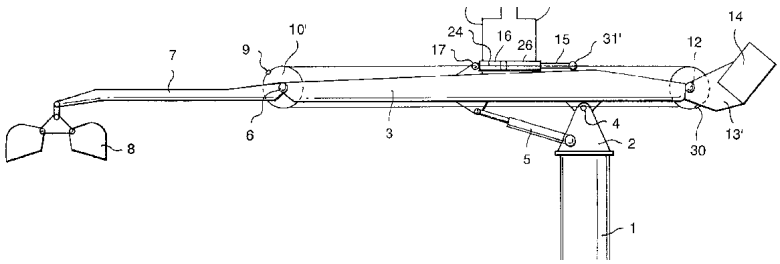

References

Limiting references

This place does not cover:

Counterweights separate from jib	B66C 23/74

Informative references

Attention is drawn to the following places, which may be of interest for search:

Counterweights for excavators	E02F 9/18

B66C 23/74

separate from jib

Definition statement

This place covers:

Static counterweights not associated with jib.

See for example US 2006/0043042

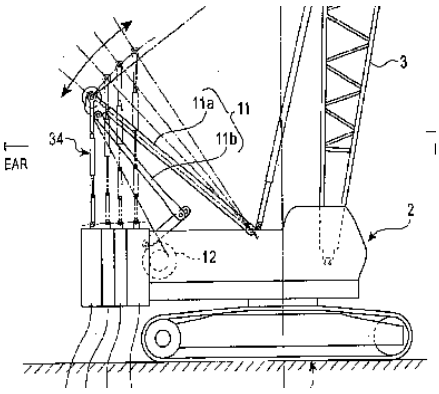

References

Limiting references

This place does not cover:

Movable counterweights not associated with jib	B66C 23/76

B66C 23/76

and movable to take account of variations of load or of variations of length of jib

Definition statement

This place covers:

Movable counterweights not associated with jib.

See for example US 6 568 547

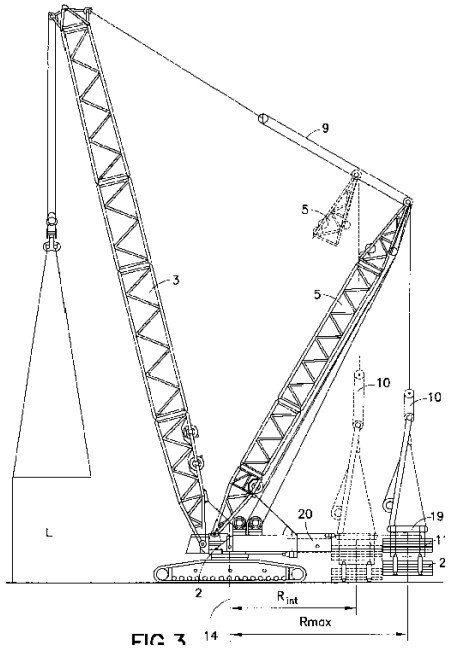

FIG. 3

B66C 23/78

Supports, e.g. outriggers, for mobile cranes

Definition statement

This place covers:

See for example US 2010/0102018

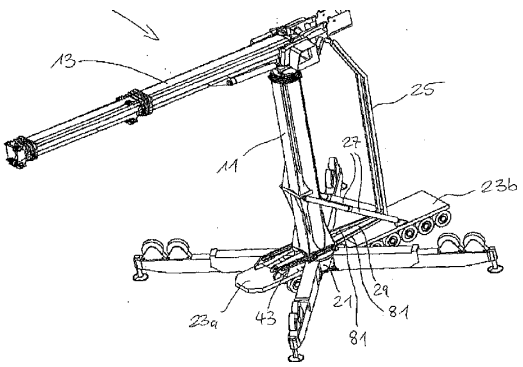

References

Limiting references

This place does not cover:

Hydraulic outriggers	B66C 23/80

Informative references

Attention is drawn to the following places, which may be of interest for search:

Outriggers for excavators	E02F 9/08

B66C 23/80

hydraulically actuated

Definition statement

This place covers:

See for example US 2004/0197181

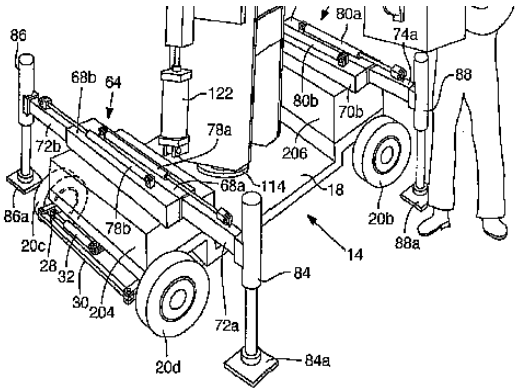

B66C 23/82

Luffing gear

Definition statement

This place covers:

Devices for luffing the jib, including for erection purposes.

See for example US 2005/0098522

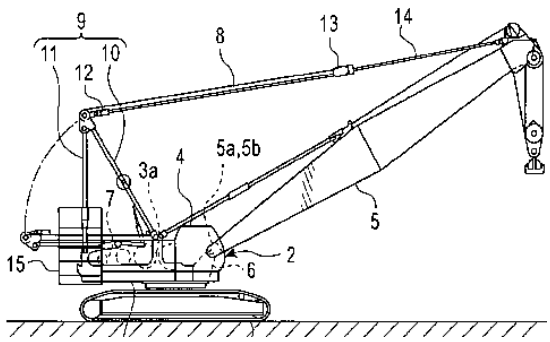

References

Limiting references

This place does not cover:

Self erecting cranes, e.g. tower cranes	B66C 23/34

B66C 23/821

{Bracing equipment for booms (Abspannstütze)}

Definition statement

This place covers:

Bracing equipment to support bending load on the jib or boom, not covered by one of the following subgroups.

B66C 23/823

{Bracing equipment acting in vertical direction}

Definition statement

This place covers:

See for example EP 1 213 254

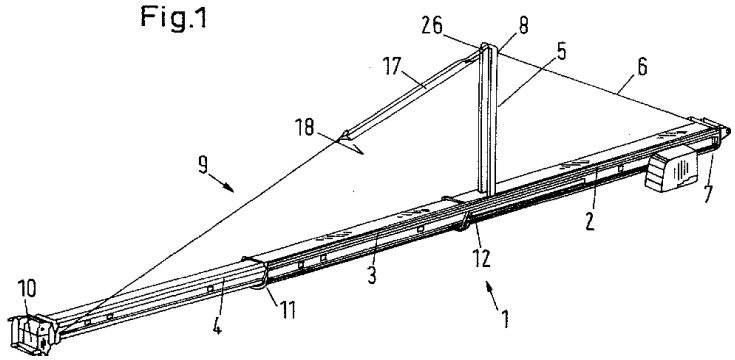

B66C 23/825

{Bracing equipment acting in horizontal direction}

Definition statement

This place covers:

See for example EP 2 271 576

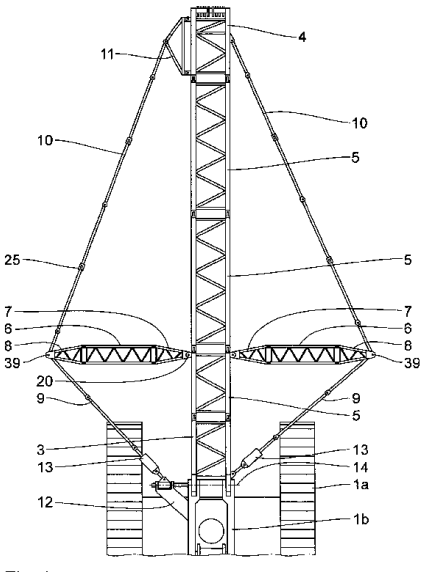

B66C 23/826

{Bracing equipment acting at an inclined angle to vertical and horizontal directions}

Definition statement

This place covers:

See for example US 2004/0129663

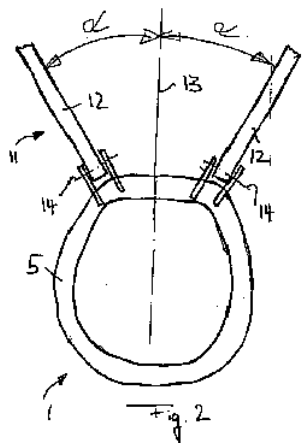

B66C 23/828

{where the angle is adjustable}

Definition statement

This place covers:

See for example US 2002/0070187

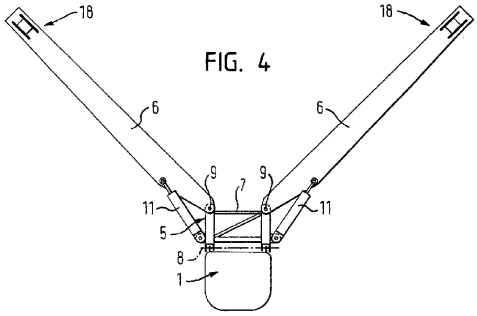

B66C 23/84

Slewing gear (anti-friction bearings F16C)

Definition statement

This place covers:

Devices for slewing the upper works or boom of a crane.

See for example US2009/0074552

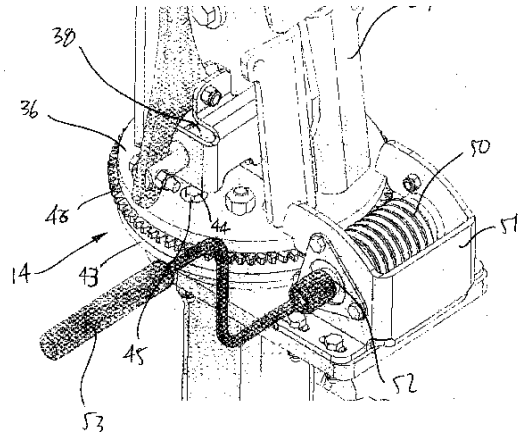

References

Limiting references

This place does not cover:

Hydraulic slewing devices	B66C 23/86

B66C 23/86

hydraulically actuated

Definition statement

This place covers:

Devices for slewing the upper works or boom of a crane using hydraulic motors or cylinders.

See for example US 7 677 861

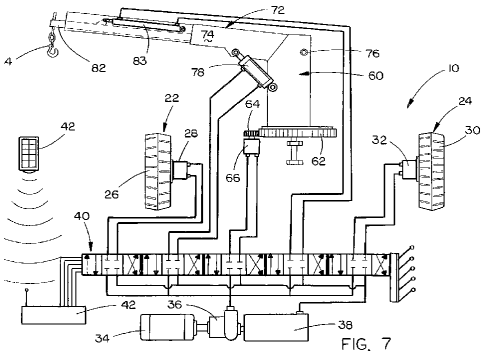

FIG. 7

B66C 23/88

Safety gear (for cranes in general B66C 15/00; for rope, cable, or chain winding mechanisms B66D 1/54)

Definition statement

This place covers:

Safety gear for boom cranes not covered by one of the subgroups B66C 23/90 - B66C 23/94.

References

Limiting references

This place does not cover:

General crane safety devices	B66C 15/00

B66C 23/90

Devices for indicating or limiting lifting moment

Definition statement

This place covers:

Non-electrical safety devices.

B66C 23/905

{electrical}

Definition statement

This place covers:

Electrical safety devices.

B66C 23/92

Snubbers or dashpots for preventing backwards swinging of jibs, e.g. in the event of cable or tackle breakage

Definition statement

This place covers:

See for example US 2 840 244

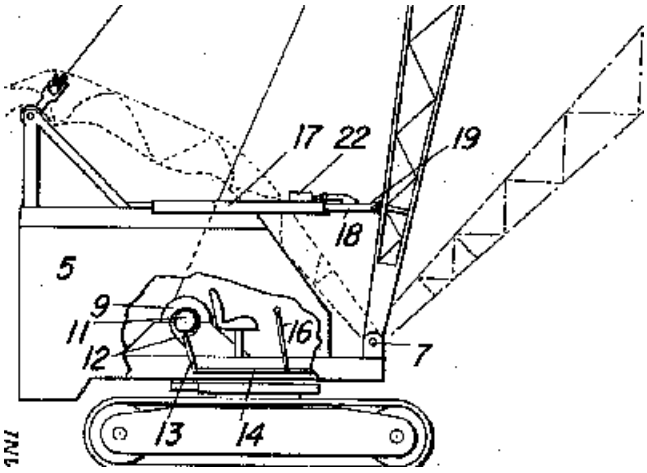

B66C 23/94

for limiting slewing movements

Definition statement

This place covers:
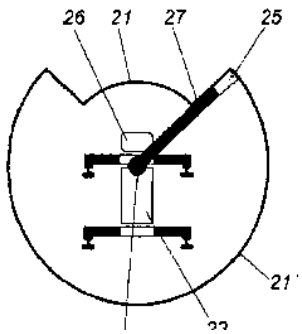
See for example US 2007/0144995