B30B

PRESSES IN GENERAL (producing ultra-high pressure or ultra-high pressure and high temperature to effect modifications of a substance, e.g. for making artificial diamonds B01J 3/00){(compressing means for refuse receptacles B65F 1/1405)}

Definition statement

This place covers:

Presses in general and also those presses, for particular purposes, which are not provided for elsewhere.

Relationships with other classification places

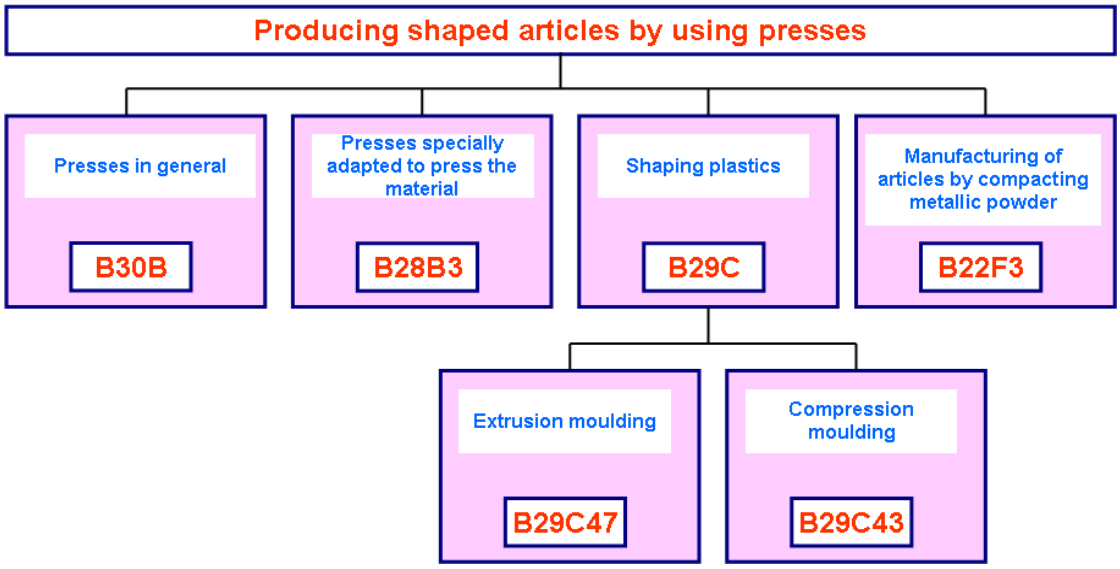

The preceding image includes references to B22F 3/00, B28B 3/00, B29C, B29C 43/00, and **B28C47/00**.

B30B 1/00

Presses, using a press ram, characterised by the features of the drive therefor, pressure being transmitted directly, or through simple thrust or tension members only, to the press ram or platen

Definition statement

This place covers:

Presses using a press ram characterised by the features of the drive therefor in general and also those presses using a press ram characterised by the features of the drive therefor, for particular purposes, which are not provided for elsewhere. The driving system is decomposed, if necessary, in simple fluid actuation units (e.g. a cylinder/piston) and simple mechanical force multipliers (e.g. a lever, a toggle, a screw/nut system).

References

Informative references

Attention is drawn to the following places, which may be of interest for search:

Shaping by press-cutting; Perforating - Drive of the tools	B21D 28/002
Hammers; Forging machines with hammers or die jaws acting by impact; Drives for hammers	B21J 7/20
Forging presses; Drives for forging presses	B21J 9/10
Shearing machines or shearing devices cutting by blades which move parallel to themselves characterised by drives or gearings therefor	B23D 15/12
Arrangements for operating and controlling machines or devices for cutting, cutting-out, stamping-out, punching, perforating, or severing by means other than cutting - Means for actuating the cutting member to effect the cut	B26D 5/08

Special rules of classification

Rule 1

Plural driving units of the same kind applying force in parallel to the ram or platen are classified together with the single driving unit per se. Exceptions to rule 1 are clearly indicated.

Rule 2

Plural driving units applying force in series to the ram or platen are classified according to the driving unit in direct contact or in contact through simple thrust or tension members only, to the press ram or platen. Exceptions to rule 2 are clearly indicated.

B30B 1/001

{by explosive charges}

Definition statement

This place covers:

Presses for which the fluid pressure is generated by explosive charges in a cylinder/piston unit or in a chamber. Illustrative example of subject matter classified in this group:

DE-A-2122605

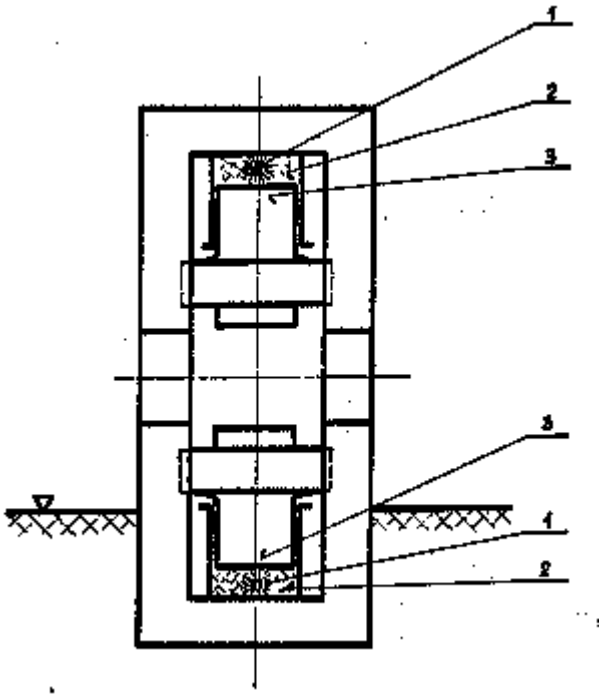

References

Informative references

Attention is drawn to the following places, which may be of interest for search:

Shaping without cutting otherwise than using rigid devices or tools or yieldable or resilient pads by applying fluid pressure by shock waves generated by explosives	B21D 26/08
Shearing machines or shearing devices cutting by blades which move parallel to themselves characterised by drives or gearings therefor actuated by fluid or gas pressure - actuated by explosion	B23D 15/145
Explosive welding	B23K 20/08
Gearing	F16H

B30B 1/002

{by internal combustion mechanism}

Definition statement

This place covers:

Presses for which the fluid pressure is generated by internal combustion mechanism in a cylinder/ piston unit. Illustrative example of subject matter classified in this group:

FR-A-2046587

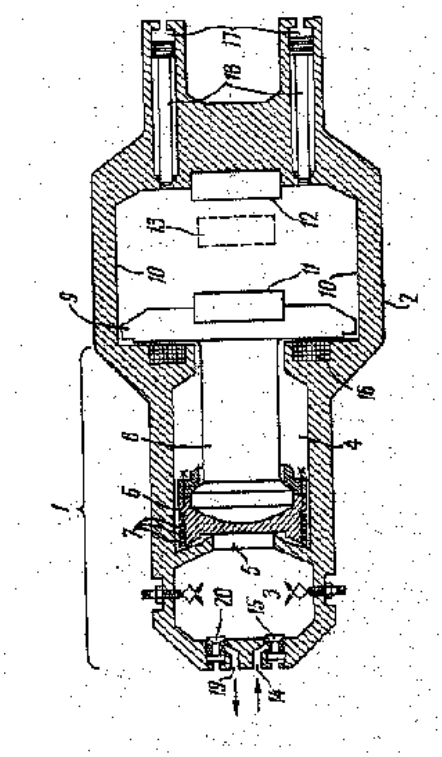

References

Informative references

Attention is drawn to the following places, which may be of interest for search:

Drives for hammers operated by internal combustion	B21J 7/26

B30B 1/003

{by an elastic bag or diaphragm expanded by fluid pressure}

Definition statement

This place covers:

Presses for which the fluid is injected in a bag or in a chamber presenting a diaphragm. Illustrative example of subject matter classified in this group:

WO-A-9114569

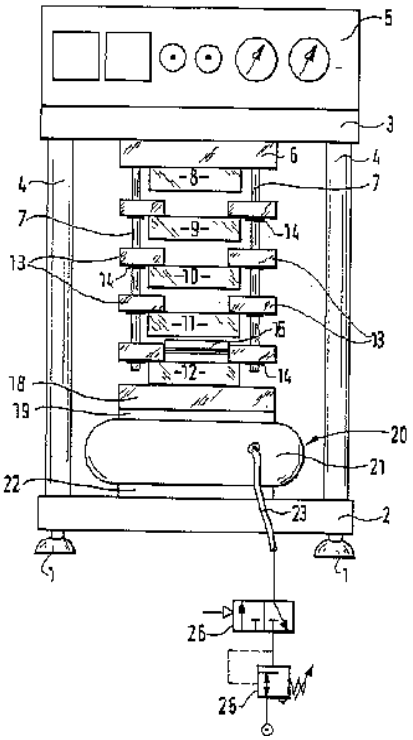

B30B 1/005

{by thermal expansion or evaporation}

Definition statement

This place covers:

Illustrative example of subject matter classified in this group:

US-A-4260582

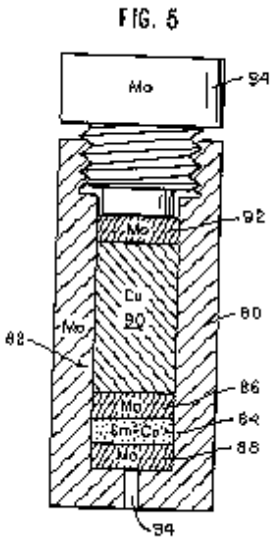

B30B 1/006

{by a scissor or lazy-tongs mechanism}

Definition statement

This place covers:

Presses for which one part of the scissor or lazy-tongs mechanism is in direct contact or in contact through simple thrust or tension members only, to the press ram or platen. Illustrative example of subject matter classified in this group:

DE-A-4013107

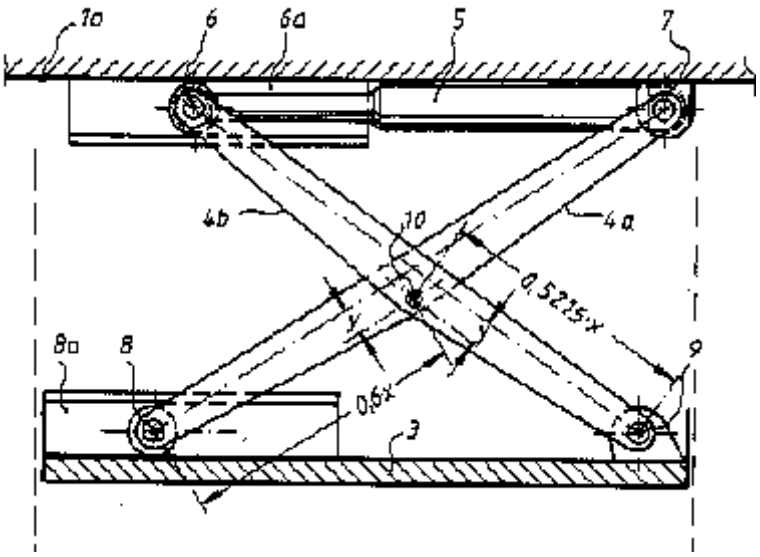

B30B 1/007

{using a fluid connection between the drive means and the press ram}

Definition statement

This place covers:

Presses for which the driving unit is classified per se. Illustrative example of subject matter classified in this group:

US-A-6539853

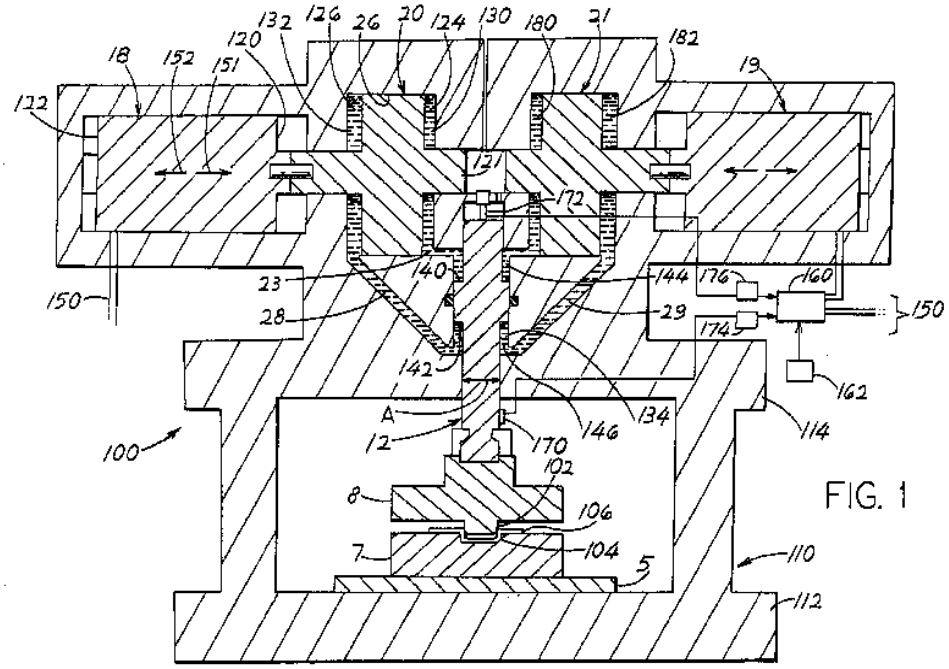

B30B 1/008

{by a rod swinging between a fixed plane and the ram}

Definition statement

This place covers:

Presses for which one end of the rod follows a path on a fixed plane and the other end of the rod is in direct contact or in contact through simple thrust or tension members only, to the press ram or platen. Illustrative example of subject matter classified in this group:

GB-A-1489575

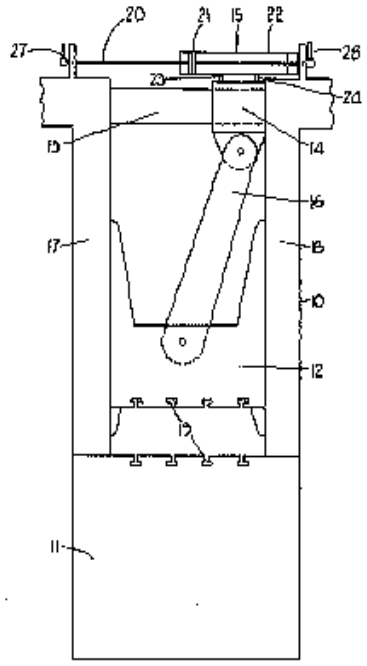

FIG. 1.

B30B 1/02

by lever mechanism (by toggle mechanism B30B 1/10)

Definition statement

This place covers:

Presses for which one part of the lever is in direct contact or in contact through simple thrust or tension members only, to the press ram or platen.

Illustrative example of subject matter classified in this group:

WO-A-9015268

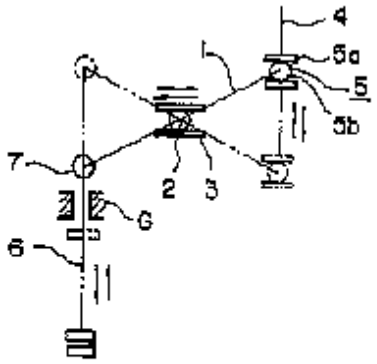

F I G. 3

References

Informative references

Attention is drawn to the following places, which may be of interest for search:

Gearings comprising primarily only links or levers, with or without slides	F16H 21/00

B30B 1/04

operated by hand or foot

Definition statement

This place covers:

Presses for which another part of the lever is in direct or indirect contact with the hand or the foot of an operator applying a force. Illustrative example of subject matter classified in this group:

US-A-5329846

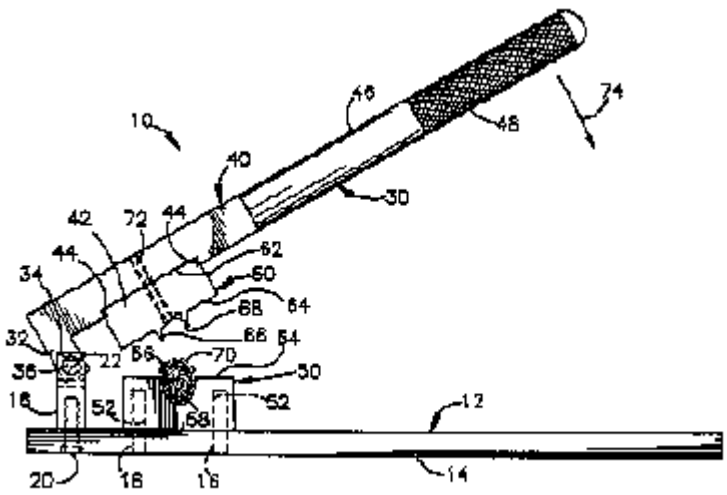

Fig.1

B30B 1/06

operated by cams, eccentrics, or cranks

Definition statement

This place covers:

Presses for which another part of the lever is in direct or indirect contact with a cam, eccentric, or crank unit applying a force. Illustrative example of subject matter classified in this group:

DE-A-10241107

FIG. 1

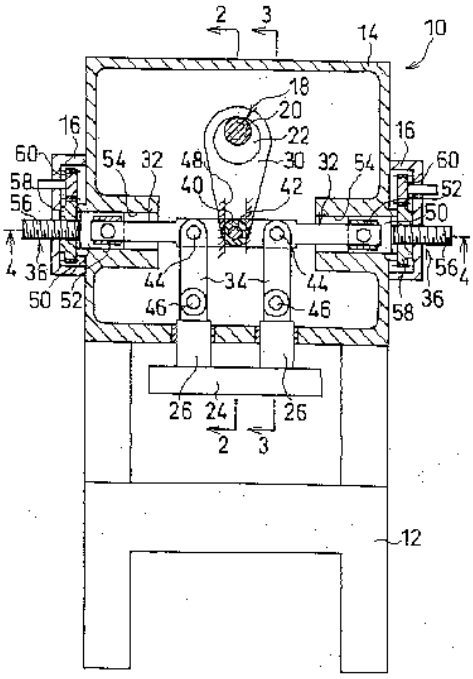

B30B 1/08

operated by fluid-pressure means

Definition statement

This place covers:

Presses for which another part of the lever is in direct or indirect contact with a fluid-pressure unit applying a force. Illustrative example of subject matter classified in this group:

US-A-4329865

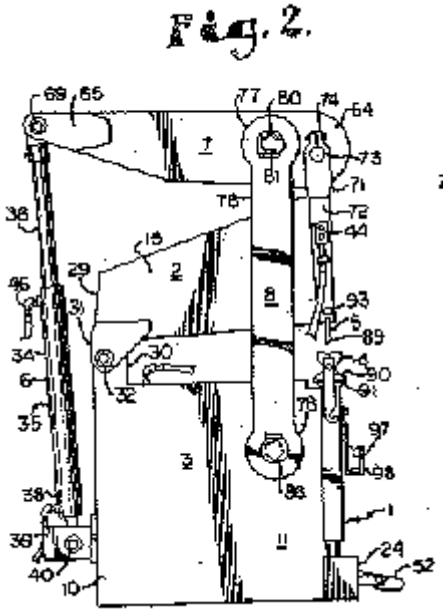

B30B 1/10

by toggle mechanism

Definition statement

This place covers:

Presses for which one part of the toggle is in direct contact or in contact through simple thrust or tension members only, to the press ram or platen. The driving force is applied transversally to the line that can be drawn between the two ends of the two bars system constituting the toggle. Illustrative example of subject matter classified in this group:

US-A-4302412

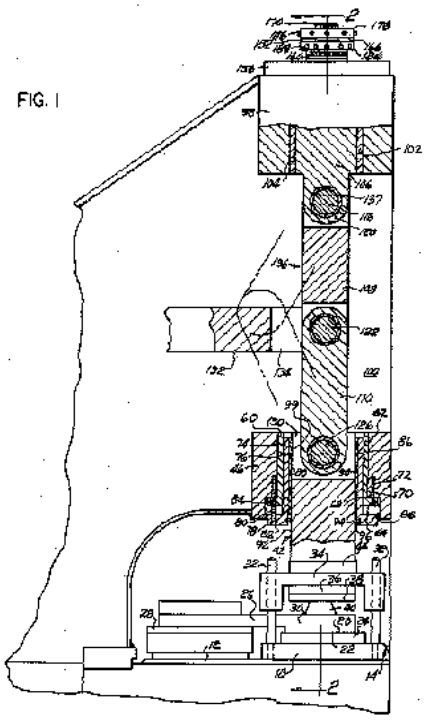

References

Informative references

Attention is drawn to the following places, which may be of interest for search:

Arrangements for operating and controlling machines or devices for cutting, cutting-out, stampin g-out, punching, perforating, or severing by means other than cutting. Means for actuating the cutting member to effect the cut Toggle-link means	B26D 5/18

B30B 1/103

{operated by screw means}

Definition statement

This place covers:

Presses for which another part of the toggle is in direct or indirect contact with a screw/nut unit applying a force. Illustrative example of subject matter classified in this group:

US-A-5184548

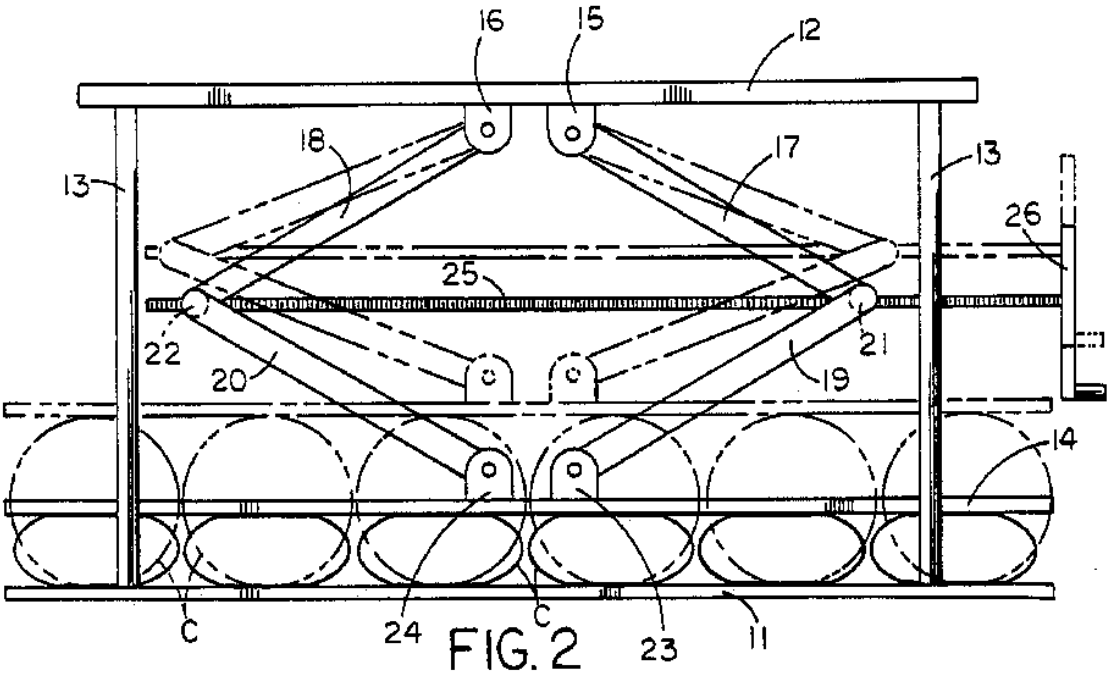

FIG. 2

B30B 1/106

{operated by another toggle mechanism}

Definition statement

This place covers:

Presses for which another part of the toggle is in direct or indirect contact with another toggle unit applying a force. The driving unit of the second toggle is classified, if necessary, per se in the groups B30B 1/103, B30B 1/106 or B30B 1/12 - B30B 1/18. Illustrative example of subject matter classified in this group:

US-A-4448119

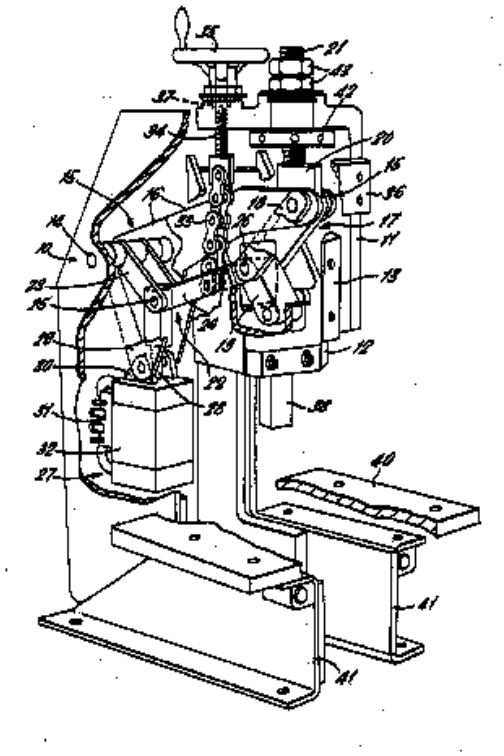

B30B 1/12

operated by hand or foot

Definition statement

This place covers:

Presses for which another part of the toggle is in direct or indirect contact with the hand or the foot of an operator applying a force. Illustrative example of subject matter classified in this group:

US-A-4068576

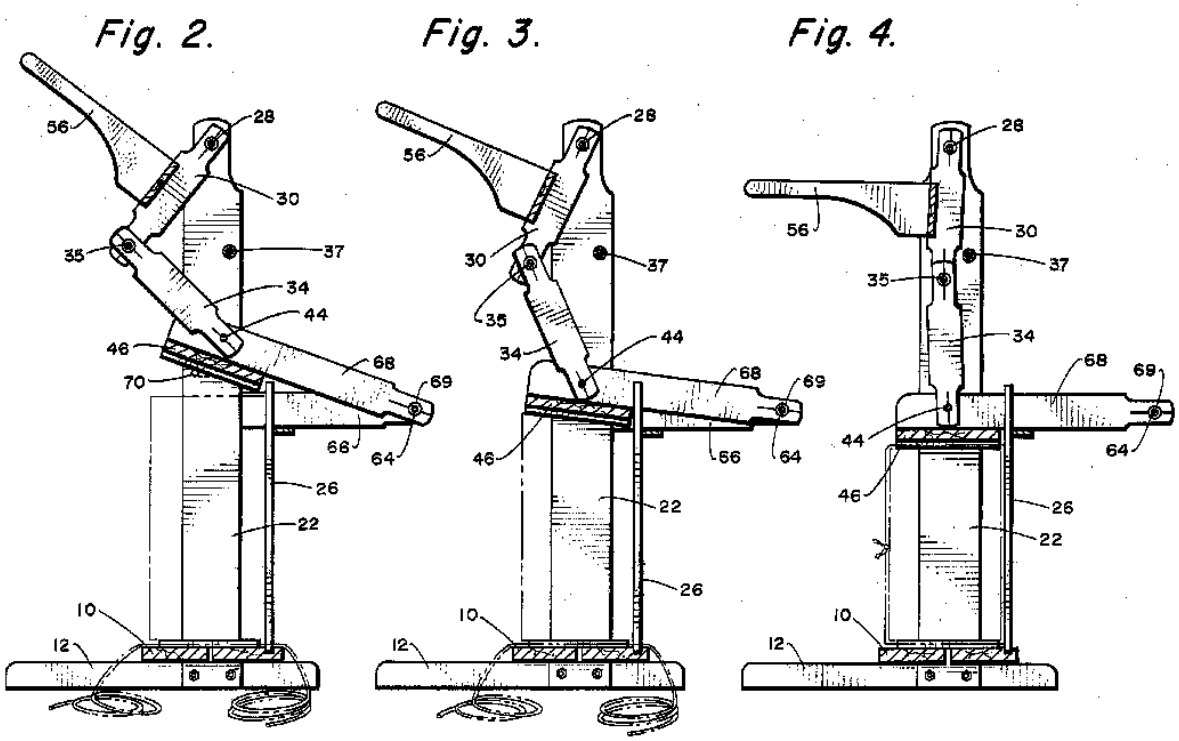

B30B 1/14

operated by cams, eccentrics, or cranks

Definition statement

This place covers:

Presses for which another part of the toggle is in direct or indirect contact with a cam, eccentric, or crank unit applying a force. Illustrative example of subject matter classified in this group:

US-A-4485708

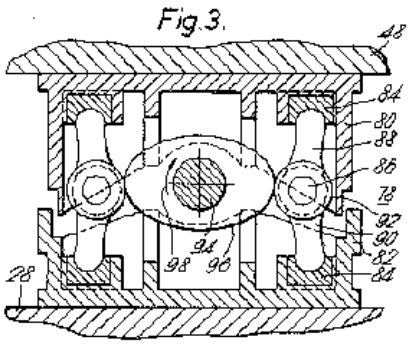

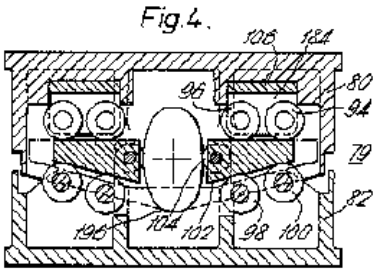

B30B 1/16

operated by fluid-pressure means

Definition statement

This place covers:

Presses for which another part of the toggle is in direct or indirect contact with a fluid-pressure unit applying a force. Illustrative example of subject matter classified in this group:

EP-A-537646

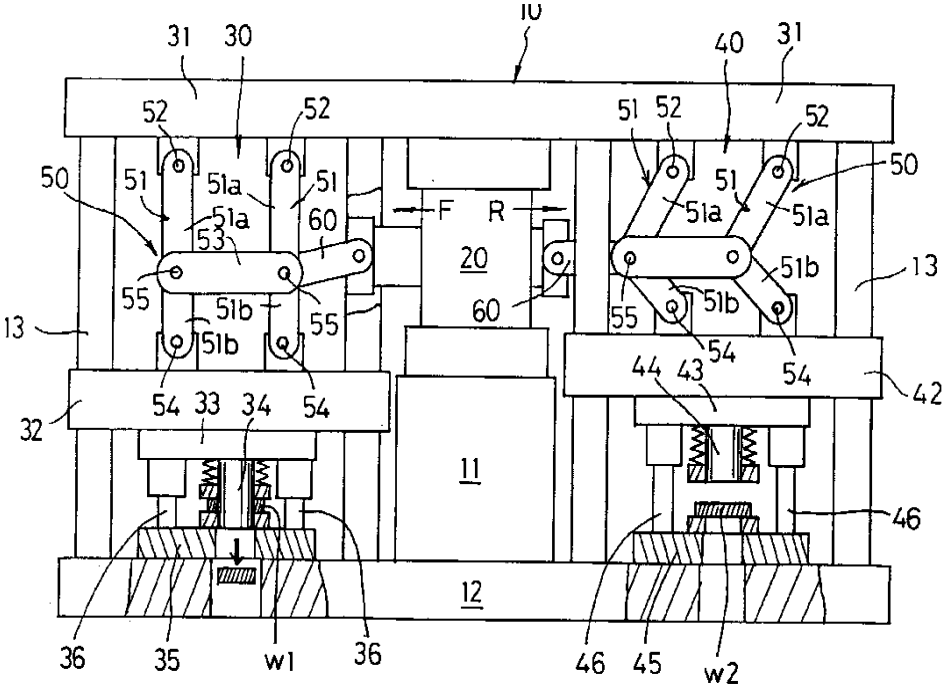

Fig. 1

B30B 1/18

by screw means {(B30B 9/3064 takes precedence)}

Definition statement

This place covers:

Presses for which one part of the screw/nut unit is in direct contact or in contact through simple thrust or tension members only, to the press ram or platen. Illustrative example of subject matter classified in this group:

WO-A-2009073240

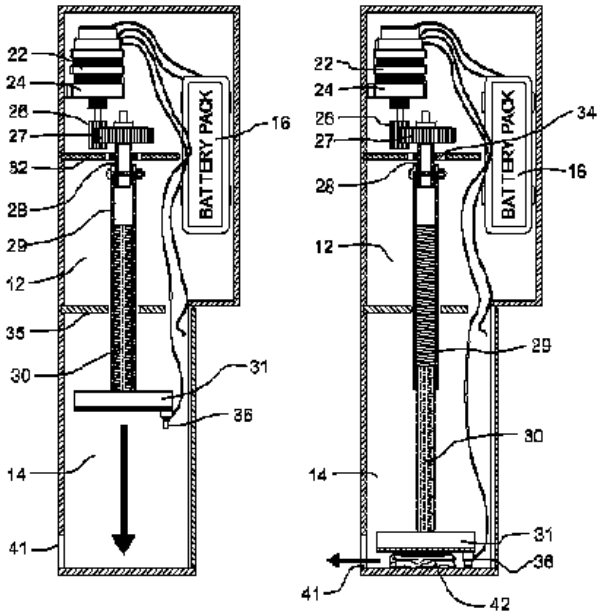

Fig. 2A Fig. 2B

References

Informative references

Attention is drawn to the following places, which may be of interest for search:

Gearings comprising primarily only cams, cam-followers and screw-and-nut mechanisms	F16H 25/00

B30B 1/181

{the screw being directly driven by an electric motor}

Definition statement

This place covers:

Presses for which the rotor part of the electric motor is fixed directly to a part of the screw/nut unit. Illustrative example of subject matter classified in this group:

US-A-3626222

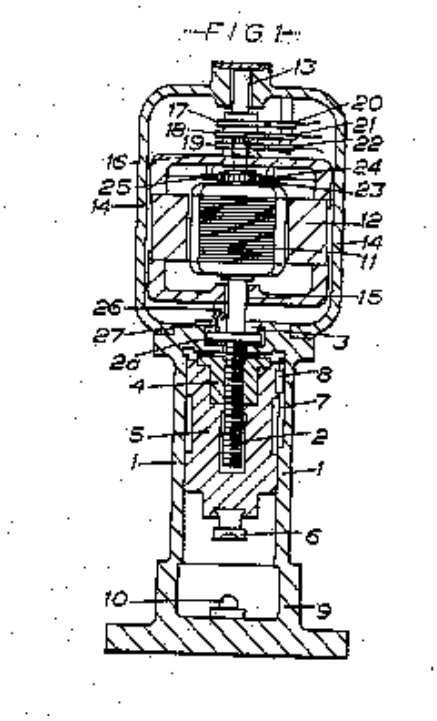

B30B 1/183

{Braking mechanisms for the return movement of the press ram}

Definition statement

This place covers:

Illustrative example of subject matter classified in this group:

US-A-3886859

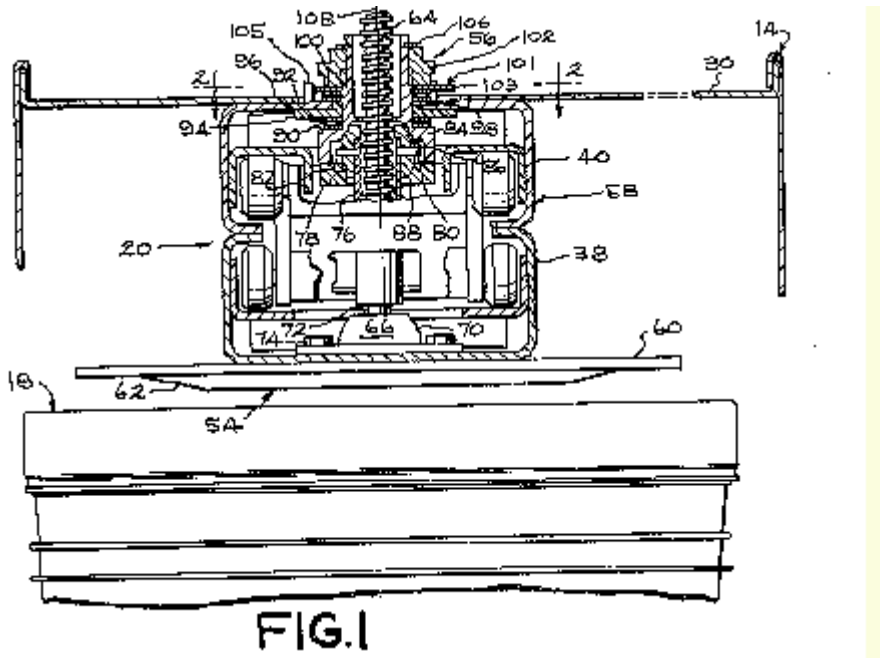

B30B 1/185

{driven through friction roller means}

Definition statement

This place covers:

Illustrative example of subject matter classified in this group:

DE-A-2915540

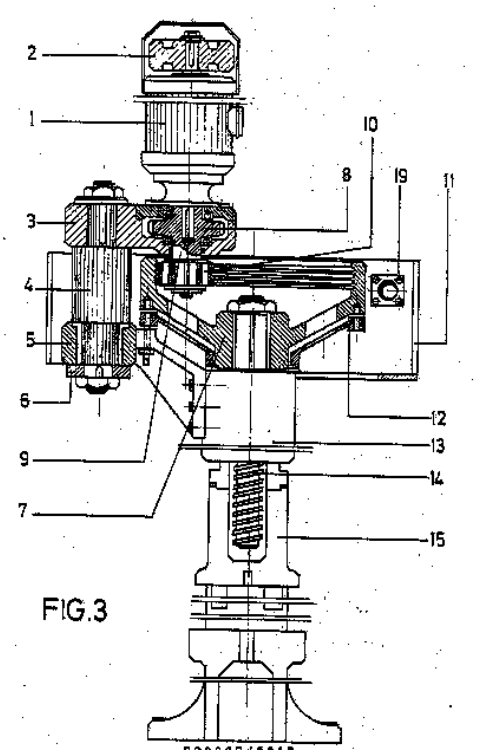

B30B 1/186

{Control arrangements}

Definition statement

This place covers:

Illustrative example of subject matter classified in this group:

US-A-2008201011

Fig. 1

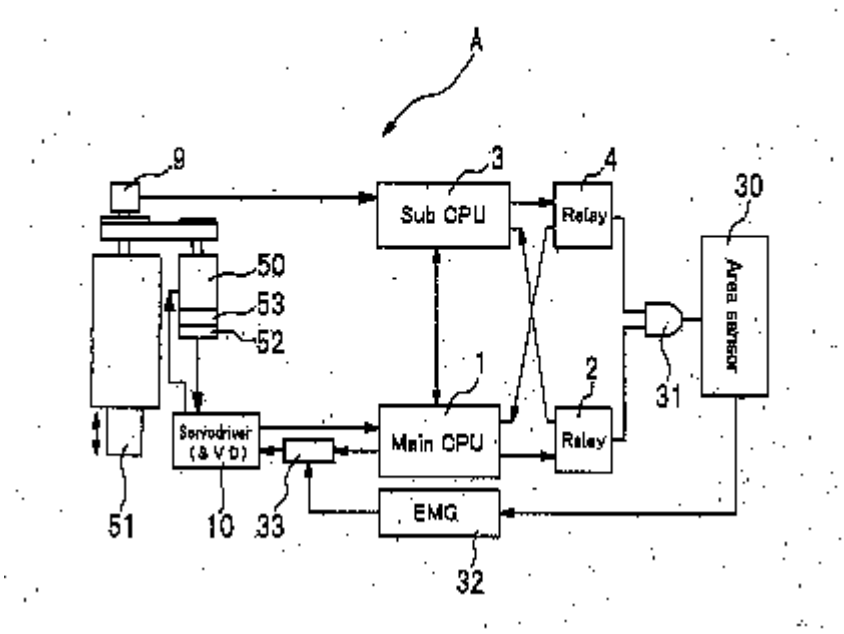

B30B 1/188

{driven by a continuously rotatable flywheel with a coupling arranged between the flywheel and the screw}

Definition statement

This place covers:

Illustrative example of subject matter classified in this group:

US-A-4627266

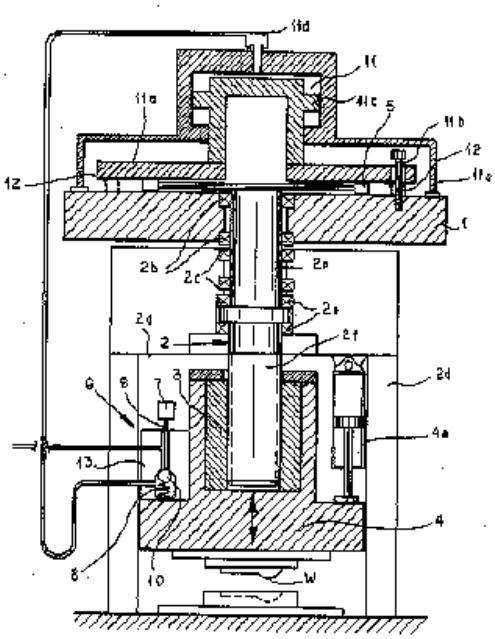

FIG.1

B30B 1/20

driven by hand

Definition statement

This place covers:

Presses for which another part of the screw/nut unit is in direct or indirect contact with the hand or the foot of an operator applying a force. Illustrative example of subject matter classified in this group:

US-A-1782076

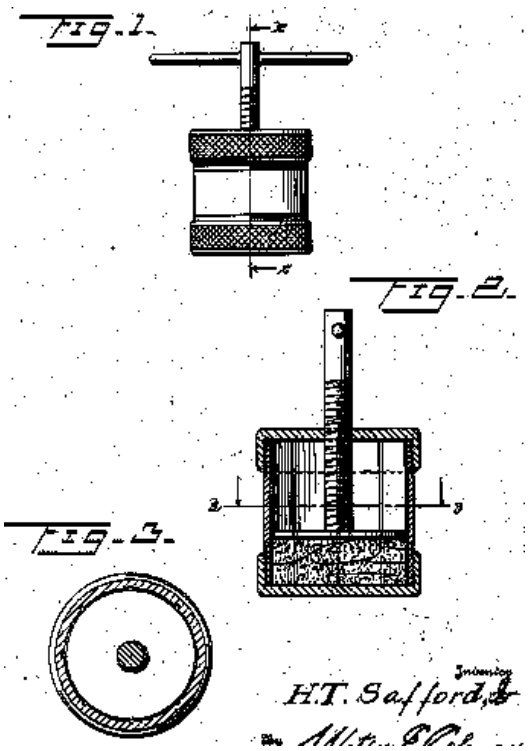

B30B 1/22

driven through friction disc means

Definition statement

This place covers:

Illustrative example of subject matter classified in this group:

US-A-4062284

FIG. 1

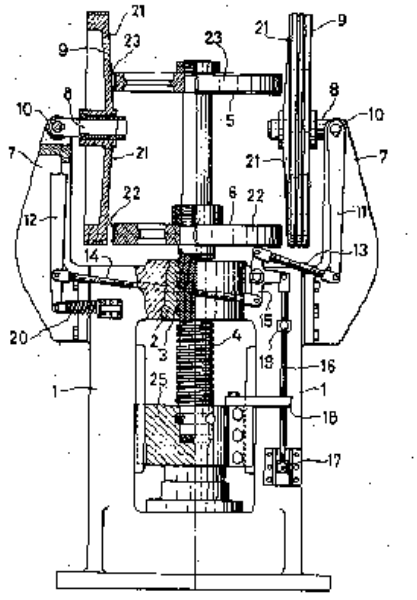

B30B 1/23

operated by fluid-pressure means

Definition statement

This place covers:

Presses for which another part of the screw/nut unit is in direct or indirect contact with a fluid-pressure unit applying a force. Illustrative example of subject matter classified in this group:

DE-A-2842552

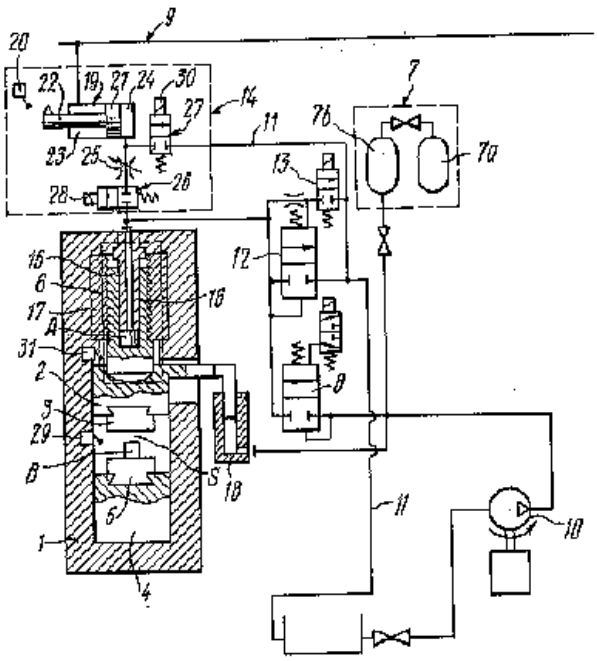

B30B 1/24

by rack-and-pinion means {(B30B 9/3067 takes precedence)}

Definition statement

This place covers:

Presses for which one part of the rack-and-pinion unit is in direct contact or in contact through simple thrust or tension members only, to the press ram or platen. Illustrative example of subject matter classified in this group:

EP-A-416260

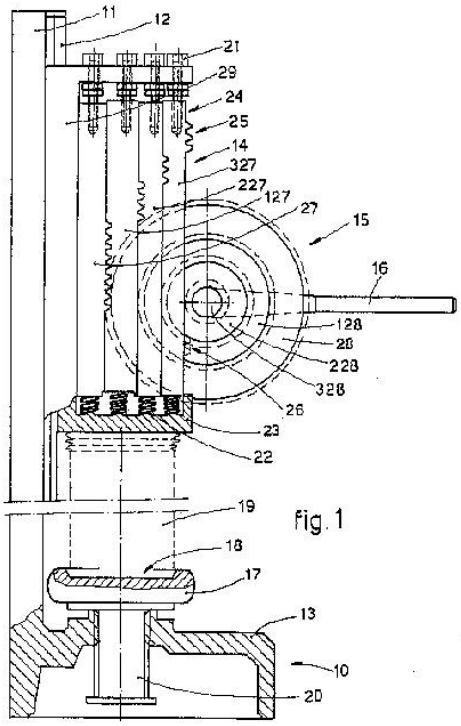

References

Informative references

Attention is drawn to the following places, which may be of interest for search:

Arrangements for operating and controlling machines or devices for cutting, cutting-out, stamping-out, punching, perforating, or severing by means other than cutting. Means for actuating the cutting member to effect the cut rack-and-pinion means	B26D 5/083
Gearings comprising essentially only toothed gears or friction members and not capable of conveying indefinitely-continuing rotary motion for interconverting rotary motion and reciprocating motion comprising a rack	F16H 19/04

B30B 1/26

by cams, eccentrics, or cranks

Definition statement

This place covers:

Presses for which one part of the cam, eccentric, or crank unit is in direct contact or in contact through simple thrust or tension members only, to the press ram or platen. Illustrative example of subject matter classified in this group:

DE-A-4437957

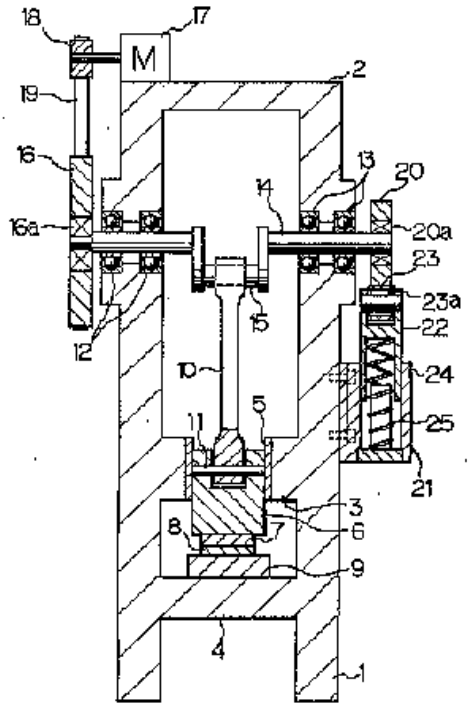

References

Informative references

Attention is drawn to the following places, which may be of interest for search:

Arrangements for operating and controlling machines or devices for cutting, cutting-out, stamping-out, punching, perforating, or severing by means other than cutting. Means for actuating the cutting member to effect the cut Crank and pin means	B26D 5/14
Crankshafts, eccentric-shafts; Cranks, eccentric	F16C 3/04
Gearings comprising primarily only links or levers, with or without slides - Crank gearings; Eccentric gearings	F16H 21/18

B30B 1/261

{by cams}

Definition statement

This place covers:

Presses for which the driving unit is a cam system. Illustrative example of subject matter classified in this group:

US-A-5544576

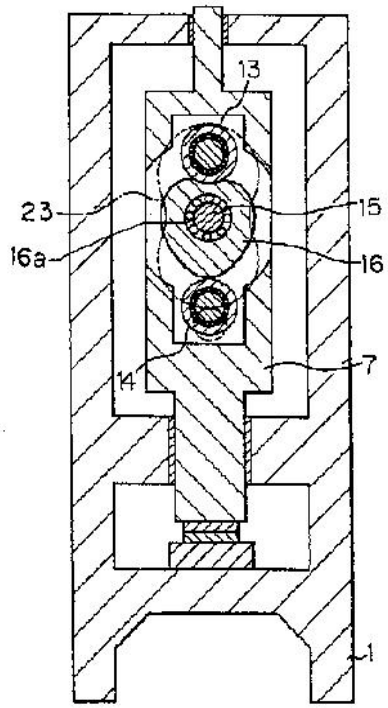

References

Informative references

Attention is drawn to the following places, which may be of interest for search:

Arrangements for operating and controlling machines or devices for cutting, cutting-out, stamping-out, punching, perforating, or severing by means other than cutting. Means for actuating the cutting member to effect the cut Cam means	B26D 5/16

B30B 1/263

{work stroke adjustment means}

Definition statement

This place covers:

Illustrative example of subject matter classified in this group:

DE-A-3507328

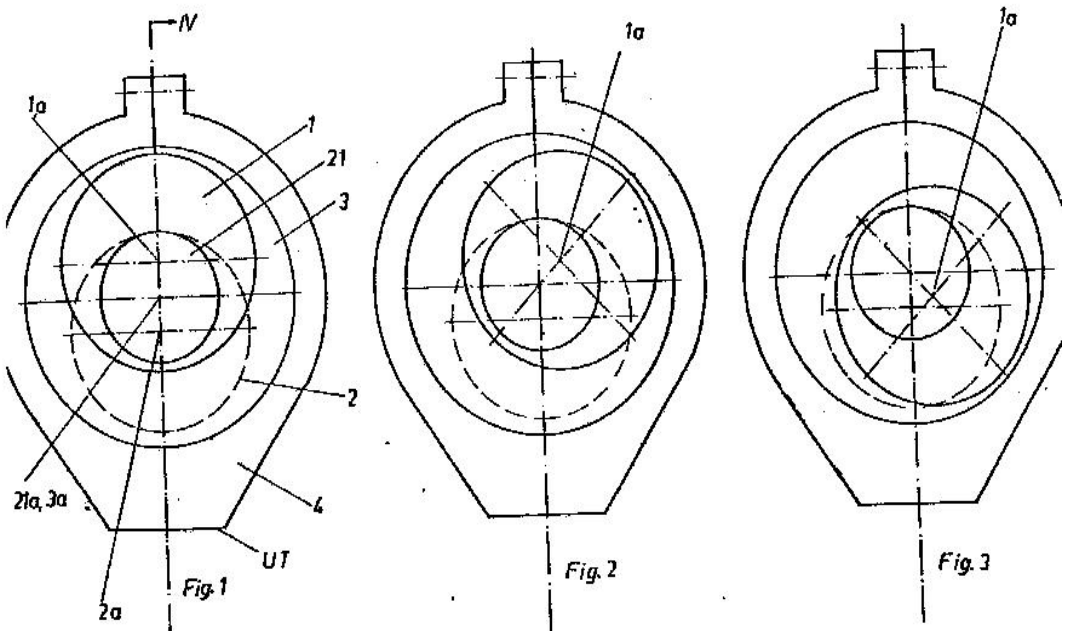

References

Informative references

Attention is drawn to the following places, which may be of interest for search:

Shafts Crankshafts, eccentric-shafts; Cranks; Eccentrics Adjustable cranks or eccentrics	F16C 3/28

B30B 1/265

{using a fluid connecting unit between drive shaft and press ram}

Definition statement

This place covers:

Presses for which the fluid connecting associated with another type of driving unit are classified in B30B 1/007. Illustrative example of subject matter classified in this group:

DE-A-3507327

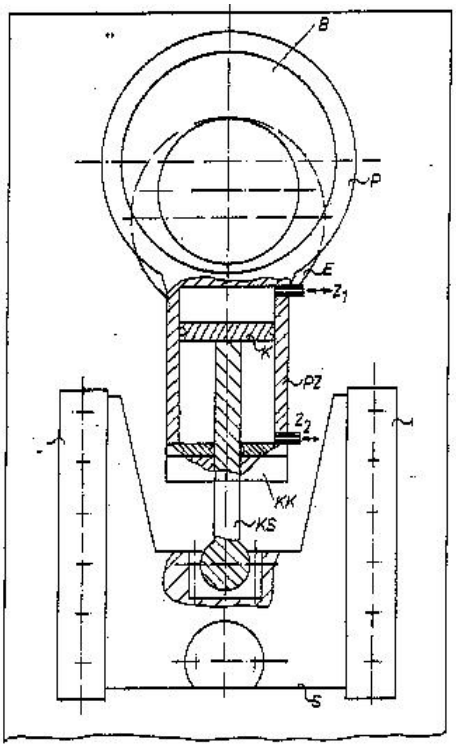

B30B 1/266

{Drive systems for the cam, eccentric or crank axis}

Definition statement

This place covers:

Illustrative example of subject matter classified in this group:

US-A-4461206

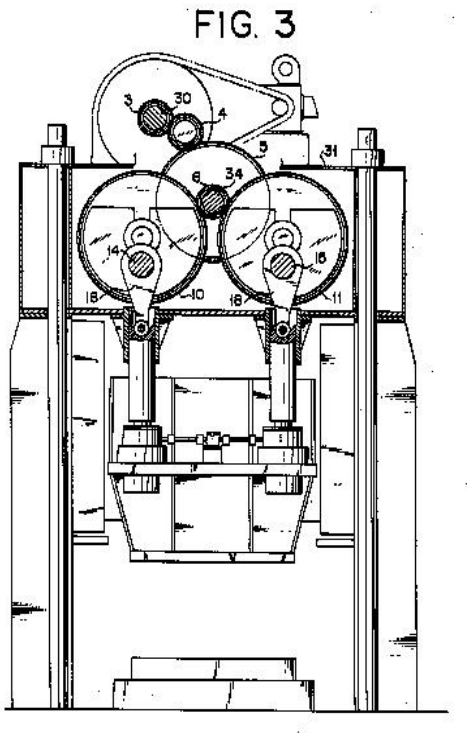

B30B 1/268

{using a toggle connection between driveshaft and press ram}

Definition statement

This place covers:

Presses for which the driving force follows the line that can be drawn between the two ends of the two bars system constituting the toggle. Illustrative example of subject matter classified in this group:

US-A-2633094

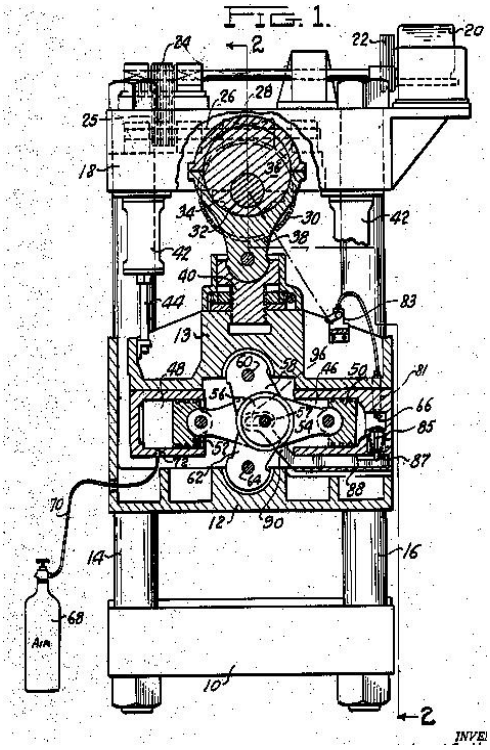

B30B 1/28

the cam, crank, or eccentric being disposed below the lower platen or table and operating to pull down the upper platen or slide

Definition statement

This place covers:

Illustrative example of subject matter classified in this group:

WO-A-2006136045

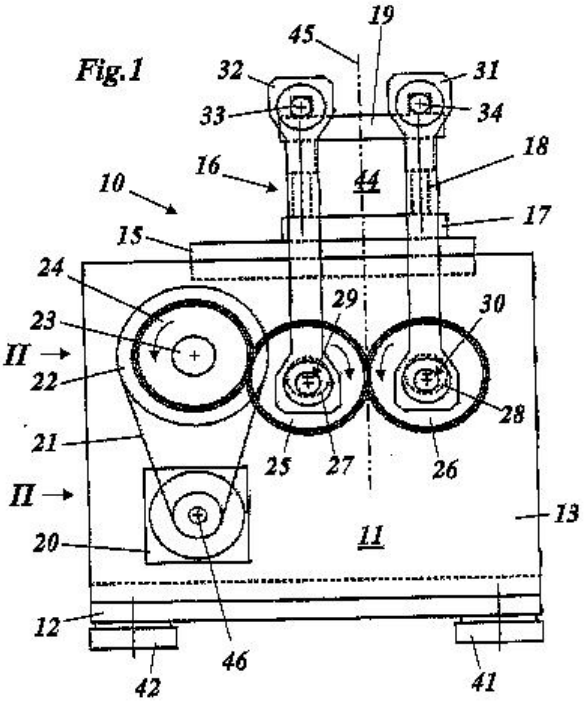

B30B 1/30

by the pull of chains or ropes {(B30B 9/3071 takes precedence)}

Definition statement

This place covers:

Presses for which one part of a chain or a rope is in direct contact or in contact through simple thrust or tension members or pulleys only, to the press ram or platen. Illustrative example of subject matter classified in this group:

DE-U-8706683

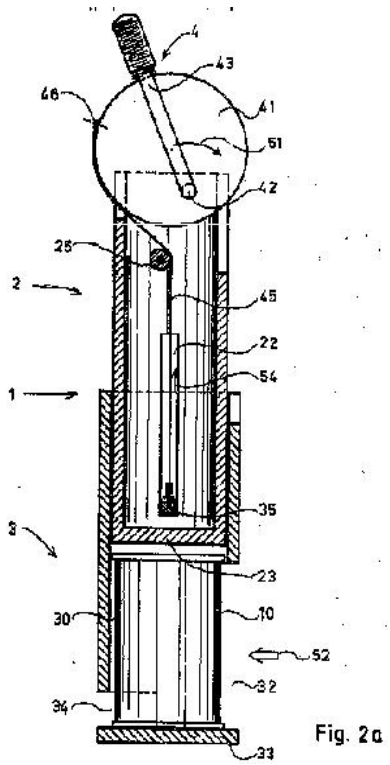

Fig. 2a

B30B 1/32

by plungers under fluid pressure

Definition statement

This place covers:

Presses for which the fluid actuation is generated by a means connected to the cylinder/plunger unit. Illustrative example of subject matter classified in this group:

DE-A-4409029

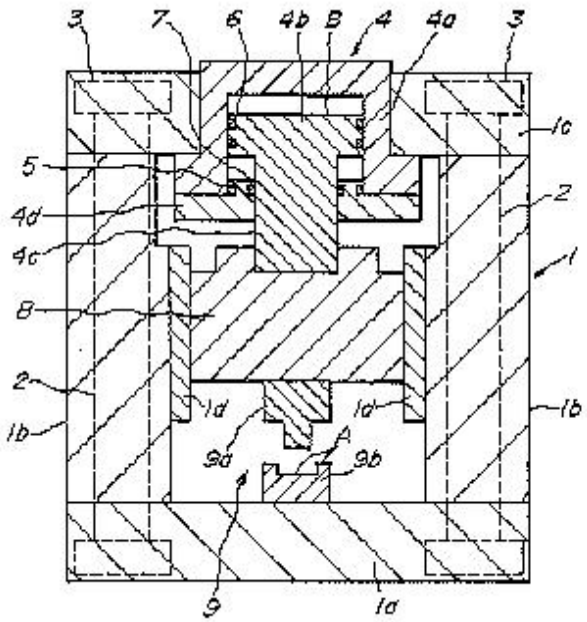

References

Informative references

Attention is drawn to the following places, which may be of interest for search:

Drives for forging presses operated by hydraulic or liquid pressure	B21J 9/12
Shearing machines or shearing devices cutting by blades which move parallel to themselves characterised by drives or gearings therefor actuated by fluid or gas pressure	B23D 15/14
Arrangements for operating and controlling machines or devices for cutting, cutting-out, stamping-out, punching, perforating, or severing by means other than cutting. Means for actuating the cutting member to effect the cut. Fluid-pressure means	B26D 5/12
Systems acting by means of fluids in general; fluid-pressure actuators, e.g. servo-motors; details of fluid-pressure systems, not otherwise provided for	F15B

B30B 1/323

{using low pressure long stroke opening and closing means, and high pressure short stroke cylinder means}

Definition statement

This place covers:

Illustrative example of subject matter classified in this group:

DE-U-202006016685

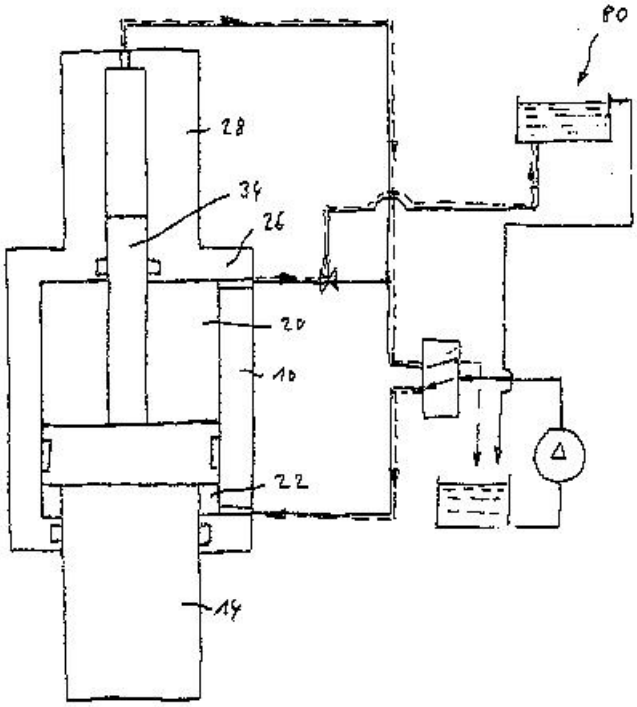

B30B 1/326

{operated by hand or foot, e.g. using hydraulic jacks}

Definition statement

This place covers:

Presses for which an operator applies the driving force on the pump with the hand or the foot.
Illustrative example of subject matter classified in this group:

D-A-E102008006105

B30B 1/34

involving a plurality of plungers acting on the platen (gas operated B30B 1/38)

Definition statement

This place covers:

Illustrative example of subject matter classified in this group:

US-A-4873923

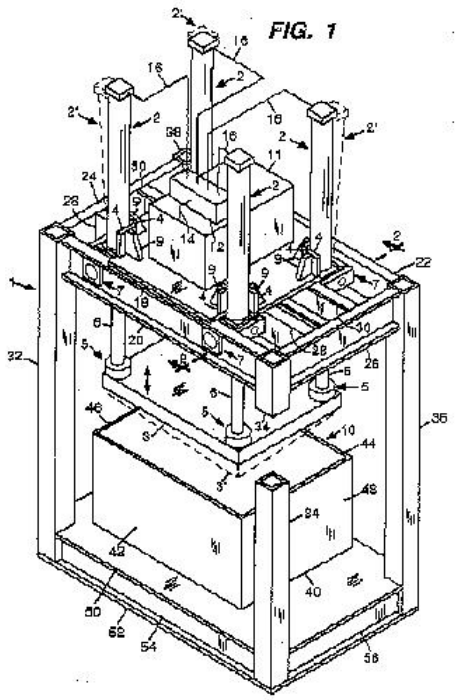

Special rules of classification

Exception to rule 1 indicated in B30B 1/00.

B30B 1/36

having telescoping plungers (gas operated B30B 1/38)

Definition statement

This place covers:

Illustrative example of subject matter classified in this group:

GB-A-281335

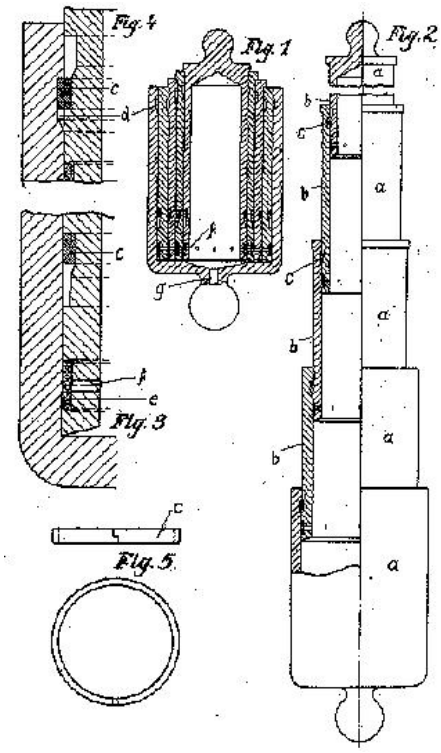

B30B 1/38

wherein the plungers are operated by pressure of a gas, e.g. steam, air

Definition statement

This place covers:

Illustrative example of subject matter classified in this group:

US-A-5182985

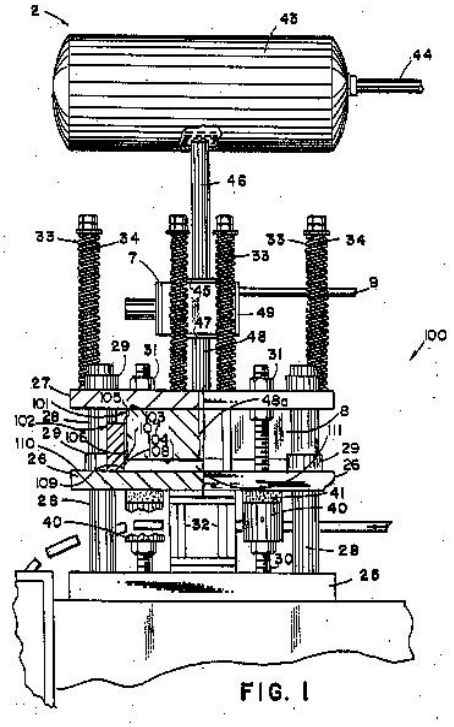

B30B 1/40

by wedge means

Definition statement

This place covers:

Presses for which one part of the wedge unit is in direct contact or in contact through simple thrust or tension members only, to the press ram or platen. Illustrative example of subject matter classified in this group:

US-A-4535689

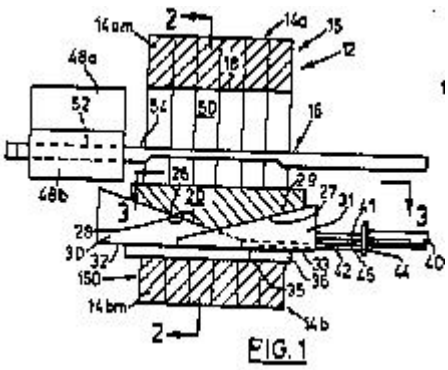

B30B 1/42

by magnetic means, e.g. electromagnetic

Definition statement

This place covers:

Presses for which one part of the magnetic, e.g. electro-magnetic unit is in direct contact or in contact through simple thrust or tension members only, to the press ram or platen. Illustrative example of subject matter classified in this group:

US-A-3783662

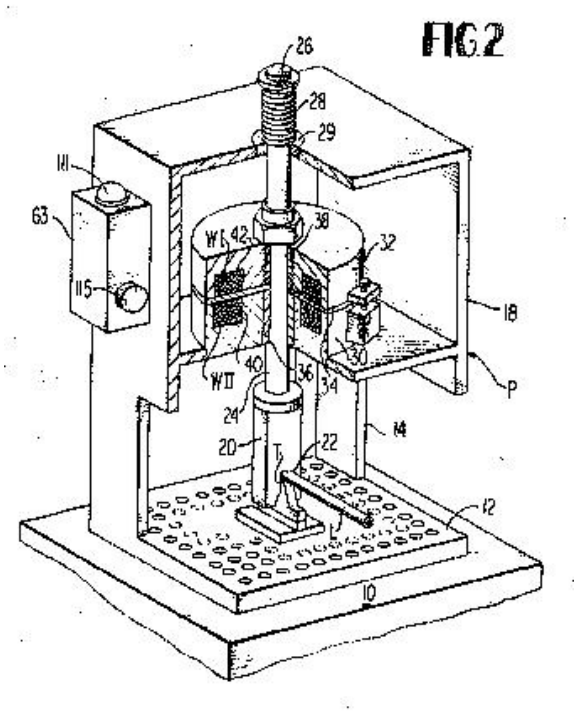

References

Informative references

Attention is drawn to the following places, which may be of interest for search:

Arrangements for operating and controlling machines or devices for cutting, cutting-out, stamping-out, punching, perforating, or severing by means other than cutting Means for actuating the cutting member to effect the cut Electric, magnetic, piezo-electric, electro-magnetic means	B26D 5/086

B30B 3/00

Presses characterised by the use of rotary pressing members, e.g. rollers, rings, discs

Definition statement

This place covers:

Presses characterised by the use of rotary pressing members in general and also those presses characterised by the use of rotary pressing members, for particular purposes, which are not provided for elsewhere. Illustrative example of subject matter classified in this group:

DE-U-29606115

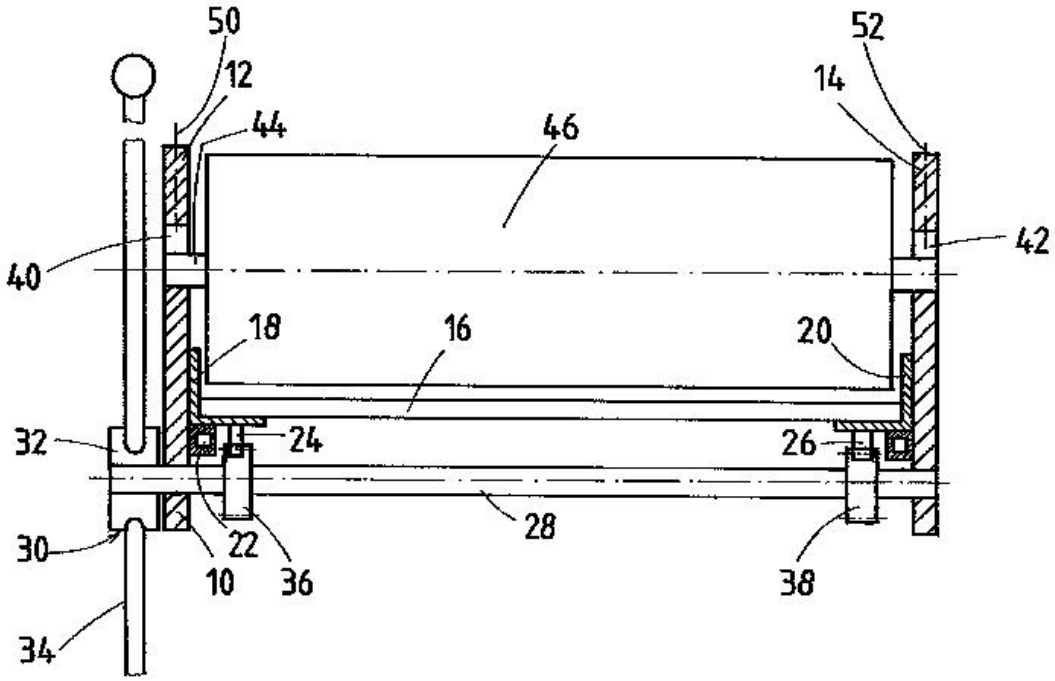

DE4328505

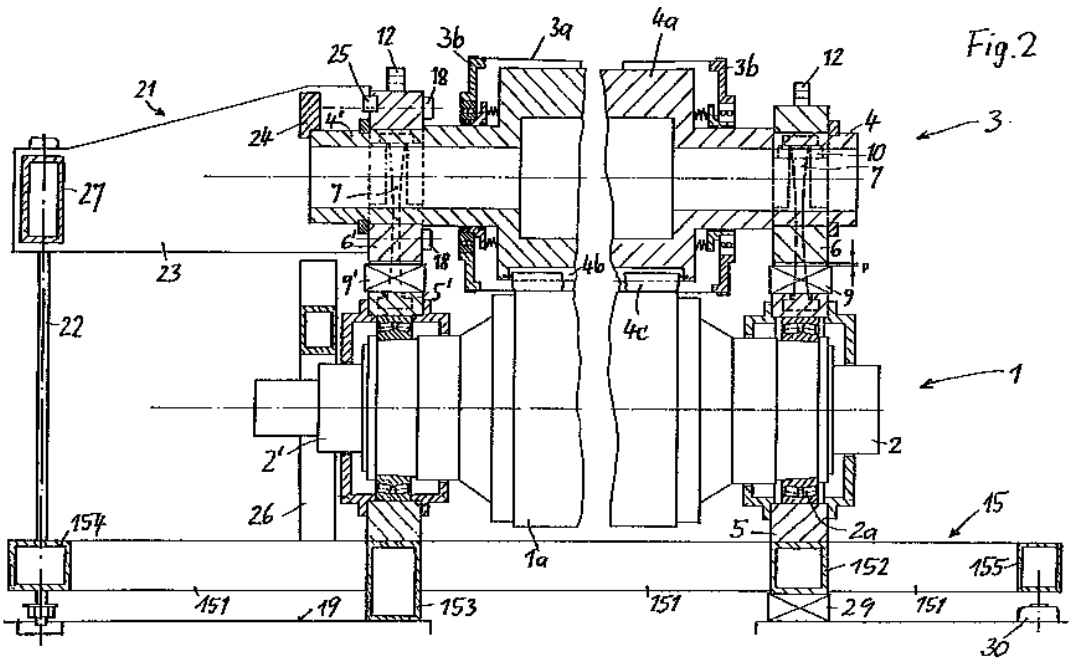

References

Informative references

Attention is drawn to the following places, which may be of interest for search:

Baling presses with compression means other than rams performing a rectilinear movement	B30B 9/3082
Crushing or disintegrating by roller mills	B02C 4/00
Wet presses Pressure rolls	D21F 3/08
Papermaking machine - Pressure rolls - Calendars	D21G 1/00

B30B 3/005

{Roll constructions}

Definition statement

This place covers:

Illustrative example of subject matter classified in this group:

EP-A-0897751

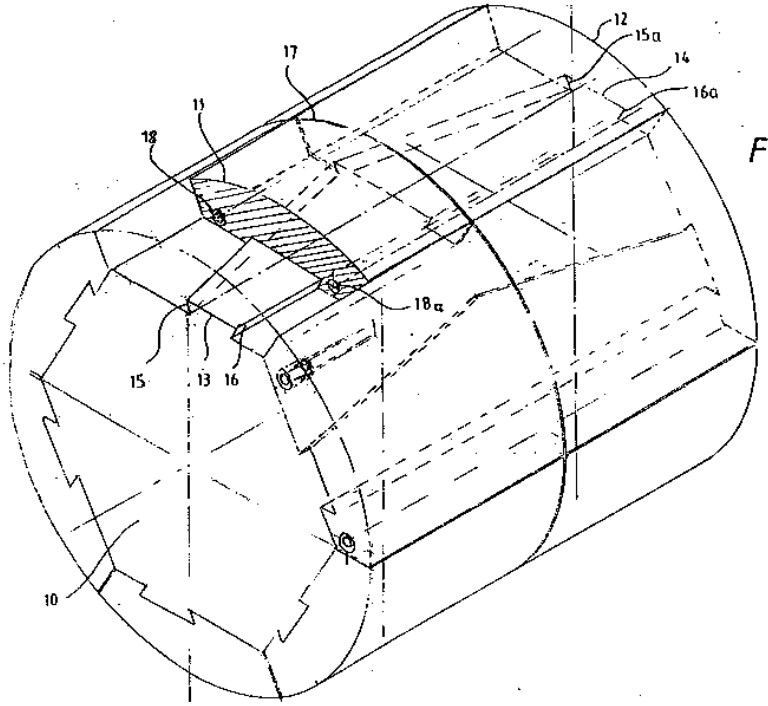

Fig. 1

B30B 3/02

co-operating with a fixed member

Definition statement

This place covers:

Illustrative example of subject matter classified in this group:

EP-A-0397158

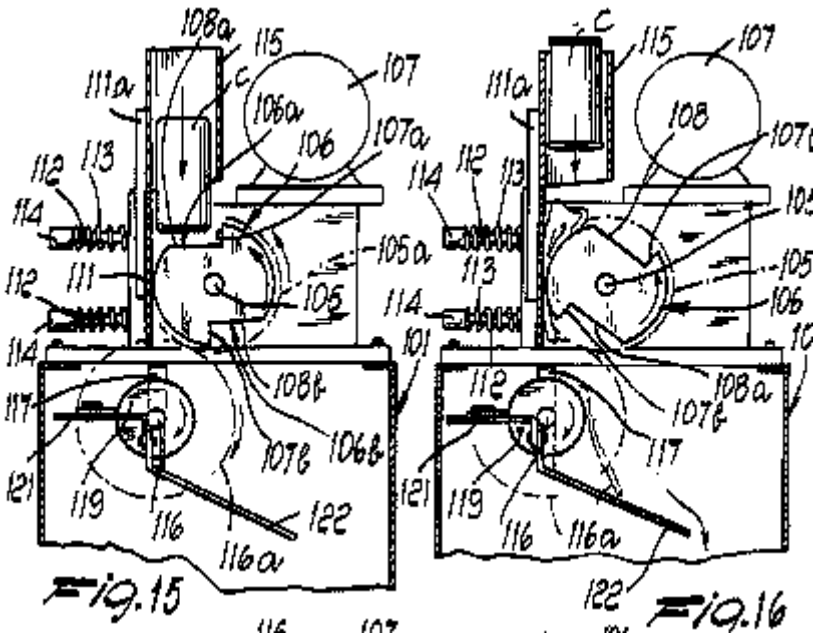

Fig.15 Fig.16

B30B 3/04

co-operating with one another, e.g. with co-operating cones

Definition statement

This place covers:

Illustrative example of subject matter classified in this group:

DE-A-102007031879

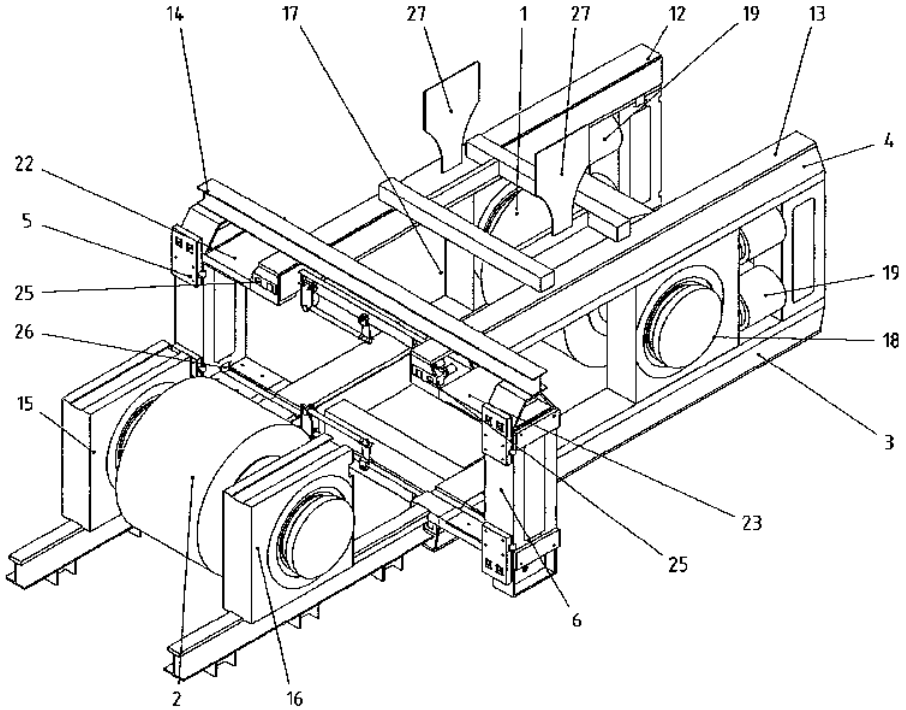

B30B 3/045

{with co-operating cones}

Definition statement

This place covers:

Illustrative example of subject matter classified in this group:

US-A-4432278

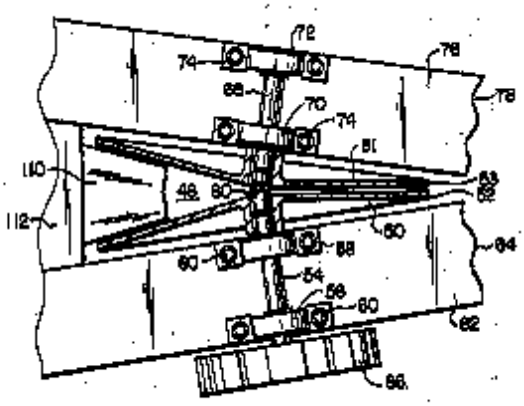

FIG. 5

B30B 3/06

arranged one within another, e.g. with a roller disposed within a rotating ring and co-operating with the inner surface thereof

Definition statement

This place covers:

Illustrative example of subject matter classified in this group:

US-A-4444100

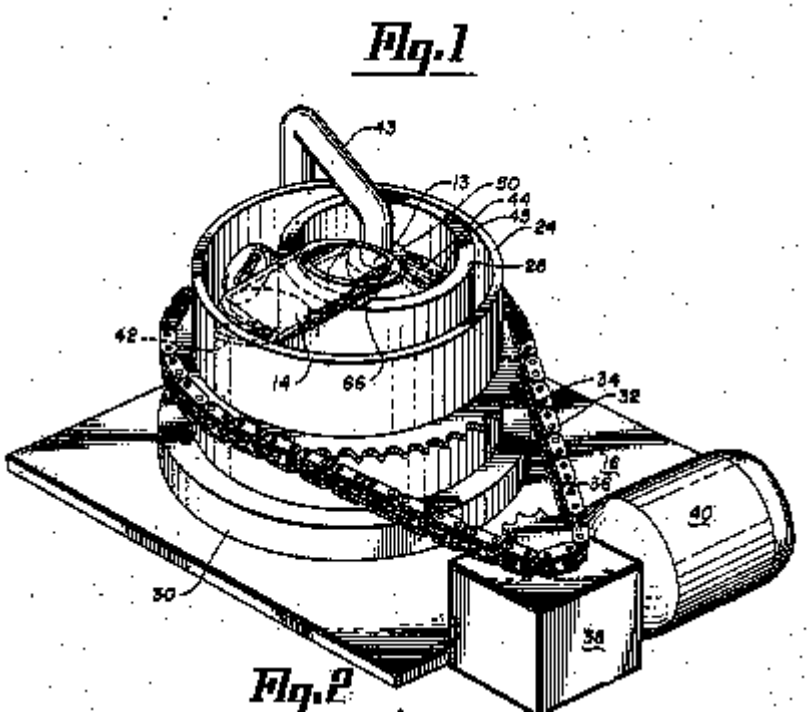

References

Informative references

Attention is drawn to the following places, which may be of interest for search:

Presses specially adapted for forming shaped articles from material in particulate or plastic state, e.g. briquetting presses, tableting presses - Roller-and-ring machines, i.e. with roller disposed within a ring and co-operating with the inner surface of the ring	B30B 11/20

B30B 5/00

Presses characterised by the use of pressing means other than those mentioned in the preceding groups

Definition statement

This place covers:

Presses characterised by the use of pressing means other than those mentioned in the preceding groups B30B 1/00 - B30B 3/00 in general and also those presses characterised by the use of pressing means other than those mentioned in the preceding groups B30B 1/00 - B30B 3/00, for particular purposes, which are not provided for elsewhere. Illustrative example of subject matter classified in this group:

DE-A-3731769

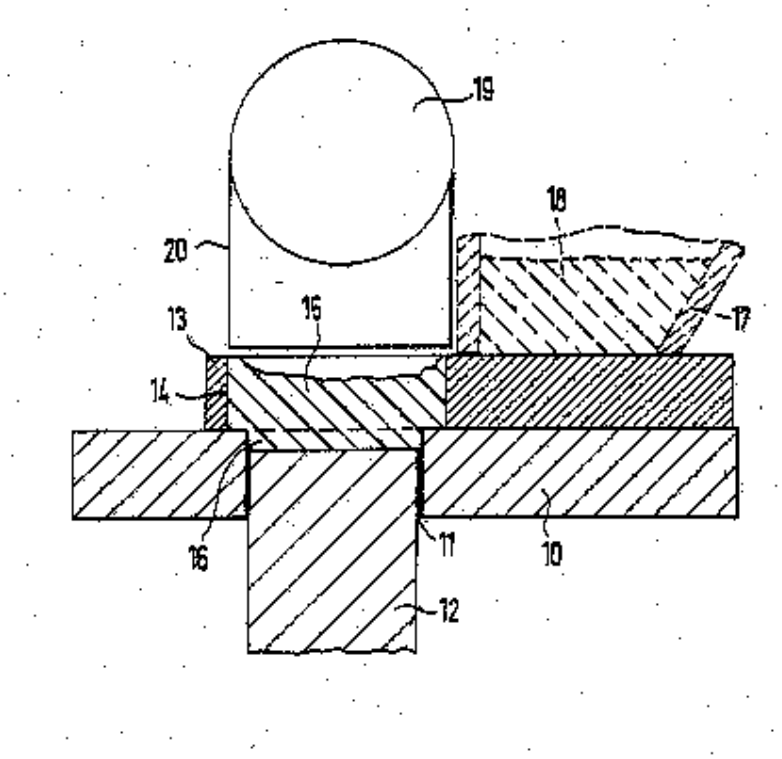

References

Informative references

Attention is drawn to the following places, which may be of interest for search:

Shaping without cutting otherwise than using rigid devices or tools or yieldable or resilient pads, by applying fluid pressure	B21D 26/02
Methods or apparatus for laminating characterised by the pressing technique, e.g. using action of vacuum or fluid pressure and subgroups	B32B 37/10

B30B 5/02

wherein the pressing means is in the form of a flexible element, e.g. diaphragm, urged by fluid pressure

Definition statement

This place covers:

Illustrative example of subject matter classified in this group:

DE-A-2039930

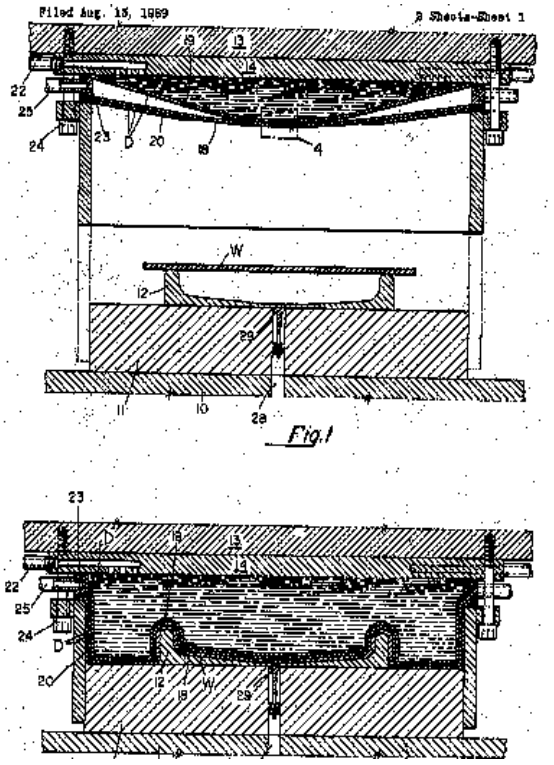

References

Informative references

Attention is drawn to the following places, which may be of interest for search:

Presses using a press ram by an elastic bag or diaphragm expanded by fluid pressure	B30B 1/003
Presses for squeezing-out liquid from liquid-containing material using a flexible member, e.g. diaphragm, urged by fluid pressure	B30B 9/22

Lining or sheathing applied by "rubber" bag or diaphragm	B29C 63/16

B30B 5/04

wherein the pressing means is in the form of an endless band

Definition statement

This place covers:

Illustrative example of subject matter classified in this group:

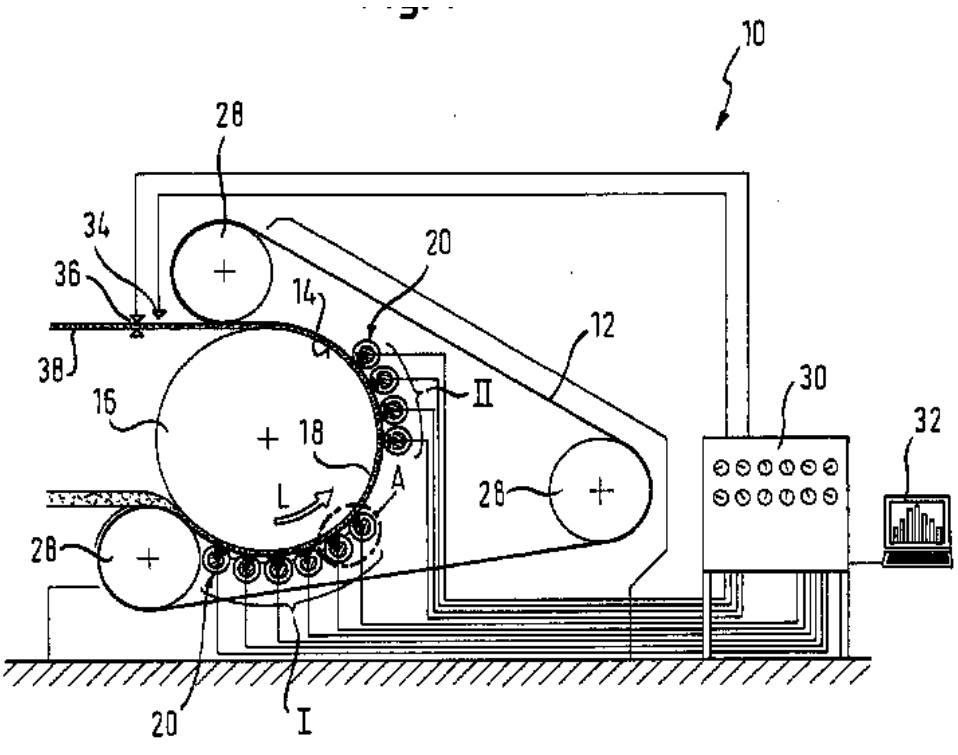

EP-A-1389510

References

Informative references

Attention is drawn to the following places, which may be of interest for search:

Baling presses for straw, hay or the like - Rotobalers, i.e. machines for forming cylindrical bales by winding and pressing	A01F 15/07
Veneer presses; Press plates; Plywood presses - with endless arrangement of moving press plates, belts, or the like	B27D 3/04
Manufacture of substantially flat articles, e.g. boards, from particles or fibres characterised by using continuously acting presses having endless belts or chains moved within the compression zone	B27N 3/24
Methods or apparatus for laminating - Pressing using at least one press band	B32B 37/1027

B30B 5/06

co-operating with another endless band

Definition statement

This place covers:

Illustrative example of subject matter classified in this group:

WO-A-8903288

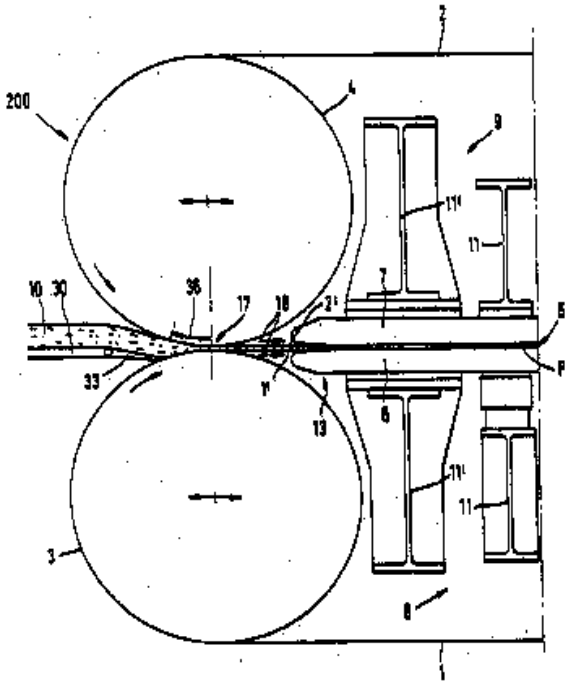

B30B 5/062

{urged by directly-acting fluid pressure}

Definition statement

This place covers:

Illustrative example of subject matter classified in this group:

EP-A-0394655

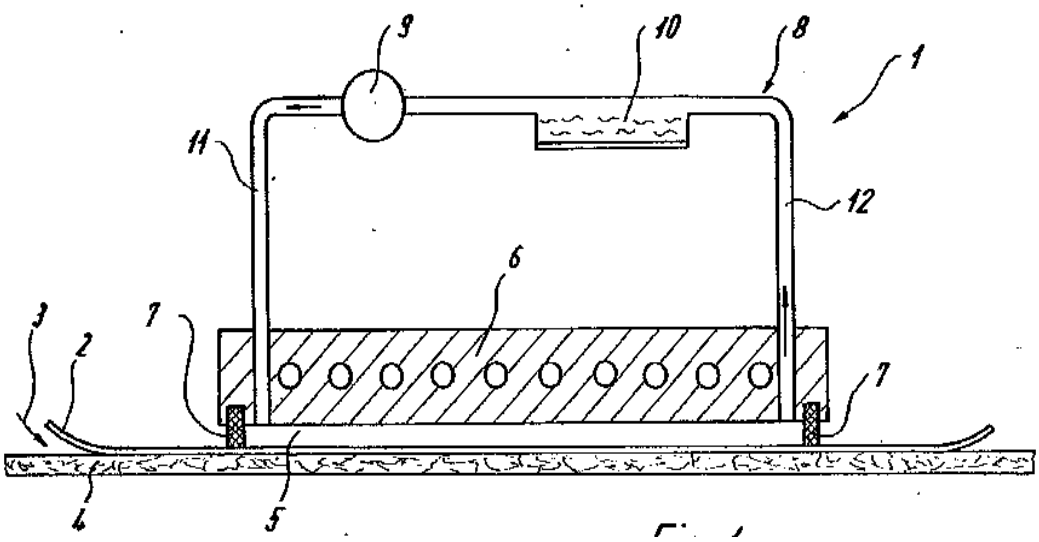

B30B 5/065

{using anti-friction means for the pressing band}

Definition statement

This place covers:

Illustrative example of subject matter classified in this group:

EP-A-0052359

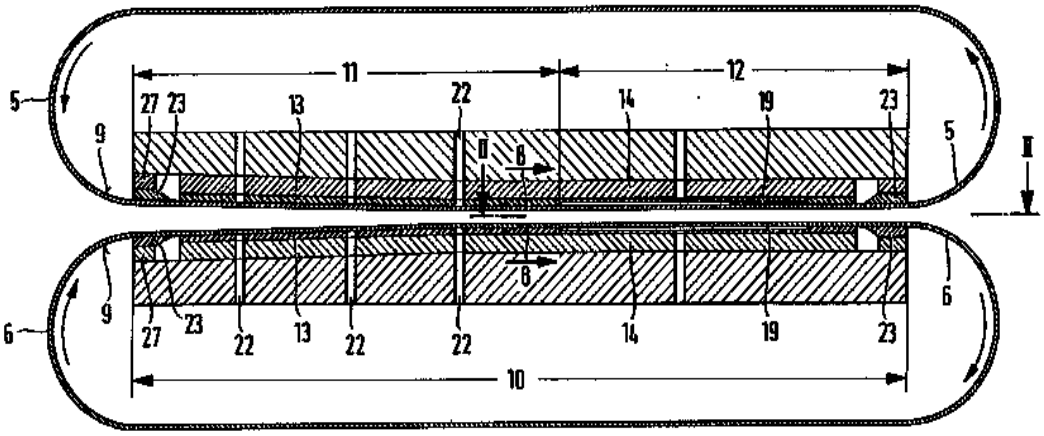

B30B 5/067

{using anti-friction roller means}

Definition statement

This place covers:

Illustrative example of subject matter classified in this group:

DE-A-102005053920

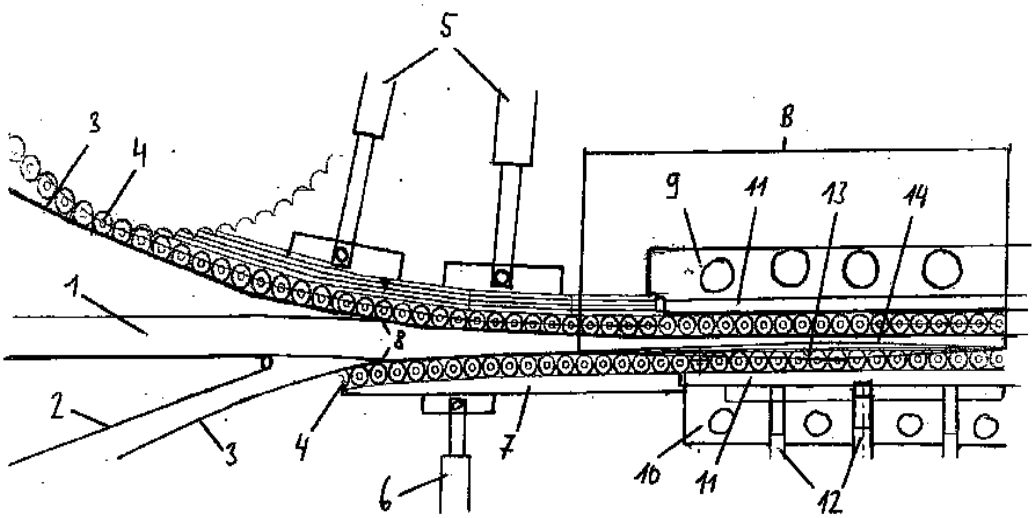

B30B 7/00

Presses characterised by a particular arrangement of the pressing members

Definition statement

This place covers:

Presses characterised by a particular arrangement of the pressing members in general and also those presses characterised by a particular arrangement of the pressing members, which are not provided for elsewhere.

B30B 7/02

having several platens arranged one above the other

Definition statement

This place covers:

Illustrative example of subject matter classified in this group:

US-A-5634398

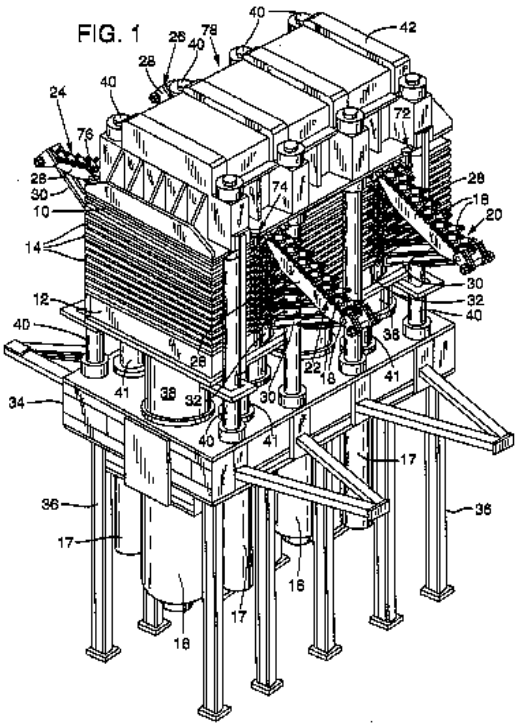

References

Informative references

Attention is drawn to the following places, which may be of interest for search:

Veneer presses; Press plates; Plywood presses - with a plurality of press plates, i.e. multi- platen hot presses	B27D 3/02
Manufacture of substantially flat articles, e.g. boards, from particles or fibres. Moulding or pressing characterised by using platen-presses	B27N 3/20
Methods or apparatus for laminating characterised by the pressing technique	B32B 37/10

B30B 7/023

{Feeding or discharging means}

Definition statement

This place covers:

Illustrative example of subject matter classified in this group:

US-A-4065003

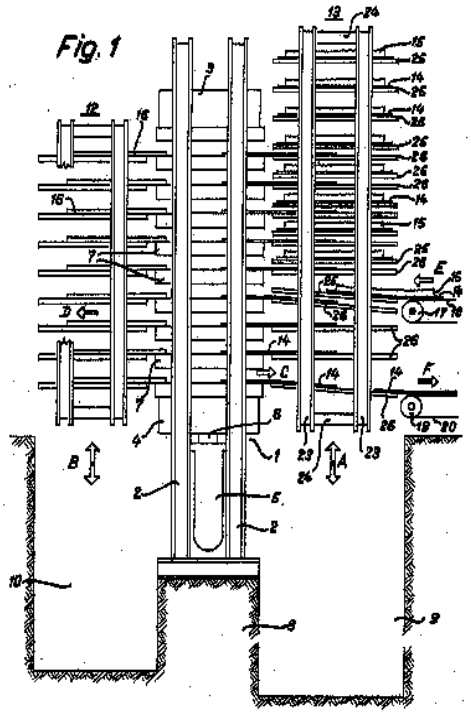

B30B 7/026

{Spacer elements; Changing means therefor}

Definition statement

This place covers:

Illustrative example of subject matter classified in this group:

JP-A-2000042789

【図4】

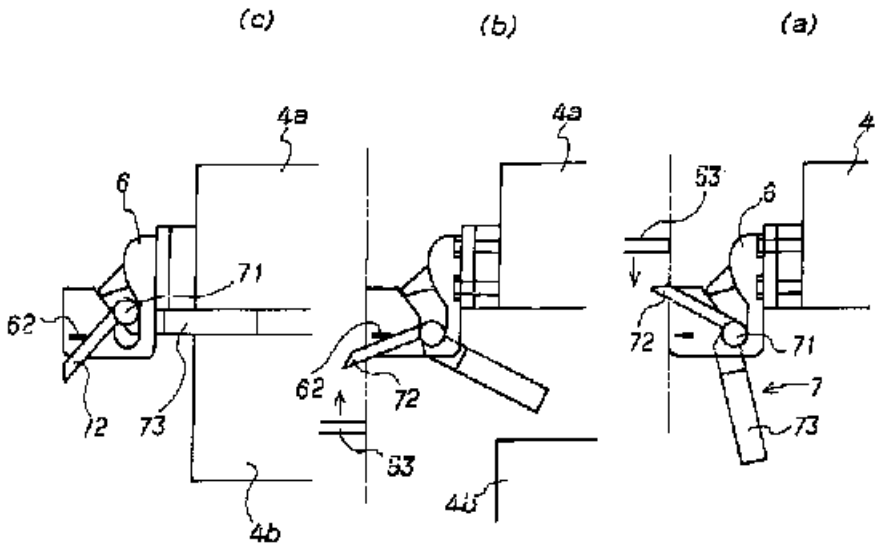

B30B 7/04

wherein pressing is effected in different directions simultaneously or in turn

Definition statement

This place covers:

Illustrative example of subject matter classified in this group:

EP-A-0609825

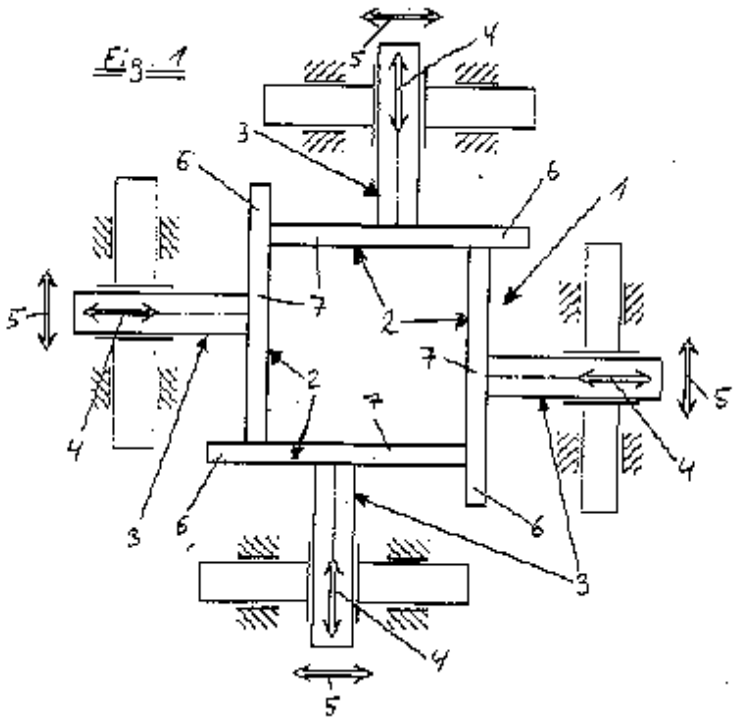

References

Informative references

Attention is drawn to the following places, which may be of interest for search:

Presses for baling with pre-compression means	B30B 9/3078
Presses specially adapted for forming shaped articles from material in particulate or plastic state, e.g. briquetting presses, tableting presses using a plurality of pressing members working in different directions	B30B 11/007
Forging machines working with several hammers	B21J 7/14

B30B 9/00

Presses specially adapted for particular purposes

Definition statement

This place covers:

Presses specially adapted for particular purposes in general and also those presses specially adapted for particular purposes, which are not provided for elsewhere.

B30B 9/02

for squeezing-out liquid from liquid-containing material, e.g. juice from fruits, oil from oil-containing material (kitchen equipment A47J; filtering, e.g. straining solids from liquids, using presses in combination with filtering elements B01D; expelling water from textile fabrics or laundry D06C, D06F; drying F26 {; clothes presses D06F 69/00, D06F 71/00})

Definition statement

This place covers:

Illustrative example of subject matter classified in this group:

DE1627844

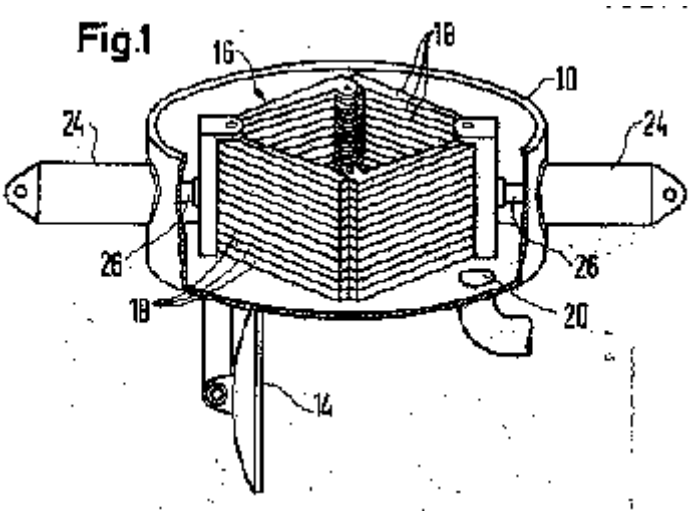

US-A-2009249967

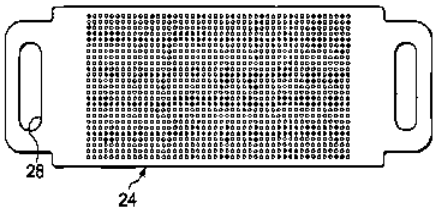

FIG. 4A

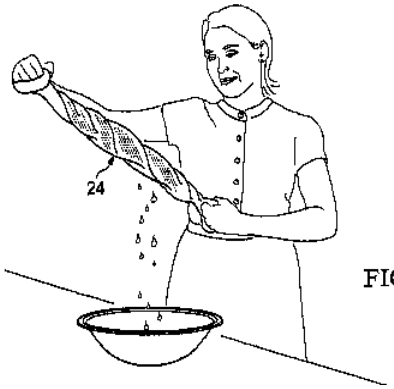

FIG. 4B

B30B 9/04

using press rams

Definition statement

This place covers:

Illustrative example of subject matter classified in this group:

JP-A-2002086299

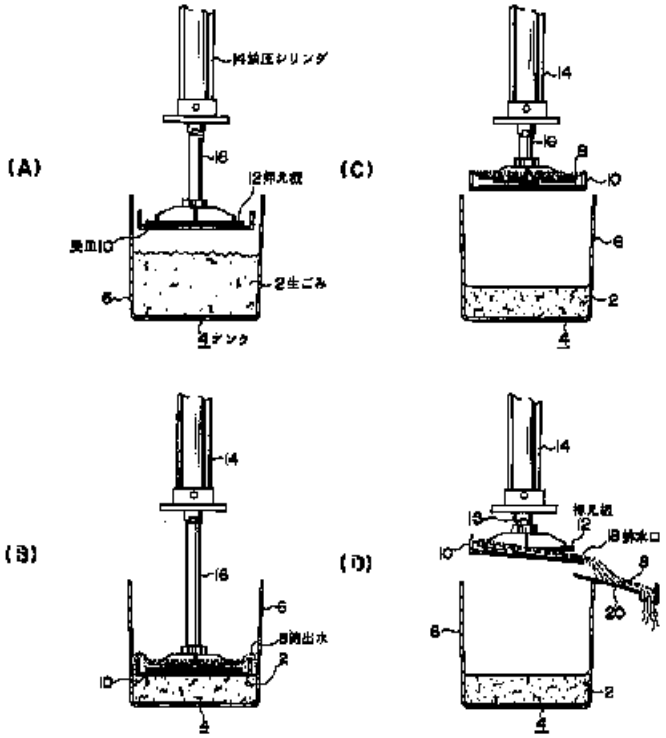

B30B 9/042

{co-operating with casings mounted on a movable carrier, e.g. turntable}

Definition statement

This place covers:

Illustrative example of subject matter classified in this group:

US-A-4303412

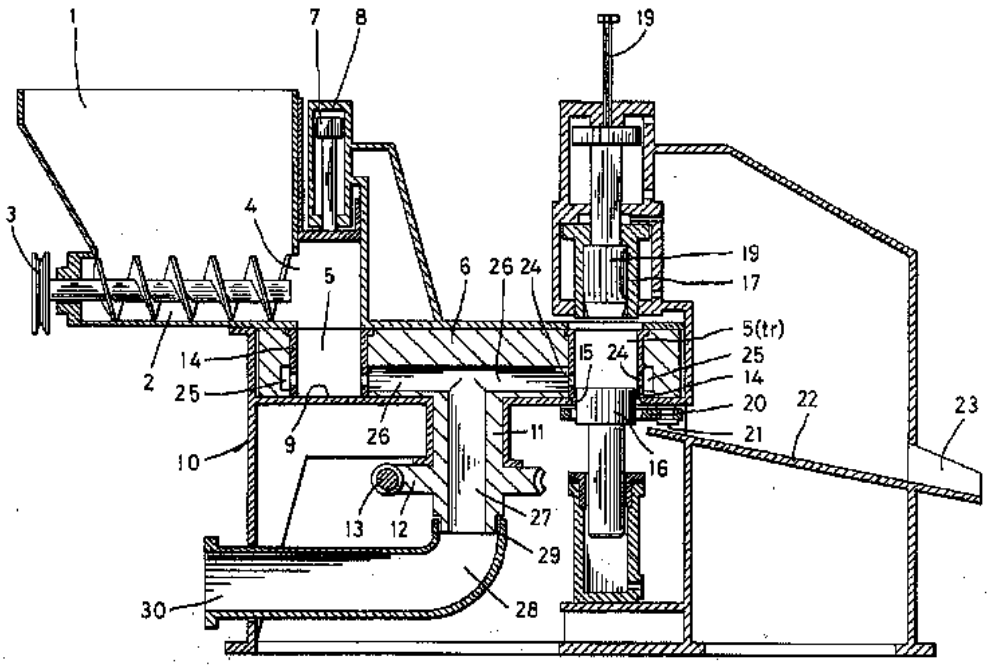

B30B 9/045

{co-operating with several adjacent casings}

Definition statement

This place covers:

Illustrative example of subject matter classified in this group:

DE-A-3105745

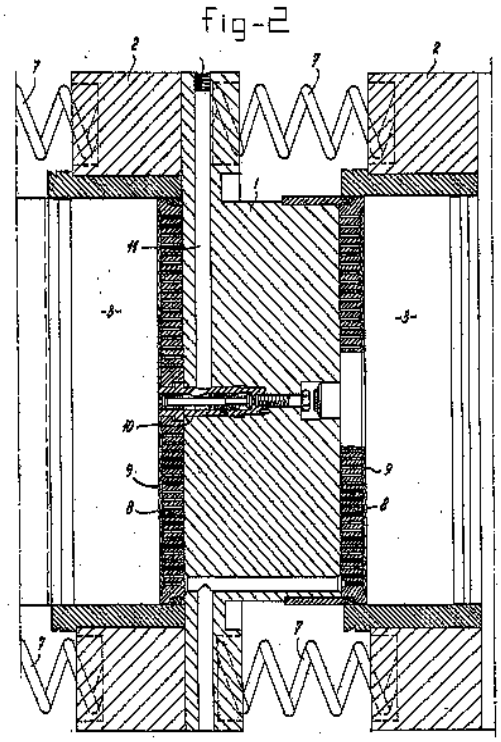

B30B 9/047

{Control arrangements}

Definition statement

This place covers:

Illustrative example of subject matter classified in this group:

FR2411699

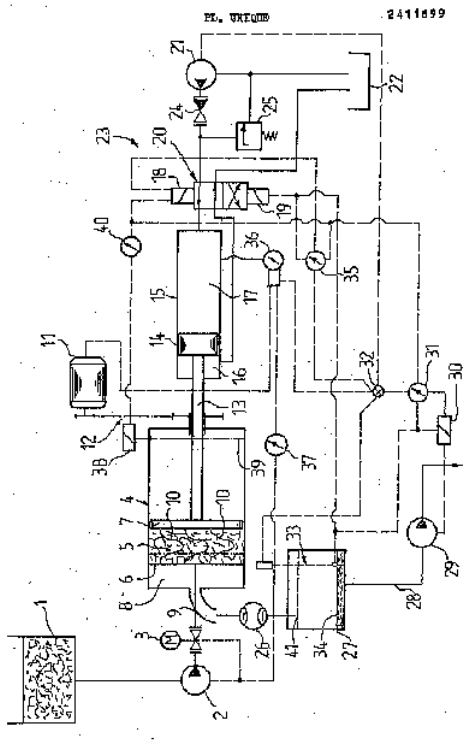

B30B 9/06

co-operating with permeable casings or strainers

Definition statement

This place covers:

Illustrative example of subject matter classified in this group:

EP-A-1394314

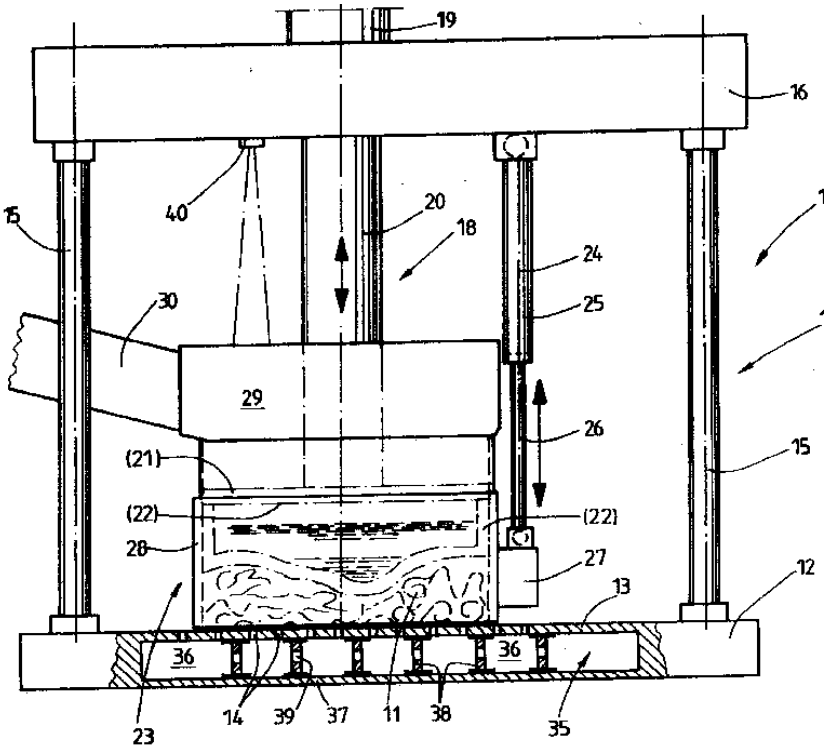
19
16
40
20
18
24
25
30
29
26
15
(21)
(22)
(22)
28
27
13
12
36
36
23
14
39
37
11
38
35

B30B 9/062

{Extrusion presses}

Definition statement

This place covers:

Illustrative example of subject matter classified in this group:

GB-A-1477418

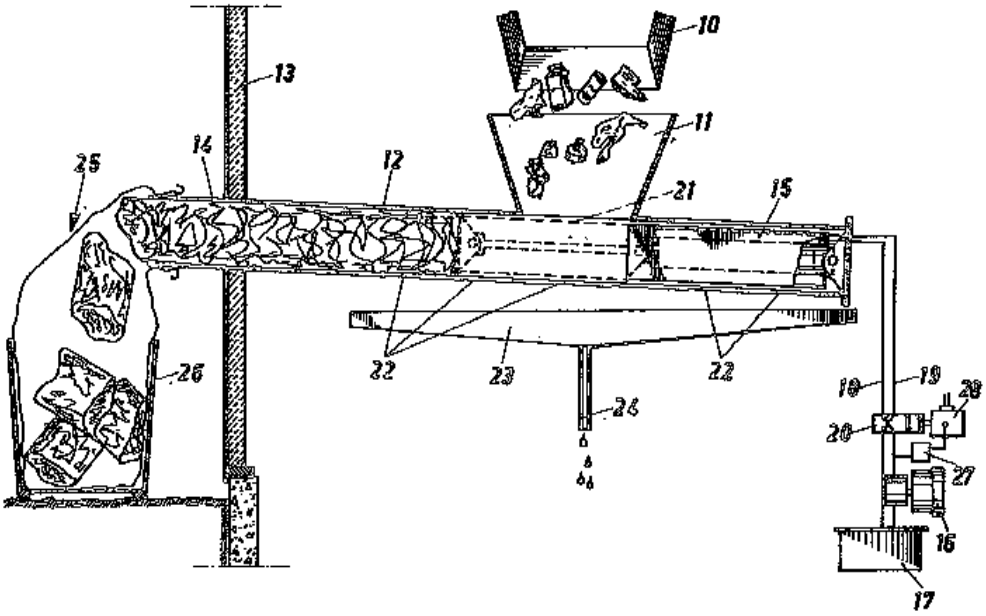

B30B 9/065

{for making briquettes, e.g. from paper}

Definition statement

This place covers:

Illustrative example of subject matter classified in this group:

DE-A-3616504

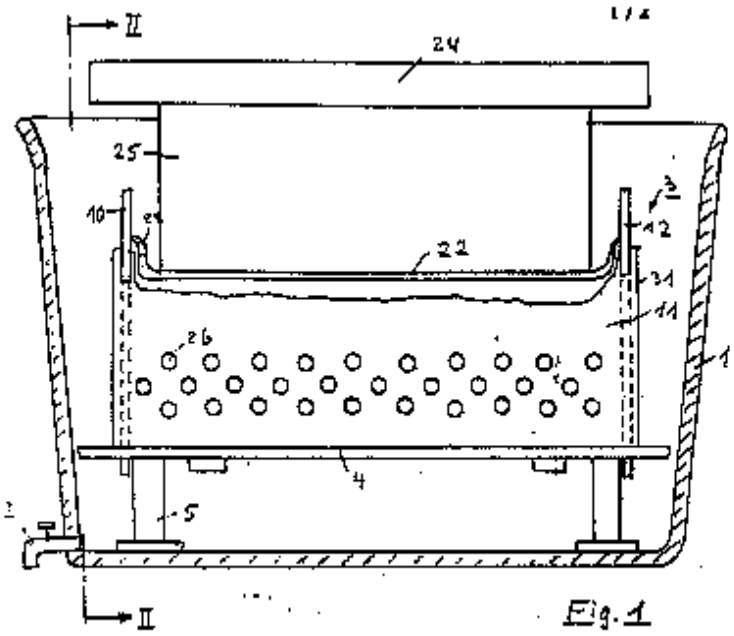

Fig. 1

B30B 9/067

{with a retractable abutment member closing one end of the press chamber}

Definition statement

This place covers:

Illustrative example of subject matter classified in this group:

EP-A-0340377

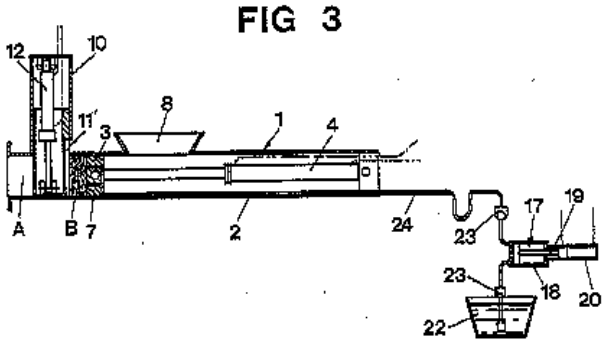

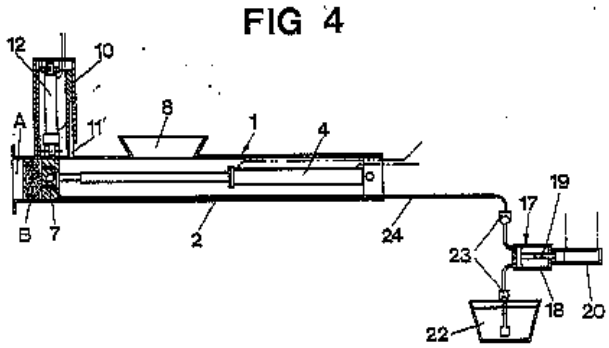

B30B 9/08

co-operating with a rotary casing

Definition statement

This place covers:

Illustrative example of subject matter classified in this group:

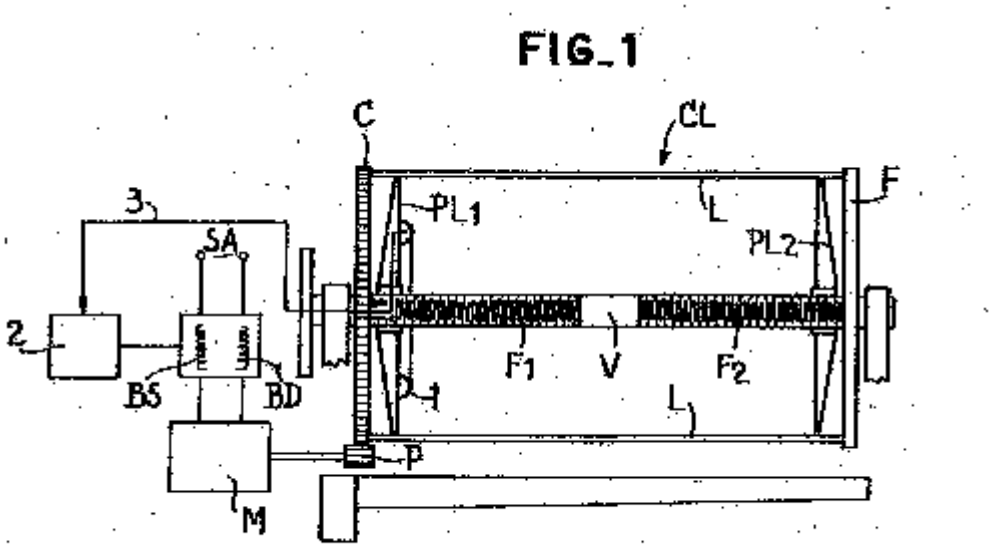

FR-A-2236655

B30B 9/10

without use of a casing

Definition statement

This place covers:

Illustrative example of subject matter classified in this group:

EP-A-0398131

Fig.1

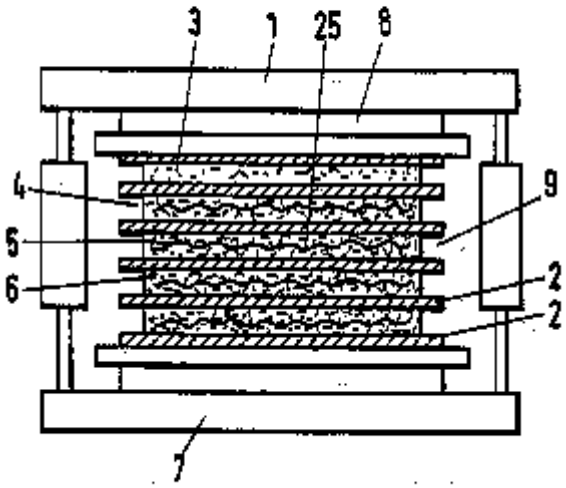

B30B 9/105

{using a press ram co-operating with an intermittently moved endless conveyor}

Definition statement

This place covers:

Illustrative example of subject matter classified in this group:

DE-A-3520248

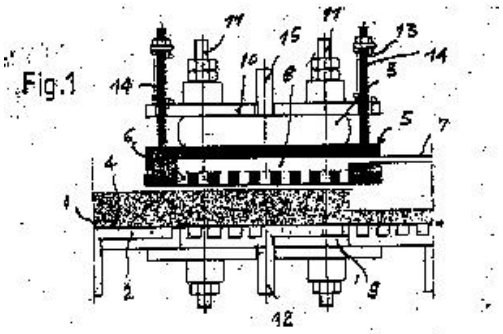
Fig.1
11
15
11
13
14
10
8
3
14
5
7
6
4
1
2
9
12

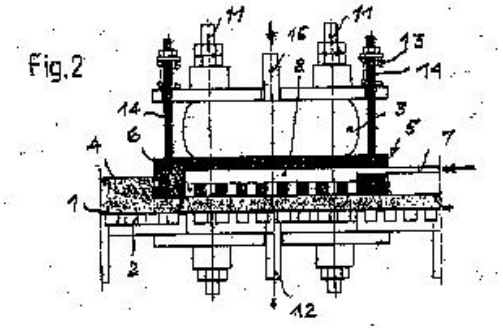
Fig.2
11
16
11
13
14
8
14
3
6
5
7
4
1
2
12

B30B 9/12

using pressing worms or screws co-operating with a permeable casing

Definition statement

This place covers:

Illustrative example of subject matter classified in this group:

GB-A-2019237

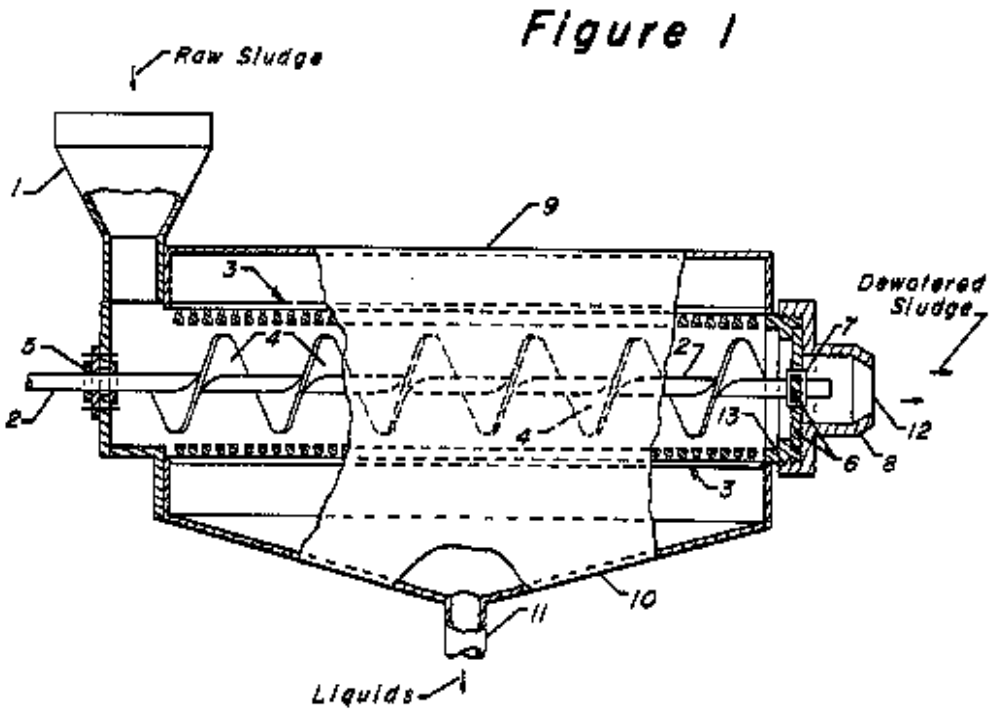

B30B 9/121

{Screw constructions}

Definition statement

This place covers:

Illustrative example of subject matter classified in this group:

FR-A-2535645

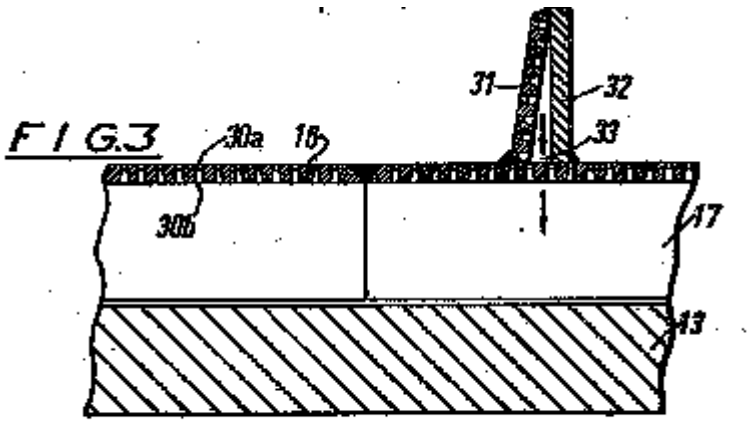

B30B 9/122

{Means preventing the material from turning with the screw or returning towards the feed hopper}

Definition statement

This place covers:

Illustrative example of subject matter classified in this group:

DE-A-2736810

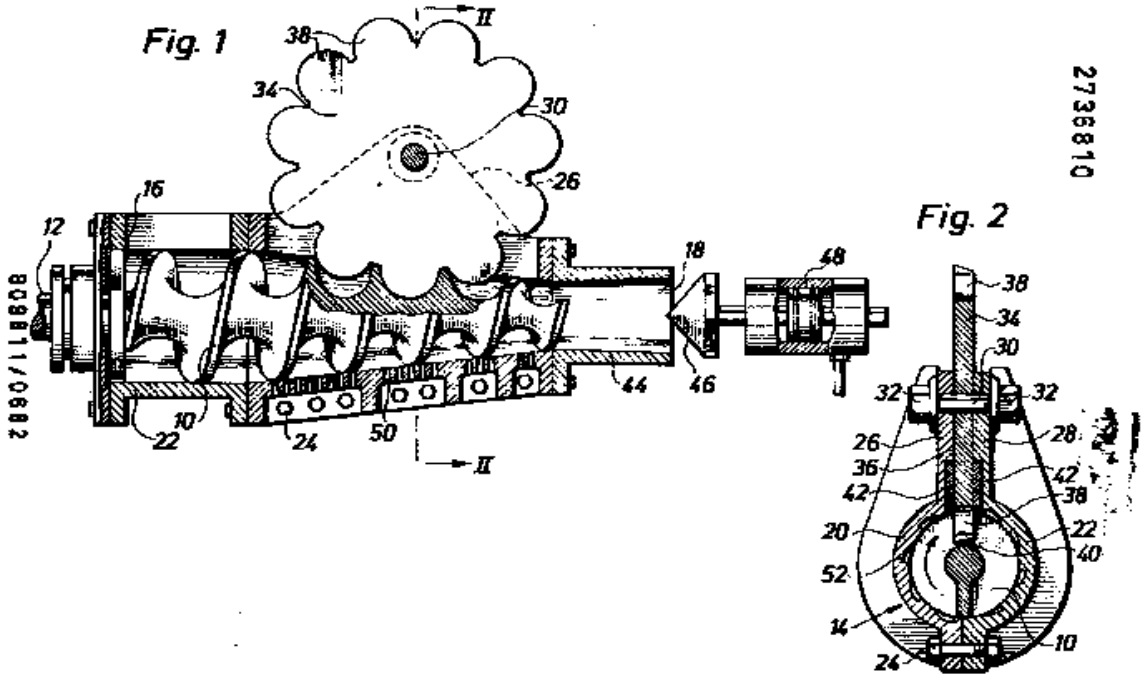

B30B 9/124

{using a rotatable and axially movable screw}

Definition statement

This place covers:

Illustrative example of subject matter classified in this group:

DE-U-8302259

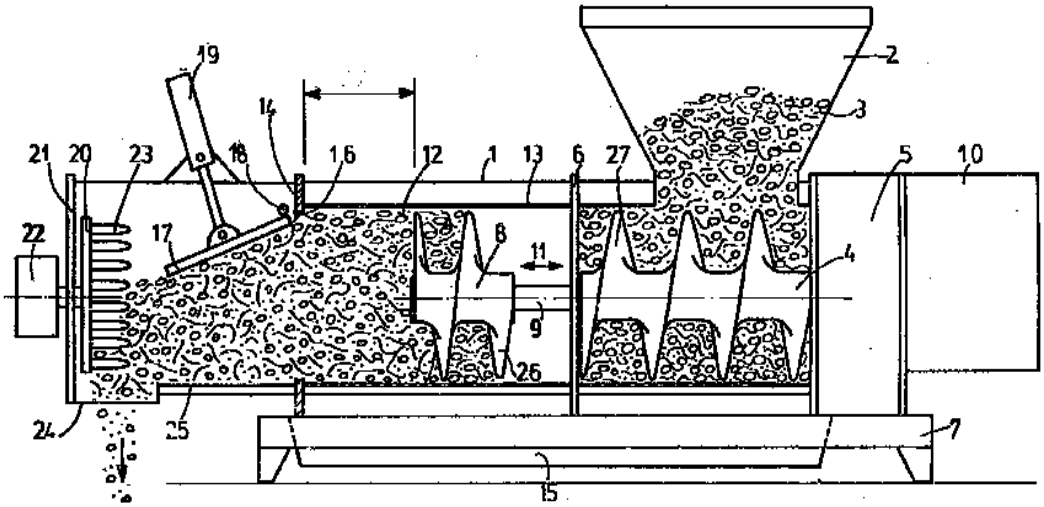

B30B 9/125

{Control arrangements}

Definition statement

This place covers:

Illustrative example of subject matter classified in this group:

DE-A-19902480

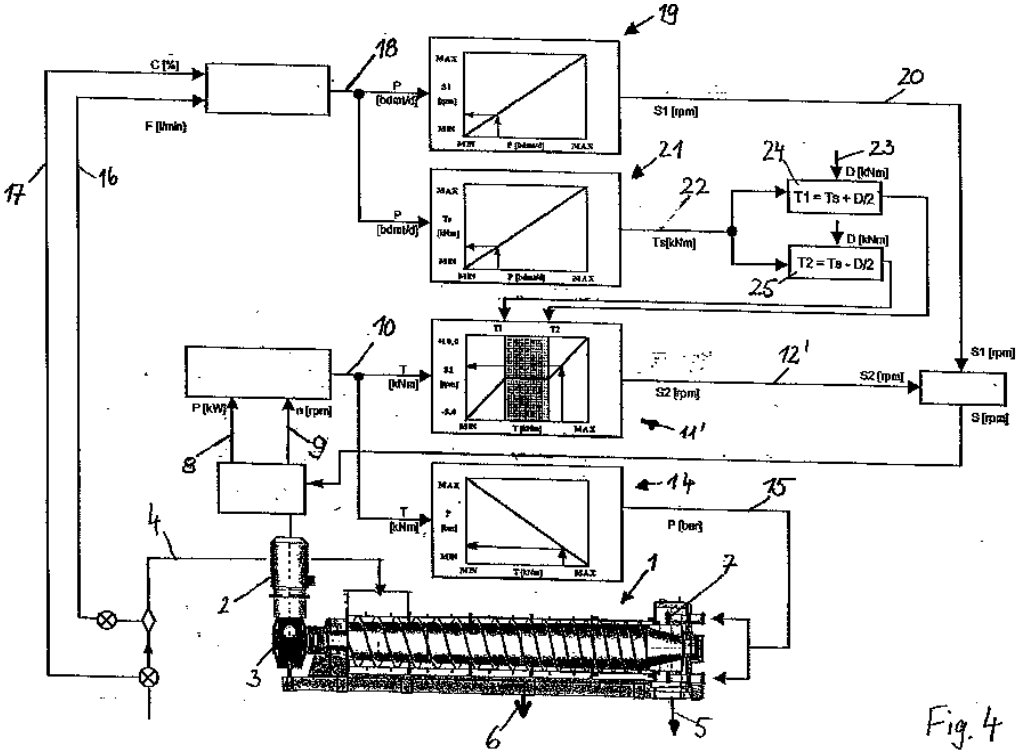

Fig. 4

B30B 9/127

{Feed means}

Definition statement

This place covers:

Illustrative example of subject matter classified in this group:

FR-A-2354293

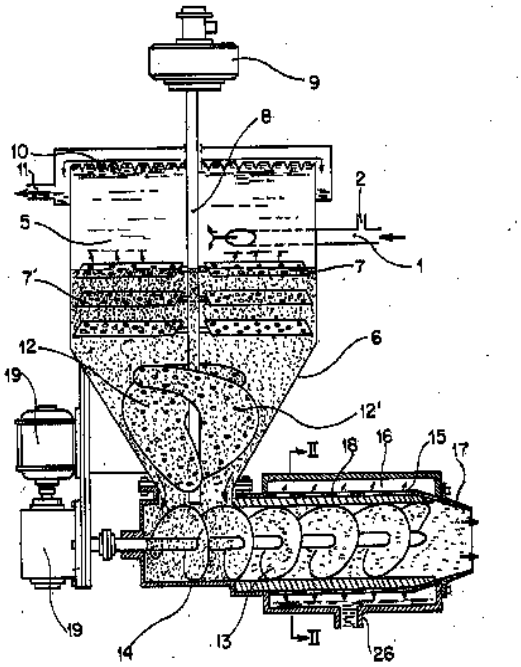

FIG. 1

B30B 9/128

{Vertical or inclined screw presses}

Definition statement

This place covers:

Illustrative example of subject matter classified in this group:

DE-U-202009004407

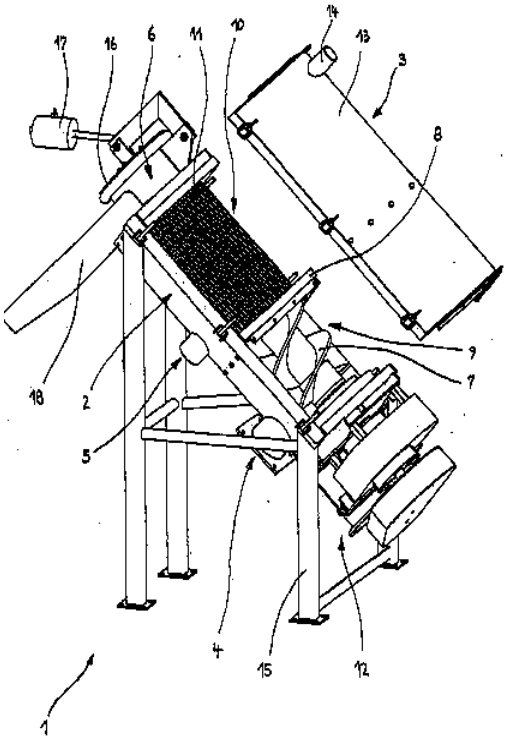

B30B 9/16

operating with two or more screws or worms

Definition statement

This place covers:

Illustrative example of subject matter classified in this group:

DE-A-1627975

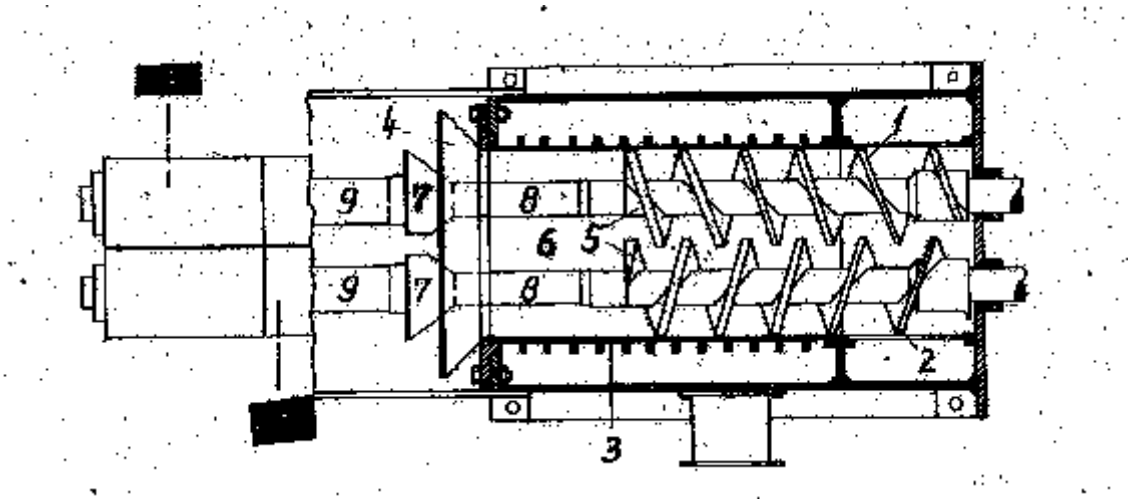

B30B 9/163

{working in different chambers}

Definition statement

This place covers:

Illustrative example of subject matter classified in this group:

US-A-4253390

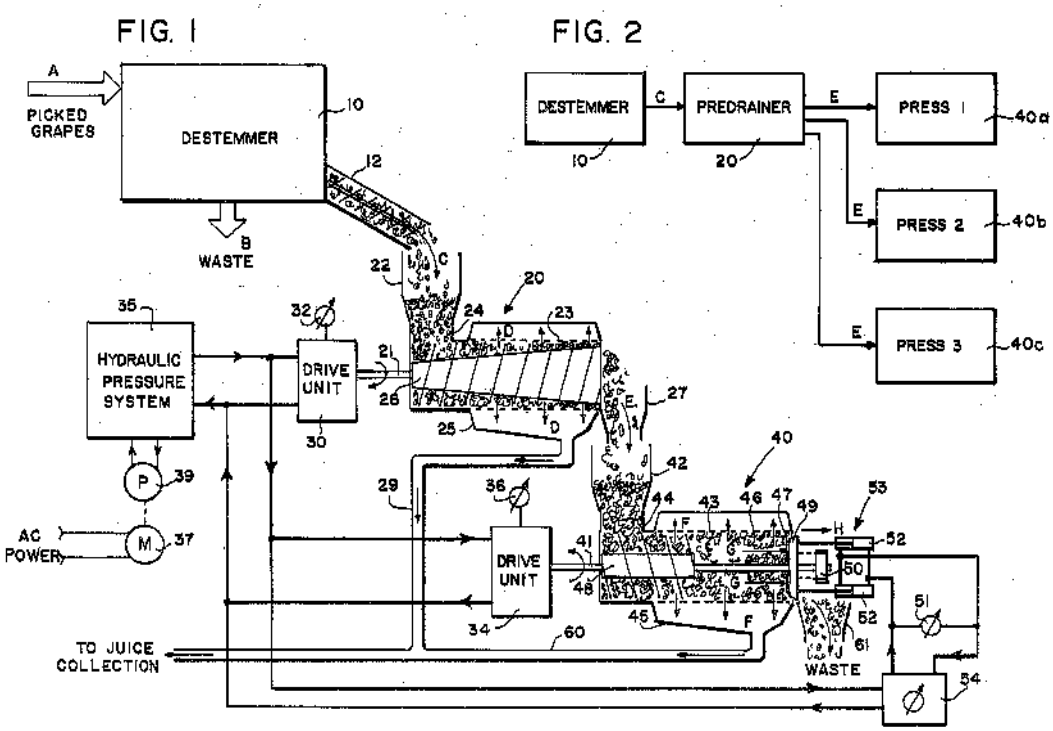

B30B 9/166

{the screws being coaxially disposed in the same chamber}

Definition statement

This place covers:

Illustrative example of subject matter classified in this group:

FR2388769

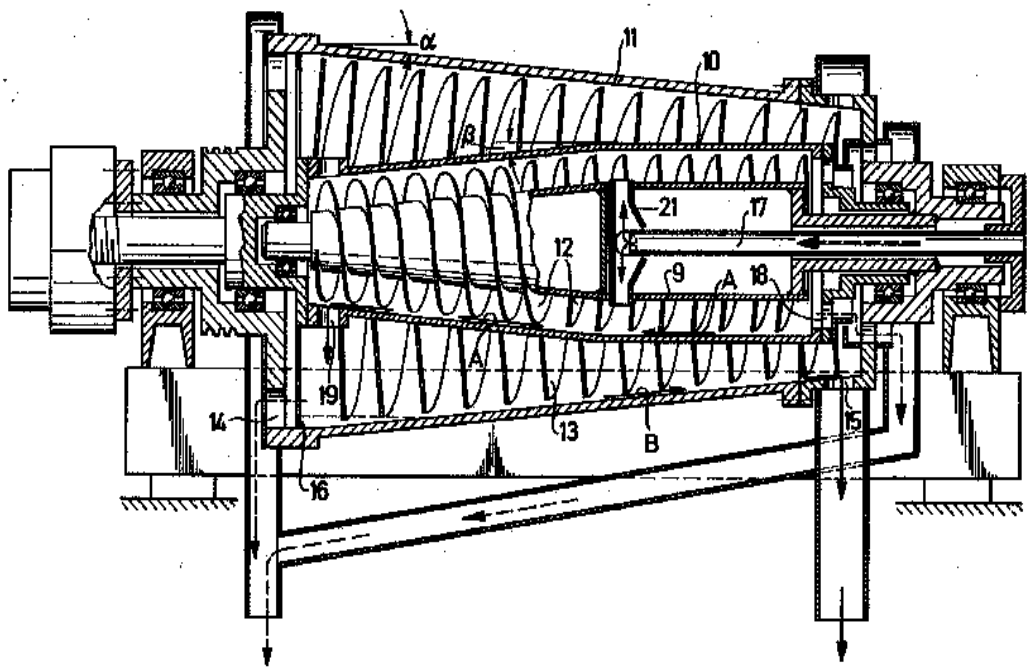

DE-A-3429848

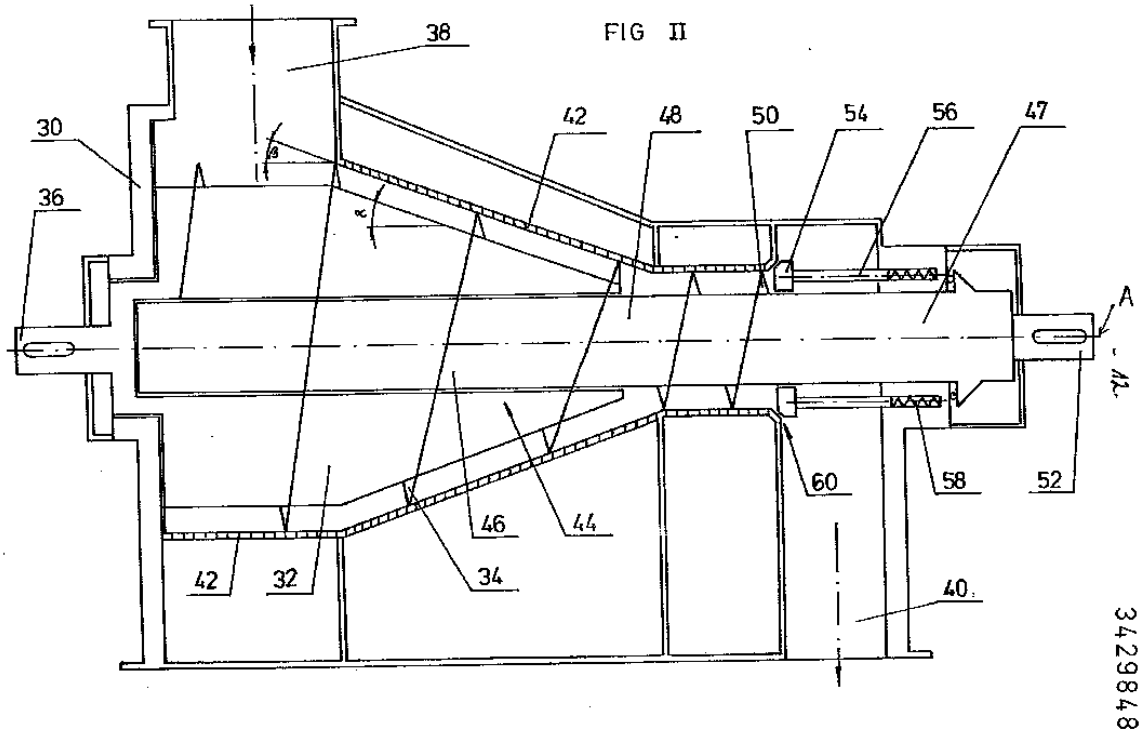

B30B 9/18

with means for adjusting the outlet for the solid

Definition statement

This place covers:

Illustrative example of subject matter classified in this group:

FR-A-2269605

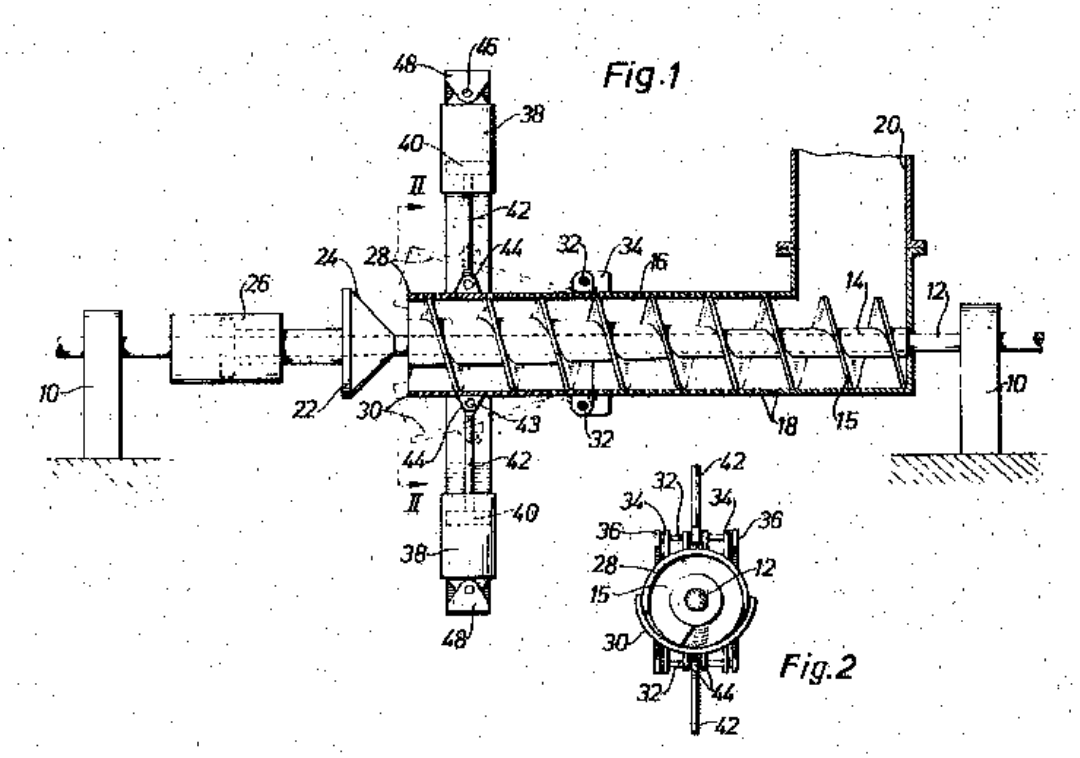

B30B 9/20

using rotary pressing members, other than worms or screws, e.g. rollers, rings, discs

Definition statement

This place covers:

Illustrative example of subject matter classified in this group:

WO-A-9426388

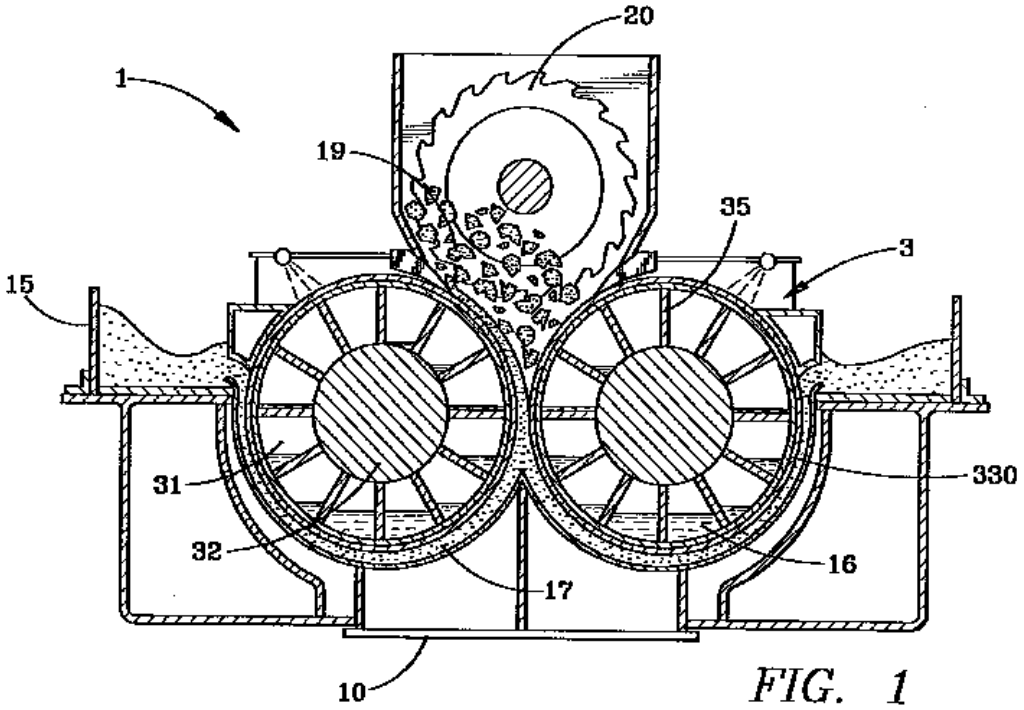

FIG. 1

Special rules of classification

The use is classified in this group. Details that are relevant for rolls in general are classified in B30B 3/00.

B30B 9/202

{with co-operating cones}

Definition statement

This place covers:

Illustrative example of subject matter classified in this group:

FR-A-2117413

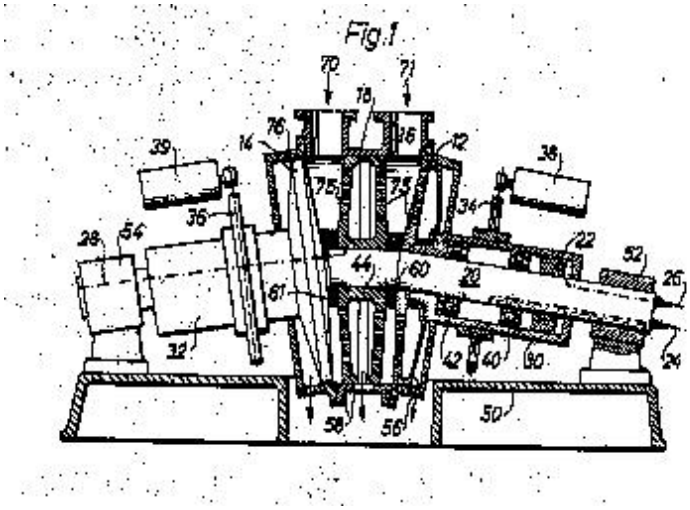

US-A-4321140

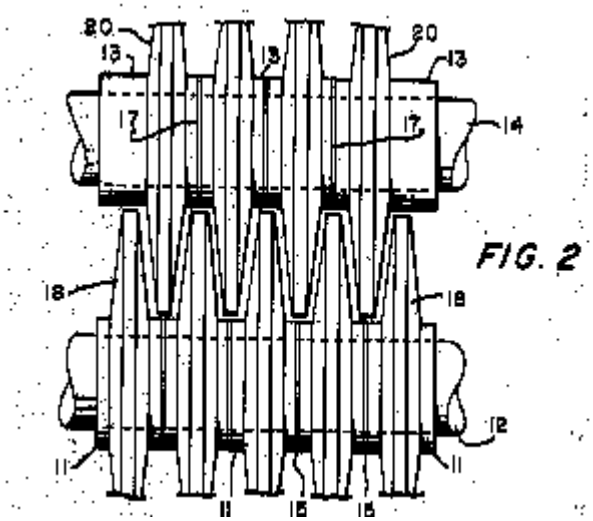

B30B 9/205

{using a roller with radially arranged vanes dividing the pressing space in separate chambers}

Definition statement

This place covers:

Illustrative example of subject matter classified in this group:

FR-A-2582573

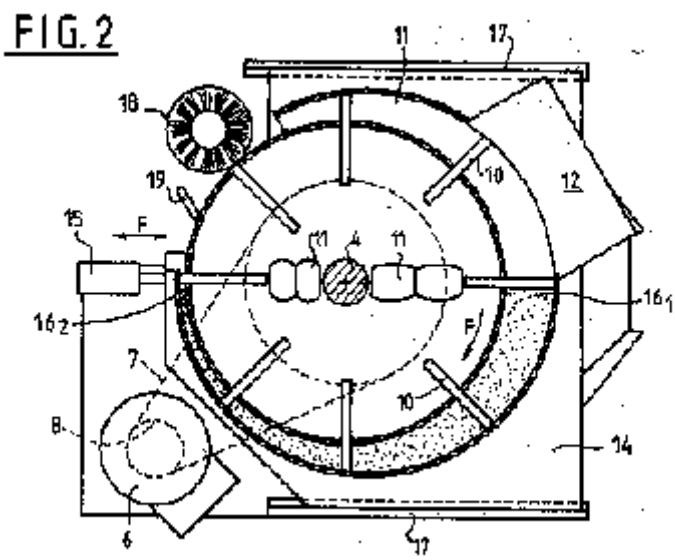

B30B 9/207

{Roller-and-ring presses}

Definition statement

This place covers:

Illustrative example of subject matter classified in this group:

US-A-4683816

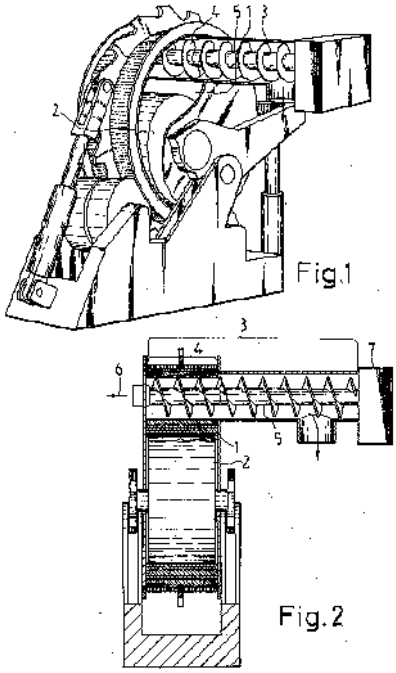

B30B 9/22

using a flexible member, e.g. diaphragm, urged by fluid pressure

Definition statement

This place covers:

Illustrative example of subject matter classified in this group:

US-A-5451415

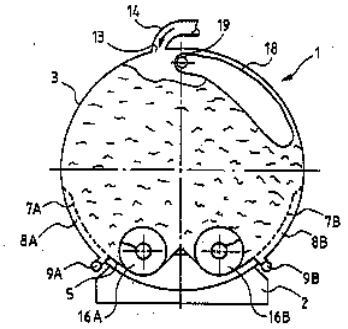

Fig.3

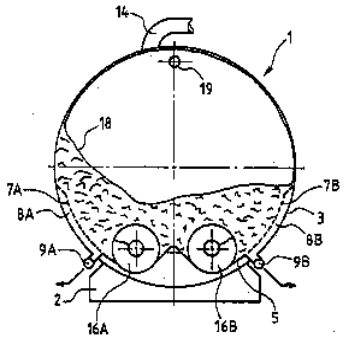

Fig.4

B30B 9/225

{the diaphragm being tubular}

Definition statement

This place covers:

Illustrative example of subject matter classified in this group:

FR-A-2379309

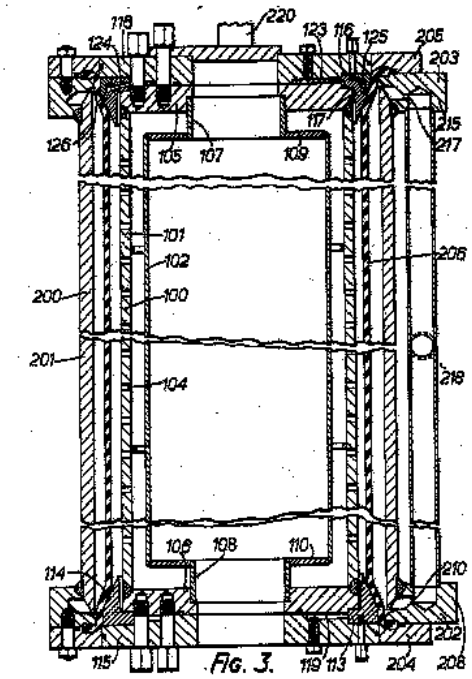

FIG. 3.

B30B 9/24

using an endless pressing band

Definition statement

This place covers:

Illustrative example of subject matter classified in this group:

US-A-5203996

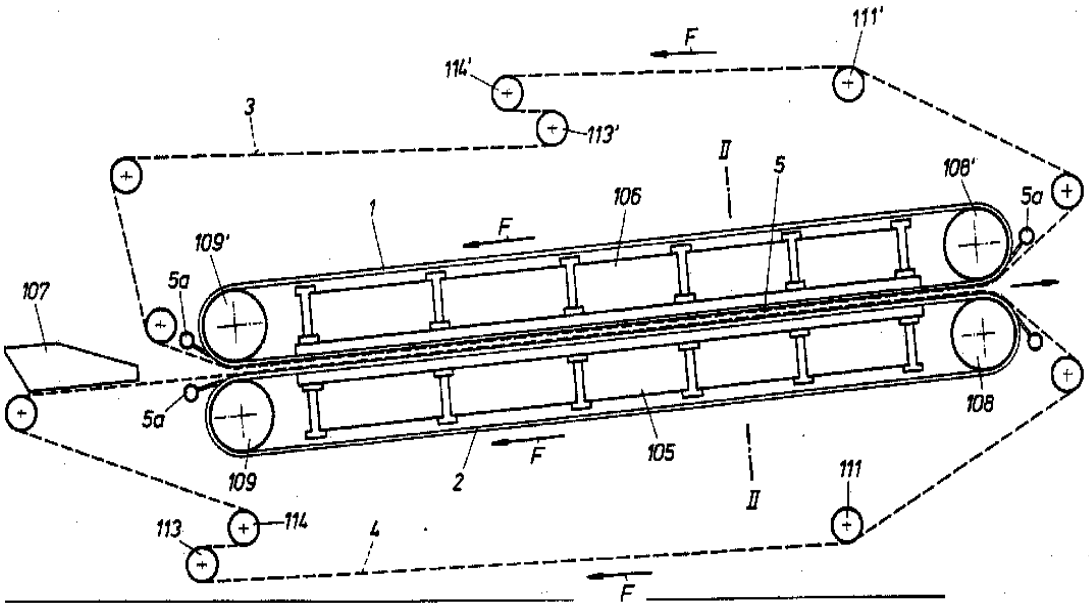

US-A-7314141

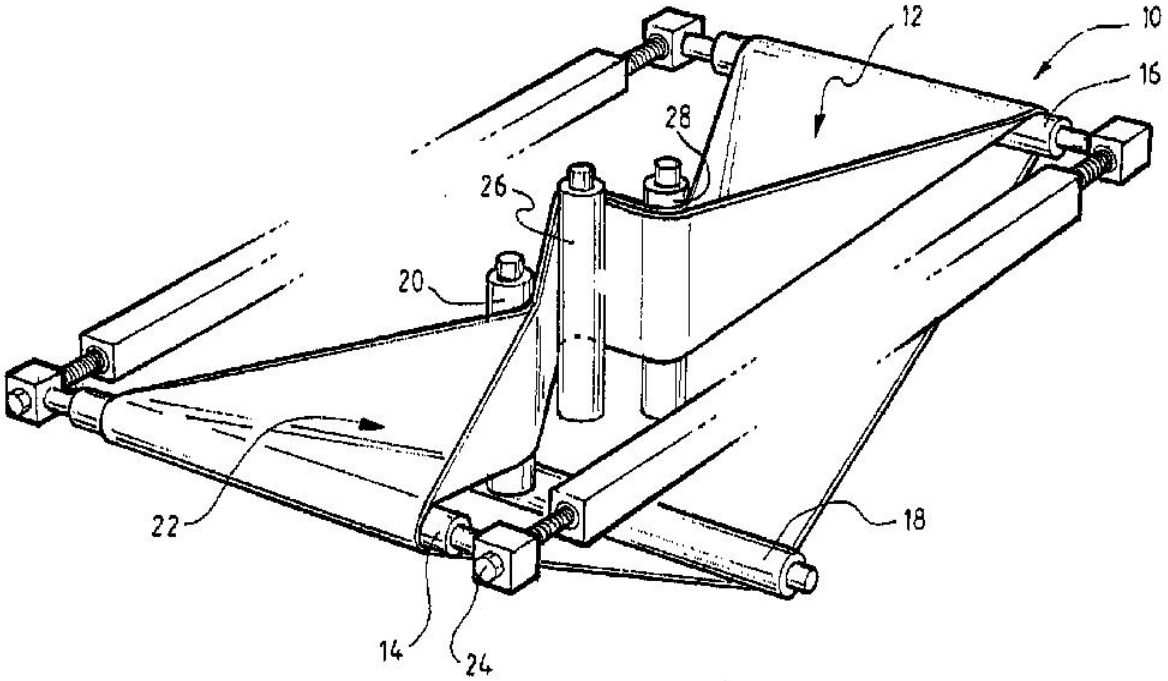

FIG 1

B30B 9/241

{co-operating with a drum or roller}

Definition statement

This place covers:

Illustrative example of subject matter classified in this group:

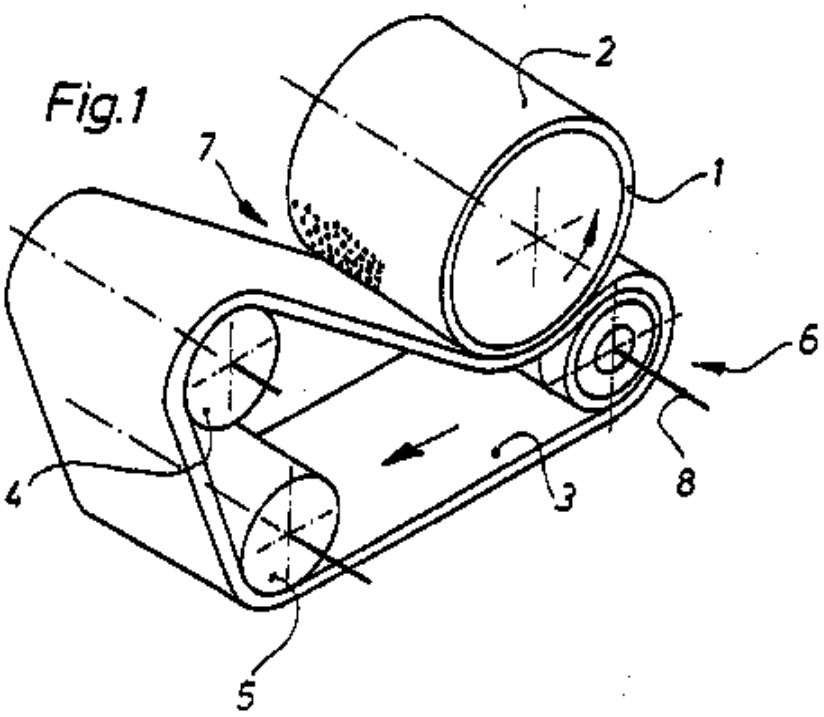

DE-U-9306718

B30B 9/242

{comprising compartments which are recurrently constricted and expanded}

Definition statement

This place covers:

Illustrative example of subject matter classified in this group:

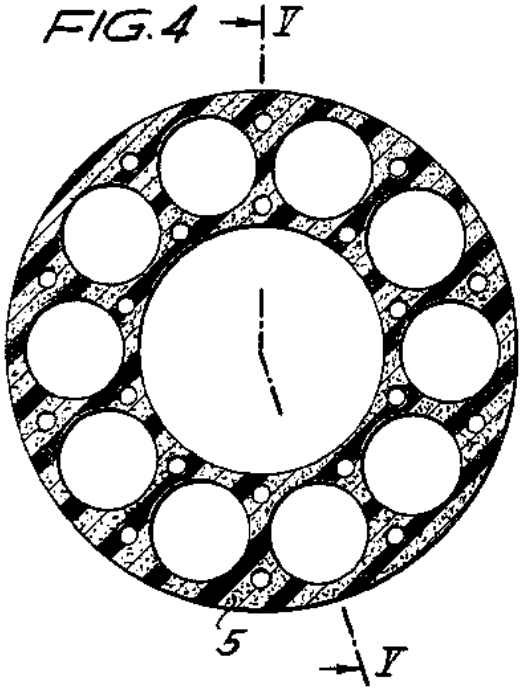

US-A-3631794

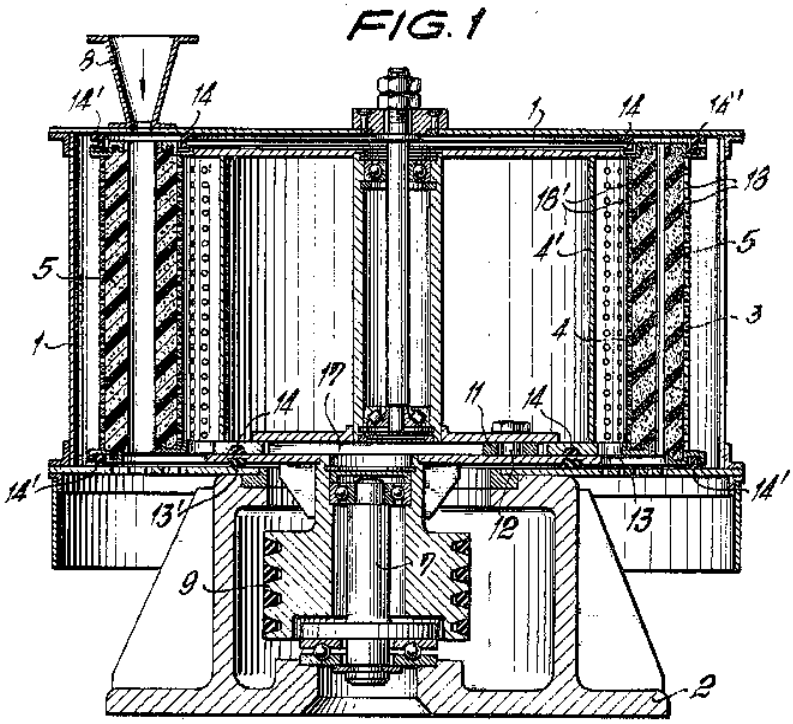

B30B 9/243

{The squeezing-out being performed in several stages}

Definition statement

This place covers:

Illustrative example of subject matter classified in this group:

US-A-4181616

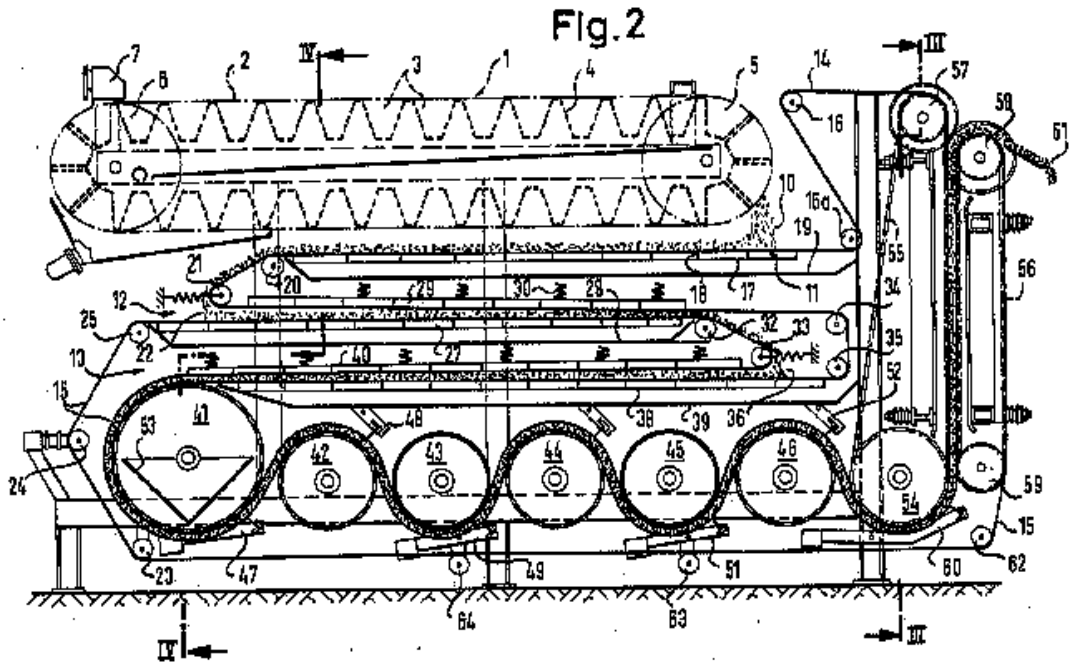

B30B 9/245

{the edges of the band being folded over the material}

Definition statement

This place covers:

Illustrative example of subject matter classified in this group:

US-A-3805692

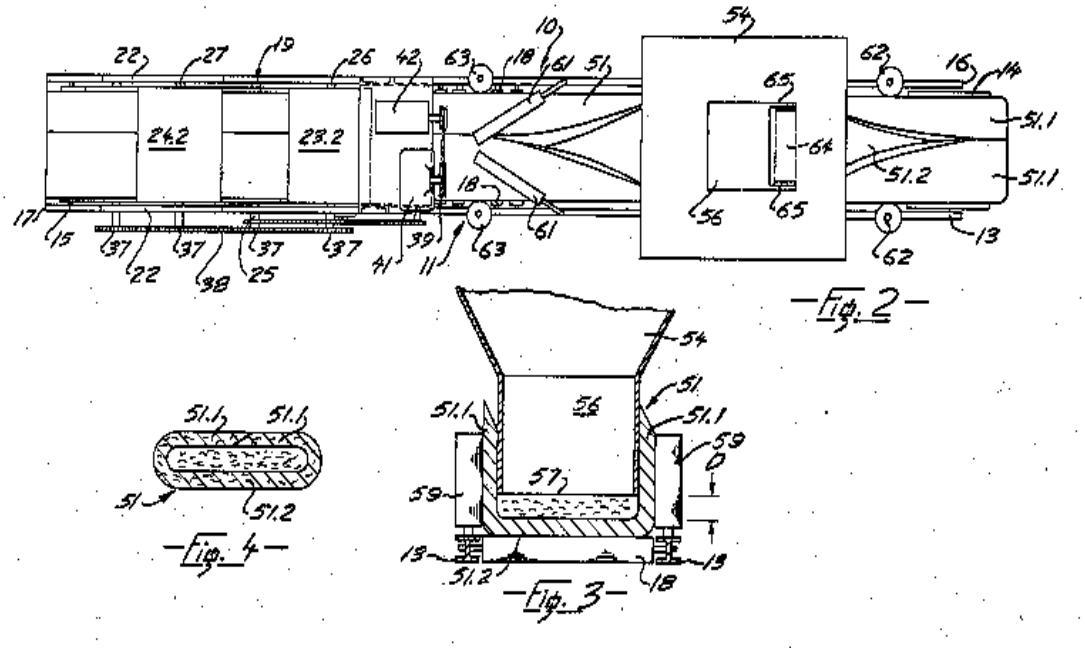

B30B 9/246

{The material being conveyed around a drum between pressing bands}

Definition statement

This place covers:

Illustrative example of subject matter classified in this group:

EP-A-0283870

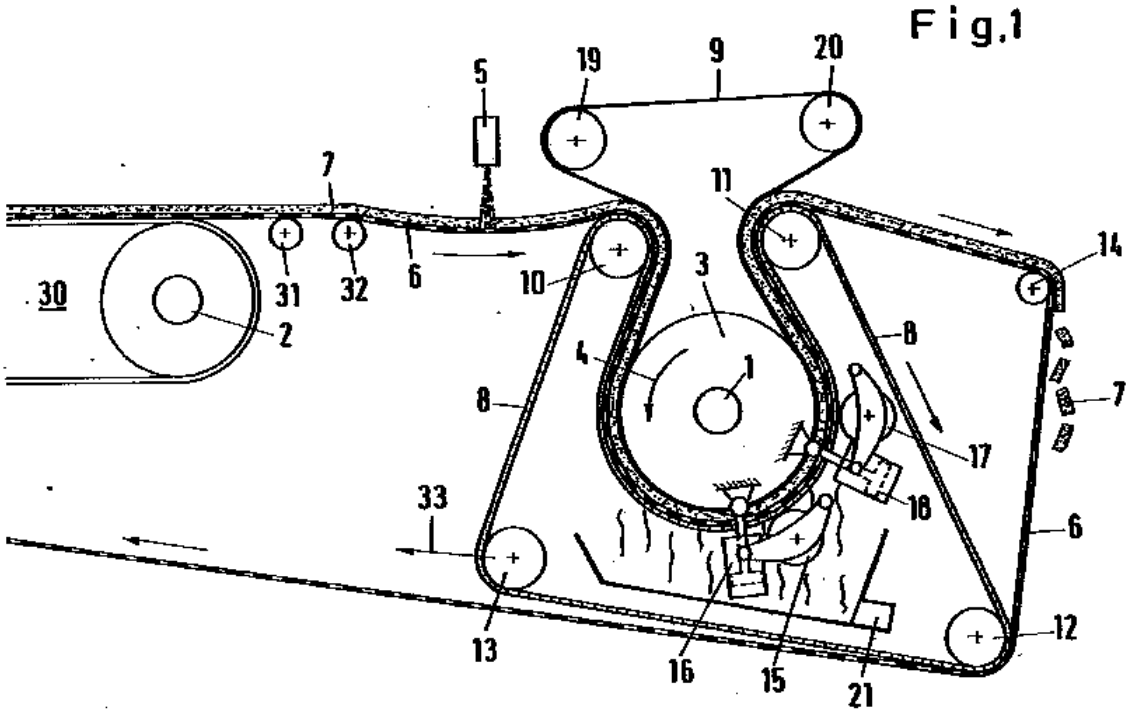

B30B 9/247

{Pressing band constructions}

Definition statement

This place covers:

Illustrative example of subject matter classified in this group:

GB-A-2004763

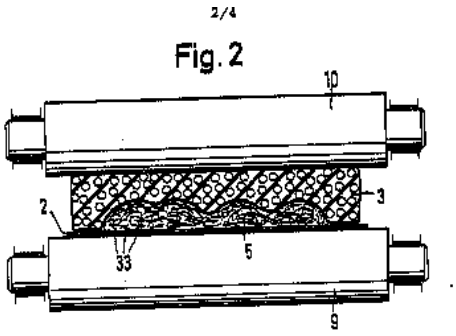

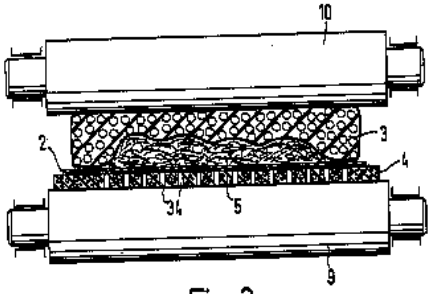

Fig. 3

B30B 9/248

{Means for sealing the press zone}

Definition statement

This place covers:

Illustrative example of subject matter classified in this group:

US-A-5545333

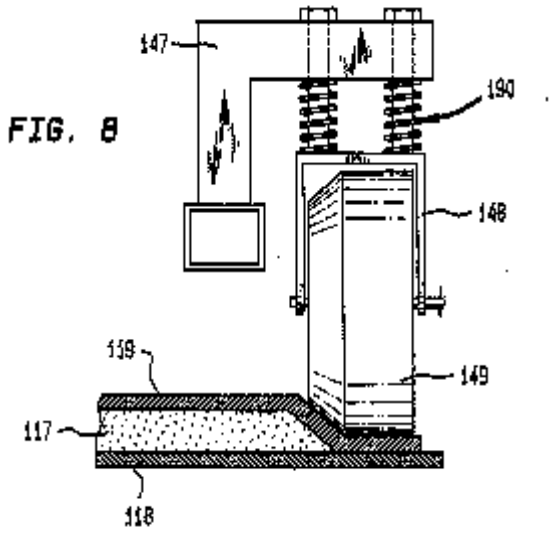

B30B 9/26

Permeable casings or strainers

Definition statement

This place covers:

Illustrative example of subject matter classified in this group:

US-A-5351612

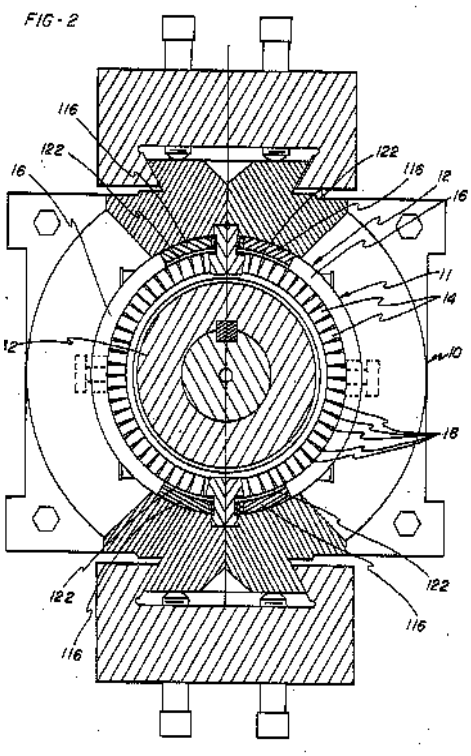

B30B 9/262

{means disposed in the casing facilitating the squeezing-out of liquid}

Definition statement

This place covers:

Illustrative example of subject matter classified in this group:

DE-A-3332310

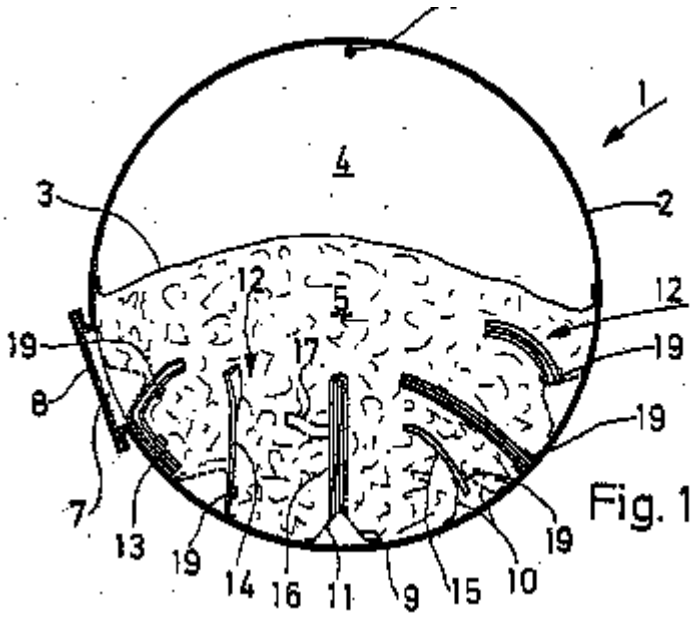

Fig. 1

B30B 9/265

{Press cloths}

Definition statement

This place covers:

Illustrative example of subject matter classified in this group:

DE-A-3802037

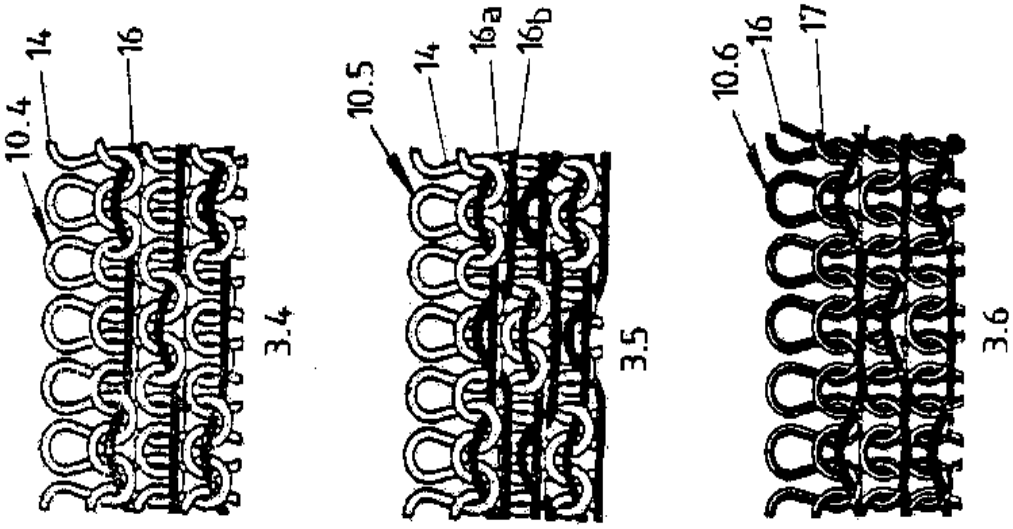

B30B 9/267

{Strainer bars; Spacers}

Definition statement

This place covers:

Illustrative example of subject matter classified in this group:

US-A-4289065

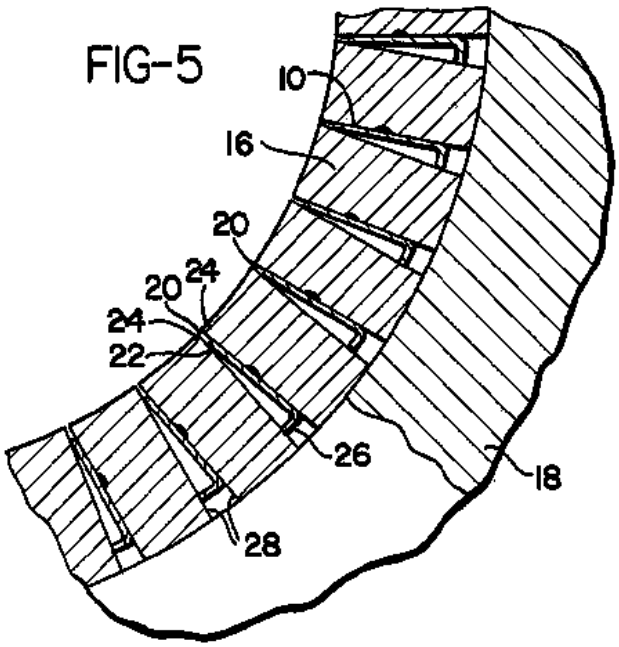

B30B 9/28

for forming shaped articles (from material in powder, granular, or paste form, e.g. briquetting presses B30B 11/00)

Definition statement

This place covers:

Illustrative example of subject matter classified in this group:

US-A-3704665

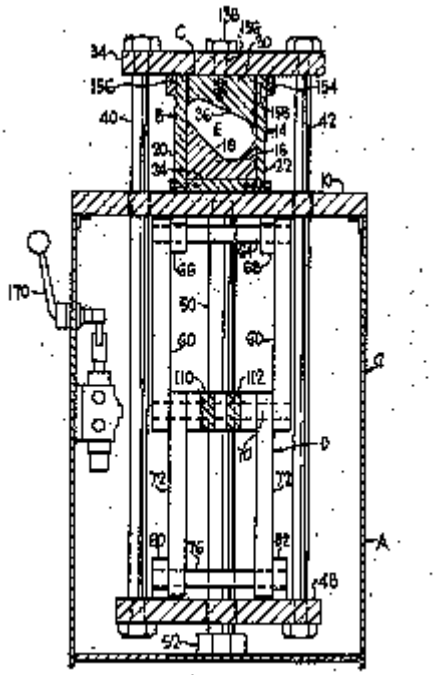

FIG. 3

B30B 9/30

for baling; Compression boxes therefor (baling hay, straw, or the like A01F)

Definition statement

This place covers:

Illustrative example of subject matter classified in this group:

DE-A-3238642

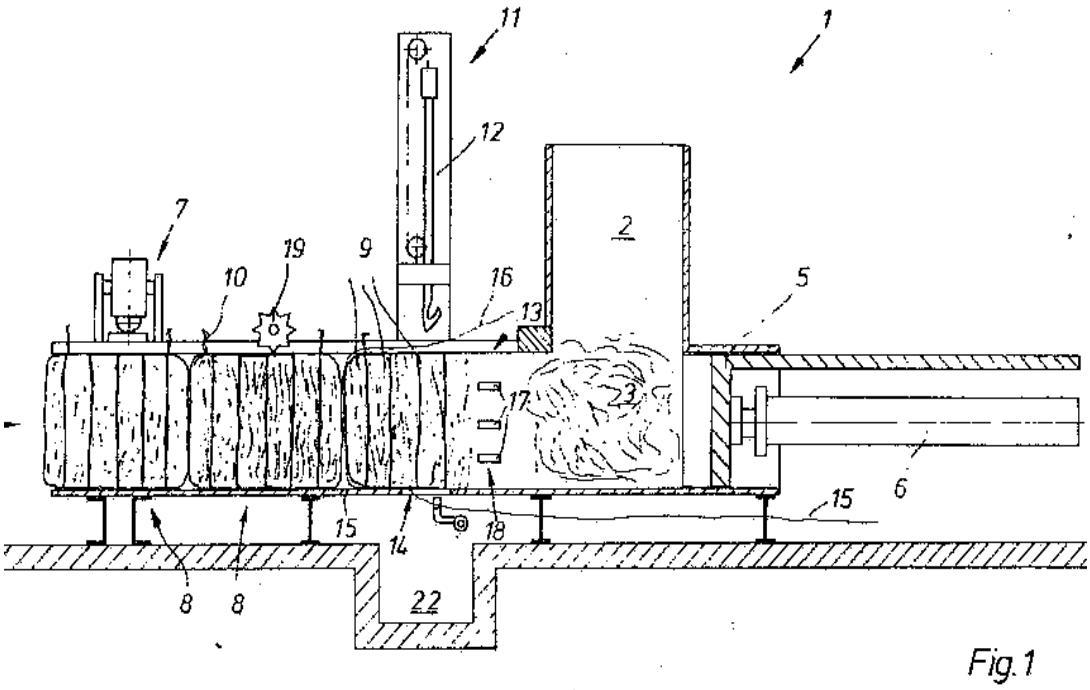

Fig. 1

References

Informative references

Attention is drawn to the following places, which may be of interest for search:

Miscellaneous auxiliary devices operating on articles or materials to be packaged and not otherwise provided for - for compressing or compacting articles or materials prior to wrapping or insertion in containers or receptacles	B65B 63/02
Refuse receptacles Other constructional features Compressing means incorporated in, or specially adapted for, refuse receptacles	B65F 1/1405
Vehicles particularly adapted for collecting refuse with devices for charging, distributing or compressing refuse in the interior of the tank of a refuse vehicle with charging pistons, plates, or the like	B65F 3/20

B30B 9/3003

{Details}

Definition statement

This place covers:

Illustrative example of subject matter classified in this group:

DE-U-20119524

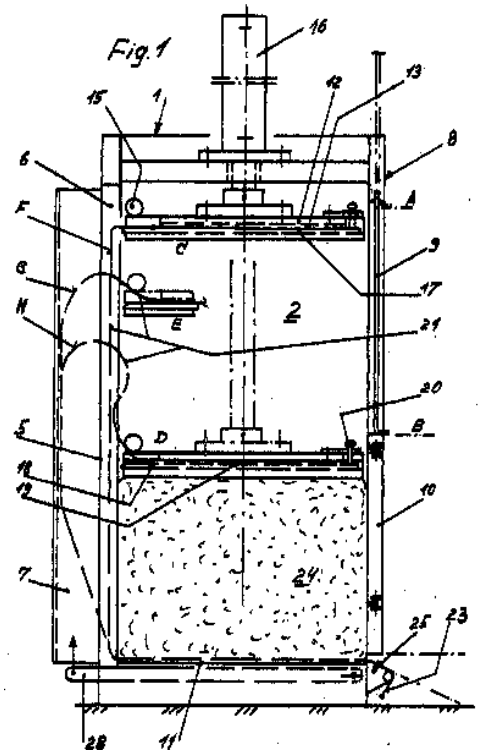

References

Informative references

Attention is drawn to the following places, which may be of interest for search:

Bundling particular articles presenting special problems using string, wire, or narrow tape or band; Baling fibrous material, e.g. peat, not otherwise provided for Baling or bundling compressible fibrous material, e.g. peat	B65B 27/12

Special rules of classification

This group is for the details not specifically mentioned in the hierarchical lower groups.

B30B 9/3007

{Control arrangements}

Definition statement

This place covers:

Illustrative example of subject matter classified in this group:

US-A-2010071572

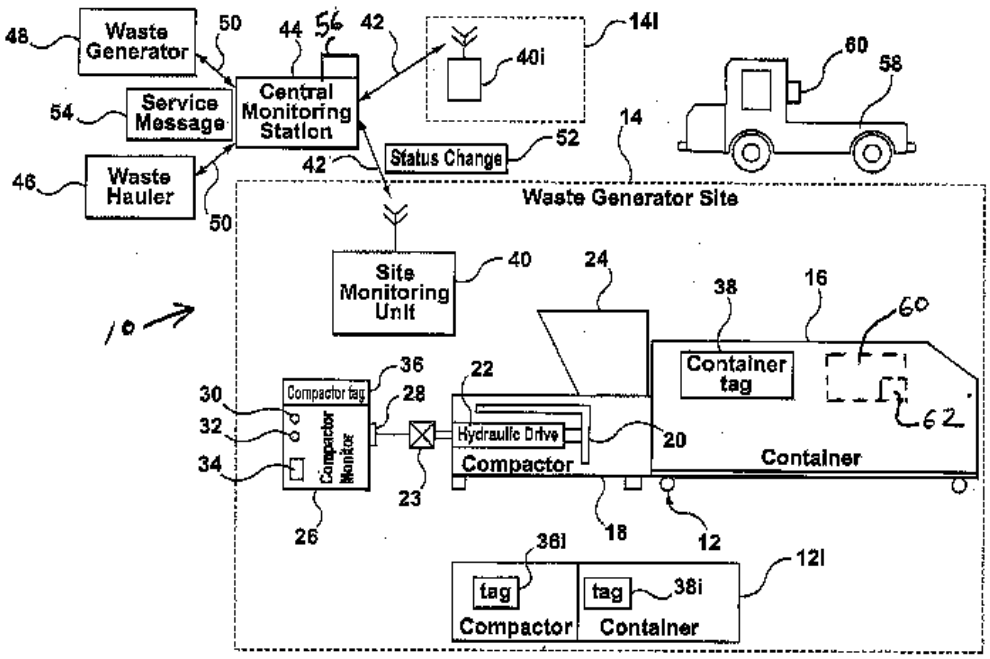

FIG. 1

B30B 9/301

{Feed means}

Definition statement

This place covers:

Illustrative example of subject matter classified in this group:

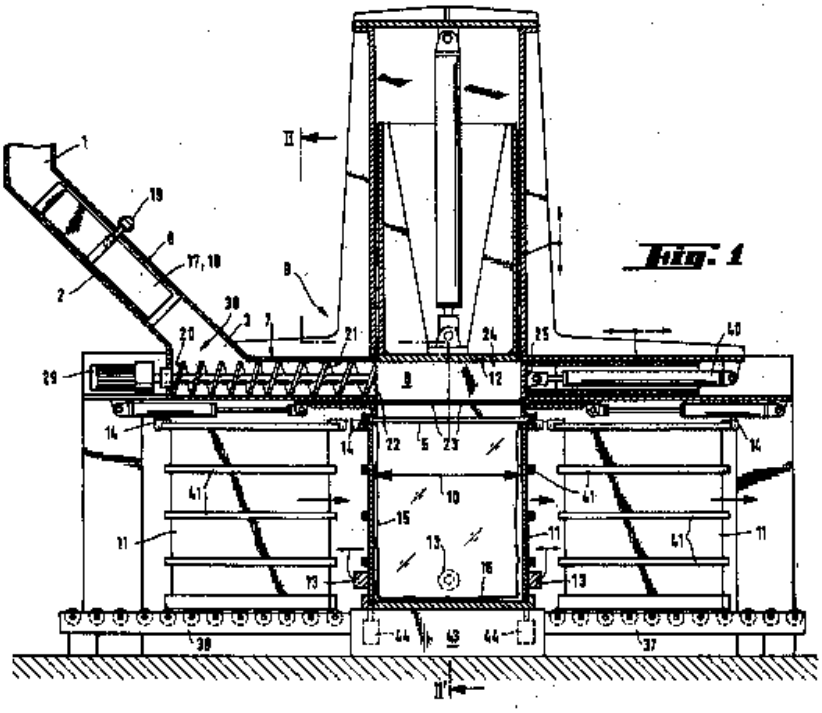

EP-A-0388911

Special rules of classification

This group is directed to the means for loading loose material in the baler.

B30B 9/3014

{Ejection means}

Definition statement

This place covers:

Illustrative example of subject matter classified in this group:

DE-A-102007013382

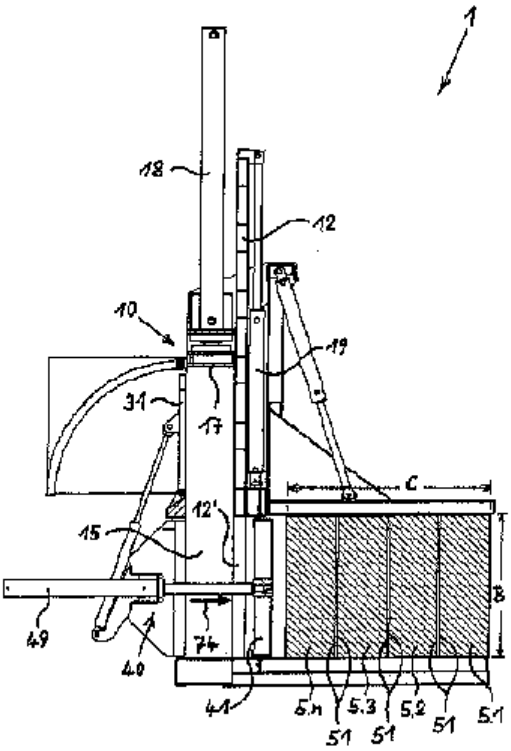

Special rules of classification

The ejection means should be part of the baling installation.

B30B 9/3017

{Odor eliminating means}

Definition statement

This place covers:

Illustrative example of subject matter classified in this group:

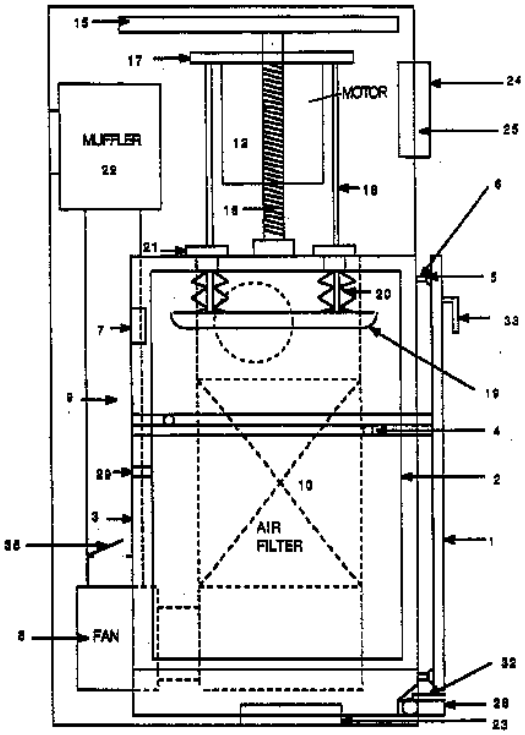

US-A-5389346

Special rules of classification

The means should be integrated in the baling installation.

B30B 9/3021

{Press rams}

Definition statement

This place covers:

Illustrative example of subject matter classified in this group:

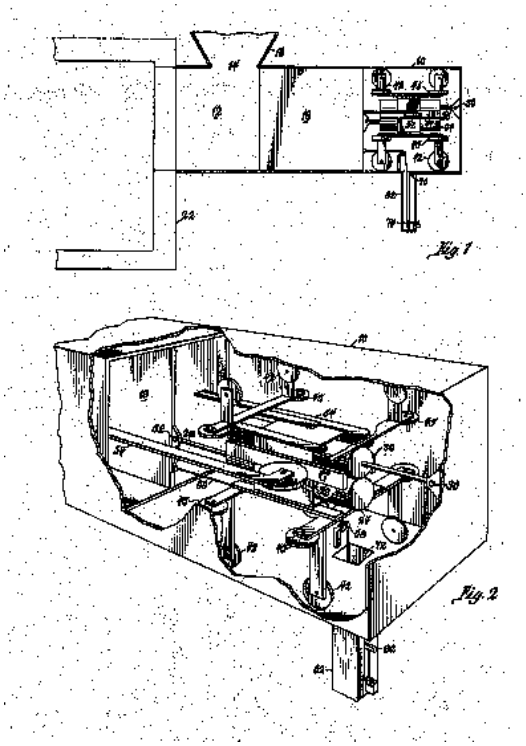

US-A-3863779

B30B 9/3025

{Extrusion chambers with adjustable outlet opening}

Definition statement

This place covers:

Illustrative example of subject matter classified in this group:

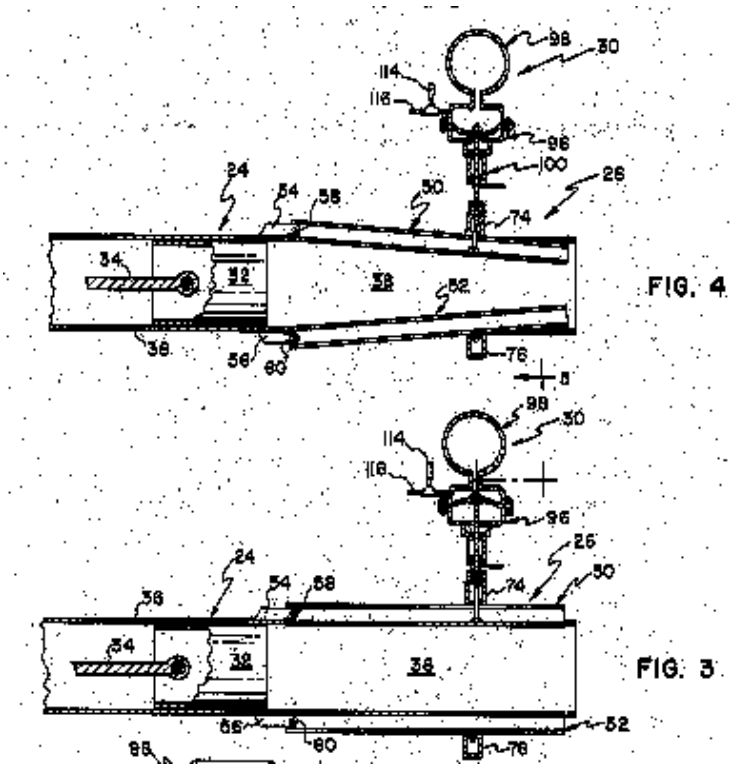

US-A-3866529

B30B 9/3028

{Retaining dogs}

Definition statement

This place covers:

Holding or gripping elements which are located in the wall of the pressing chamber to retain the compressed material.

Illustrative example of subject matter classified in this group:

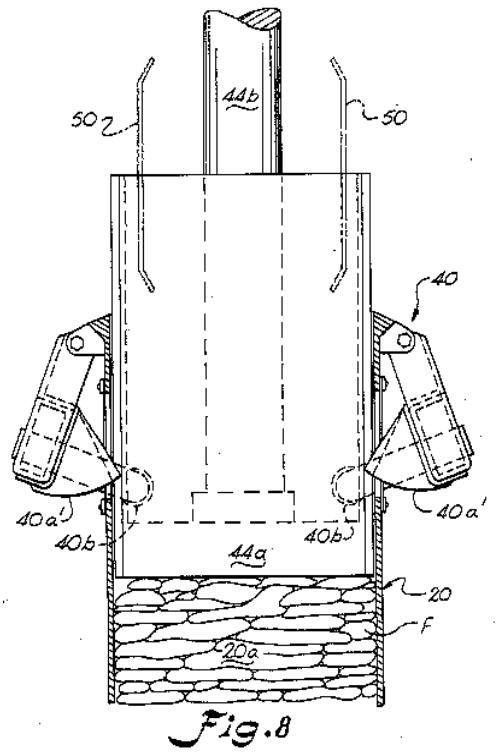

US-A-5493963

B30B 9/3032

{Press boxes}

Definition statement

This place covers:

Illustrative example of subject matter classified in this group:

DE-U-9408578

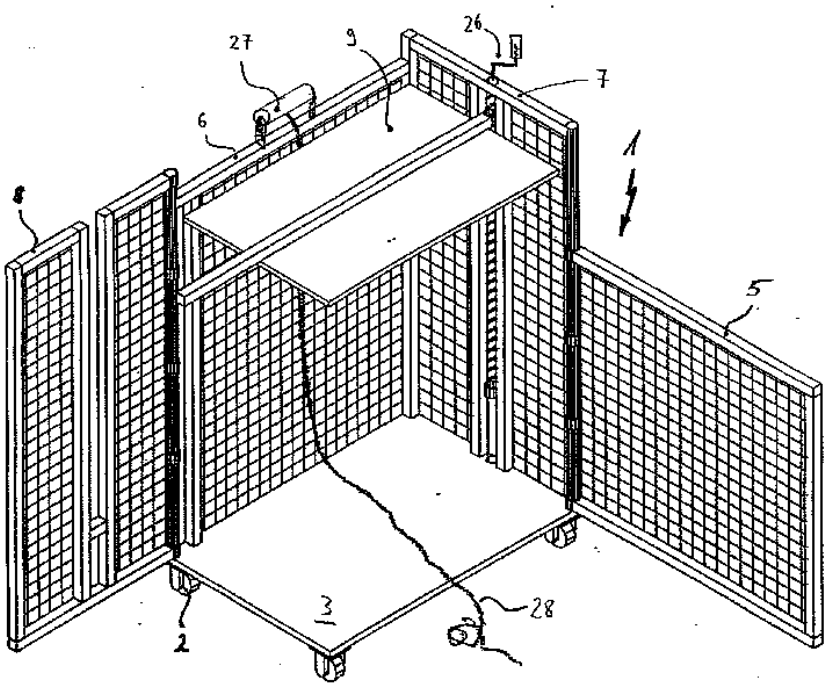

Fig. 2

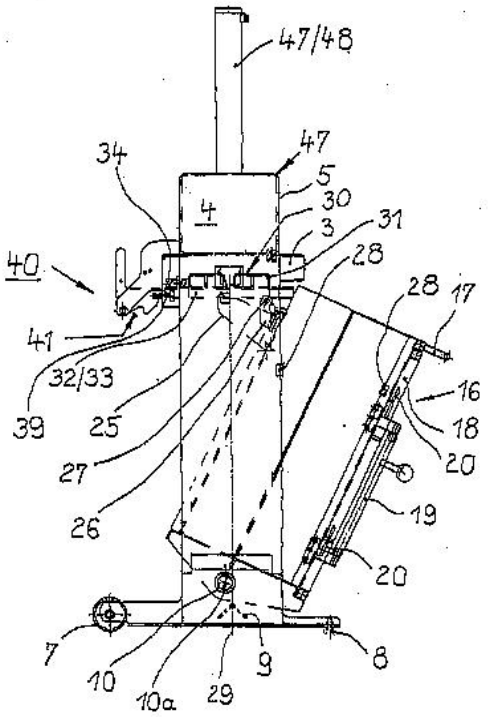

WO-A-0063004

B30B 9/3035

{Means for conditioning the material to be pressed, e.g. paper shredding means}

Definition statement

This place covers:

Illustrative example of subject matter classified in this group:

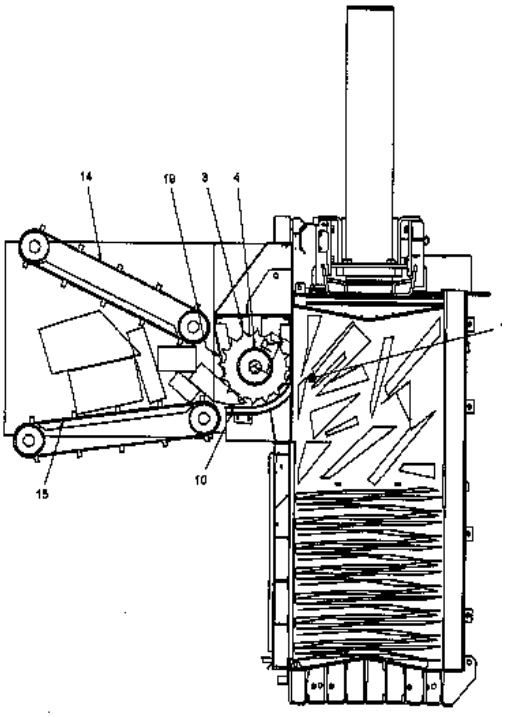

DE-U-202007004201

B30B 9/3039

{Fluid removing means}

Definition statement

This place covers:

Illustrative example of subject matter classified in this group:

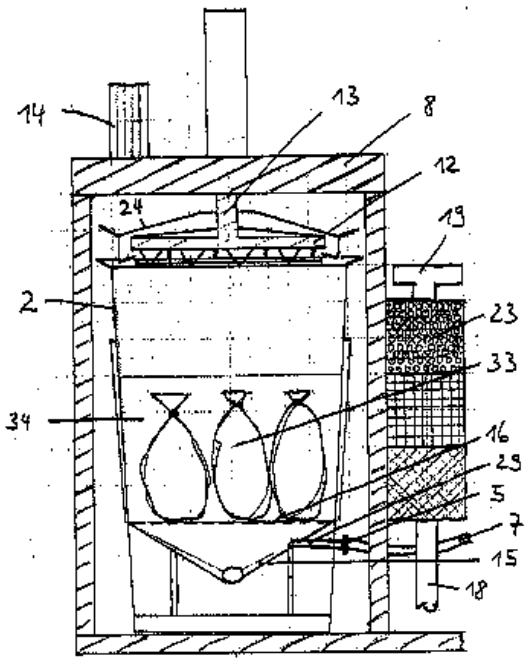

DE-A-10250053

B30B 9/3042

{Containers provided with, or connectable to, compactor means}

Definition statement

This place covers:

Illustrative example of subject matter classified in this group:

FR-A-2572370

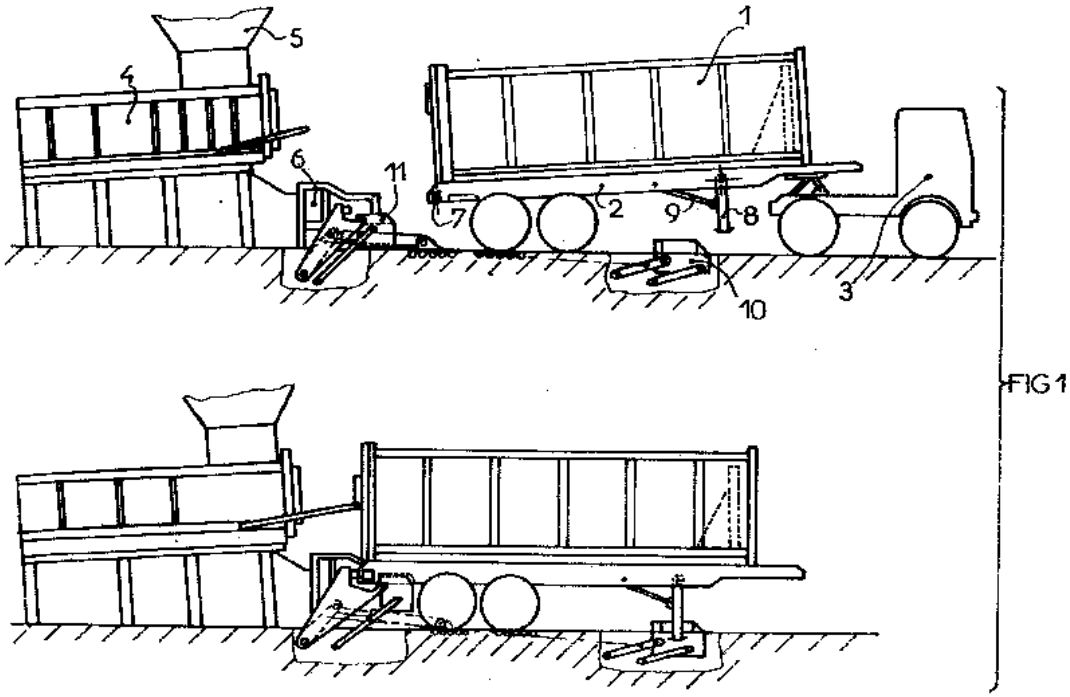

B30B 9/3046

{Containers with built-in compactor means}

Definition statement

This place covers:

Illustrative example of subject matter classified in this group:

GB-A-2058654

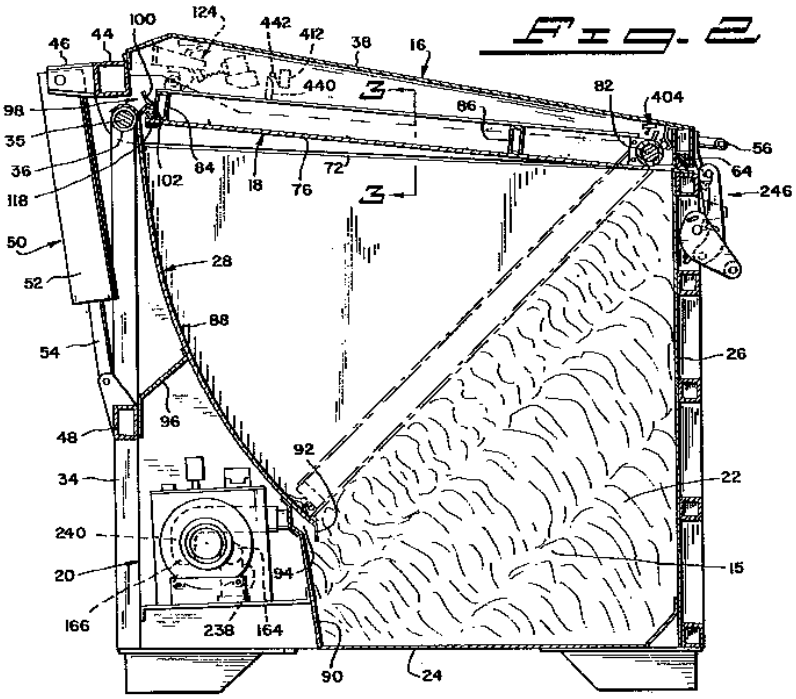
Fig. 2
46
44
100
124
442
412
38
16
98
35
36
118
50
52
54
48
34
240
20
166
238
164
90
24
94
92
96
88
28
102
84
18
76
72
440
86
82
404
56
64
246
26
22
15

B30B 9/305

{Drive arrangements for the press ram}

Definition statement

This place covers:

Illustrative example of subject matter classified in this group:

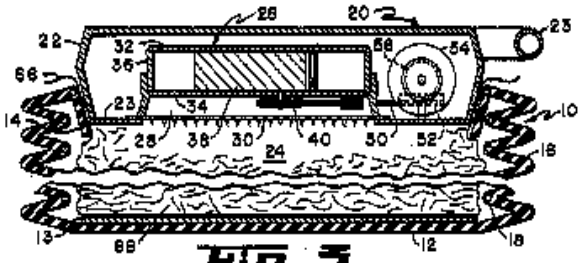

FIG 3

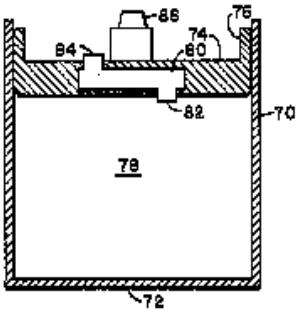

FIG 4

US-A-3899967

B30B 9/3053

{Hand- or foot-operated presses}

Definition statement

This place covers:

Illustrative example of subject matter classified in this group:

GB-A-2315404

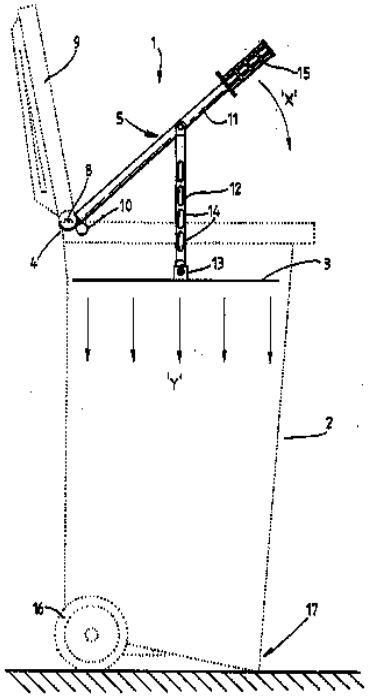

FIG . 2

B30B 9/3057

{Fluid-driven presses}

Definition statement

This place covers:

Illustrative example of subject matter classified in this group:

EP-A-0268709

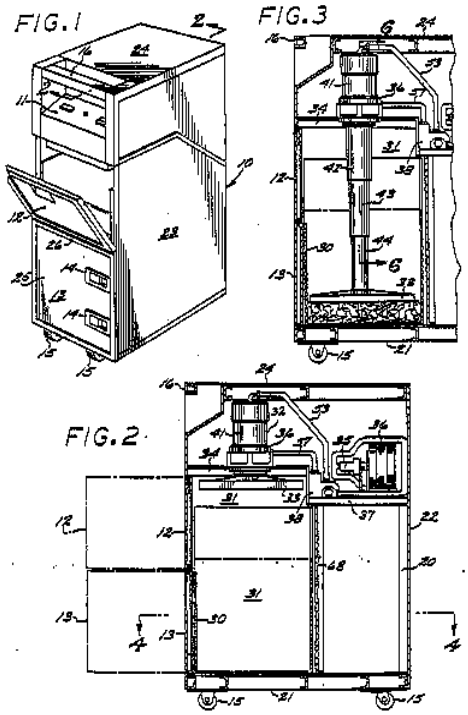

B30B 9/306

{Mechanically-driven presses}

Definition statement

This place covers:

Illustrative example of subject matter classified in this group:

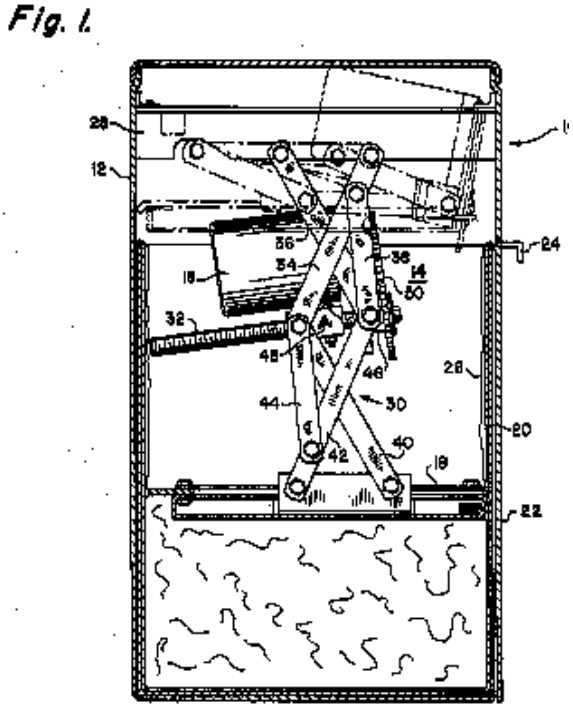

US-A-4100850

B30B 9/3064

{by screw means}

Definition statement

This place covers:

Illustrative example of subject matter classified in this group:

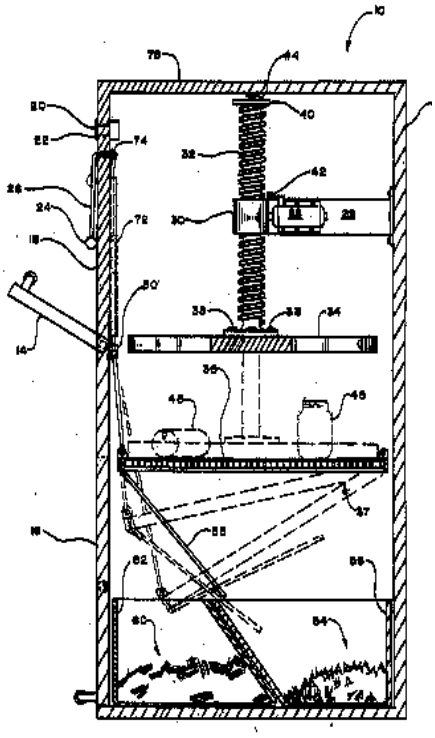

US-A-5221052

B30B 9/3067

{by rack-and-pinion means}

Definition statement

This place covers:

Illustrative example of subject matter classified in this group:

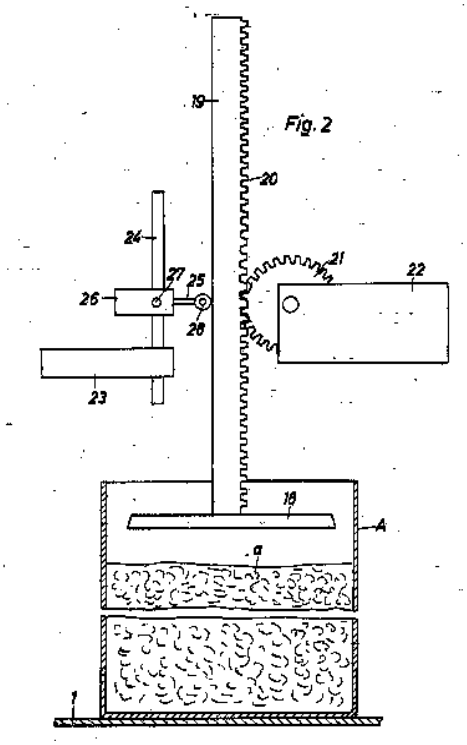

DE-A-1934279

B30B 9/3071

{by the pull of chains or ropes}

Definition statement

This place covers:

Illustrative example of subject matter classified in this group:

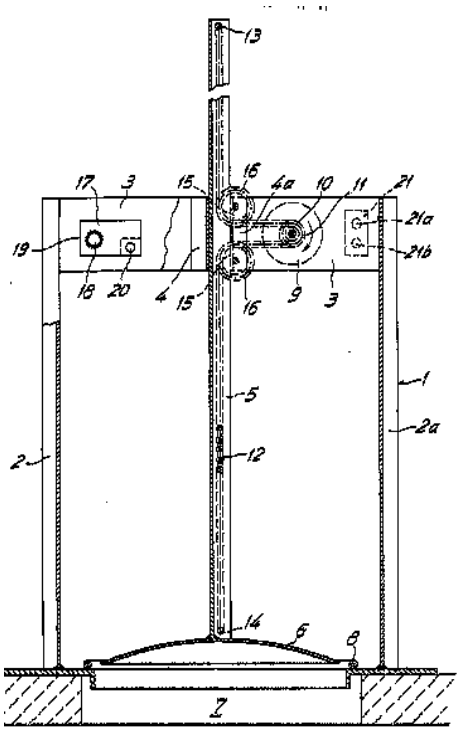

DE-U-8025186

B30B 9/3075

{with press boxes on a movable carrier, e.g. turntable}

Definition statement

This place covers:

Illustrative example of subject matter classified in this group:

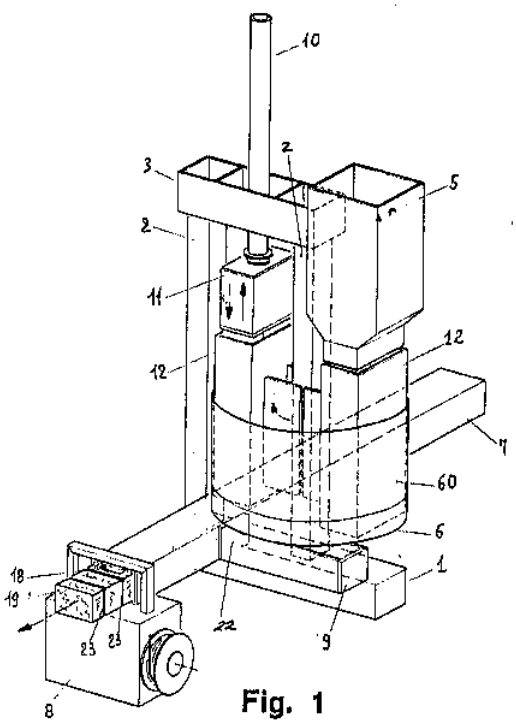

Fig. 1

EP-A-0574362

B30B 9/3078

{with precompression means}

Definition statement

This place covers:

Illustrative example of subject matter classified in this group:

WO-A-2007028558

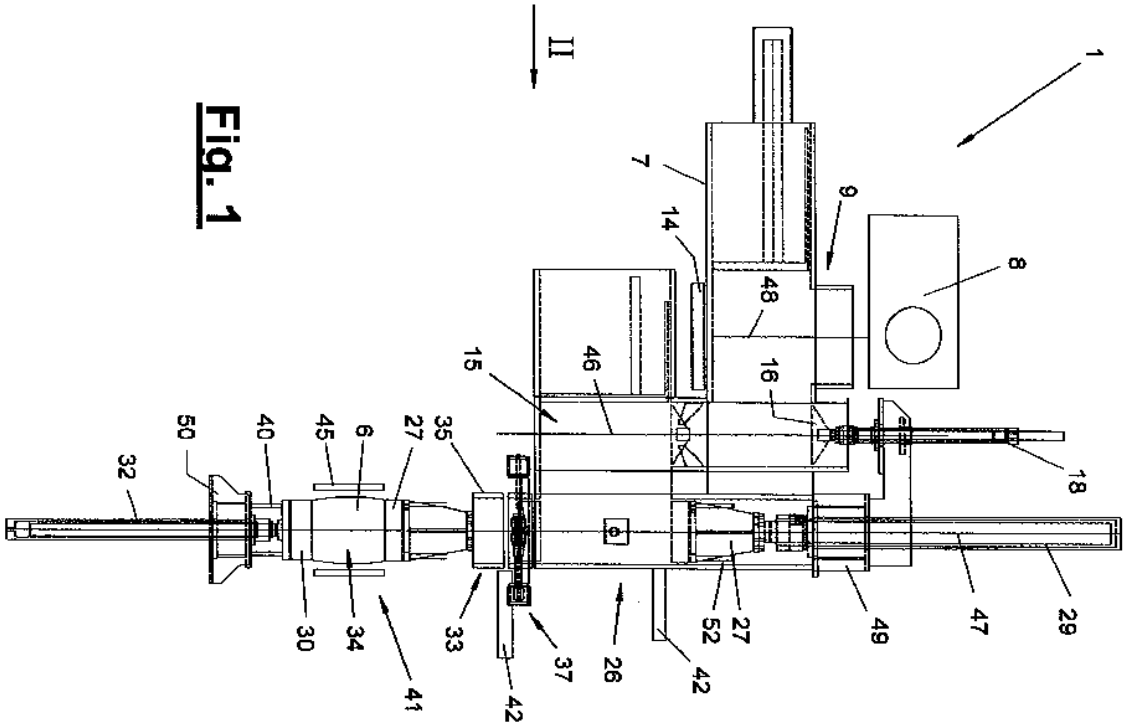

Fig. 1

B30B 9/3082

{with compression means other than rams performing a rectilinear movement}

Definition statement

This place covers:

Illustrative example of subject matter classified in this group:

EP-A-2110229

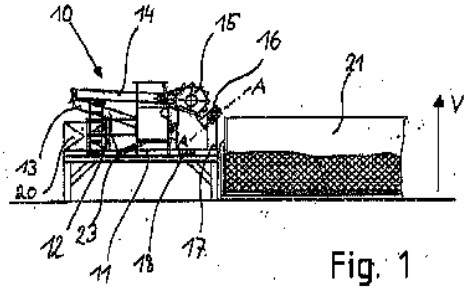

Fig. 1

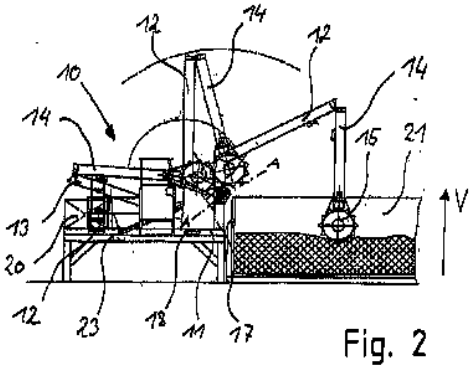

Fig. 2

B30B 9/3085

{using a stationary press ram co-operating with a movable press box}

Definition statement

This place covers:

Illustrative example of subject matter classified in this group:

DE-U-20207348

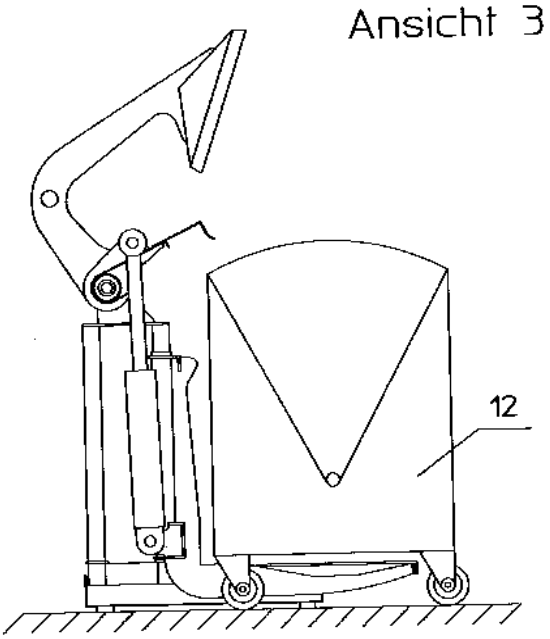

B30B 9/3089

{Extrusion presses}

Definition statement

This place covers:

Illustrative example of subject matter classified in this group:

US-A-5611268

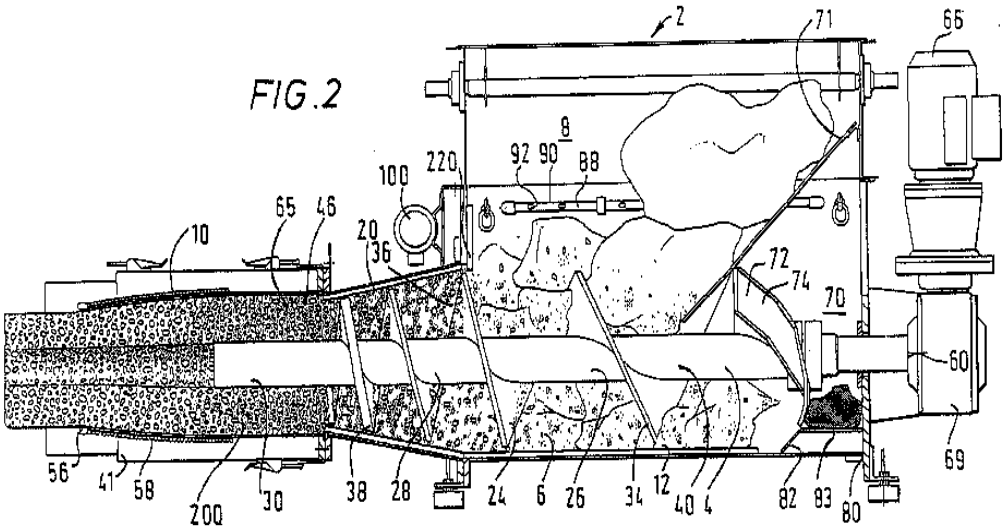

B30B 9/3092

{with two or more stationary press boxes co-operating alternately with a press ram or simultaneously with press rams}

Definition statement

This place covers:

Illustrative example of subject matter classified in this group:

DE-U-20108195

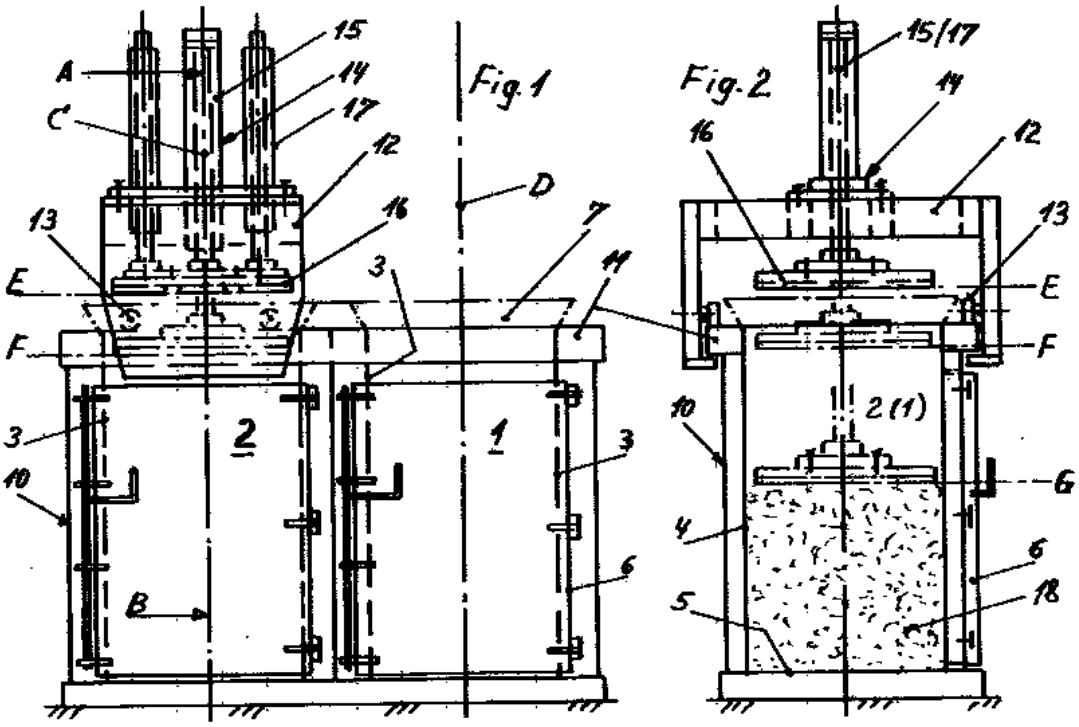

B30B 9/3096

{the means against which, or wherein, the material is compacted being retractable}

Definition statement

This place covers:

Illustrative example of subject matter classified in this group:

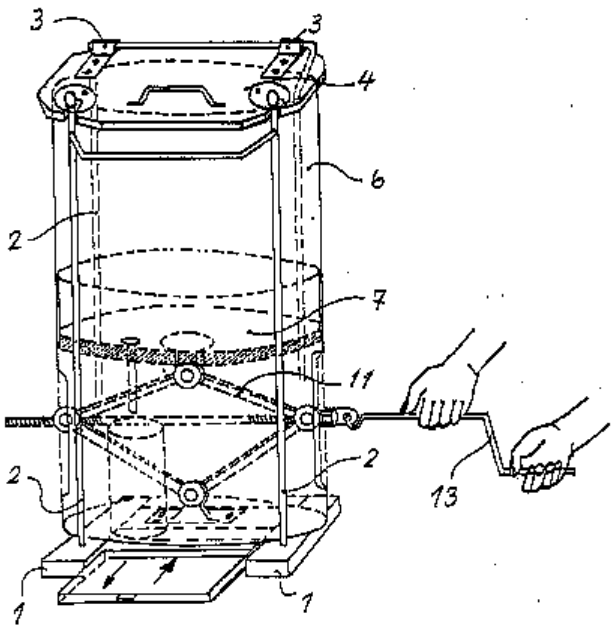

Fig 2

EP-A-1775112

B30B 9/32

for consolidating scrap metal or for compacting used cars

Definition statement

This place covers:

Illustrative example of subject matter classified in this group:

US-A-5655443

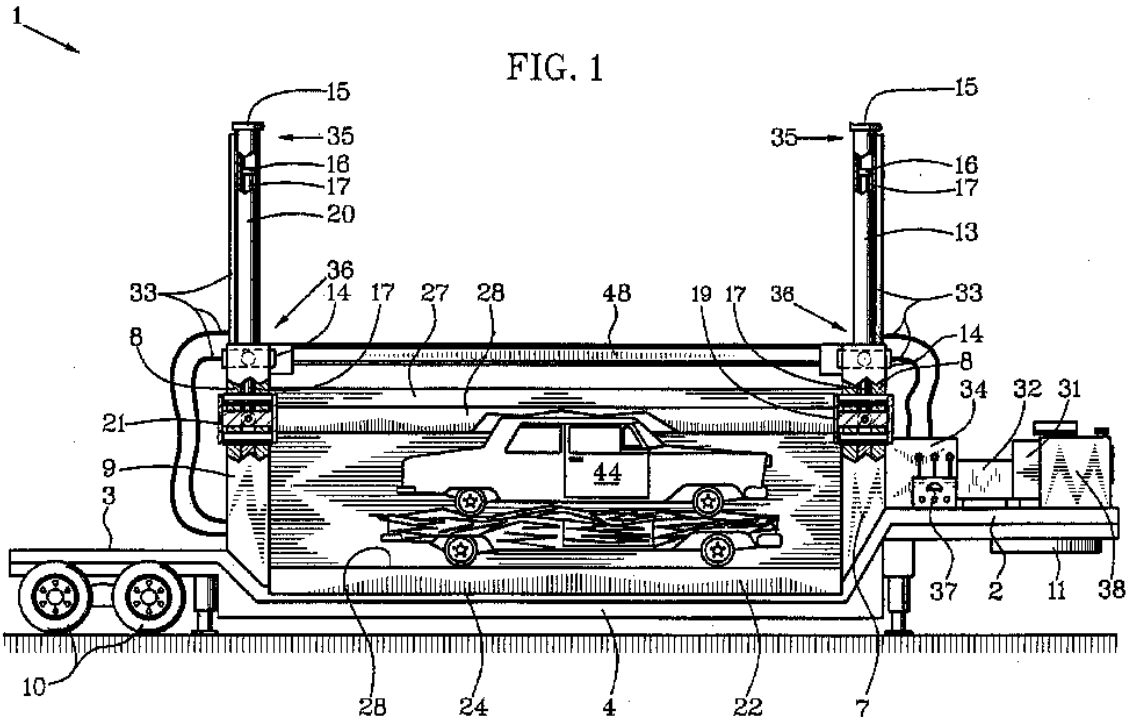

B30B 9/321

{for consolidating empty containers, e.g. cans}

Definition statement

This place covers:

Apparatus for consolidating metal, plastic and/or cardboard containers.

Illustrative example of subject matter classified in this group:

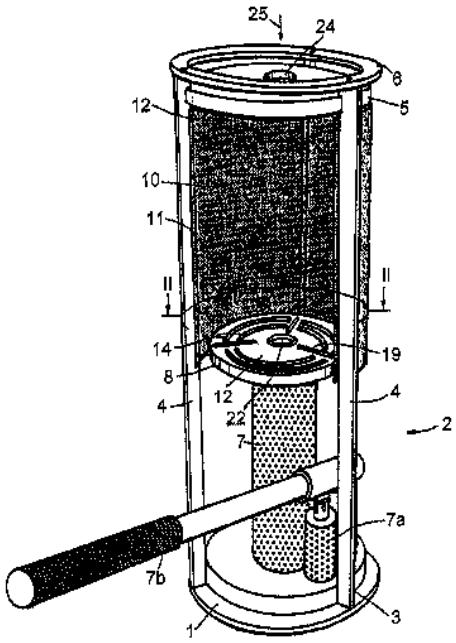

Fig. 1

DE-A-19705136

References

Informative references

Attention is drawn to the following places, which may be of interest for search:

Recovery of plastics or other constituents of waste material containing plastics by agglomeration or compacting Compacting complete waste articles Hollow articles, e.g. bottles	B29B 17/0052
Refuse receptacles specially adapted for segregated refuse collecting, e.g. receptacles with several compartments; Combination of receptacles	B65F 1/0033
Mechanisms actuated by objects other than coins to free or to actuate vending, hiring, coin or paper currency dispensing or refunding apparatus by returnable containers i.e. reverse vending systems in which a user is rewarded for returning a container that serves as a token of value, e.g. bottles - by fluid containers, e.g. bottles, cups, gas containers	G07F 7/0609

B30B 9/322

{between jaws pivoting with respect to each other}

Definition statement

This place covers:

Illustrative example of subject matter classified in this group:

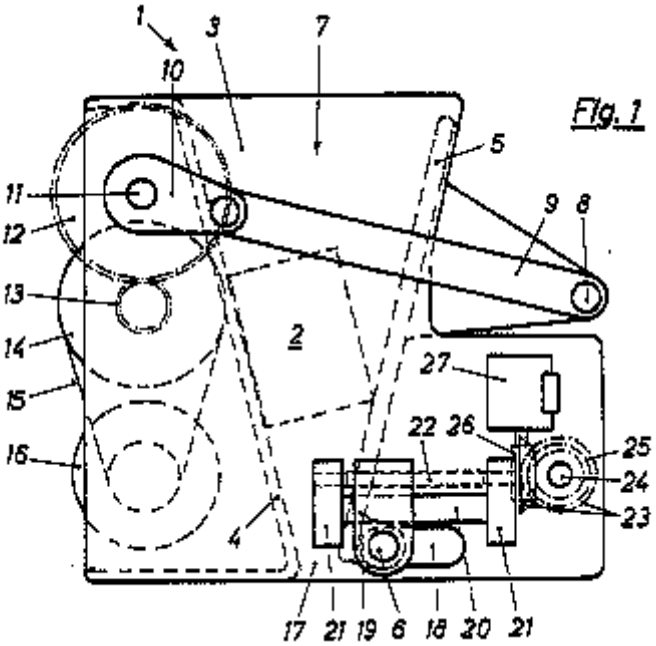

DE-A-19612815

B30B 9/323

{operated by hand or foot}

Definition statement

This place covers:

Illustrative example of subject matter classified in this group:

US-A-5158013

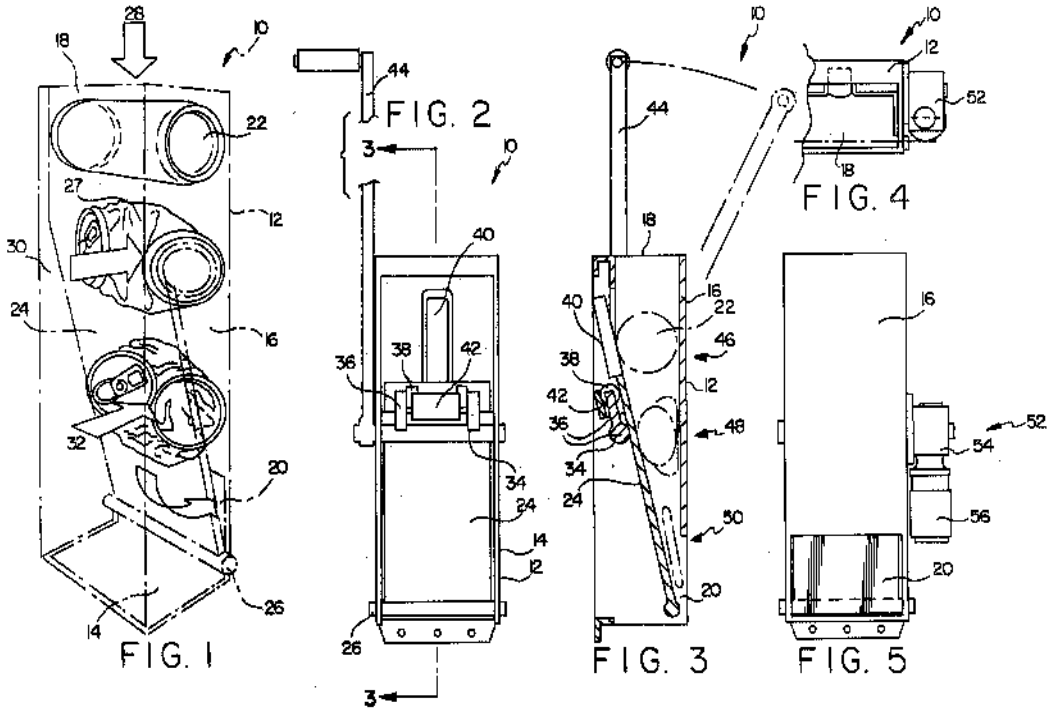

B30B 9/325

{between rotary pressing members, e.g. rollers, discs}

Definition statement

This place covers:

Illustrative example of subject matter classified in this group:

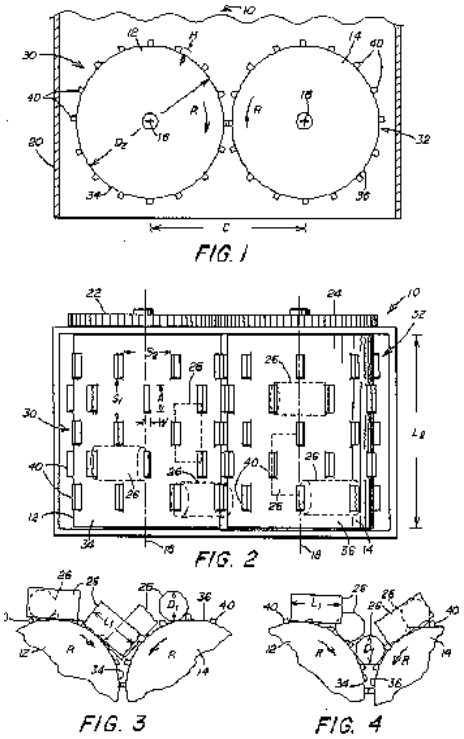

US-A-4862796

B30B 9/326

{provided with shearing means for the scrap metal, or adapted to co-operate with a shearing machine}

Definition statement

This place covers:

Illustrative example of subject matter classified in this group:

FR-A-2422499

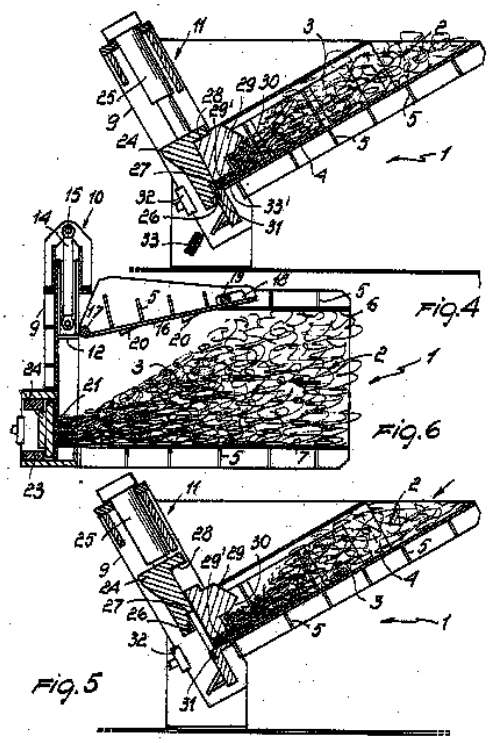

References

Informative references

Attention is drawn to the following places, which may be of interest for search:

Shearing machines or shearing devices covered by none or more than one of the groups B23D 15/00 - B23D 29/00 ; Combinations of shearing machines - Cutting-up scrap	B23D 31/008

B30B 9/327

{for briquetting scrap metal}

Definition statement

This place covers:

Illustrative example of subject matter classified in this group:

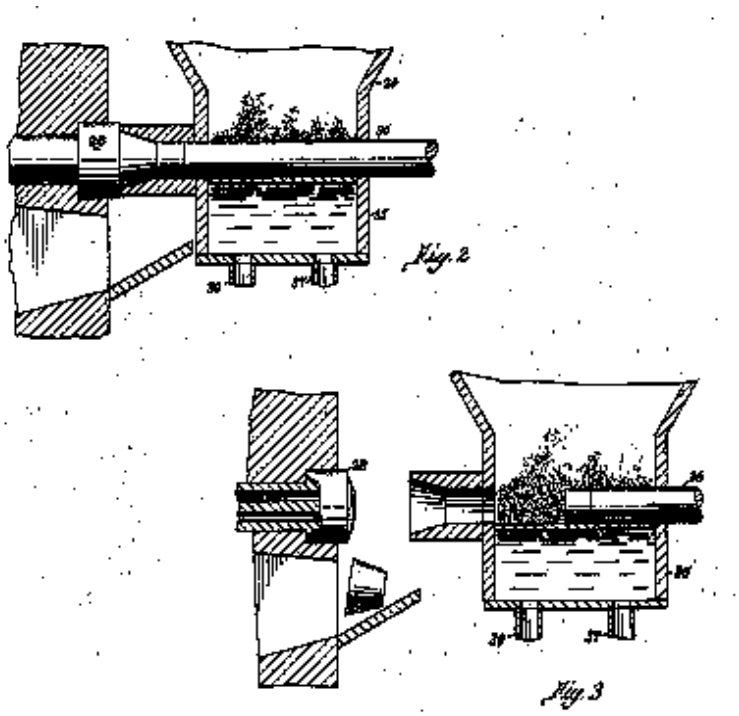

US-A-4123210

References

Informative references

Attention is drawn to the following places, which may be of interest for search:

Manufacture of articles from scrap or waste metal particles	B22F 8/00
Preliminary treatment of ores or scrap Agglomerating; Briquetting; Binding; Granulating - of metal scrap or alloys	C22B 1/248

B30B 9/328

{for making furnace charges}

Definition statement

This place covers:

Illustrative example of subject matter classified in this group:

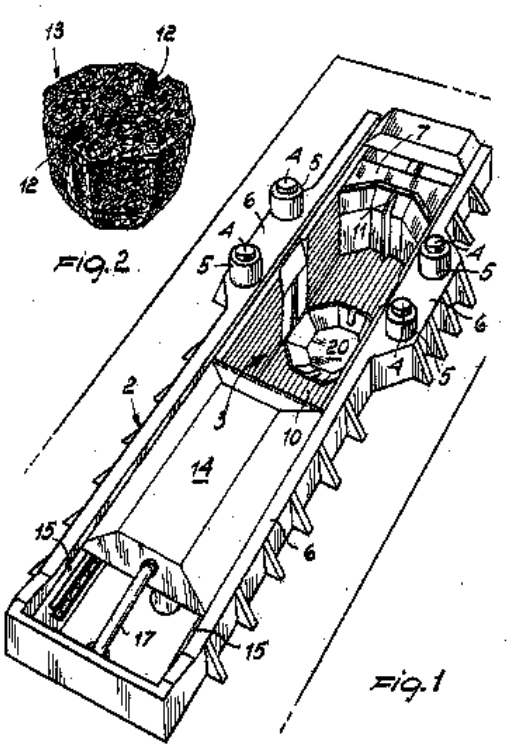

US-A-4103610

References

Informative references

Attention is drawn to the following places, which may be of interest for search:

Preliminary treatment of ores or scrap Agglomerating; Briquetting; Binding; Granulating - of metal scrap or alloys	C22B 1/248

B30B 11/00

Presses specially adapted for forming shaped articles from material in particulate or plastic state, e.g. briquetting presses, tabletting presses (for clay or mixtures containing cement B28B; for plastics materials B29)

Definition statement

This place covers:

Presses specially adapted for forming shaped articles from material in particulate or plastic state in general and also those presses specially adapted for forming shaped articles from material in particulate or plastic state, which are not provided for elsewhere.

B30B 11/001

{using a flexible element, e.g. diaphragm, urged by fluid pressure; Isostatic presses}

Definition statement

This place covers:

Illustrative example of subject matter classified in this group:

DE-A-3115470

FIG. 1

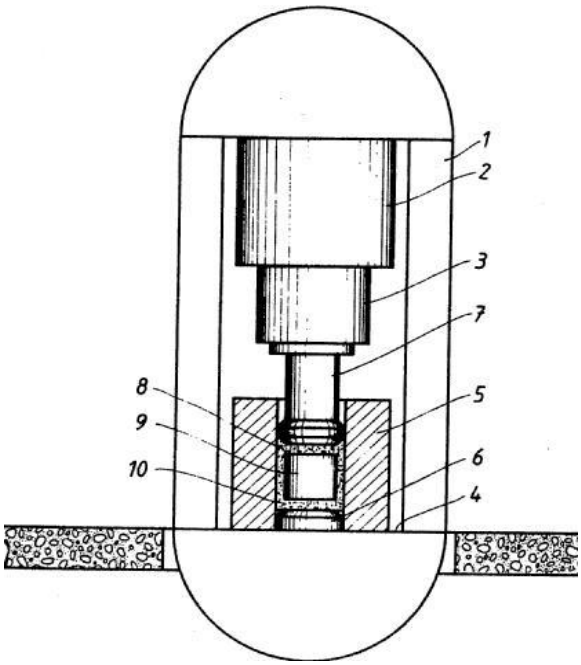

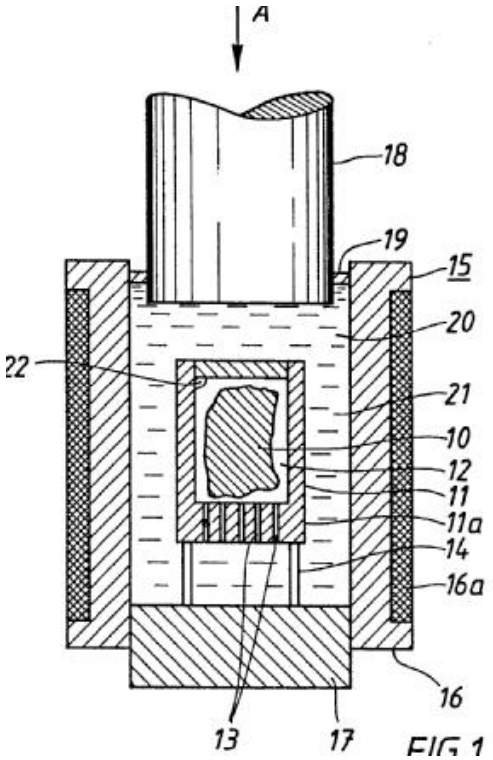

EP-A-0180935

B30B 11/002

{Isostatic press chambers; Press stands therefor}

Definition statement

This place covers:

Illustrative example of subject matter classified in this group:

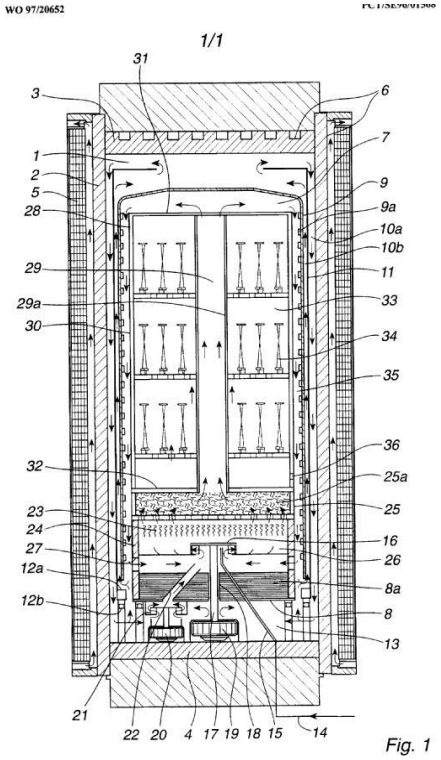

WO-A-9720652

References

Informative references

Attention is drawn to the following places, which may be of interest for search:

Metal powder HIP	B22F 3/003, B22F 3/15
Pressure vessels	F16J
Autoclaves furnaces	F27B, B01J 3/04

Glossary of terms

In this place, the following terms or expressions are used with the meaning indicated:

HIP	hot isostatic press
CIP	cold isostatic press

B30B 11/003

{using a roller with radially arranged vanes dividing the pressing space in separate chambers}

Definition statement

This place covers:

Illustrative example of subject matter classified in this group:

EP-A-0280518

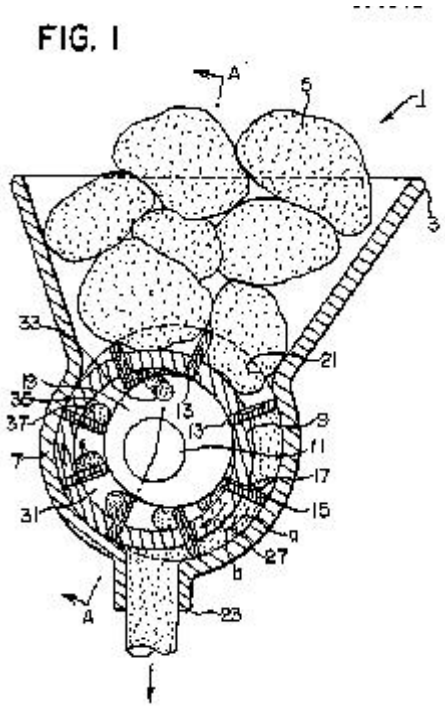

B30B 11/004

{involving the use of very high pressures, (for the formation of artificial diamonds or boronitrides B01J 3/065)}

Definition statement

This place covers:

Illustrative example of subject matter classified in this group:

US-A-5780139

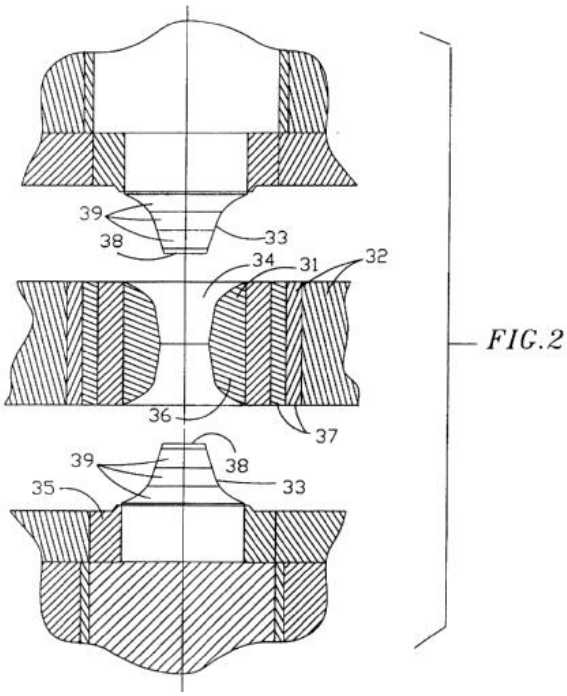

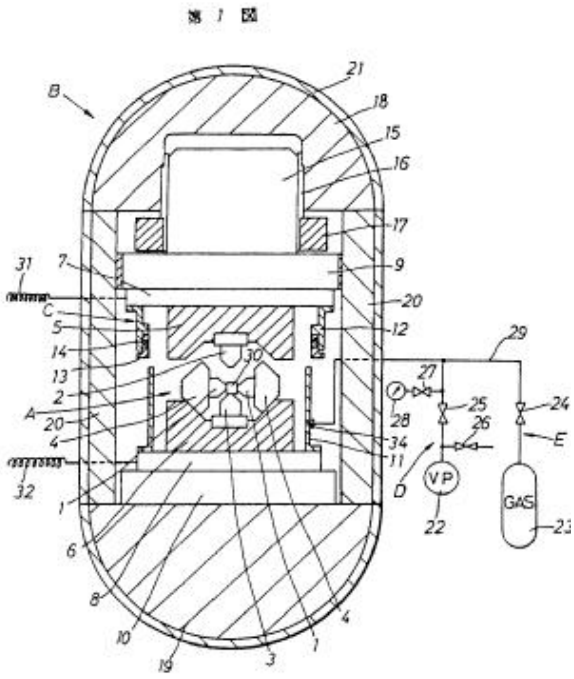

JP-A-63036829

B30B 11/005

{Control arrangements}

Definition statement

This place covers:

Illustrative example of subject matter classified in this group:

GB-A-2084350

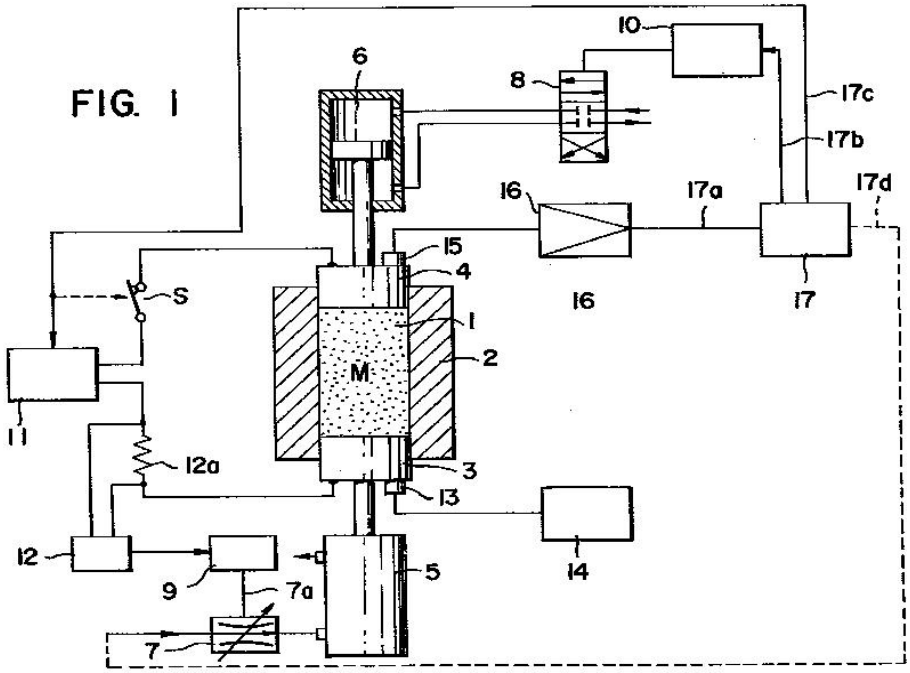

B30B 11/006

{for roller presses}

Definition statement

This place covers:

Illustrative example of subject matter classified in this group:

JP-A-9070697

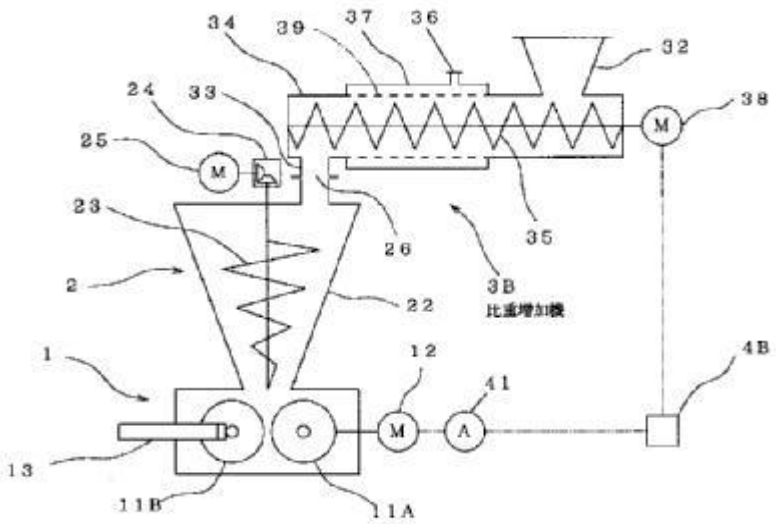

DE-A-3207856

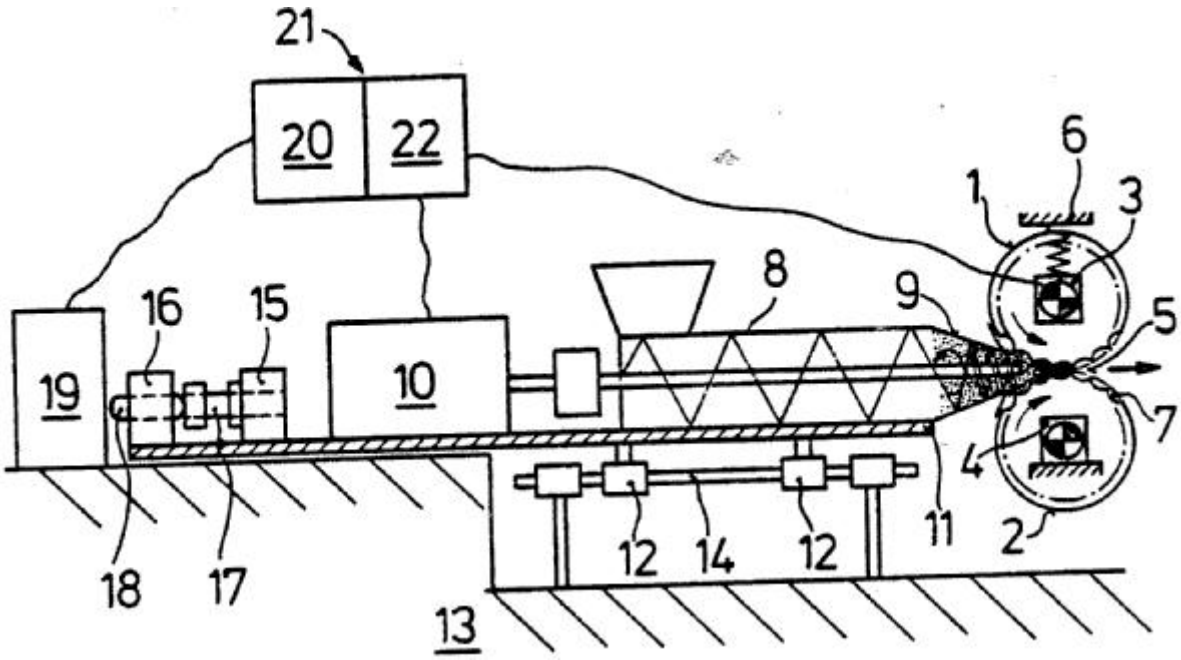

B30B 11/007

{using a plurality of pressing members working in different directions}

Definition statement

This place covers:

Illustrative example of subject matter classified in this group:

GB-A-1443823

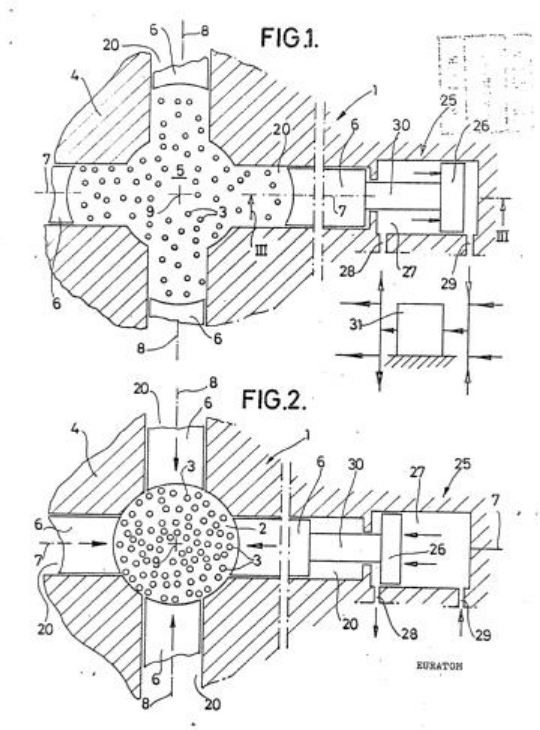

B30B 11/008

{Applying a magnetic field to the material}

Definition statement

This place covers:

Illustrative example of subject matter classified in this group:

DE-A-2629990

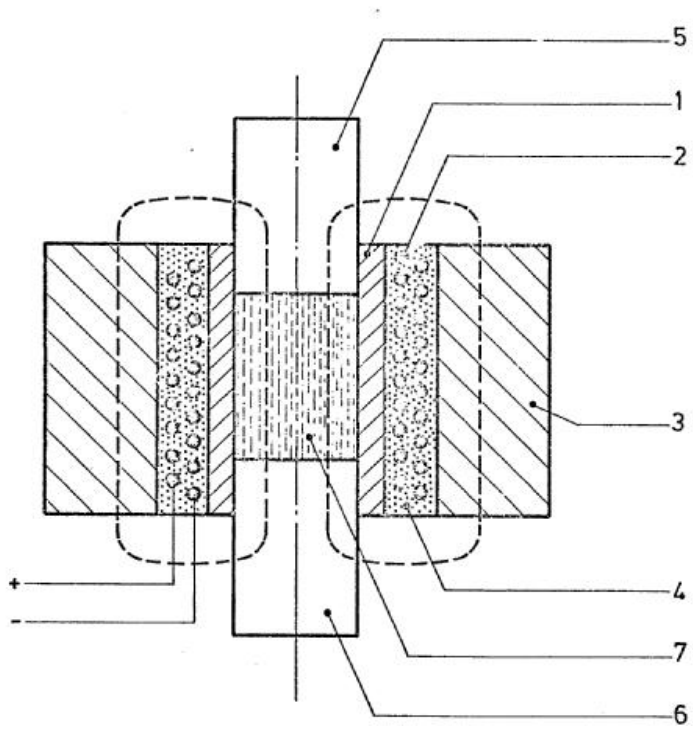

US-A-3985843

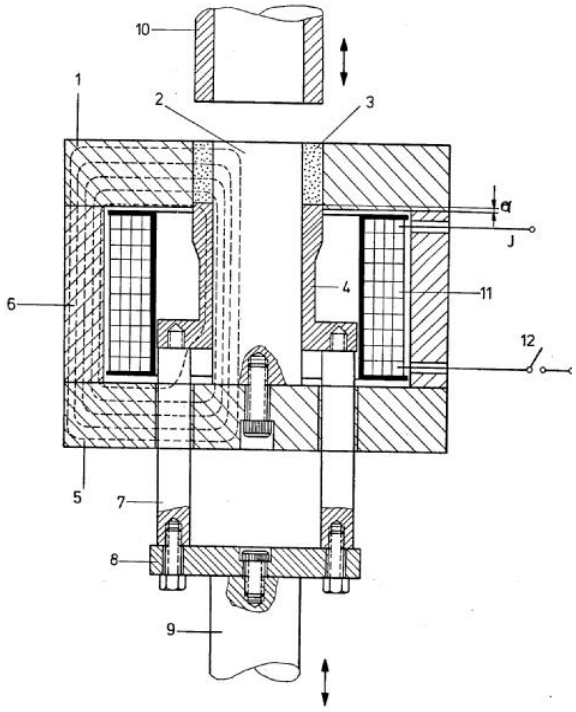

B30B 11/02

using a ram exerting pressure on the material in a moulding space

Definition statement

This place covers:

US-A-4260346

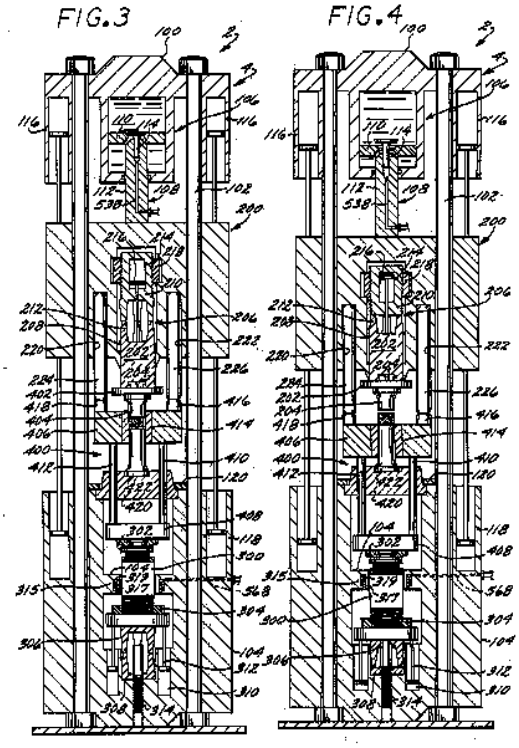

References

Informative references

Attention is drawn to the following places, which may be of interest for search:

Ram heads of special form wherein a ram exerts pressure on the material in a moulding space	B28B 3/02

B30B 11/022

{whereby the material is subjected to vibrations}

Definition statement

This place covers:

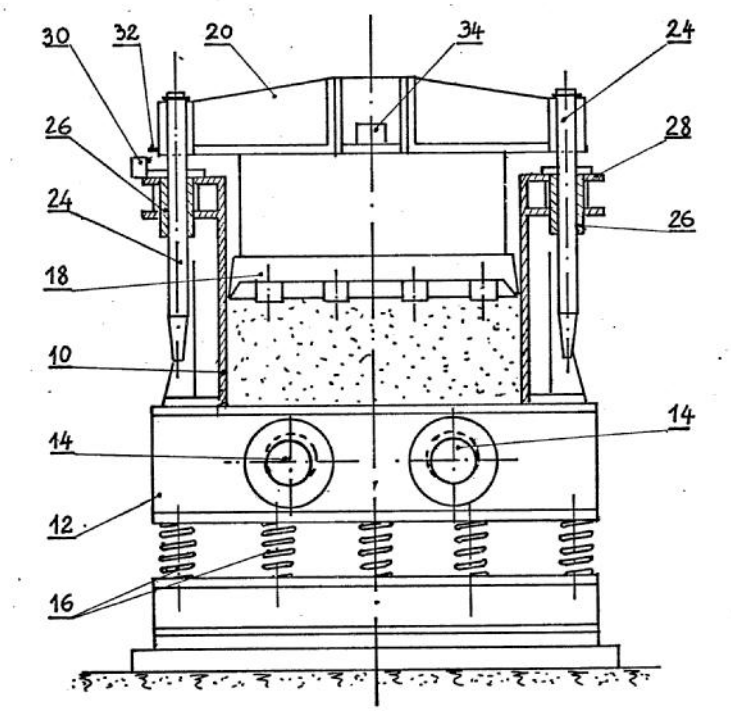

References

Informative references

Attention is drawn to the following places, which may be of interest for search:

Combined with vibrating or jolting	B28B 3/022

B30B 11/025

{whereby the material is transferred into the press chamber by relative movement between a ram and the press chamber}

Definition statement

This place covers:

Illustrative example of subject matter classified in this group:

EP-A-0066328

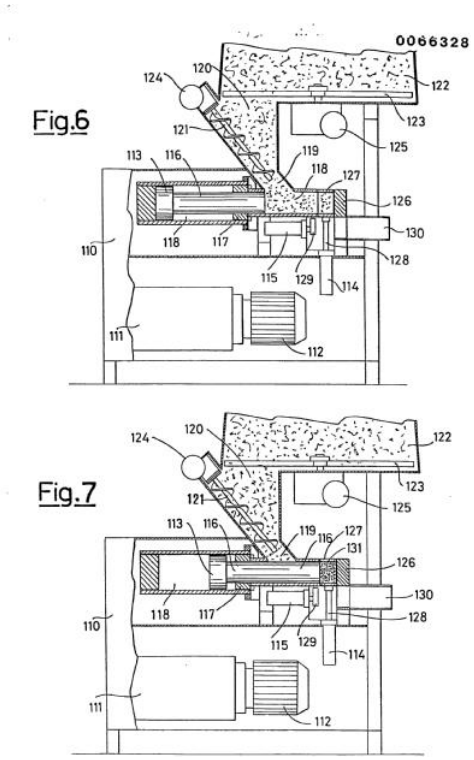

B30B 11/027

{Particular press methods or systems}

Definition statement

This place covers:

Illustrative example of subject matter classified in this group:

WO-A-03096963

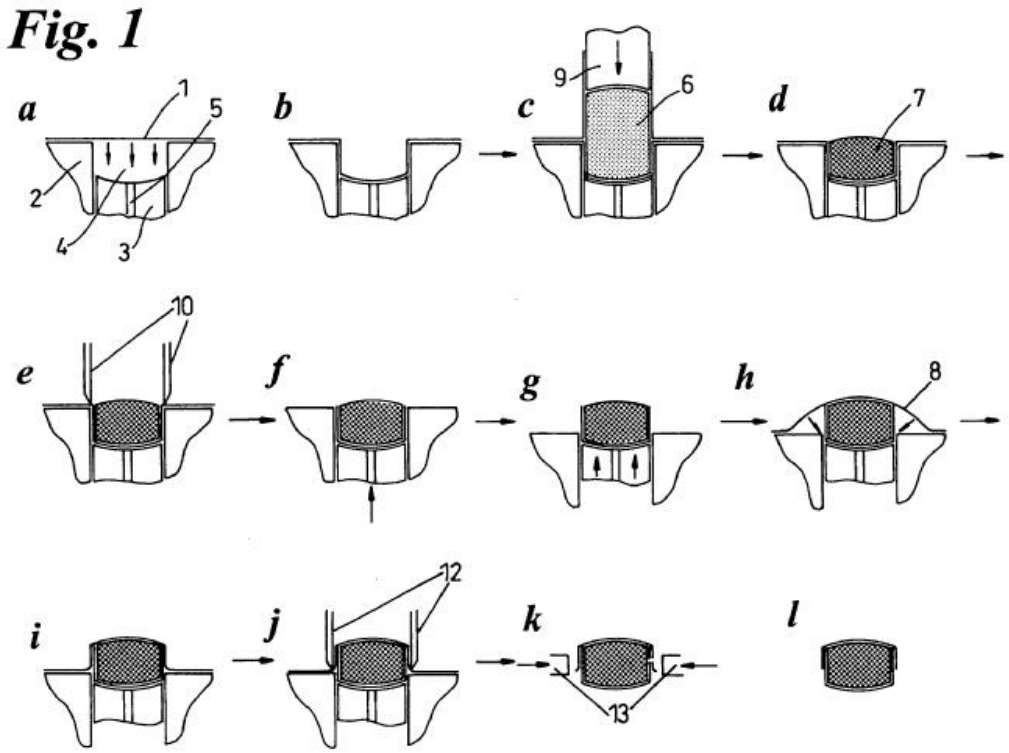

B30B 11/04

co-operating with a fixed mould

Definition statement

This place covers:

Illustrative example of subject matter classified in this group:

DE-A-10110938

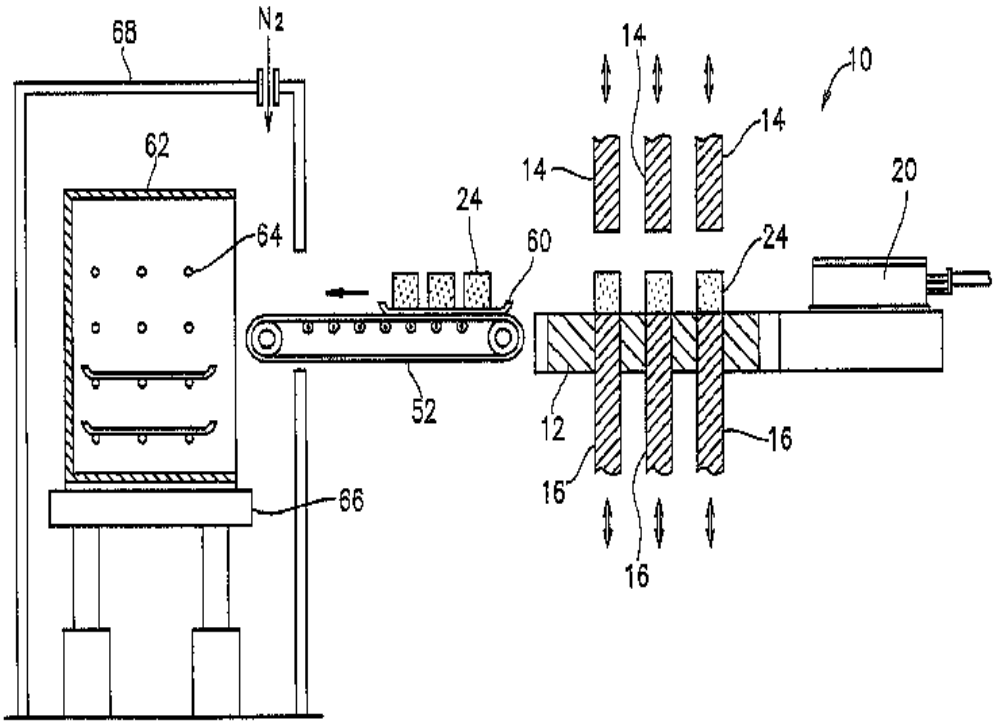

B30B 11/06

each charge of the material being compressed against the previously formed body

Definition statement

This place covers:

Illustrative example of subject matter classified in this group:

DE-A-102009053570

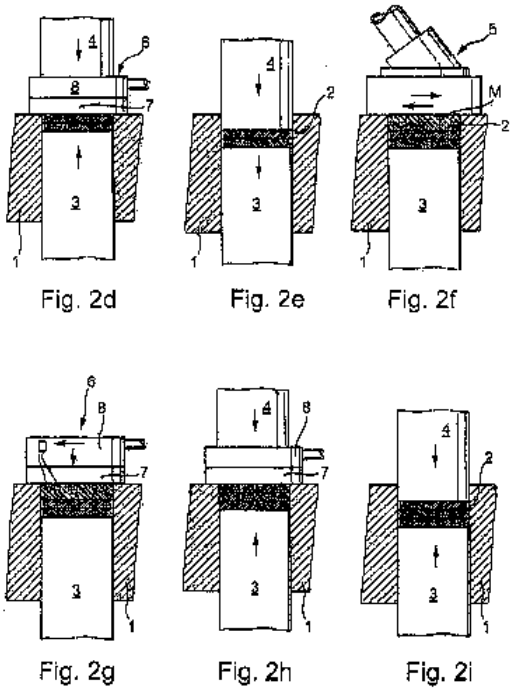

Fig. 2d Fig. 2e Fig. 2f

Fig. 2g Fig. 2h Fig. 2i

B30B 11/08

co-operating with moulds carried by a turntable

Definition statement

This place covers:

Illustrative example of subject matter classified in this group:

GB-A-1533601

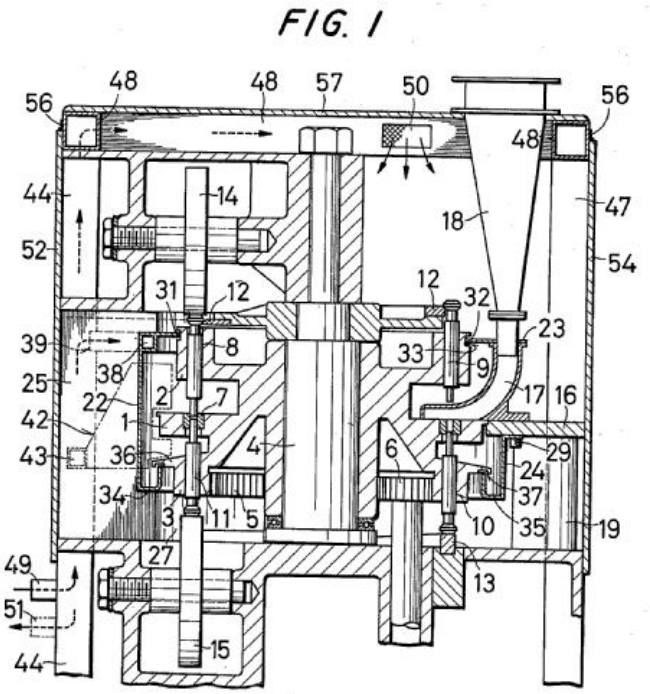

B30B 11/085

{for multi-layer articles}

Definition statement

This place covers:

Illustrative example of subject matter classified in this group:

EP1693182

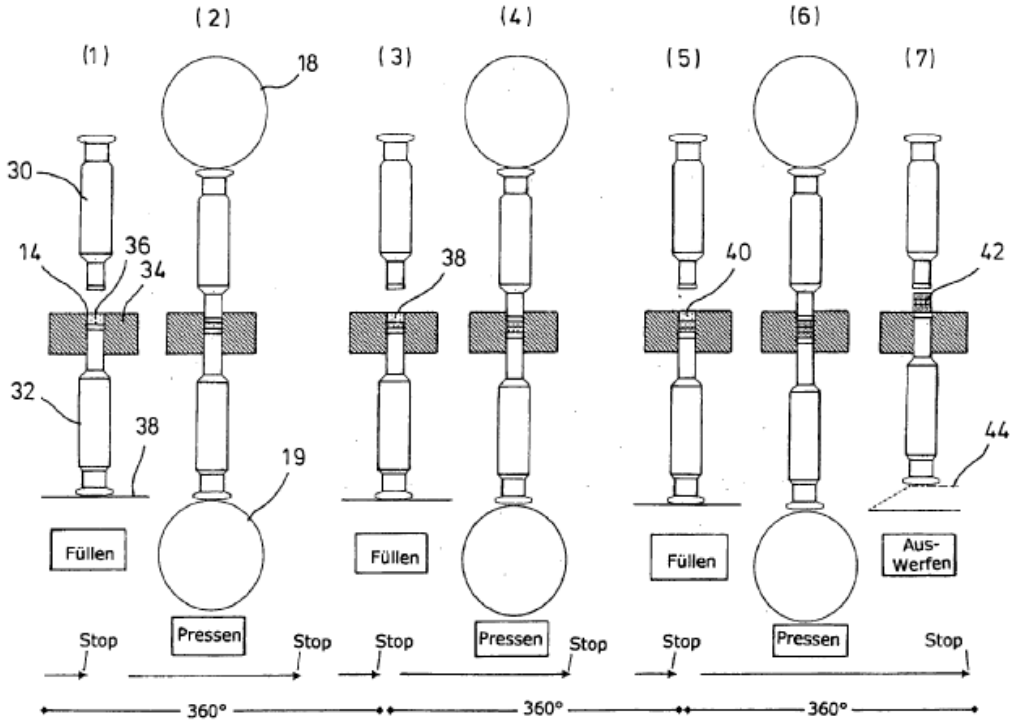

B30B 11/10

intermittently rotated

Definition statement

This place covers:

Illustrative example of subject matter classified in this group:

US-A-3577842

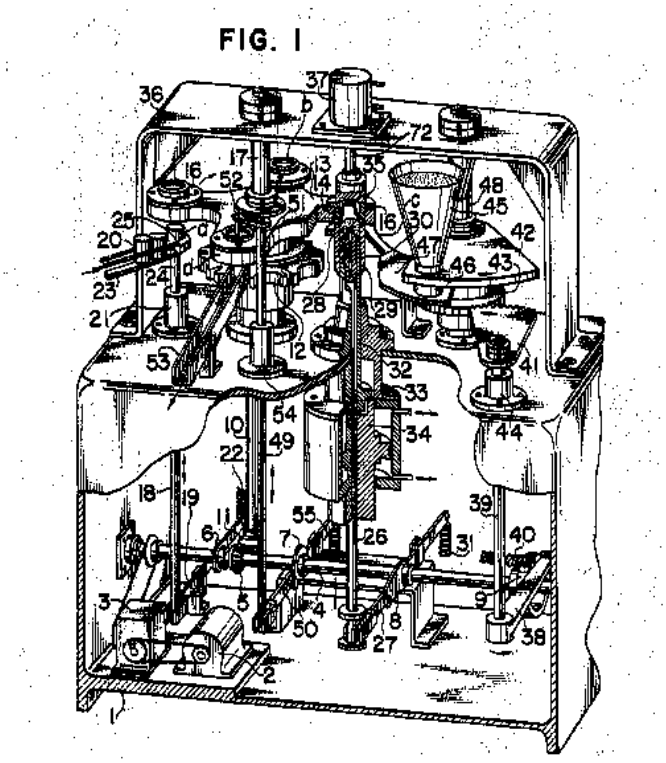

B30B 11/12

co-operating with moulds on the circumference of a rotating drum

Definition statement

This place covers:

Illustrative example of subject matter classified in this group:

WO-A-2005120957

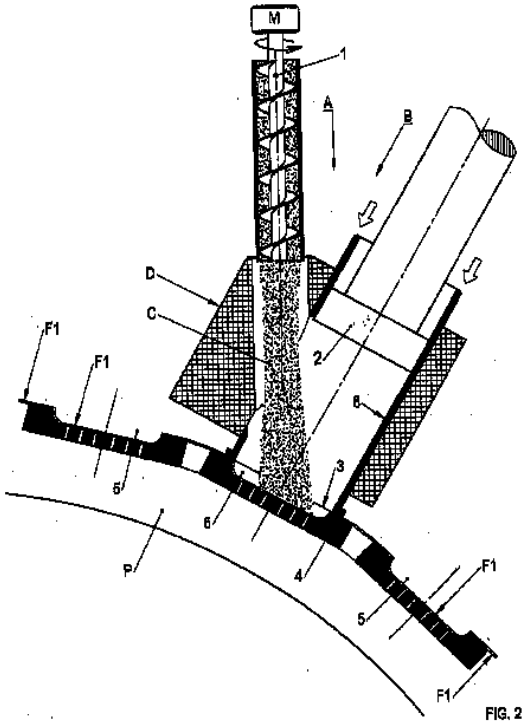

FIG. 2

B30B 11/14

co-operating with moulds on a movable carrier other than a turntable or a rotating drum

Definition statement

This place covers:

Illustrative example of subject matter classified in this group:

EP-A-0358105

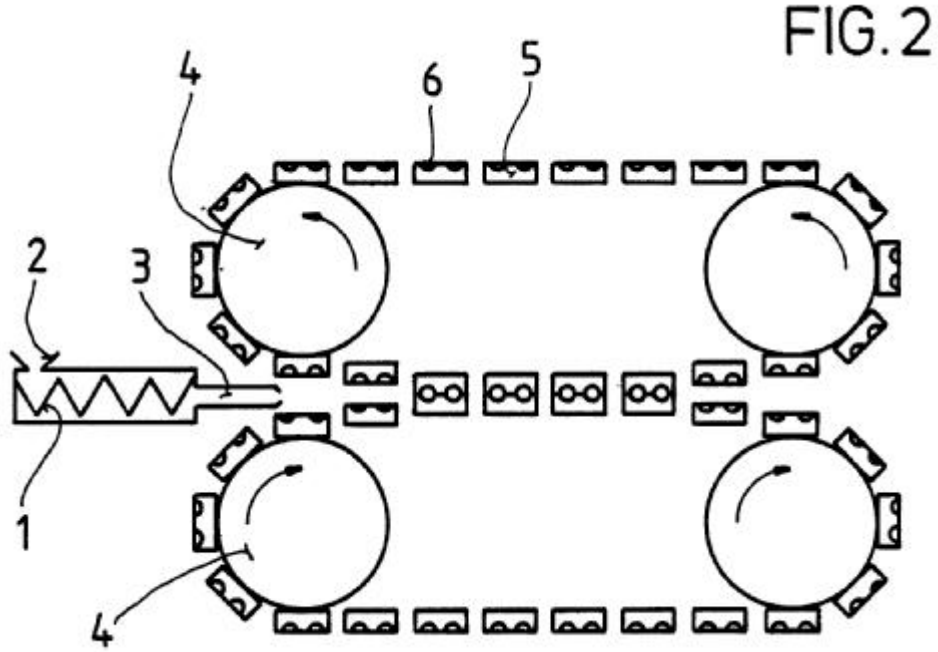

B30B 11/16

using pocketed rollers, e.g. two co-operating pocketed rollers

Definition statement

This place covers:

JP-A-10043894

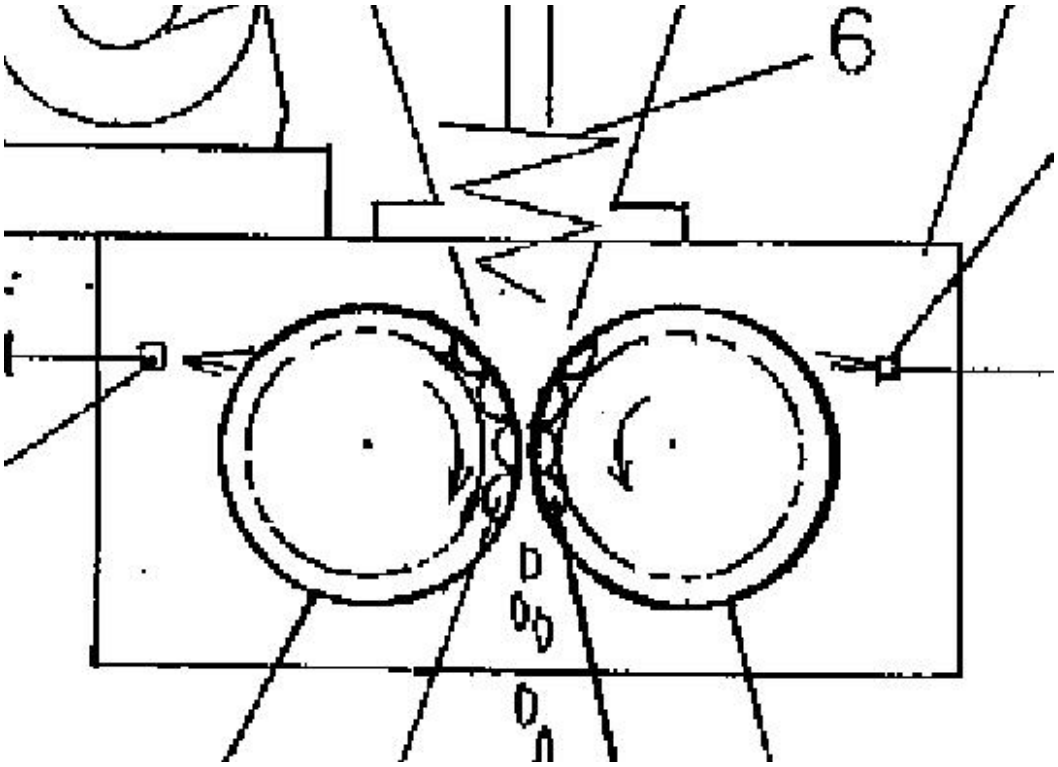

B30B 11/165

{Roll constructions}

Definition statement

This place covers:

Illustrative example of subject matter classified in this group:

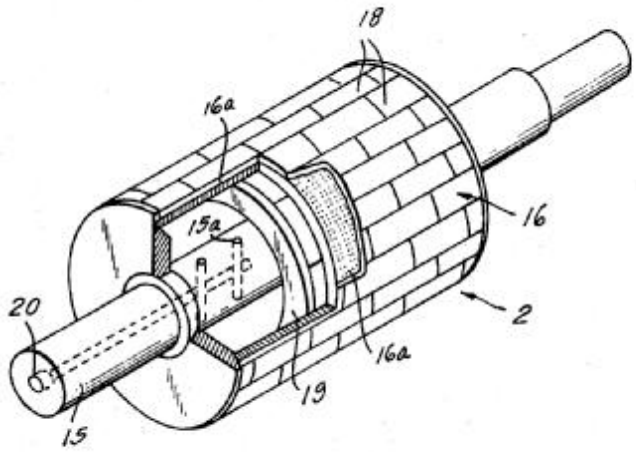

FIG. 2

US-A-3738785

B30B 11/18

using profiled rollers

Definition statement

This place covers:

Illustrative example of subject matter classified in this group:

FR-A-2313450

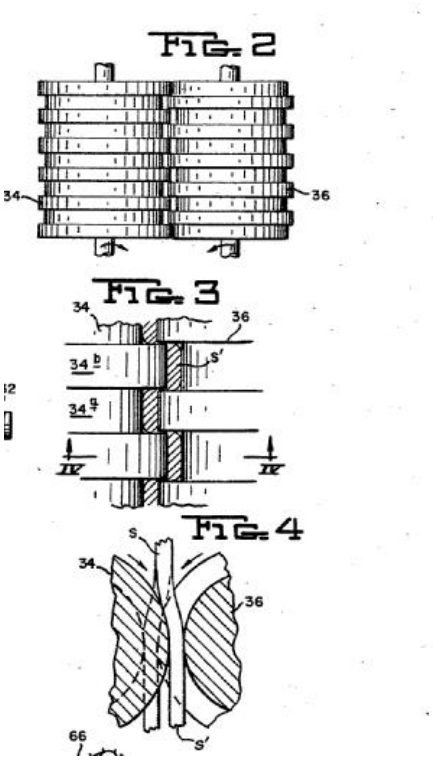

References

Informative references

Attention is drawn to the following places, which may be of interest for search:

With co-operating profiled rollers	B28B 3/16

B30B 11/20

Roller-and-ring machines, i.e. with roller disposed within a ring and co-operating with the inner surface of the ring

Definition statement

This place covers:

Illustrative example of subject matter classified in this group:

DE-B-1458281

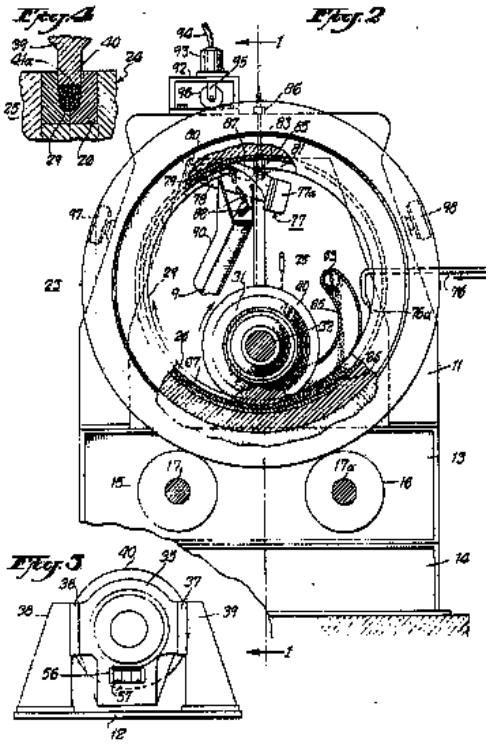

References

Informative references

Attention is drawn to the following places, which may be of interest for search:

Roller-and-ring machines, i.e. with roller disposed within a ring and co-operating with the inner surface of the ring	B28B 3/18

B30B 11/201

{for extruding material}

Definition statement

This place covers:

Illustrative example of subject matter classified in this group:

JP-A-2005288508

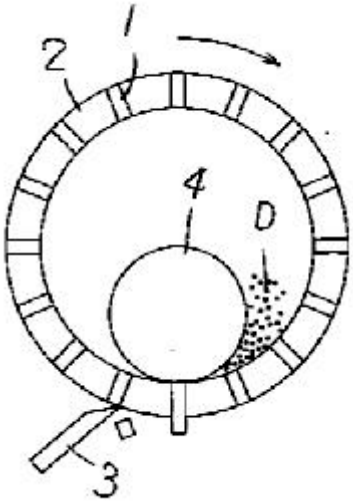

B30B 11/202

{Ring constructions}

Definition statement

This place covers:

Illustrative example of subject matter classified in this group:

WO-A-2004022324

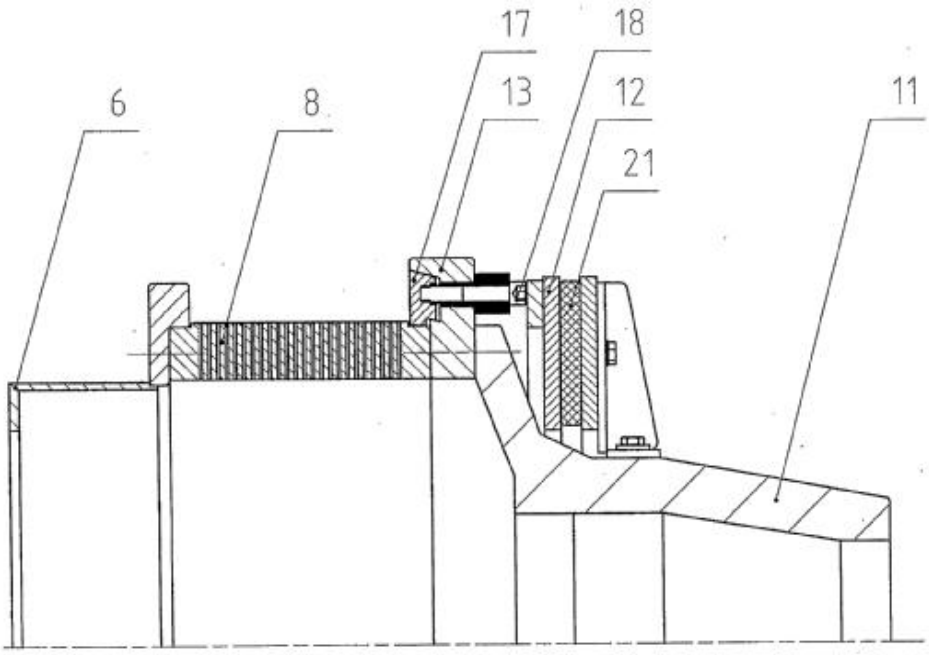

B30B 11/204

{Rings with adjustable extrusion openings}

Definition statement

This place covers:

Illustrative example of subject matter classified in this group:

US-a-3253557

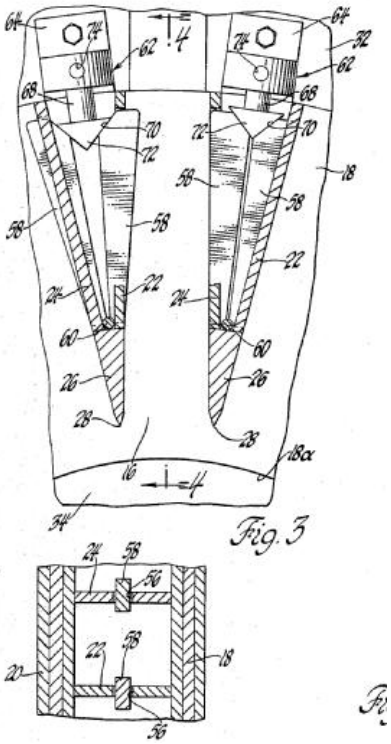

Fig. 3

B30B 11/205

{using an annular series of radial die cells, especially for crop material}

Definition statement

This place covers:

Illustrative example of subject matter classified in this group:

US-A-3327653

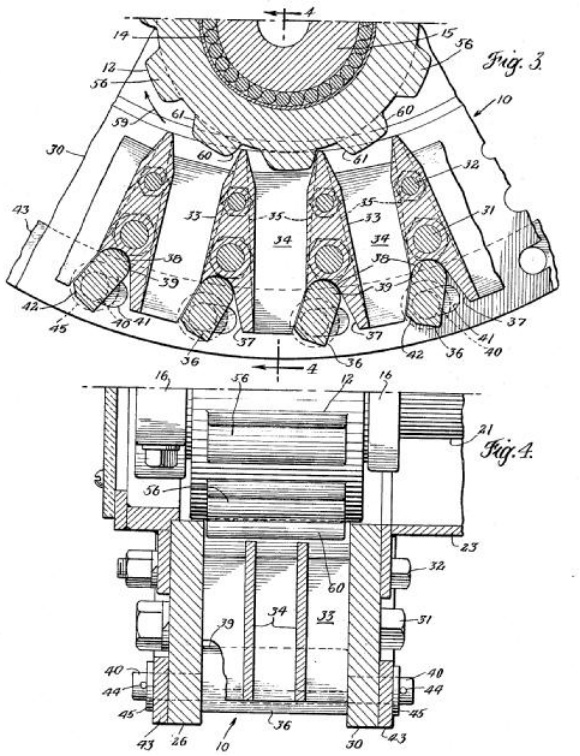

B30B 11/207

{Feed means}

Definition statement

This place covers:

Illustrative example of subject matter classified in this group:

DE-A-102006021775

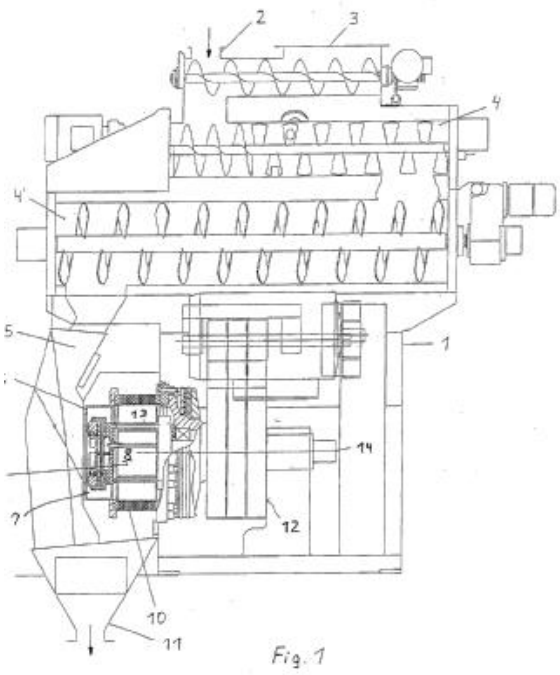

B30B 11/208

{Roller constructions; Mounting of the rollers}

Definition statement

This place covers:

Illustrative example of subject matter classified in this group:

WO-A-2004073963

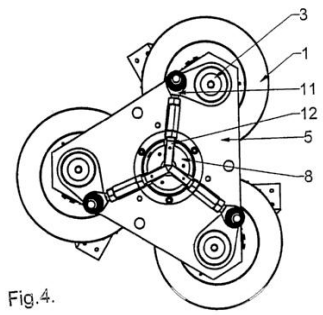

Fig.4.

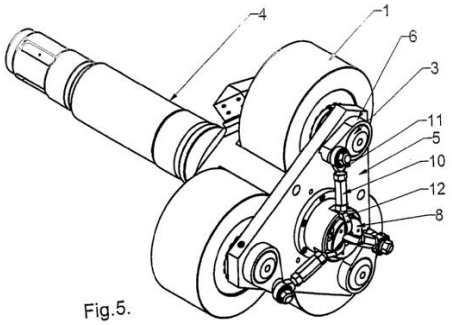

Fig.5.

B30B 11/22

Extrusion presses; Dies therefor (extruding by the use of roller-and-ring machines B30B 11/20)

References

Informative references

Attention is drawn to the following places, which may be of interest for search:

Wherein the material is extruded	B28B 3/20
Extrusion moulding of plastics	B29C 48/00

B30B 11/221

{extrusion dies}

Definition statement

This place covers:

Illustrative example of subject matter classified in this group:

WO03096963

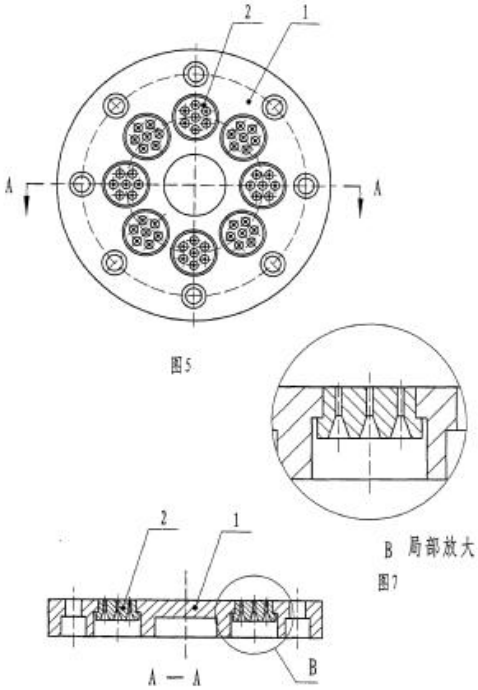

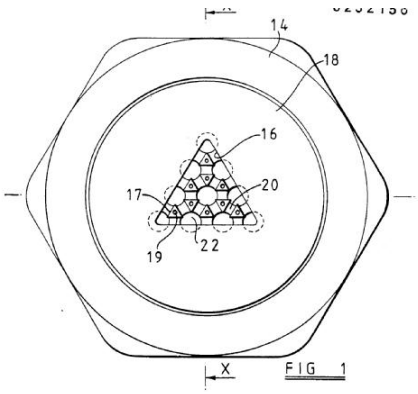

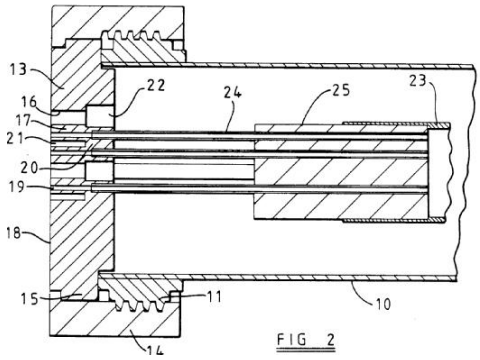

US-A-4834635

References

Informative references

Attention is drawn to the following places, which may be of interest for search:

Extrusion dies	B28B 3/26

B30B 11/222

{using several circumferentially spaced rollers, e.g. skewed rollers}

Definition statement

This place covers:

Illustrative example of subject matter classified in this group:

US-A-3520250

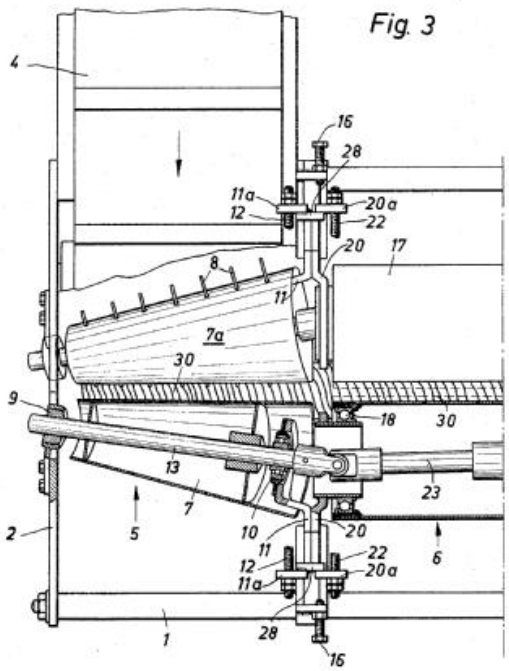

B30B 11/224

{Extrusion chambers}

Definition statement

This place covers:

Illustrative example of subject matter classified in this group:

DE-A-3208312

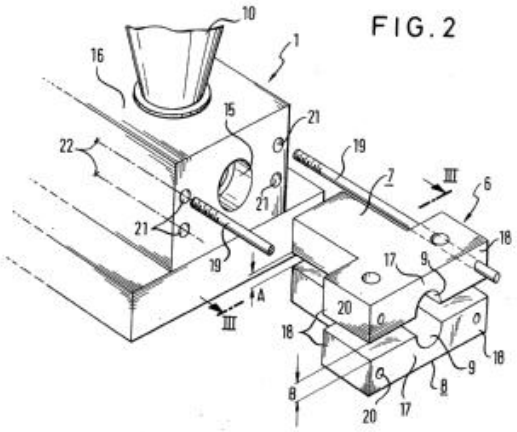

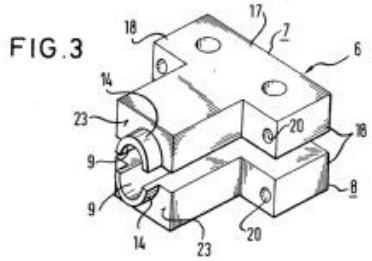

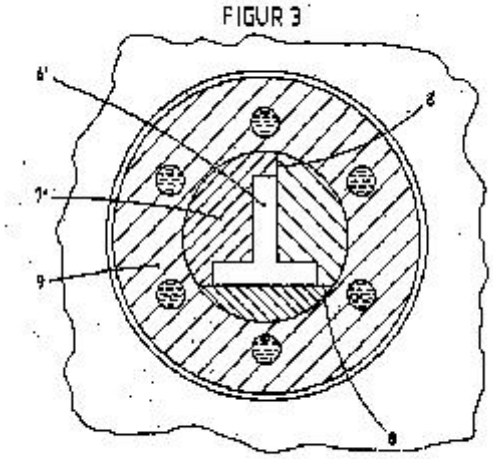

DE-A-4104502

B30B 11/225

{with adjustable outlet opening}

Definition statement

This place covers:

Illustrative example of subject matter classified in this group:

WO-A-9104150

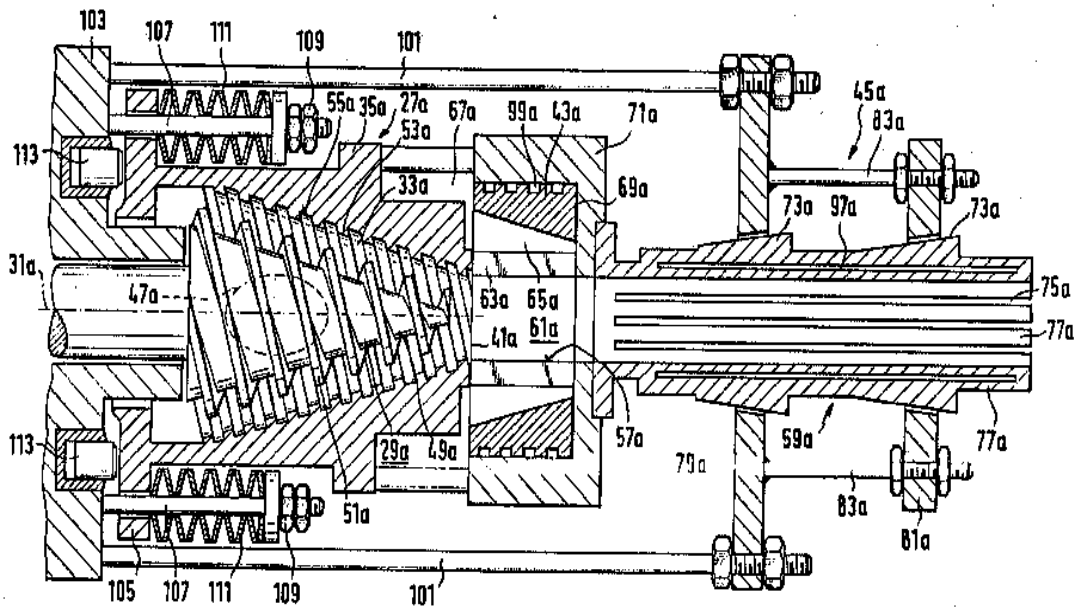

B30B 11/227

{Means for dividing the extruded material into briquets}

Definition statement

This place covers:

Illustrative example of subject matter classified in this group:

WO-A-9727994

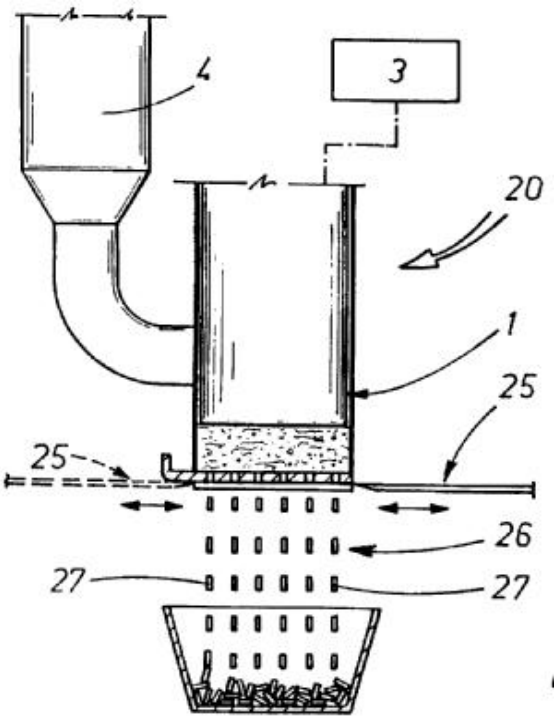

B30B 11/228

{using pressing means, e.g. rollers moving over a perforated die plate}

Definition statement

This place covers:

Illustrative example of subject matter classified in this group:

CH-A-311101

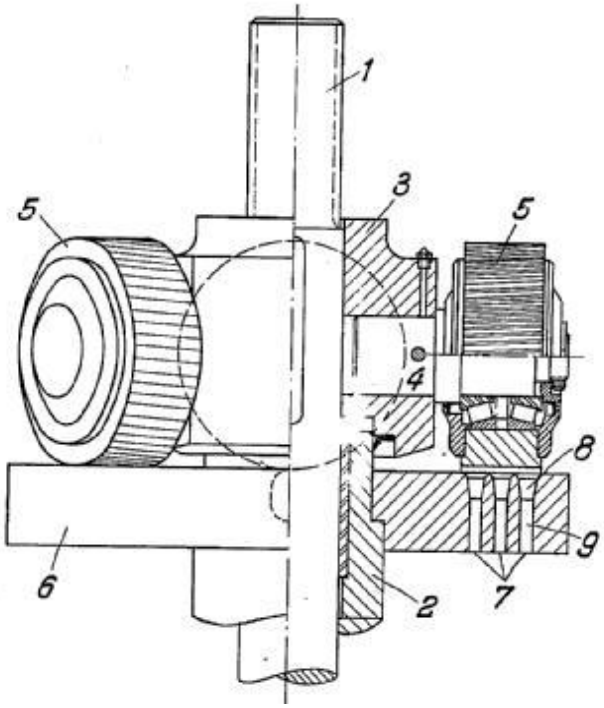

US-A-4511321

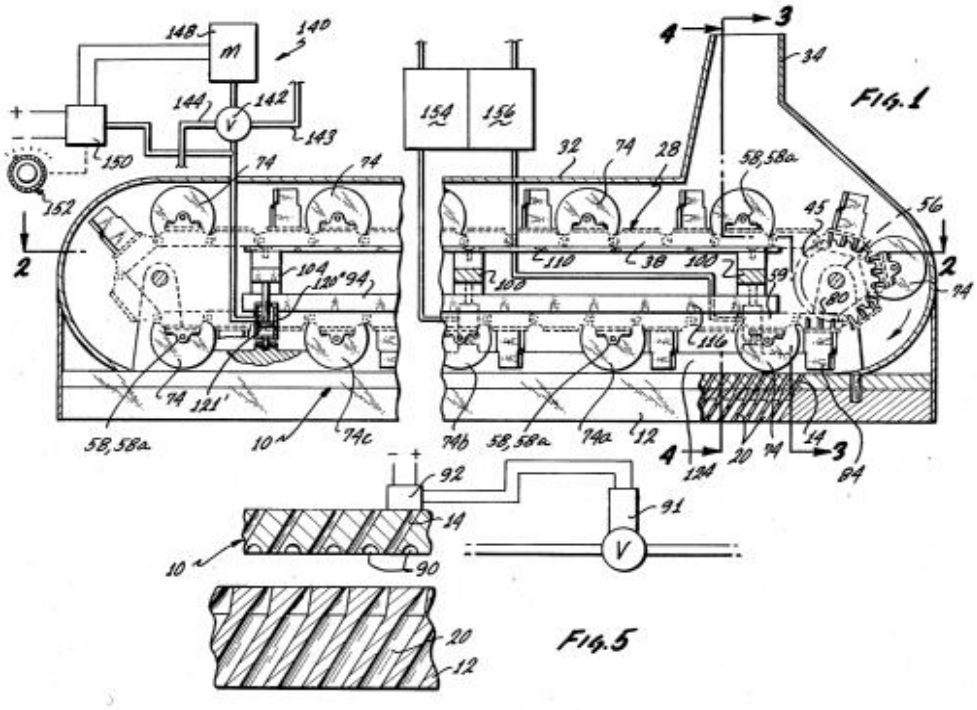

B30B 11/24

using screws or worms

References

Informative references

Attention is drawn to the following places, which may be of interest for search:

By screw or worm	B28B 3/22

B30B 11/241

{Drive means therefor; screw bearings}

Definition statement

This place covers:

Illustrative example of subject matter classified in this group:

WO-A-2007059547

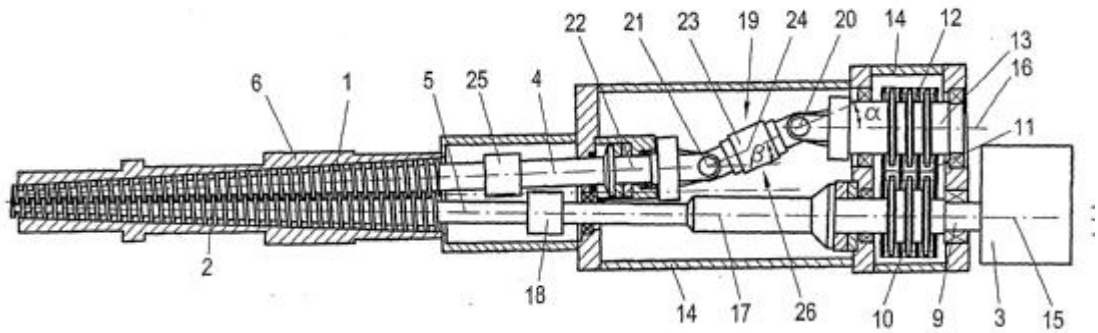

Fig. 1

B30B 11/243

{using two or more screws working in the same chamber}

Definition statement

This place covers:

Illustrative example of subject matter classified in this group:

WO-A-2007059547

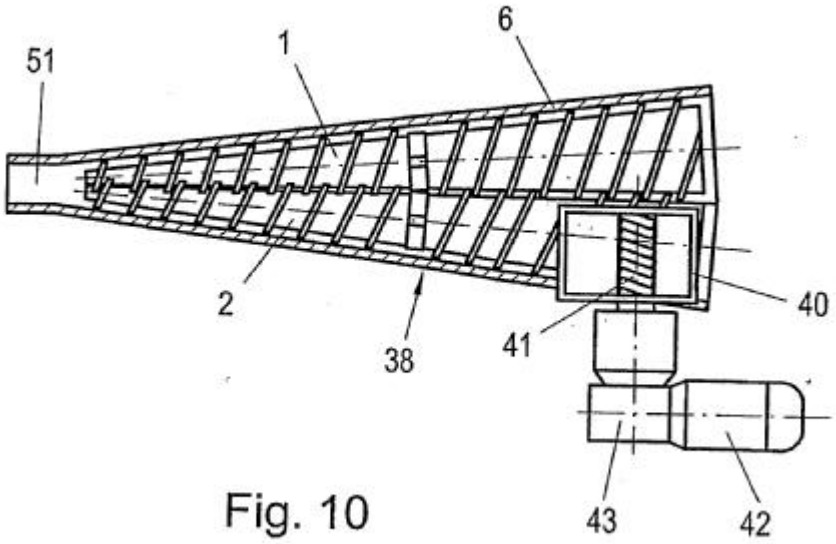

Fig. 10

US-A-5232170

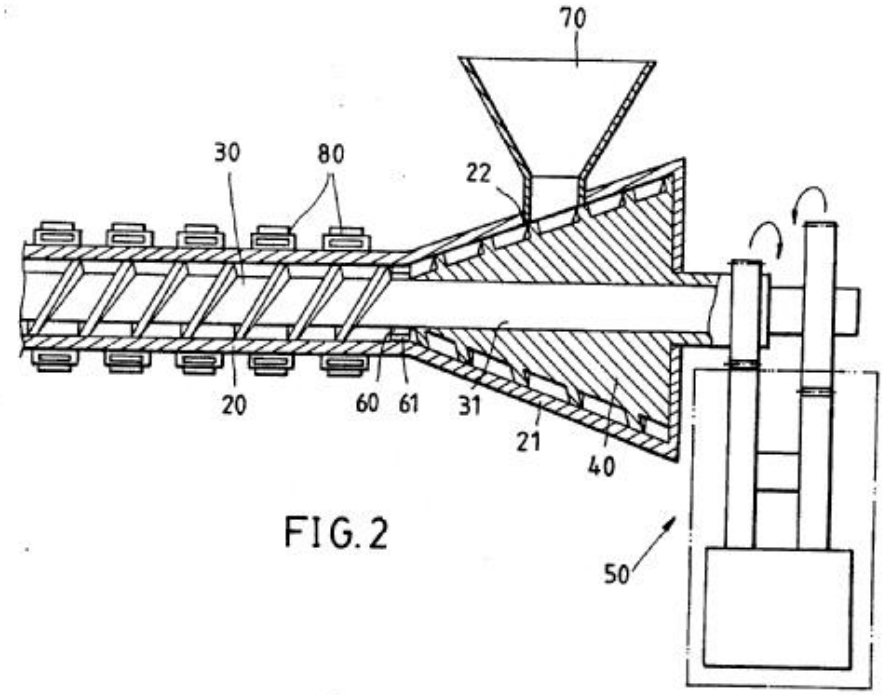

FIG. 2

B30B 11/245

{using two or more screws working in different chambers}

Definition statement

This place covers:

Illustrative example of subject matter classified in this group:

GB-A-733585

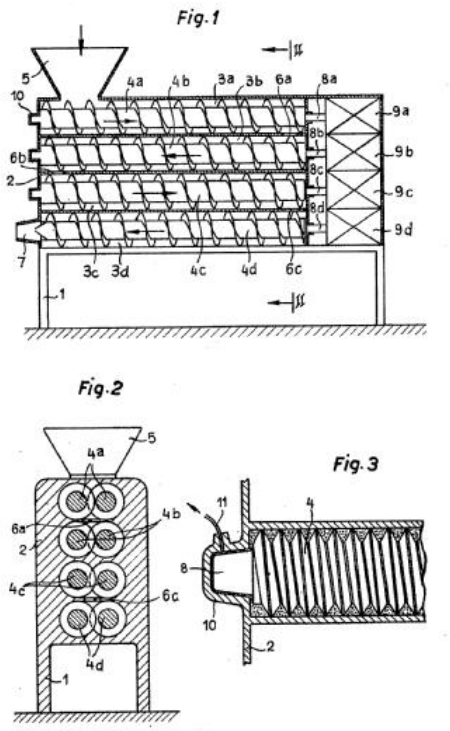

B30B 11/246

{Screw constructions}

Definition statement

This place covers:

Illustrative example of subject matter classified in this group:

US-A-5673618

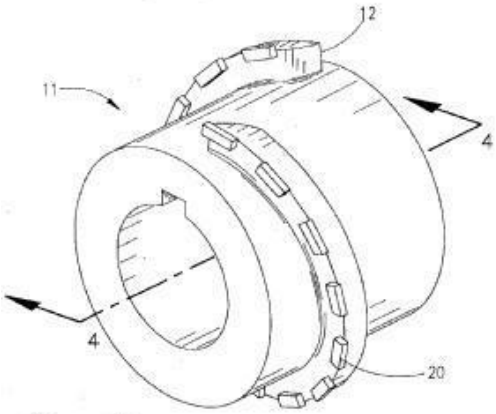

Fig. 3

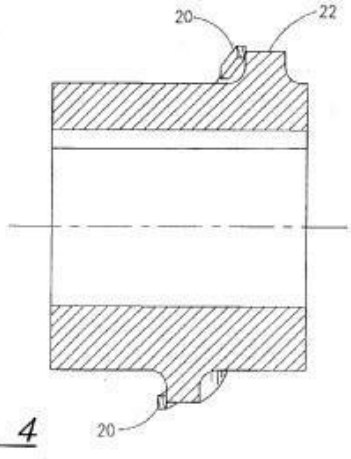

Fig. 4

WO-A-9407688

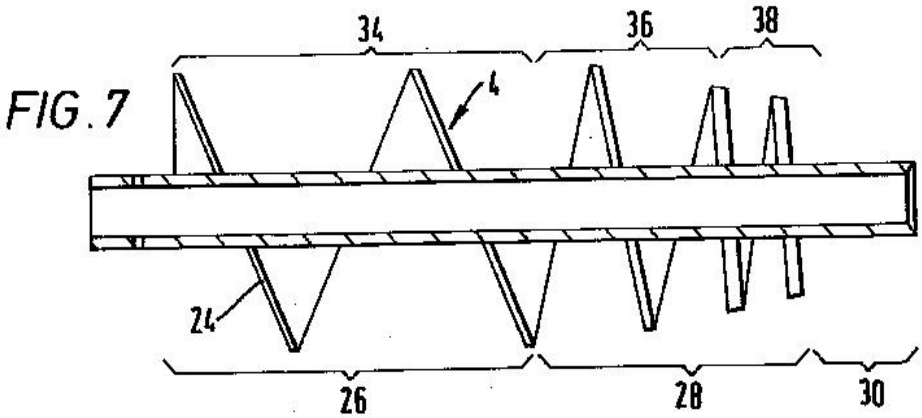

B30B 11/248

{Means preventing the material from turning with the screw or returning towards the feed hopper}

Definition statement

This place covers:

Illustrative example of subject matter classified in this group:

FR-A-1287523

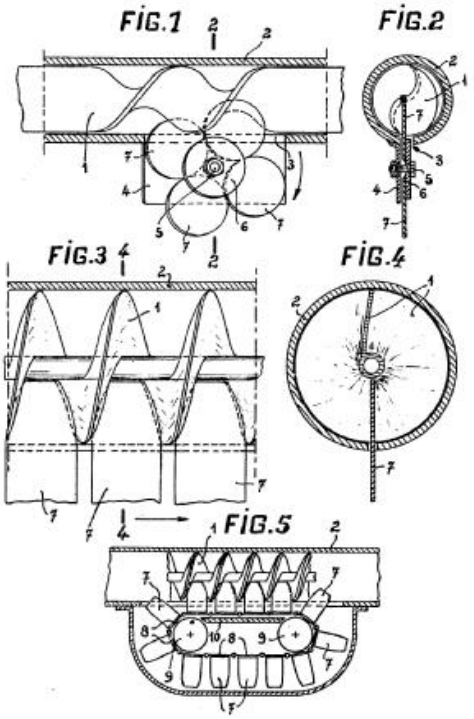

B30B 11/26

using press rams

Definition statement

This place covers:

Illustrative example of subject matter classified in this group:

DE-A-3233121

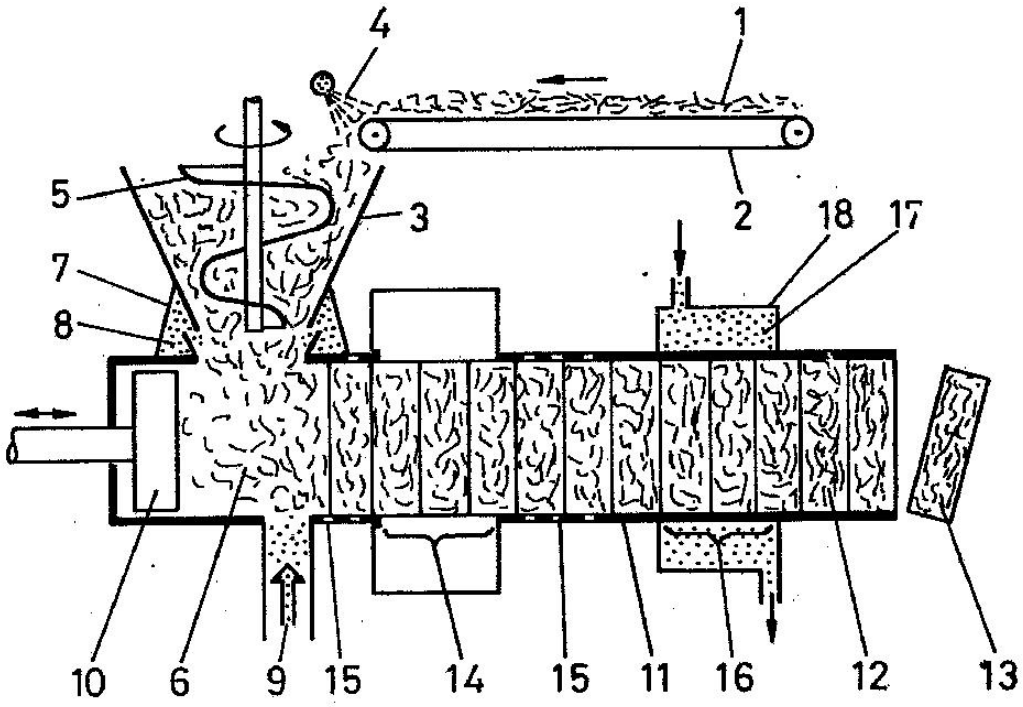

References

Informative references

Attention is drawn to the following places, which may be of interest for search:

By reciprocating plunger	B28B 3/24

B30B 11/265

{with precompression means}

Definition statement

This place covers:

Illustrative example of subject matter classified in this group:

US-A-4371328

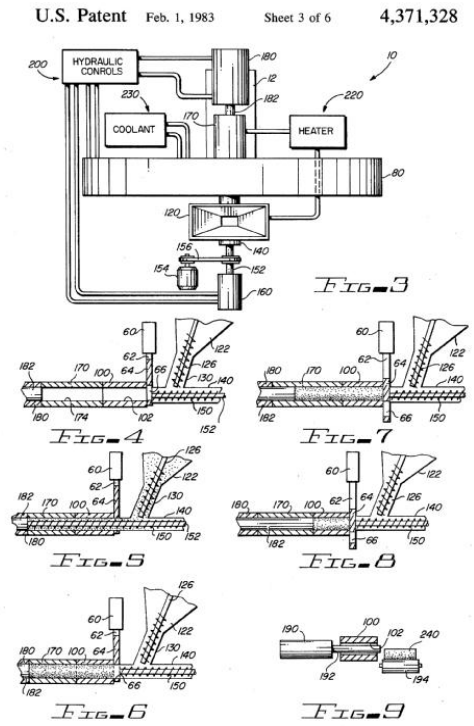

B30B 11/28

using perforated rollers or discs

Definition statement

This place covers:

Illustrative example of subject matter classified in this group:

JP-A-2005288508

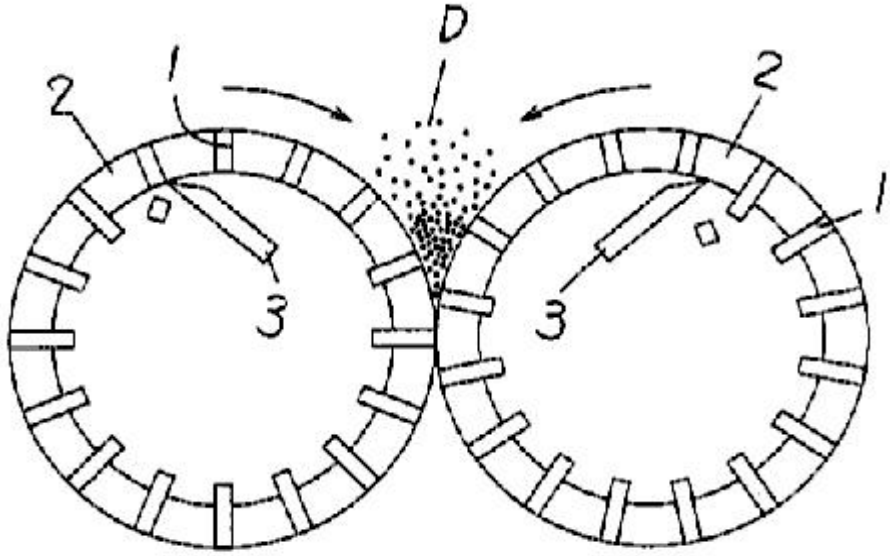

B30B 11/30

using directly-acting fluid pressure

Definition statement

This place covers:

Illustrative example of subject matter classified in this group:

US-A-3771221

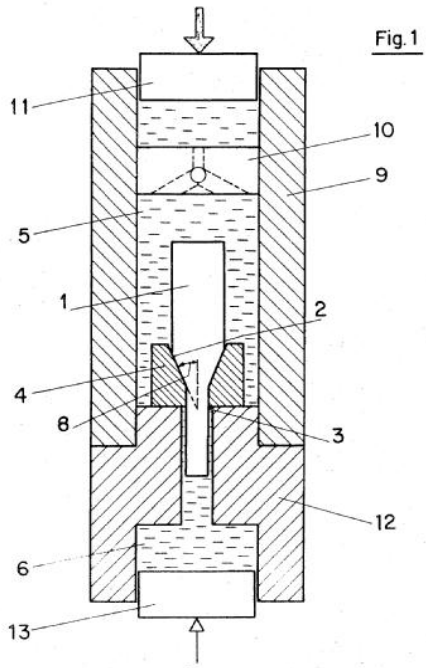

B30B 11/34

for coating articles, e.g. tablets

Definition statement

This place covers:

Illustrative example of subject matter classified in this group:

US2004113319

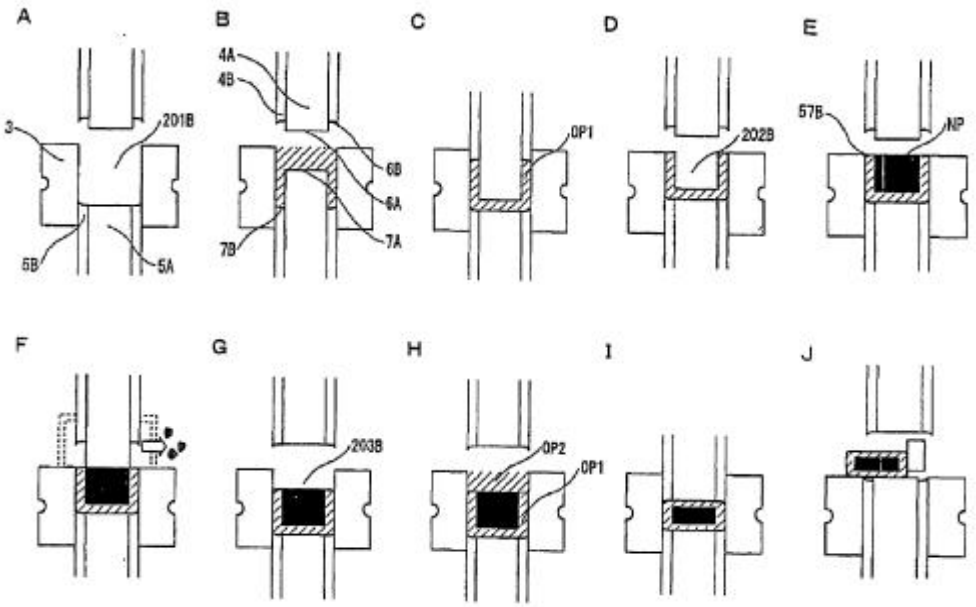

GB-A-1034713

US-A-3096248

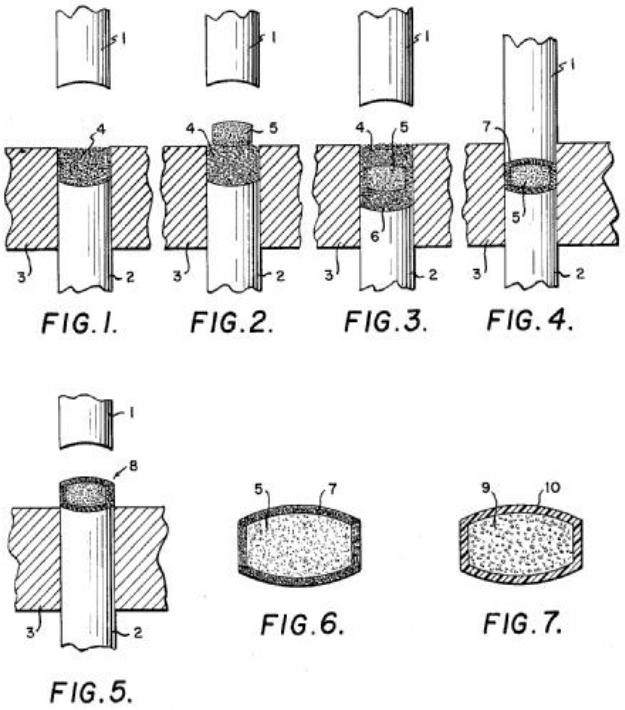

B30B 12/00

Presses not provided for in groups B30B 1/00 - B30B 11/00

Definition statement

This place covers:

Presses not provided for in groups B30B 1/00 - B30B 11/00 in general and also those presses not provided for in groups B30B 1/00 - B30B 11/00, which are not provided for elsewhere.

B30B 13/00

Methods of pressing not special to the use of presses of any one of the preceding main groups

Definition statement

This place covers:

Methods of pressing not special to the use of presses in general and also methods of pressing for those presses, for particular purposes, which are not provided for elsewhere of any one of the preceding main groups B30B 1/00 - B30B 12/00

B30B 15/00

Details of, or accessories for, presses; Auxiliary measures in connection with pressing (safety devices F16P)

Definition statement

This place covers:

Details of, or accessories for presses in general and also for those presses, for particular purposes, which are not provided for elsewhere; Auxiliary measures in connection with pressing in presses in general and also in those presses, for particular purposes, which are not provided for elsewhere

B30B 15/0005

{for briquetting presses}

Definition statement

This place covers:

Illustrative example of subject matter classified in this group:

FR-A- 2200255

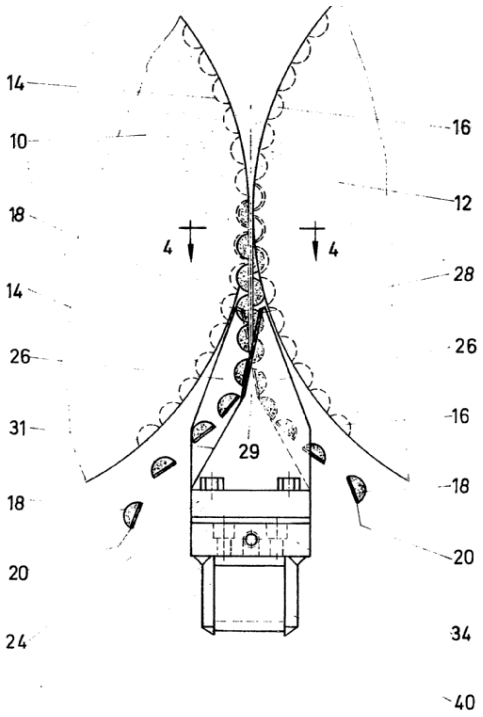

Fig. 1

B30B 15/0011

{lubricating means}

Definition statement

This place covers:

Illustrative example of subject matter classified in this group:

US-A-5643630

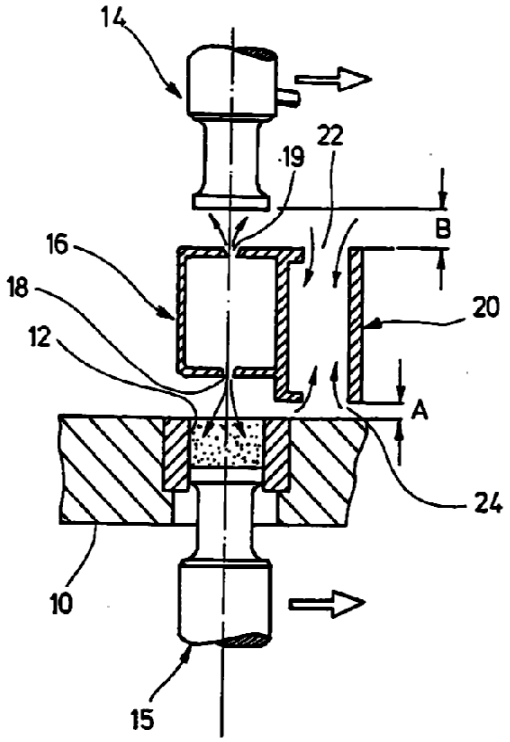

B30B 15/0017

{Deairing means}

Definition statement

This place covers:

Illustrative example of subject matter classified in this group:

US-A-3832107

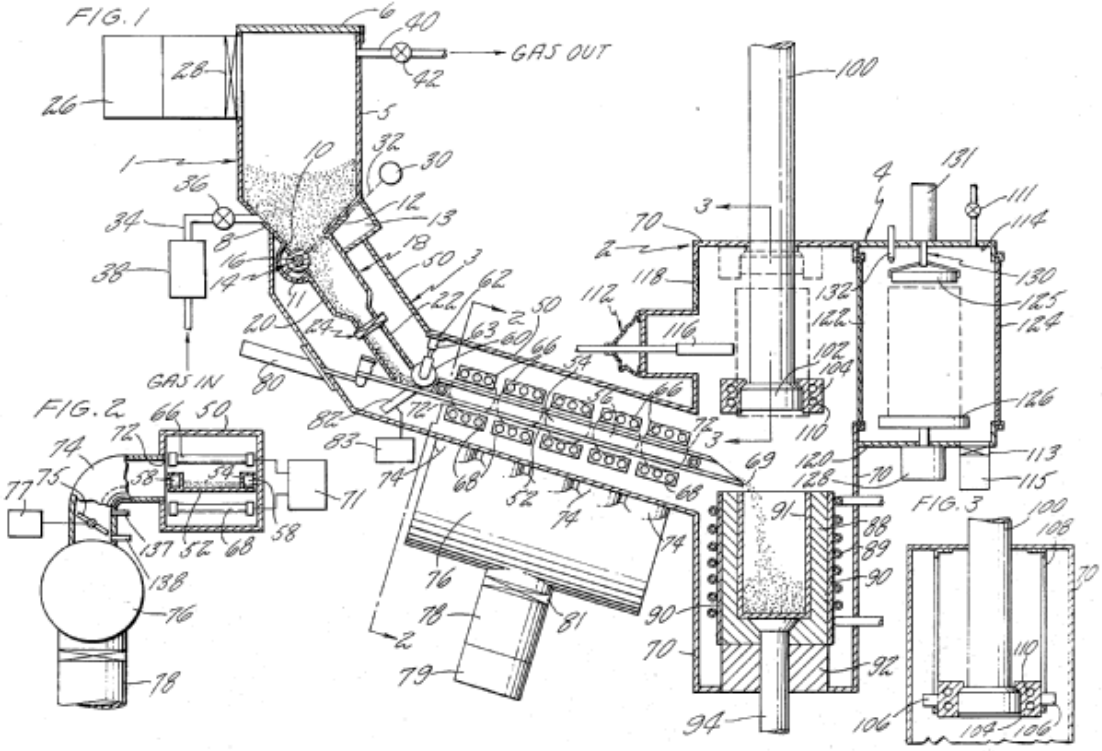

B30B 15/0023

{Drive arrangements for movable carriers, e.g. turntables}

Definition statement

This place covers:

Illustrative example of subject matter classified in this group:

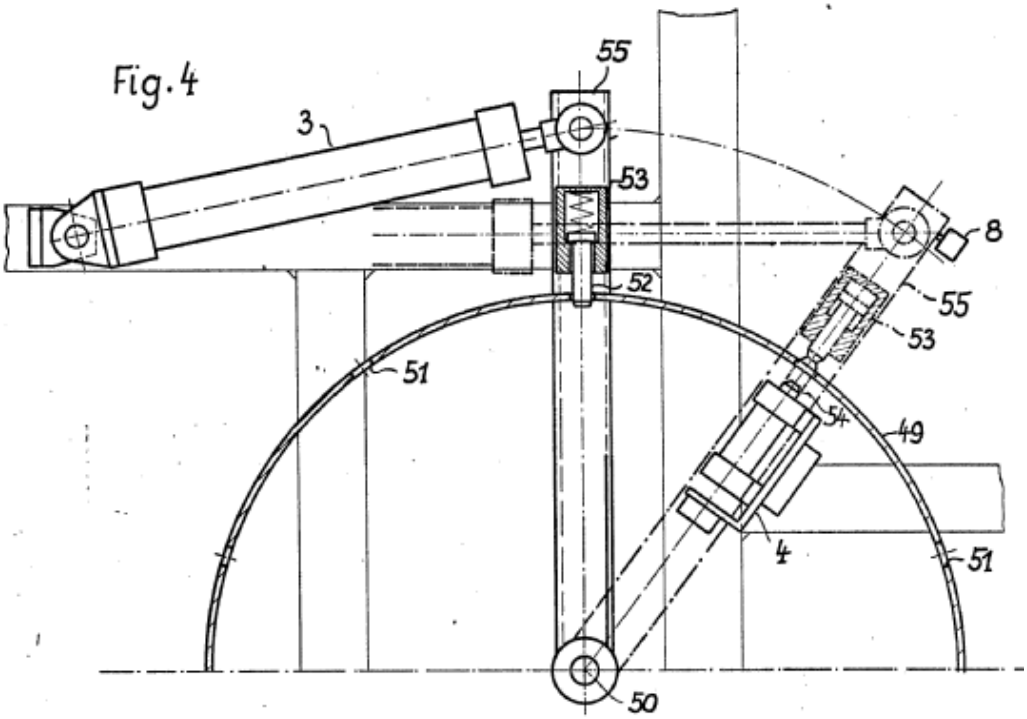

DE-A-2166391

B30B 15/0029

{means for adjusting the space between the press slide and the press table, i.e. the shut height}

Definition statement

This place covers:

Illustrative example of subject matter classified in this group:

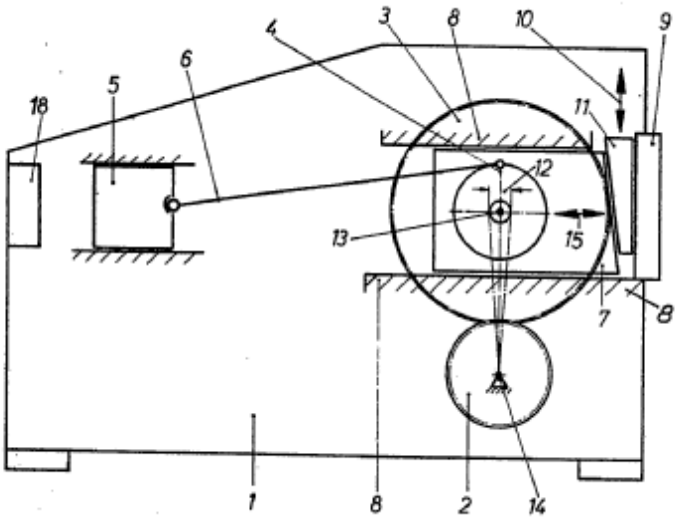

GB-A-1398048

B30B 15/0035

{using an adjustable connection between the press drive means and the press slide}

Definition statement

This place covers:

Illustrative example of subject matter classified in this group:

US-A-5287728

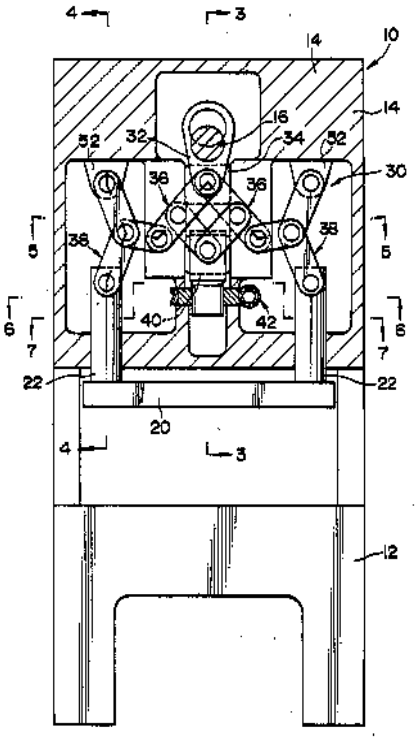

B30B 15/0041

{Control arrangements therefor}

Definition statement

This place covers:

Illustrative example of subject matter classified in this group:

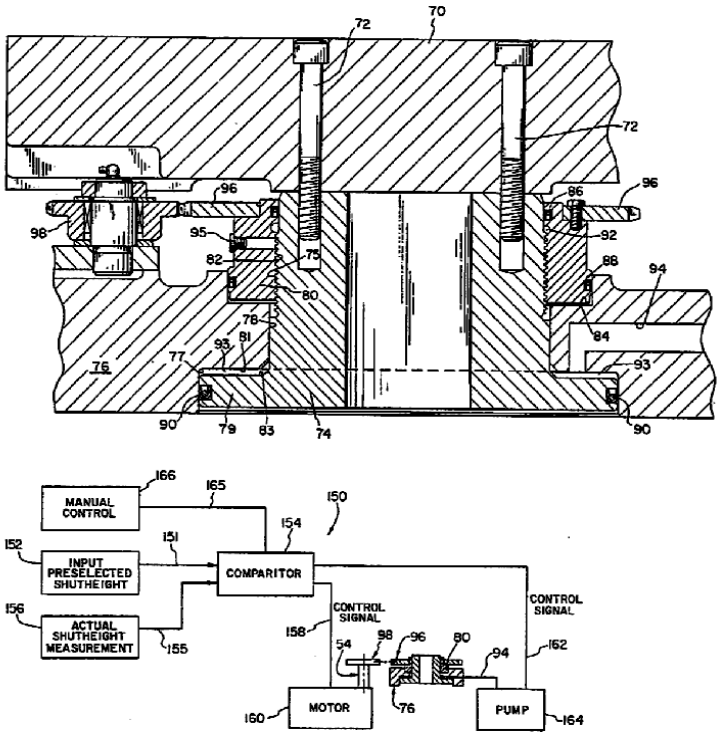

US-A-5456165

B30B 15/0047

{releasing means for jammed presses}

Definition statement

This place covers:

Illustrative example of subject matter classified in this group:

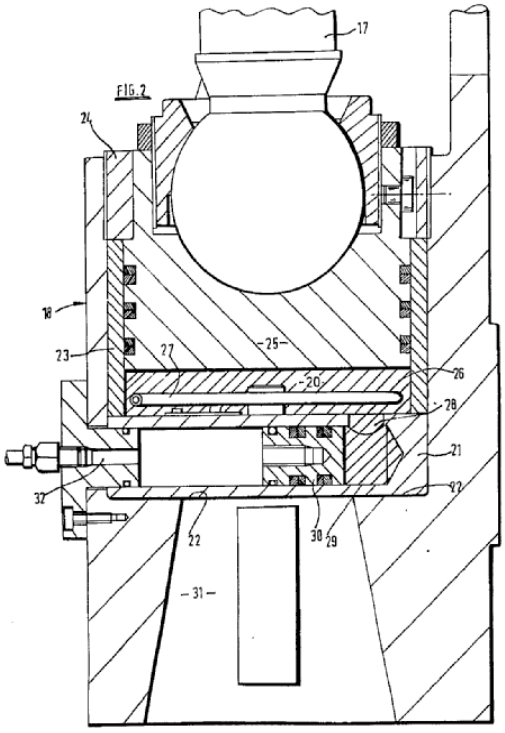

GB-A-2032312

B30B 15/0052

{for fluid driven presses}

Definition statement

This place covers:

Illustrative example of subject matter classified in this group:

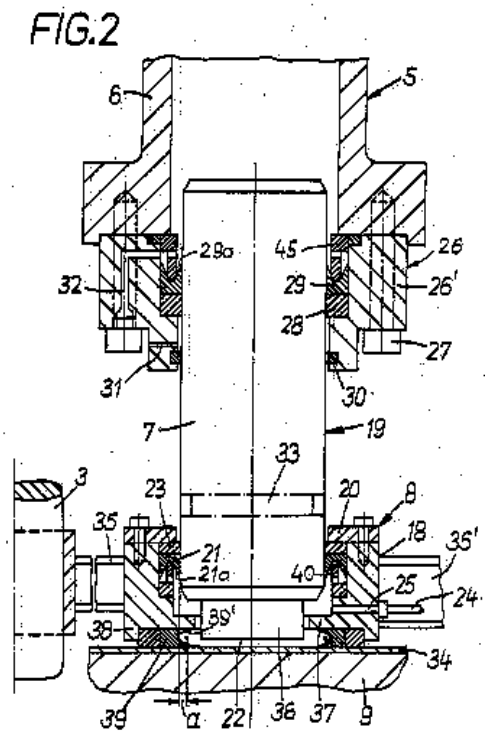

US-A-4954068

B30B 15/0058

{Inclinable presses}

Definition statement

This place covers:

Illustrative example of subject matter classified in this group:

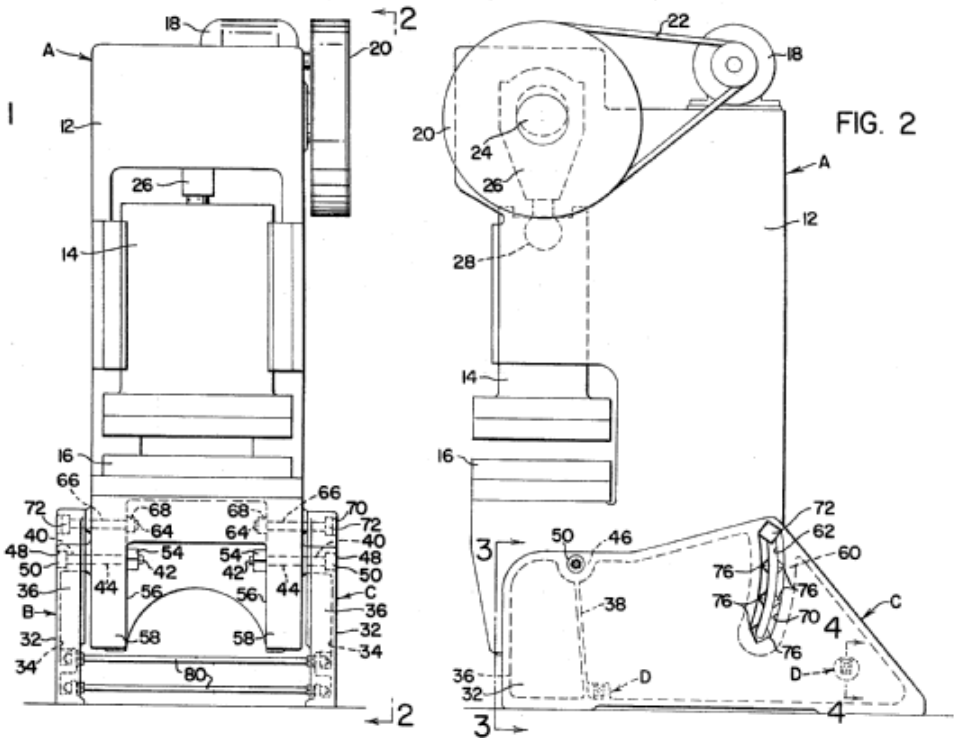

US-A-3665847

B30B 15/0064

{Counterbalancing means for movable press elements}

Definition statement

This place covers:

Illustrative example of subject matter classified in this group:

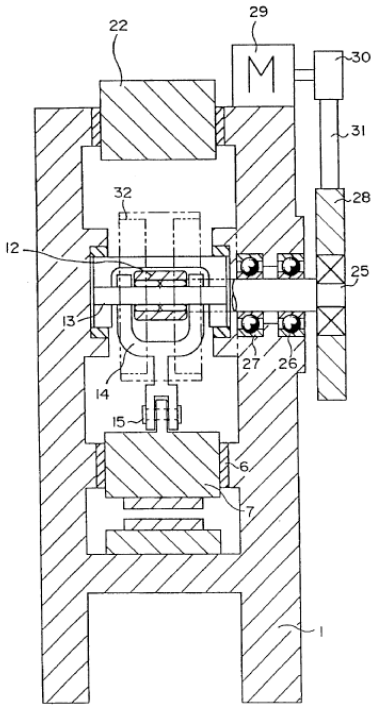

US-A-5467706

B30B 15/007

{Means for maintaining the press table, the press platen or the press ram against tilting or deflection}

Definition statement

This place covers:

Illustrative example of subject matter classified in this group:

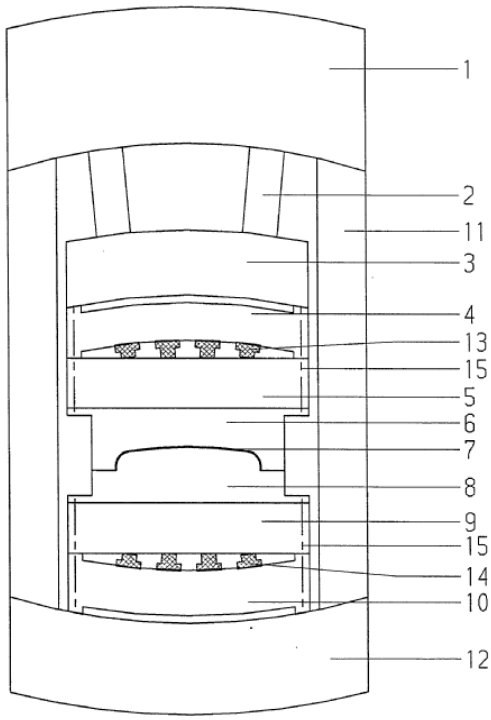

DE-A-4415577

B30B 15/0076

{Noise or vibration isolation means}

Definition statement

This place covers:

Illustrative example of subject matter classified in this group:

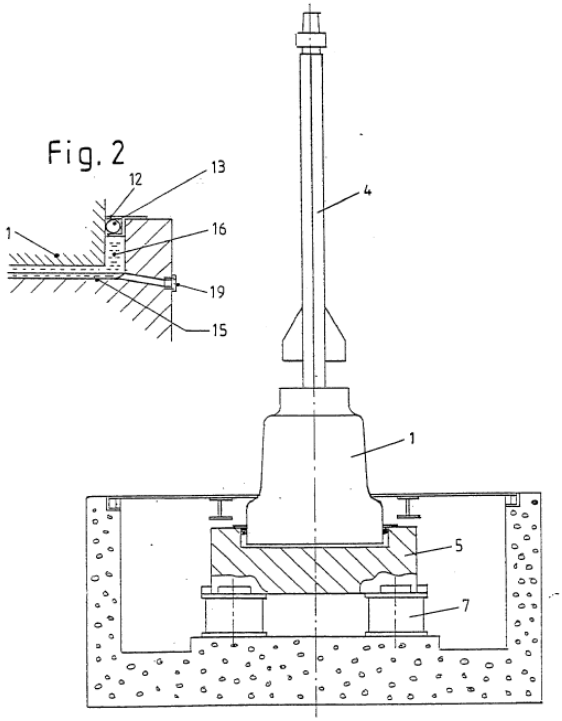

DE-A-19526895

B30B 15/0082

{Dust eliminating means; Mould or press ram cleaning means}

Definition statement

This place covers:

Illustrative example of subject matter classified in this group:

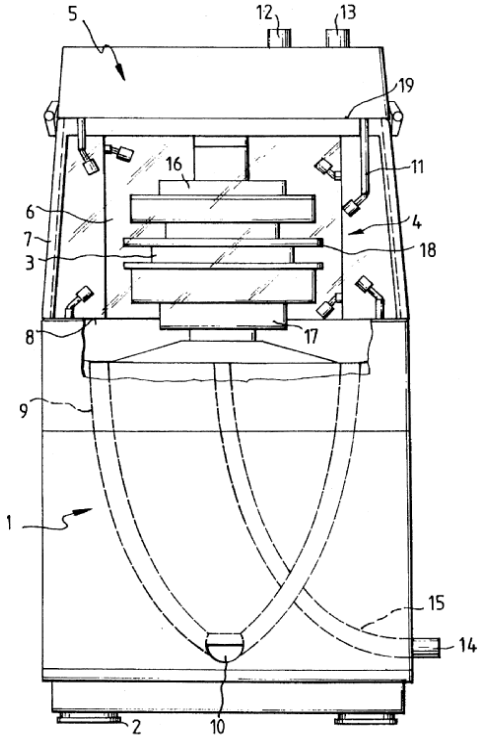

US-A-5536331

B30B 15/0088

{Lubricating means (B30B 15/0011 takes precedence)}

Definition statement

This place covers:

Illustrative example of subject matter classified in this group:

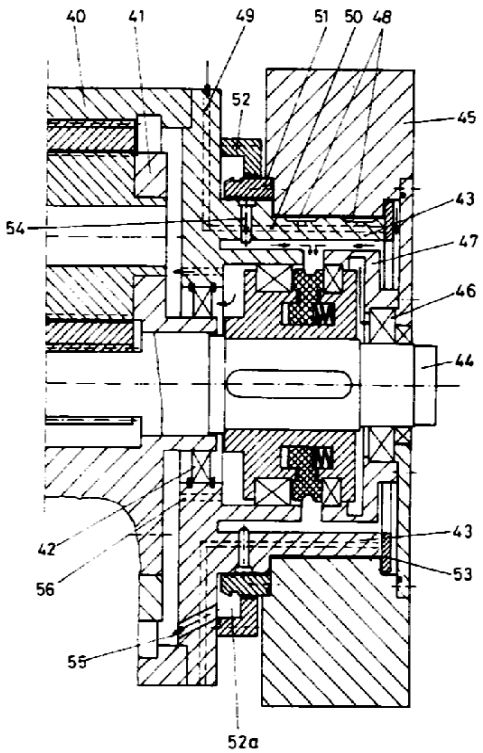

DE-A-4234905

B30B 15/0094

{Press load monitoring means (B30B 15/281 takes precedence)}

Definition statement

This place covers:

Illustrative example of subject matter classified in this group:

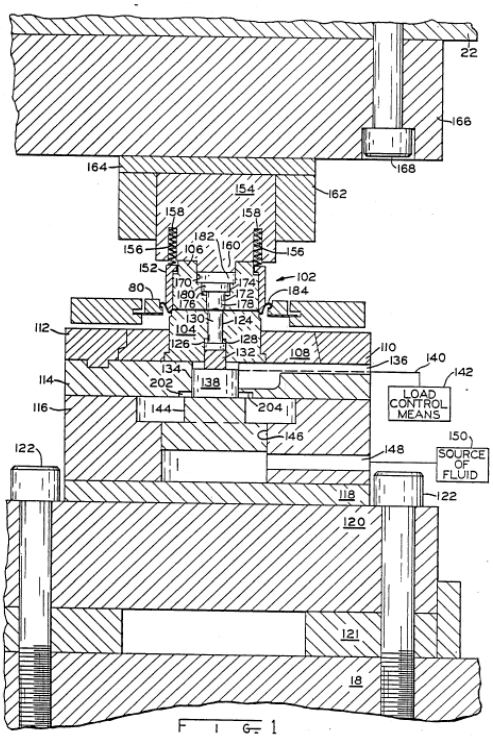

US-A-4945742

B30B 15/02

Dies; Inserts therefor; Mounting thereof; Moulds (extrusion dies B30B 11/22)

Definition statement

This place covers:

Illustrative example of subject matter classified in this group:

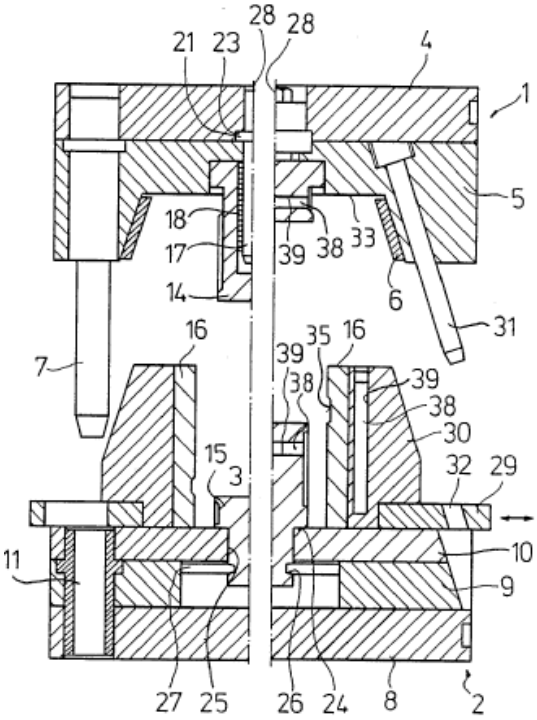

US-A-4971543

B30B 15/022

{Moulds for compacting material in powder, granular of pasta form}

Definition statement

This place covers:

Illustrative example of subject matter classified in this group:

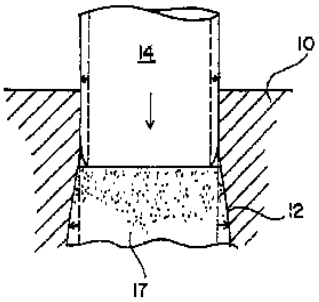

Fig 2

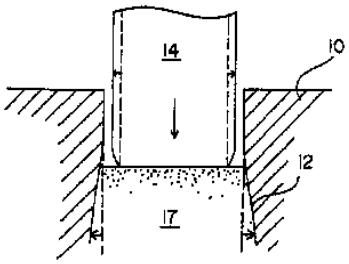

FR-A-2766743

Fig 3

B30B 15/024

{using elastic mould parts}

Definition statement

This place covers:

Illustrative example of subject matter classified in this group:

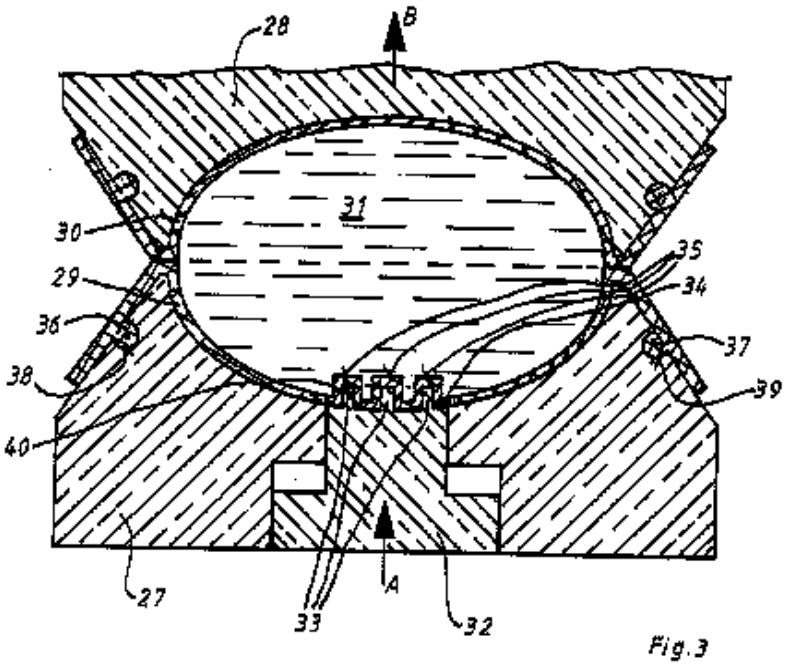

DE-A-19748370

B30B 15/026

{Mounting of dies, platens or press rams}

Definition statement

This place covers:

Illustrative example of subject matter classified in this group:

US-A-4590788

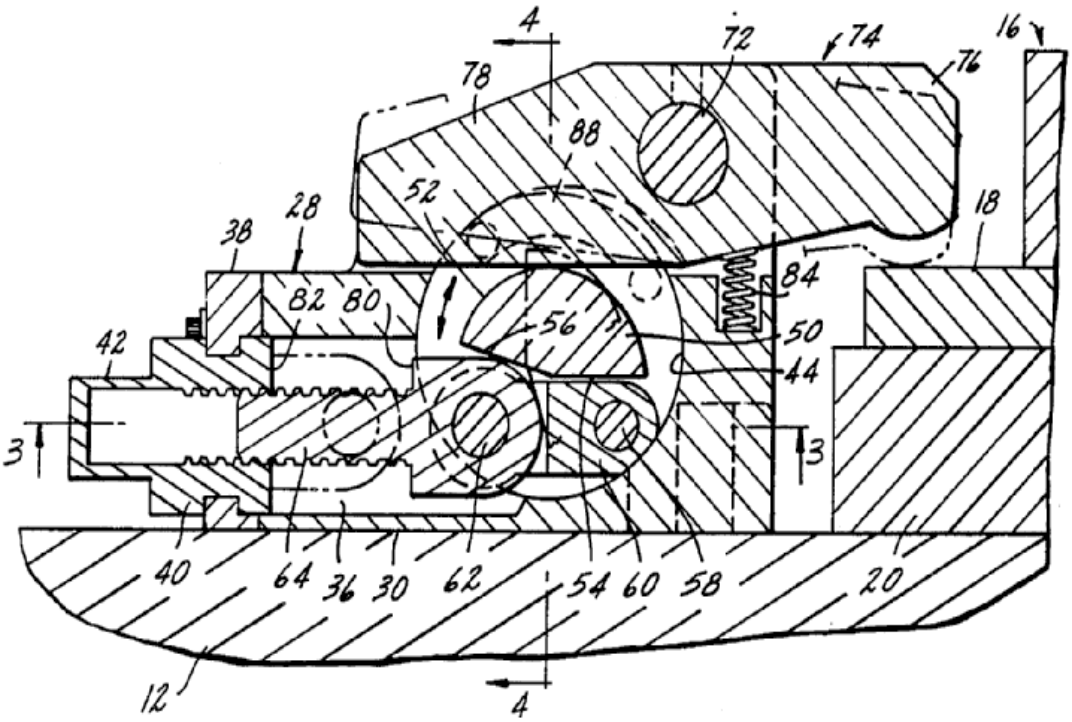

B30B 15/028

{Loading or unloading of dies, platens or press rams}

Definition statement

This place covers:

Illustrative example of subject matter classified in this group:

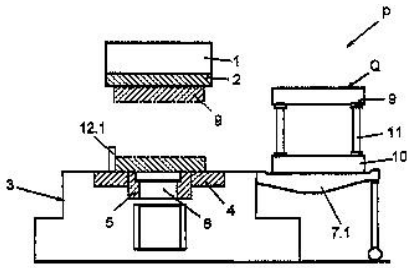

Fig. 1

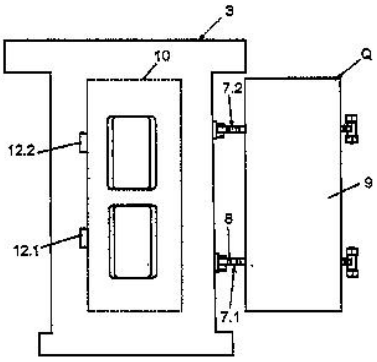

DE-A-19612242

Fig. 2

B30B 15/04

Frames; Guides

Definition statement

This place covers:

Illustrative example of subject matter classified in this group:

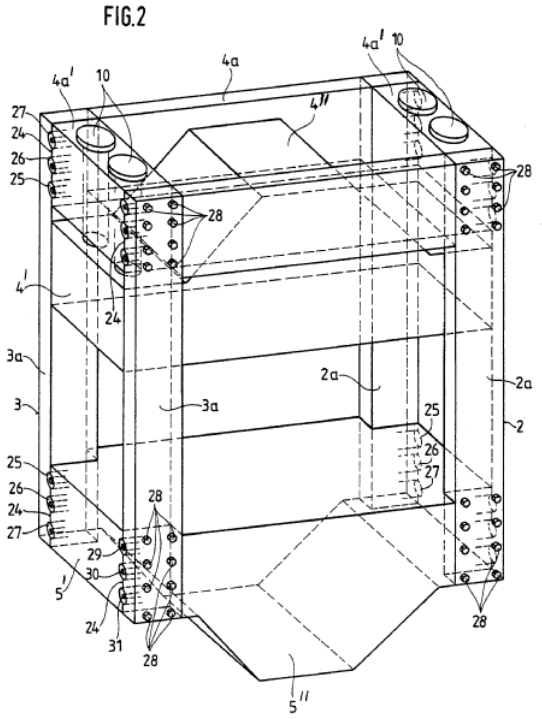

US-A-5394723

B30B 15/041

{Guides}

Definition statement

This place covers:

Illustrative example of subject matter classified in this group:

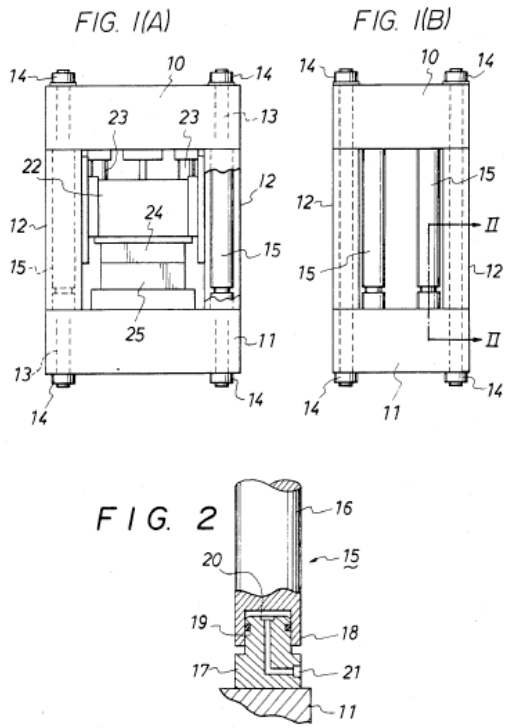

US-A-4502379

B30B 15/042

{Prestressed frames}

Definition statement

This place covers:

Illustrative example of subject matter classified in this group:

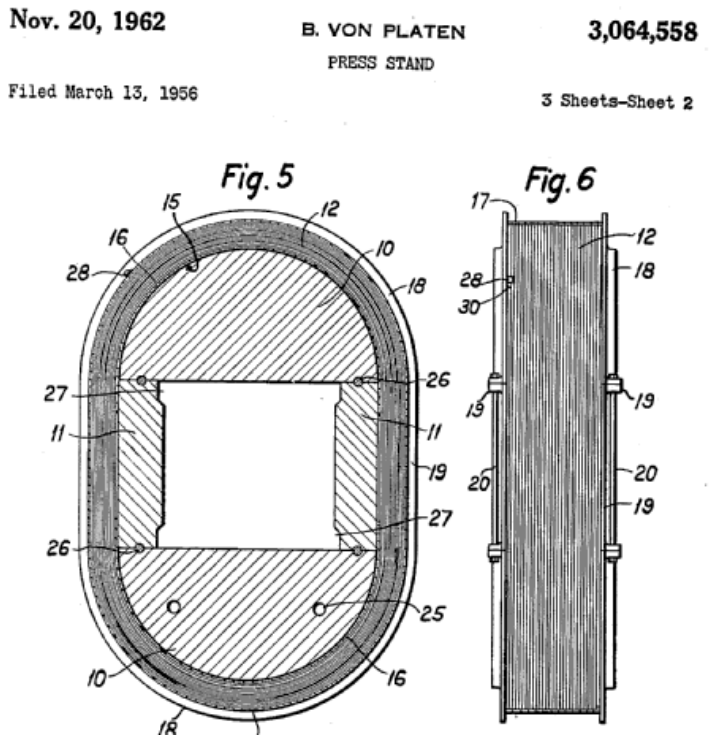

US3064558

B30B 15/044

{Means preventing deflection of the frame, especially for C-frames}

Definition statement

This place covers:

Illustrative example of subject matter classified in this group:

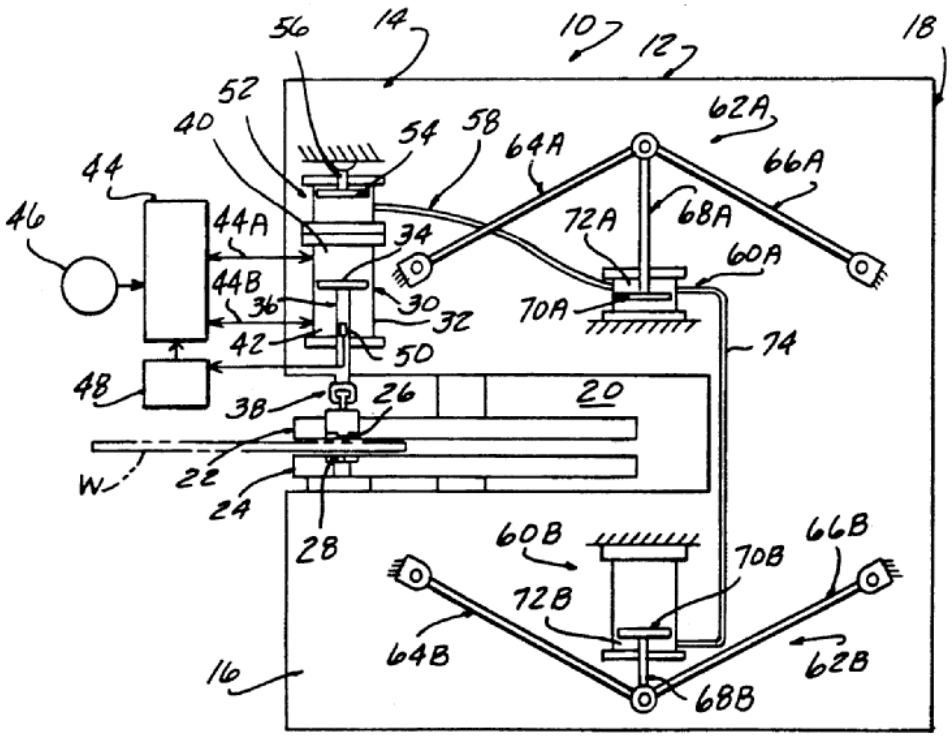

US-A-5097734

B30B 15/045

{Mountings of press columns}

Definition statement

This place covers:

Illustrative example of subject matter classified in this group:

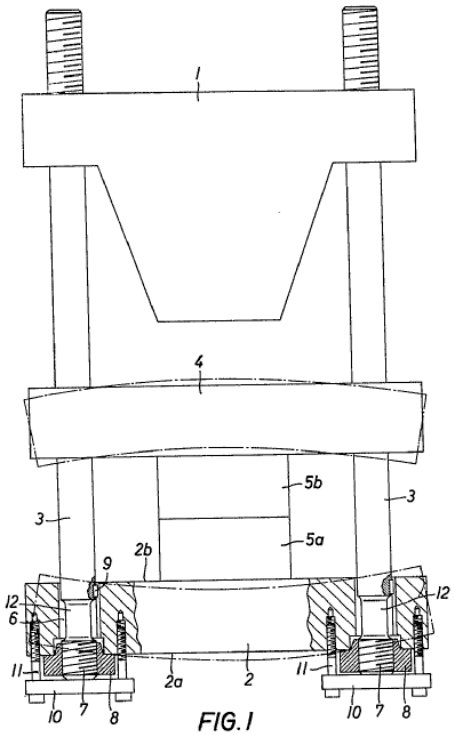

GB-A-1245853

B30B 15/047

{C-shaped frames (with means for preventing deflection B30B 15/044)}

Definition statement

This place covers:

Illustrative example of subject matter classified in this group:

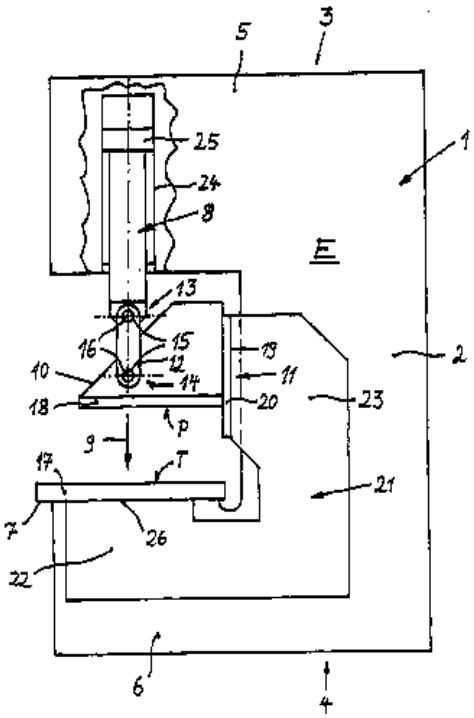

DE-A-10028346

B30B 15/048

{Laminated frame structures}

Definition statement

This place covers:

Illustrative example of subject matter classified in this group:

EP-A-1338410

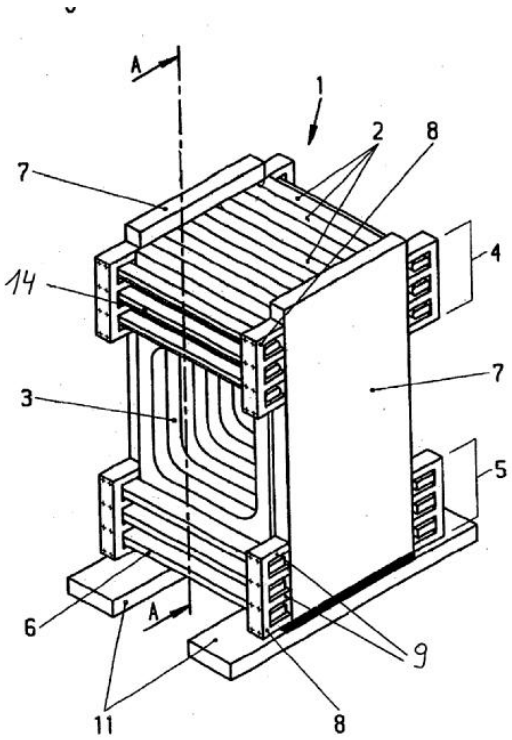

B30B 15/06

Platens or press rams

Definition statement

This place covers:

Illustrative example of subject matter classified in this group:

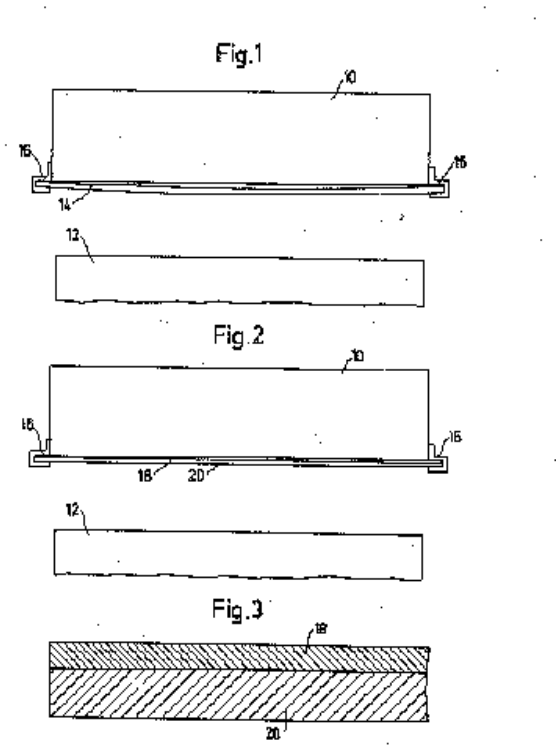

US-A-3552306

B30B 15/061

{Cushion plates}

Definition statement

This place covers:

Illustrative example of subject matter classified in this group:

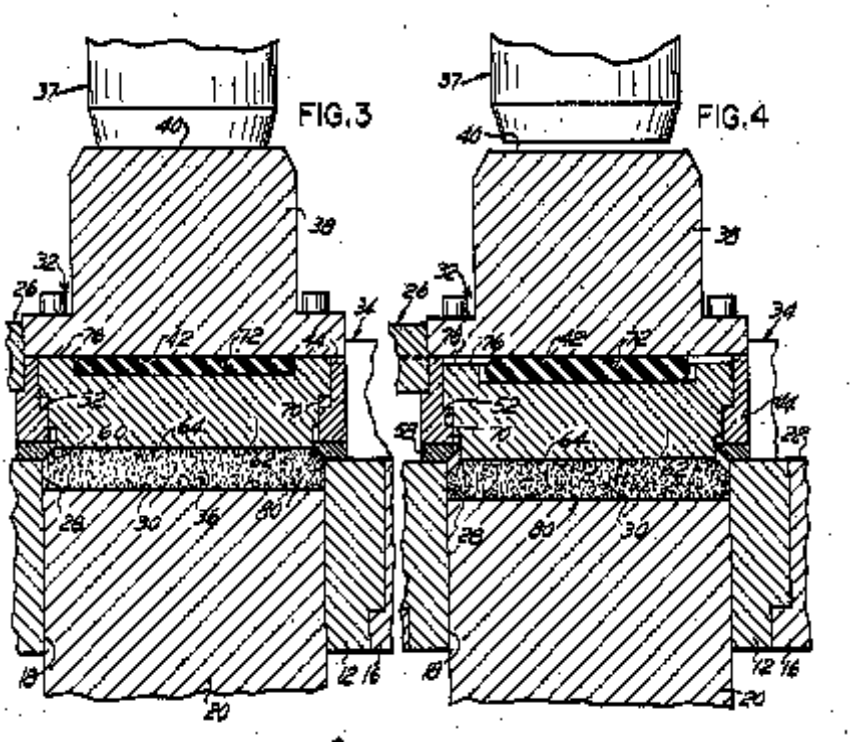

US-A-4401614

References

Limiting references

This place does not cover:

Cushioning arrangements utilized for absorbing the force from upper die so that the blank holder is moved downwardly in a controlled manner	B21D 24/02

B30B 15/062

{Press plates}

Definition statement

This place covers:

Illustrative example of subject matter classified in this group:

DE-A-3135006

Fig.1

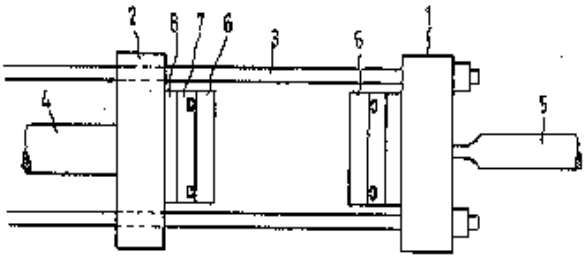

Fig.2

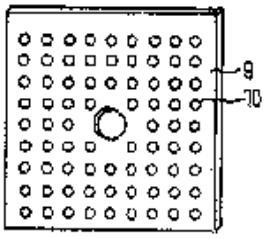

B30B 15/064

{with heating or cooling means}

Definition statement

This place covers:

Illustrative example of subject matter classified in this group:

EP-A-1293271

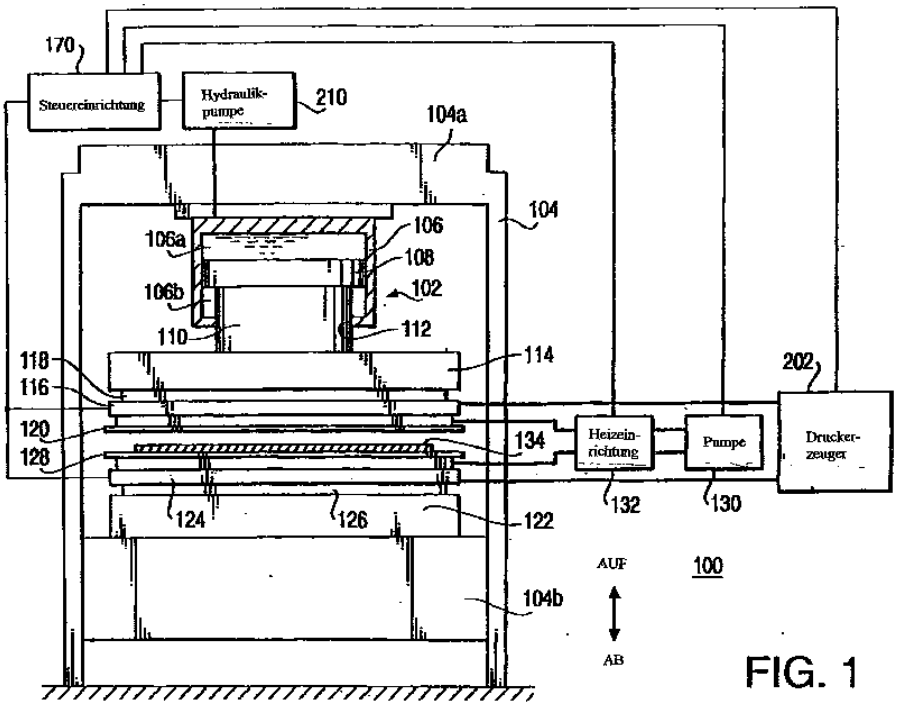

FIG. 1

B30B 15/065

{Press rams}

Definition statement

This place covers:

Illustrative example of subject matter classified in this group:

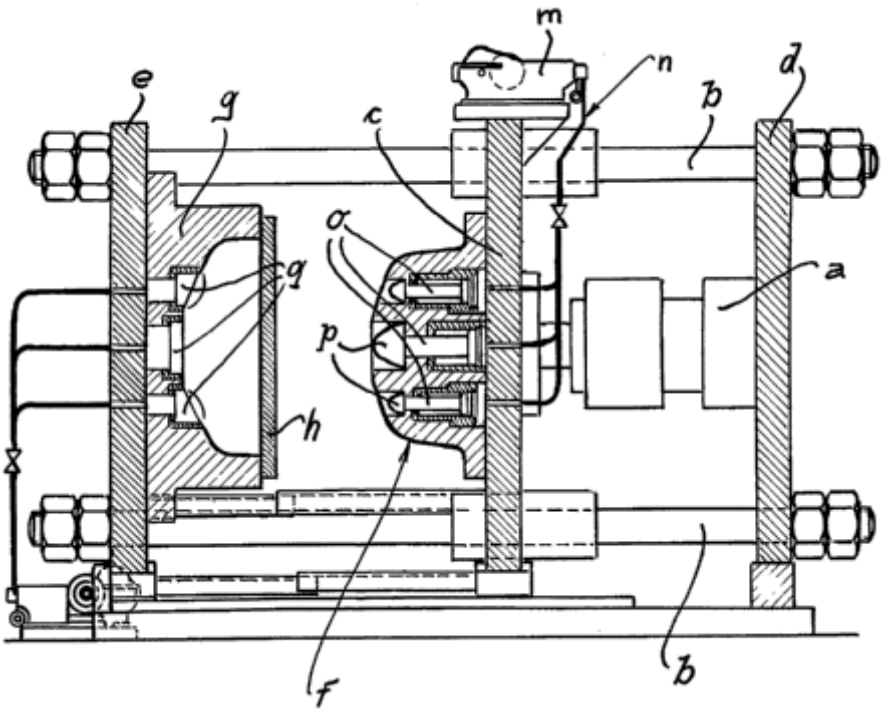

DE-B-1134956

B30B 15/067

{with means for equalizing the pressure exerted by a plurality of press rams}

Definition statement

This place covers:

Illustrative example of subject matter classified in this group:

US-A-3890413

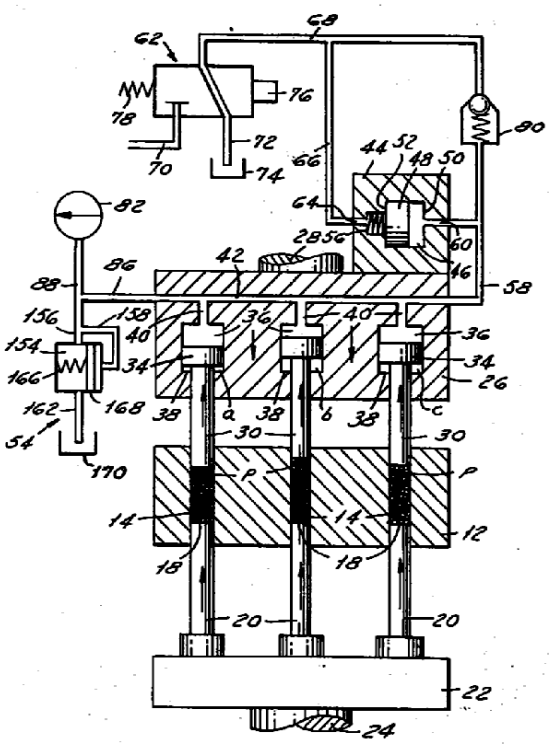
62
68
76
78
72
70
74
66
44
52
48
50
90
82
64
28
56
60
42
46
86
88
58
156
158
40
36
40
36
154
34
34
166
26
168
38
a
38
b
38
c
162
30
30
54
170
P
P
14
14
12
18
18
20
20
22
24

B30B 15/068

{Drive connections, e.g. pivotal}

Definition statement

This place covers:

Illustrative example of subject matter classified in this group:

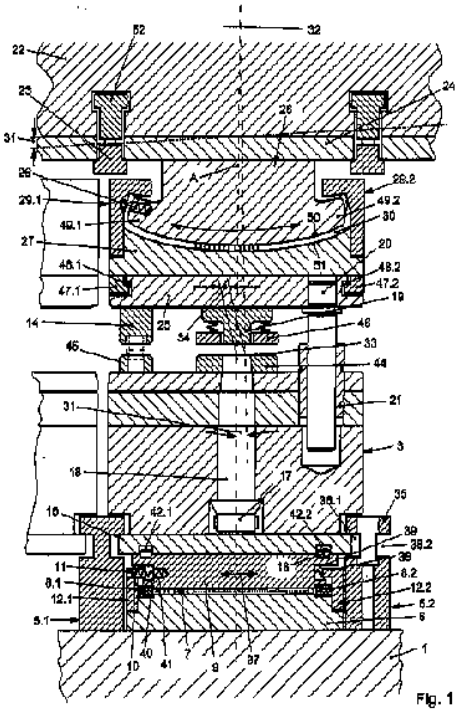

DE-A-102005007215

B30B 15/08

Accessory tools, e.g. knives; Mountings therefor

Definition statement

This place covers:

Illustrative example of subject matter classified in this group:

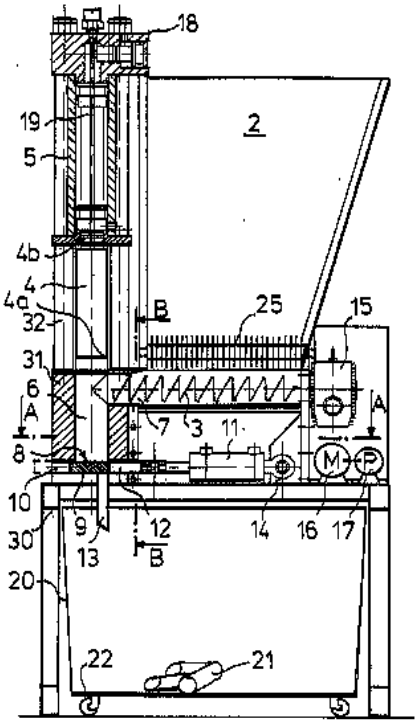

DE-A-4408138

*

FIG. 2

Brakes specially adapted for presses (brakes in general F16D)

Illustrative example of subject matter classified in this group:

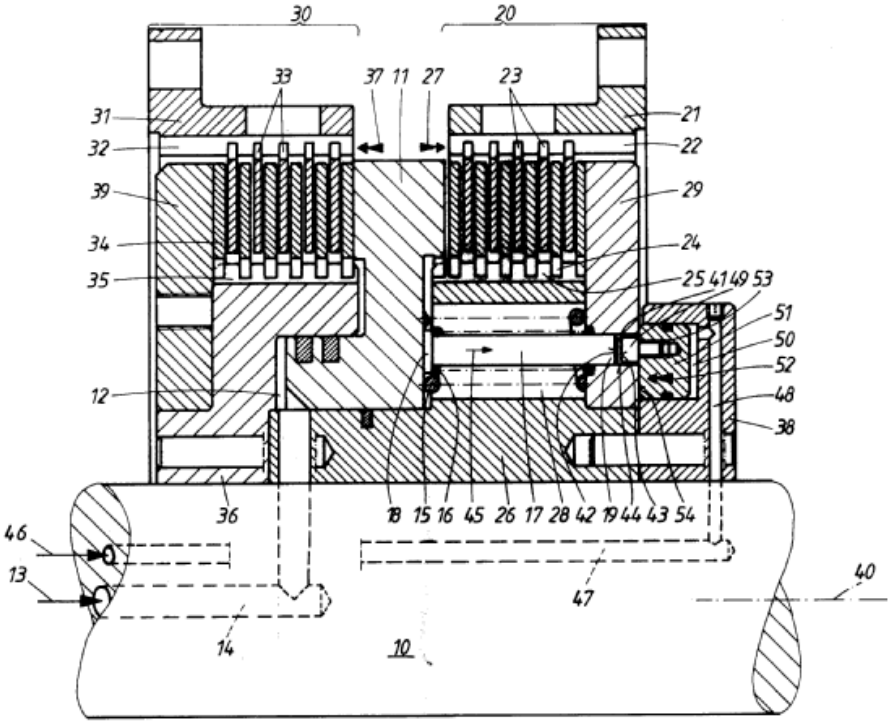

EP-A-0481206

B30B 15/10

Brakes specially adapted for presses (brakes in general F16D)

Definition statement

This place covers:

Brakes specially adapted for presses (brakes in general F16D)

EP-A-0481206

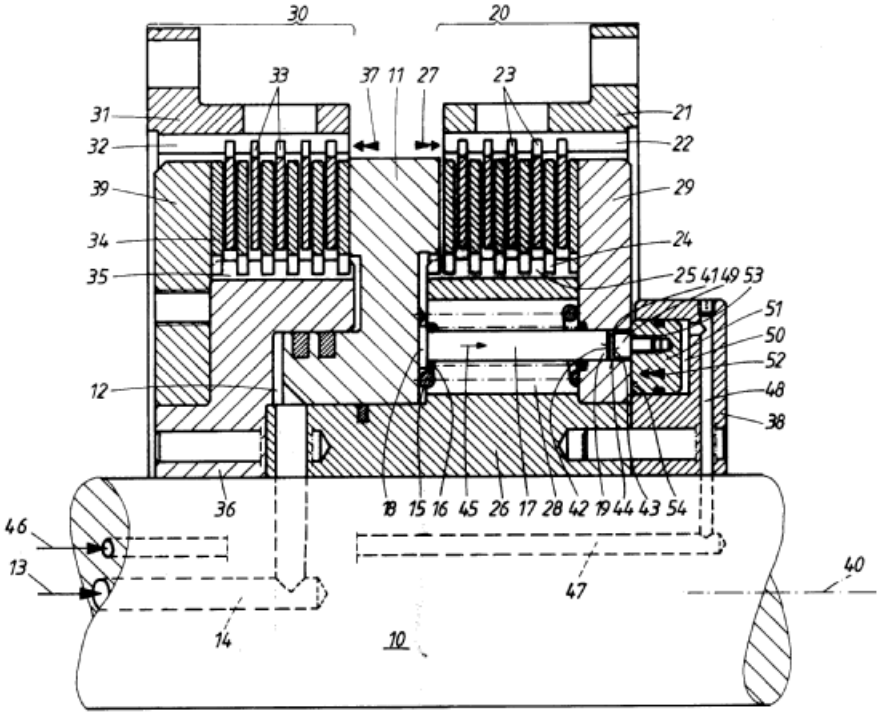
30
20
33
37
11
27
23
31
32
39
34
35
12
21
22
29
24
25
41
49
53
51
50
52
48
38
36
18
15
16
45
26
17
28
42
19
44
43
54
46
13
14
10
47
40

B30B 15/12

Clutches specially adapted for presses (clutches in general F16D)

Definition statement

This place covers:

Illustrative example of subject matter classified in this group:

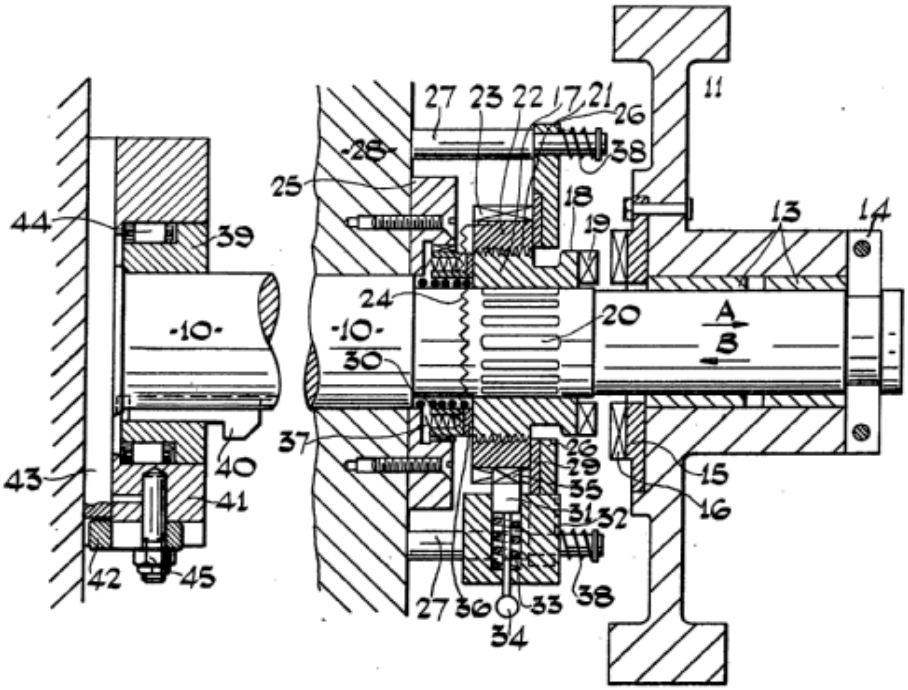

GB-A-1399346

B30B 15/14

Control arrangements for mechanically-driven presses

Definition statement

This place covers:

Illustrative example of subject matter classified in this group:

US-A-5587633

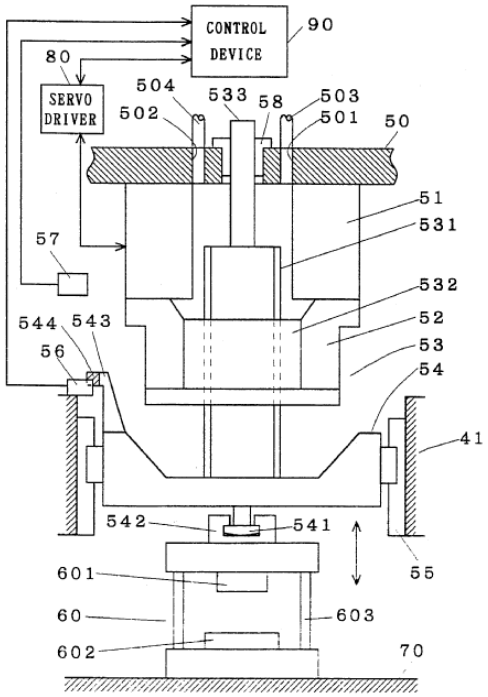

B30B 15/142

{controlling the brake or the clutch}

Definition statement

This place covers:

Illustrative example of subject matter classified in this group:

DE-A-2608691

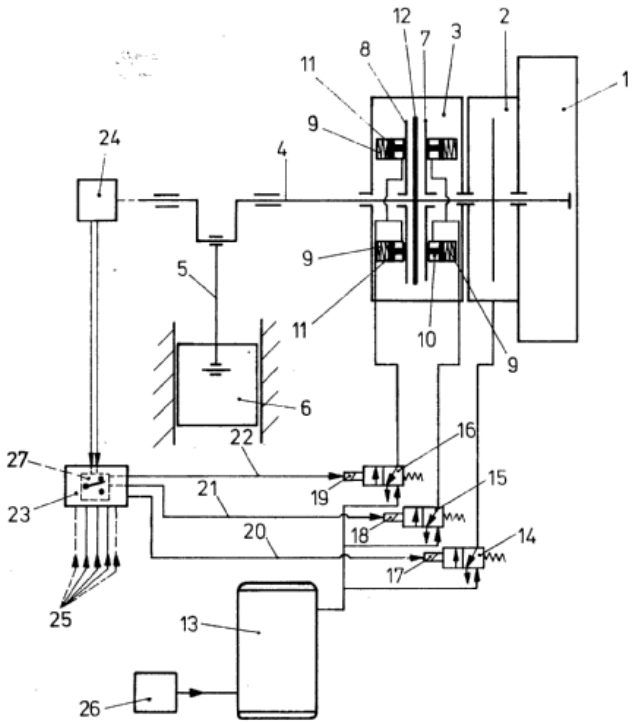

B30B 15/144

{for stopping the press shaft in a predetermined angular position}

Definition statement

This place covers:

Illustrative example of subject matter classified in this group:

FR-A-2557021

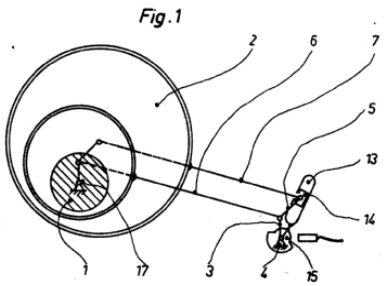

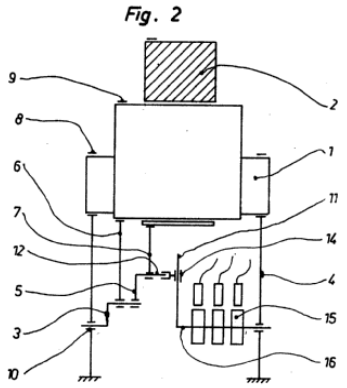

B30B 15/146

{for synchronising a line of presses}

Definition statement

This place covers:

Illustrative example of subject matter classified in this group:

US-A-4492901

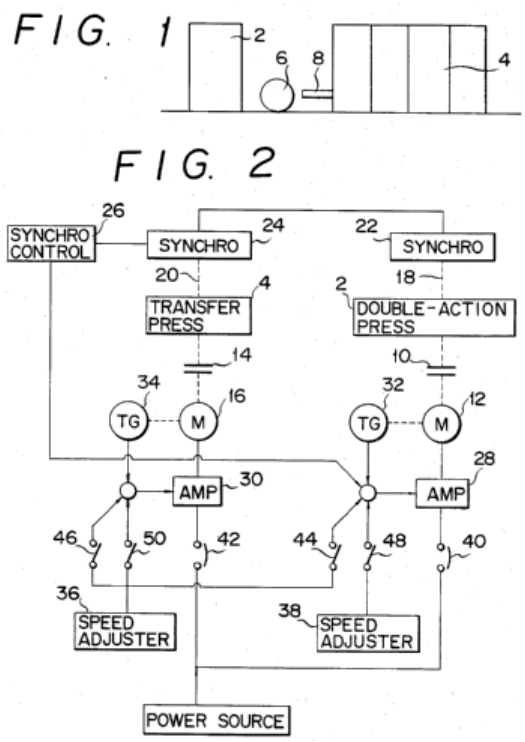

B30B 15/148

{Electrical control arrangements}

Definition statement

This place covers:

Illustrative example of subject matter classified in this group:

DE-A-4421527

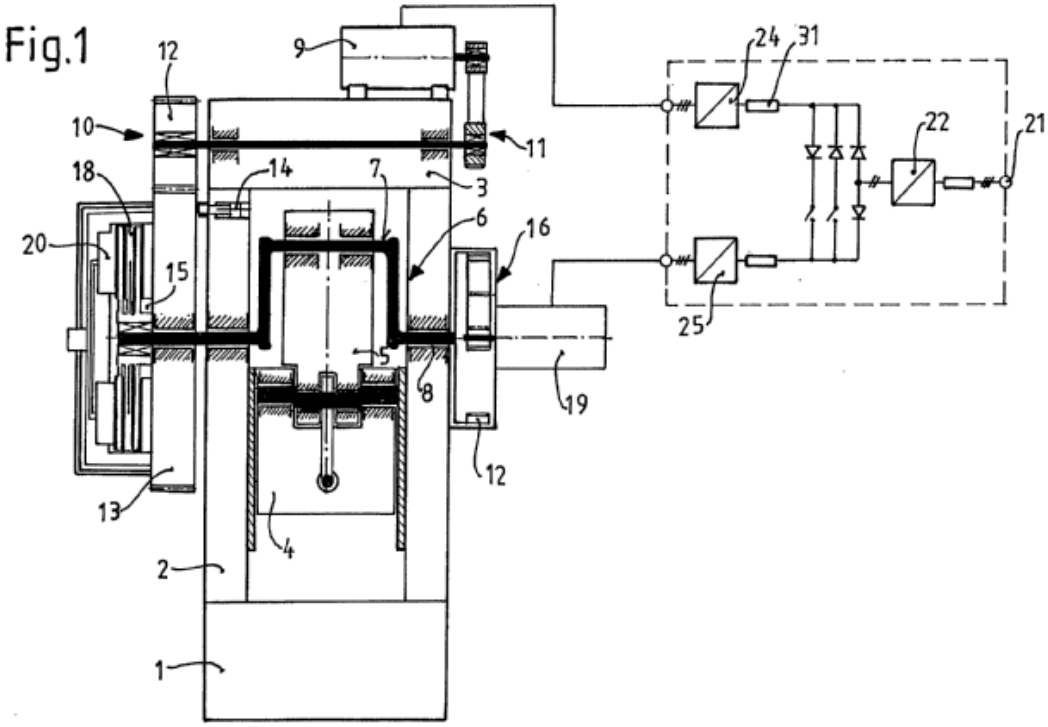

B30B 15/16

Control arrangements for fluid-driven presses (pumps per se F04; hydraulic accumulators per se F15B; valves per se F16K; control devices in general G05)

Definition statement

This place covers:

Illustrative example of subject matter classified in this group:

DE-A-102011011750

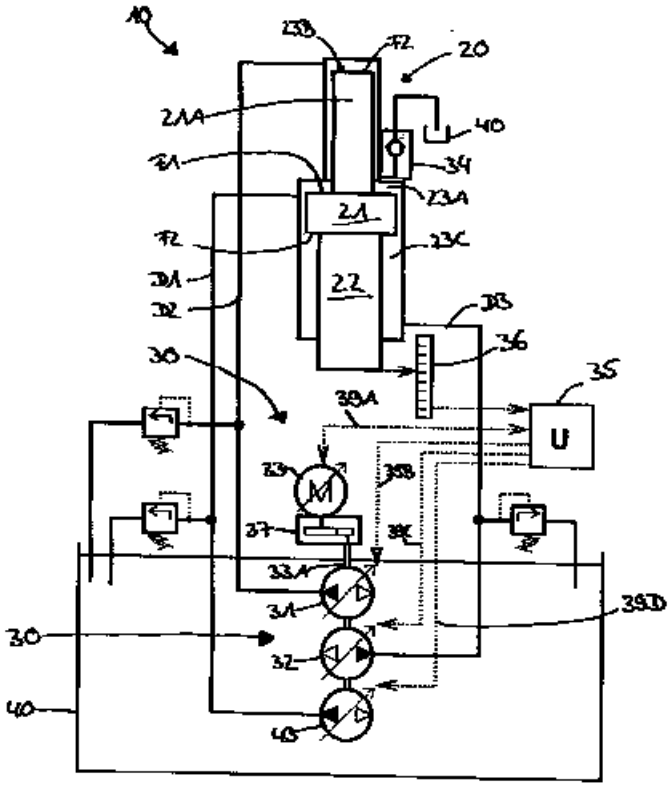

Fig. 3

B30B 15/161

{controlling the ram speed and ram pressure, e.g. fast approach speed at low pressure, low pressing speed at high pressure}

Definition statement

This place covers:

Illustrative example of subject matter classified in this group:

WO-A-0166320

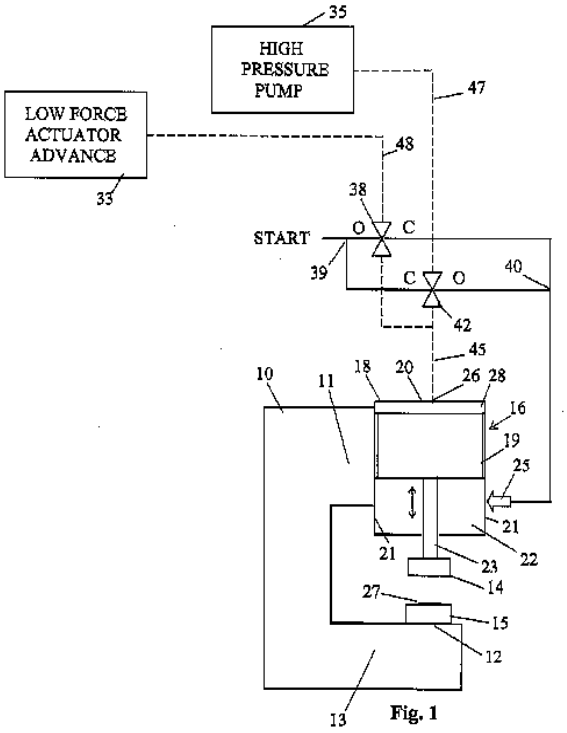

Fig. 1

B30B 15/163

{for accumulator-driven presses}

Definition statement

This place covers:

Illustrative example of subject matter classified in this group:

US-A-4022096

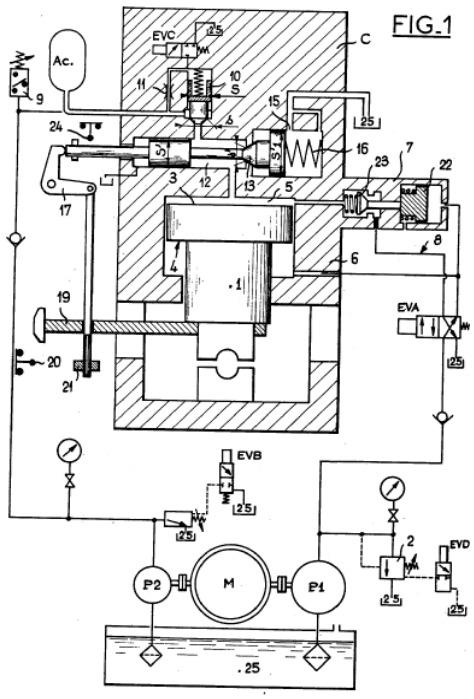

B30B 15/165

{for pneumatically-hydraulically driven presses}

Definition statement

This place covers:

Illustrative example of subject matter classified in this group:

EP-A-0285435

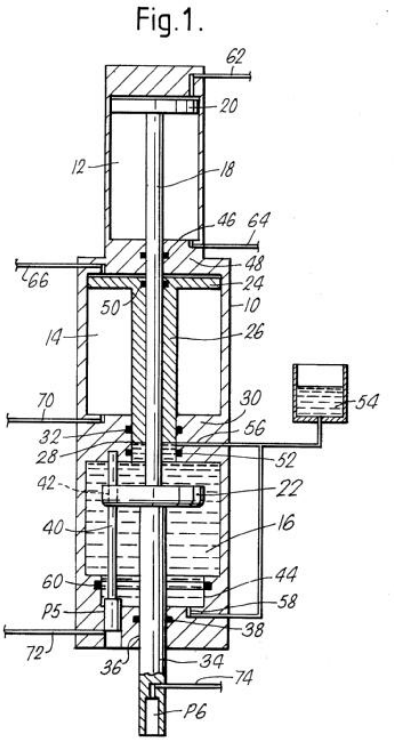

B30B 15/166

{Electrical control arrangements}

Definition statement

This place covers:

Illustrative example of subject matter classified in this group:

US-A-4458189

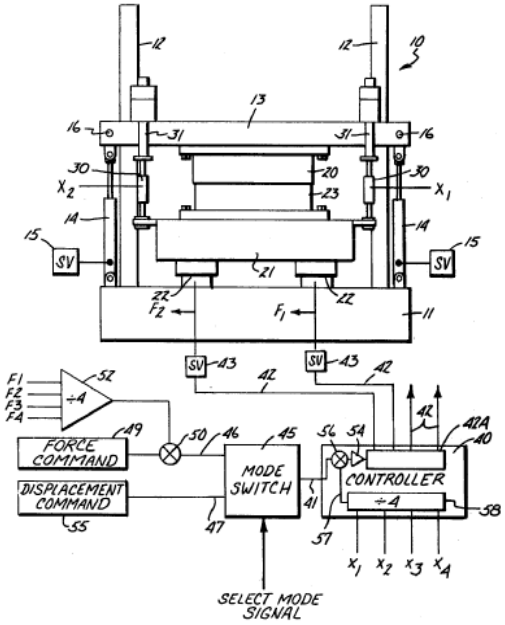

Fig.1

B30B 15/168

{for pneumatically driven presses (B30B 15/165 takes precedence)}

Definition statement

This place covers:

Illustrative example of subject matter classified in this group:

DE-A-3037926

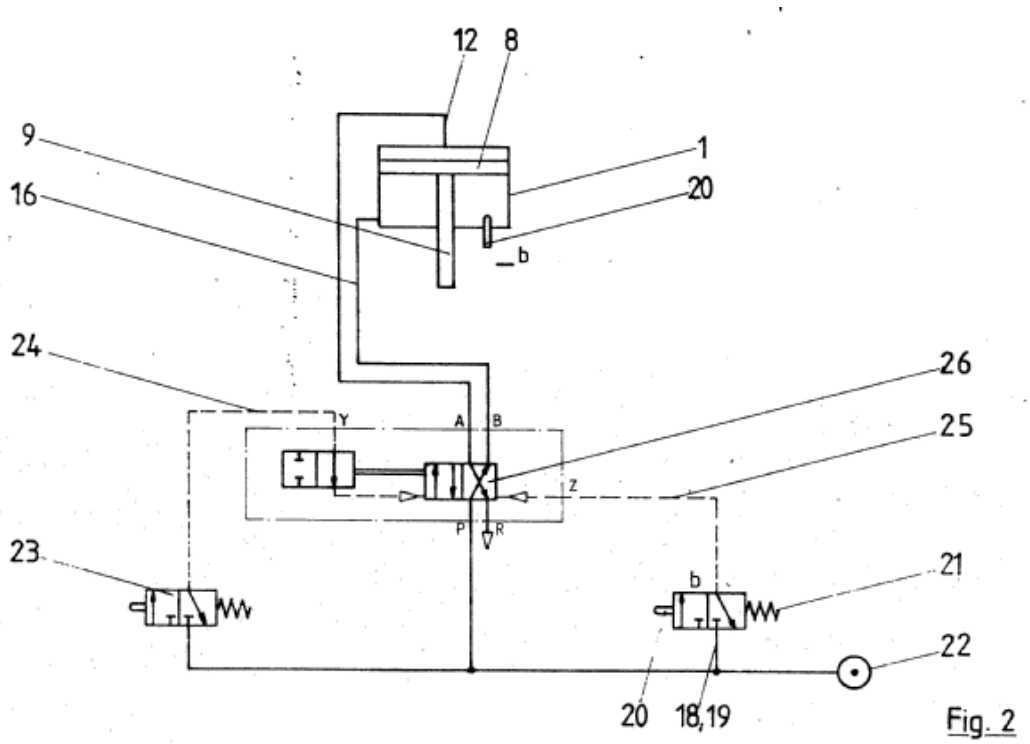

Fig. 2

B30B 15/18

controlling the reciprocating motion of the ram

Definition statement

This place covers:

Illustrative example of subject matter classified in this group:

DE-B-1427298

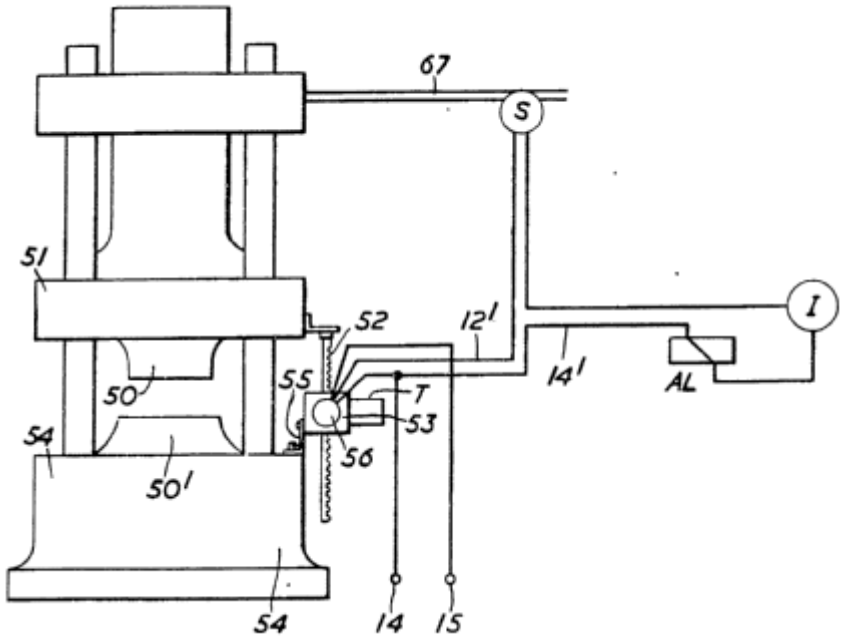

B30B 15/183

{Controlling the filling of the press cylinder during the approach stroke of the ram, e.g. prefill-valves}

Definition statement

This place covers:

Illustrative example of subject matter classified in this group:

US-A-3974764

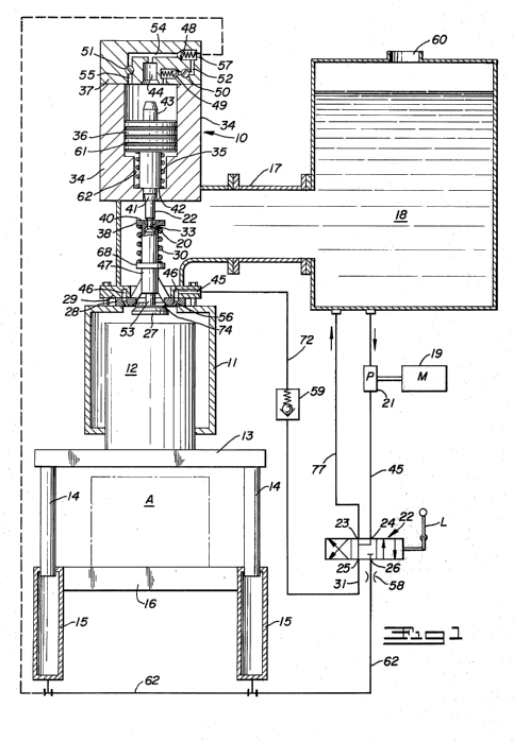

B30B 15/186

{Controlling the return movement of the ram, e.g. decompression valves}

Definition statement

This place covers:

Illustrative example of subject matter classified in this group:

US-A-2904074

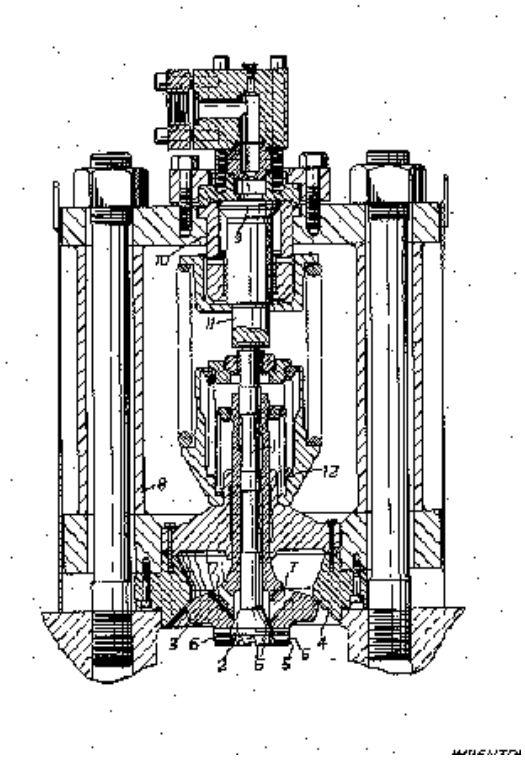

B30B 15/20

controlling the speed of the ram, e.g. the speed of the approach, pressing or return strokes

Definition statement

This place covers:

Illustrative example of subject matter classified in this group:

EP-A-0549793

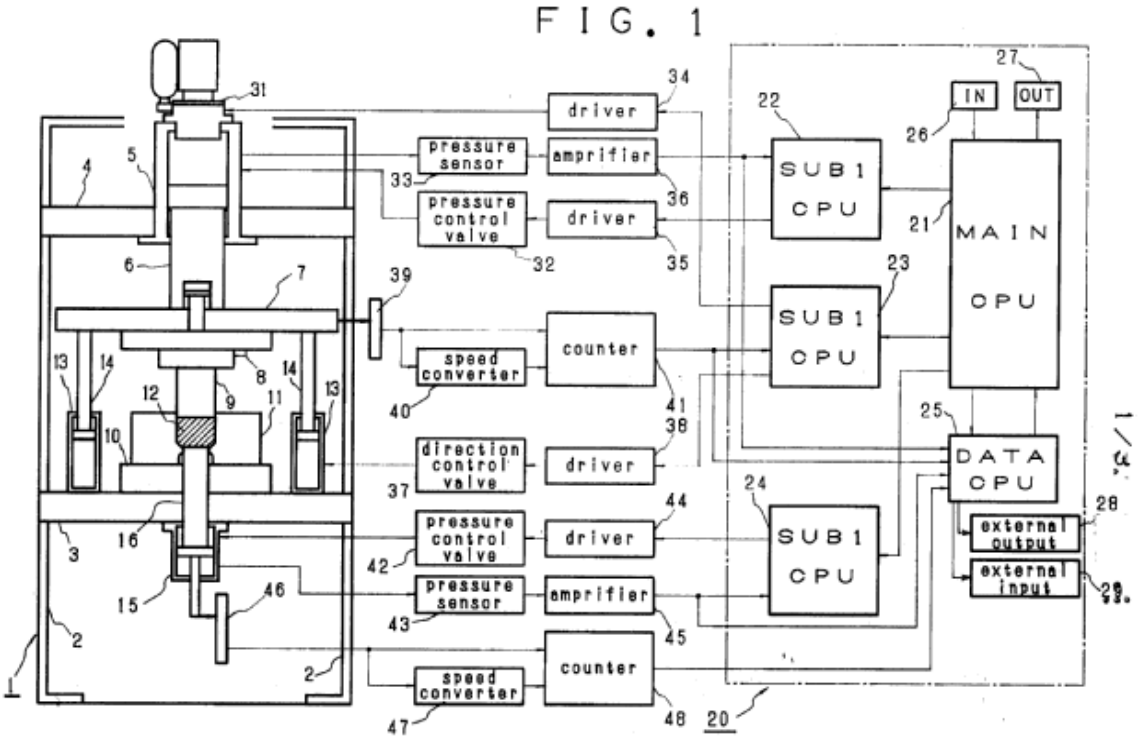

B30B 15/22

controlling the degree of pressure applied by the ram during the pressing stroke

Definition statement

This place covers:

Illustrative example of subject matter classified in this group:

US-A-5395565

FIG. 1

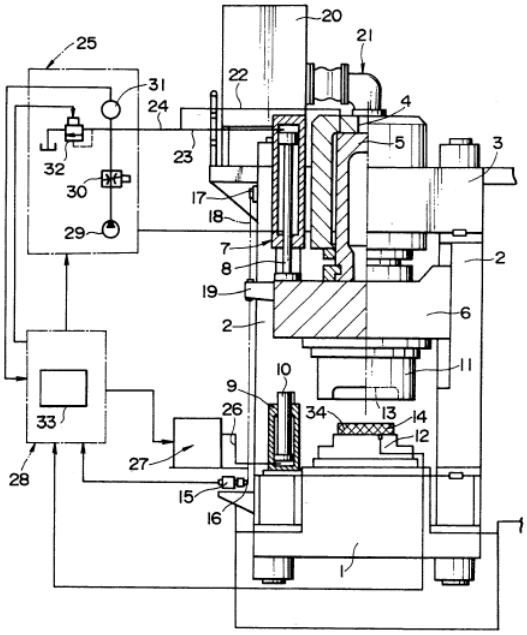

B30B 15/24

controlling the movement of a plurality of actuating members to maintain parallel movement of the platen or press beam

Definition statement

This place covers:

Illustrative example of subject matter classified in this group:

DE-A-2849578

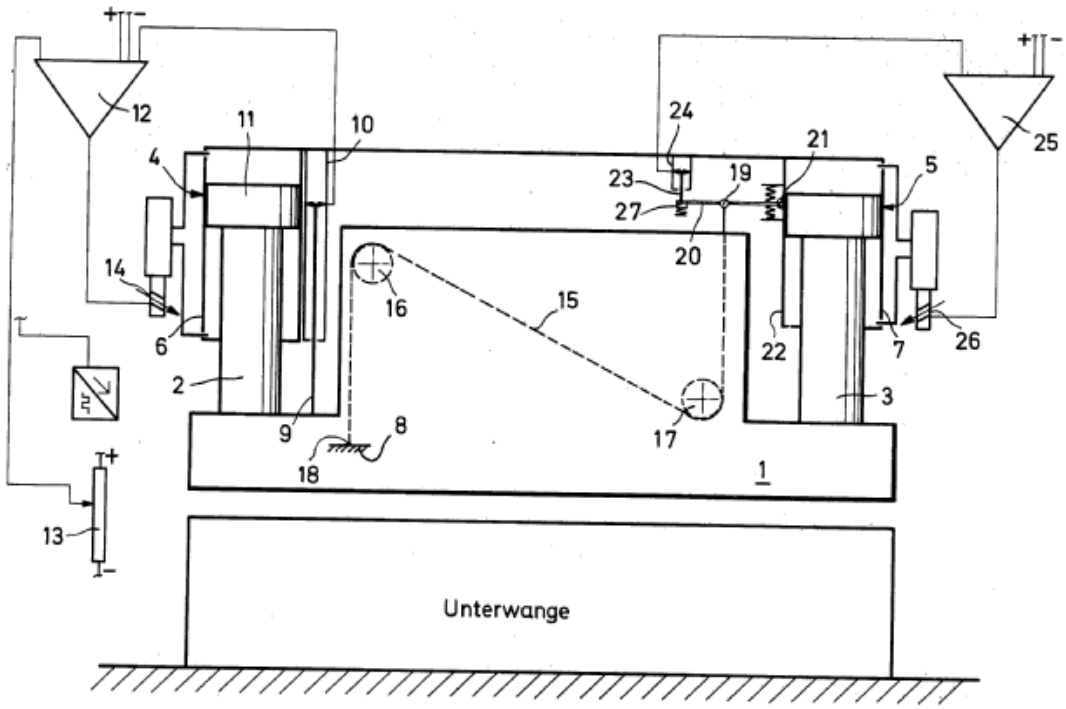

B30B 15/245

{using auxiliary cylinder and piston means as actuating members}

Definition statement

This place covers:

Illustrative example of subject matter classified in this group:

US-A-4311086

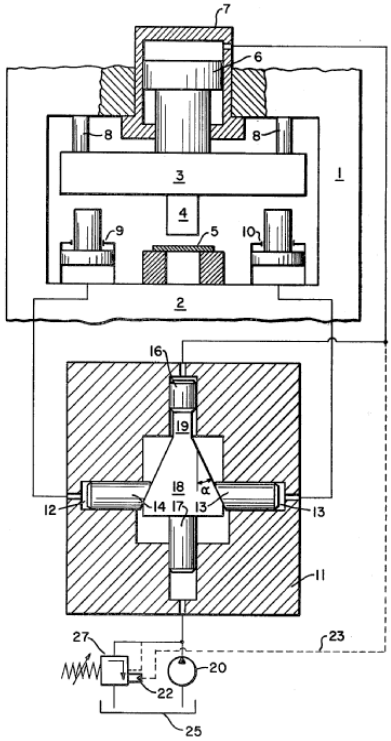

EP-A-0547305

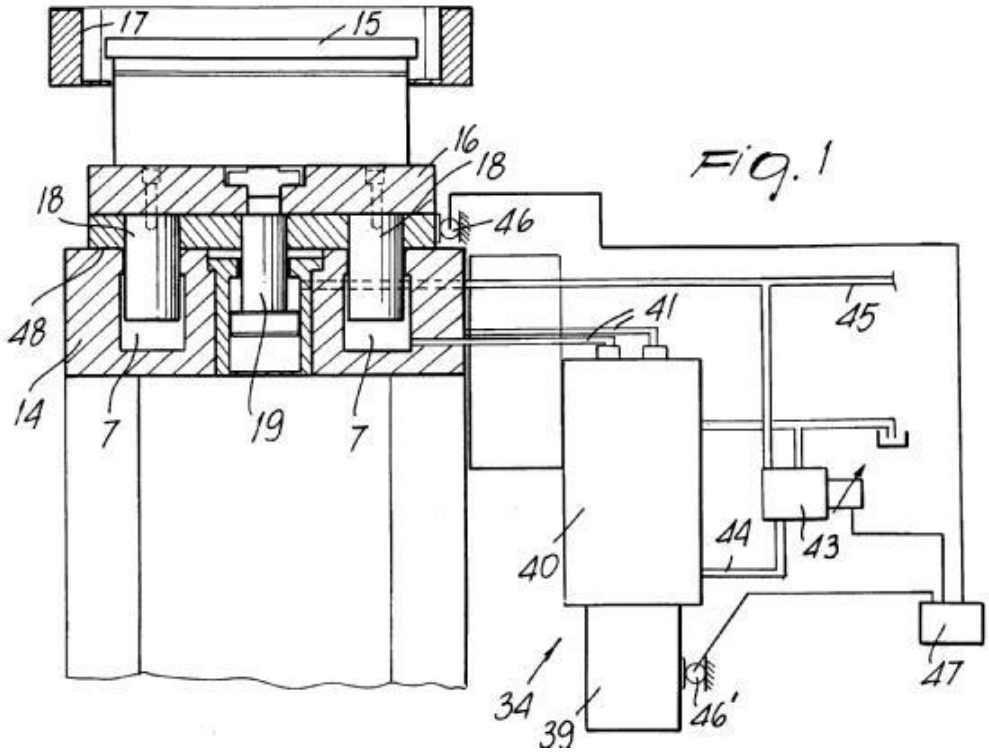

B30B 15/26

Programme control arrangements

Definition statement

This place covers:

Illustrative example of subject matter classified in this group:

US-A-5027631

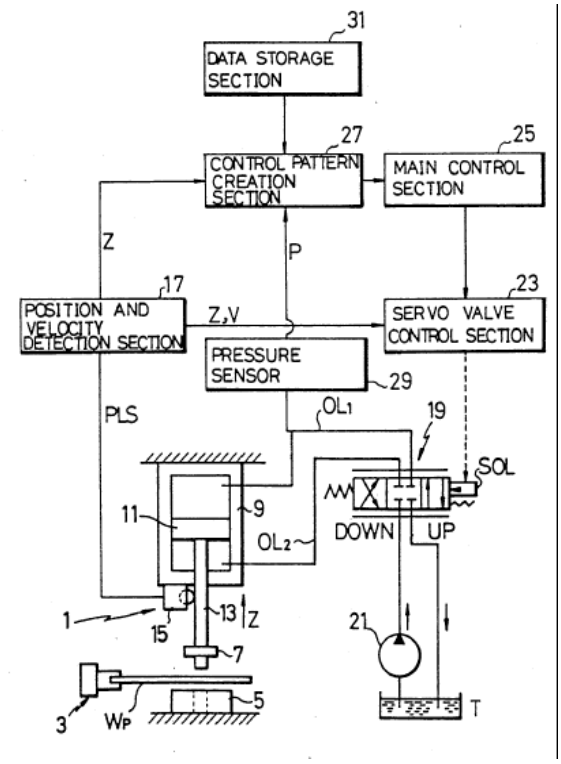

B30B 15/28

Arrangements for preventing distortion of, or damage to, presses or parts thereof

Definition statement

This place covers:

Illustrative example of subject matter classified in this group:

DE-A-19523802

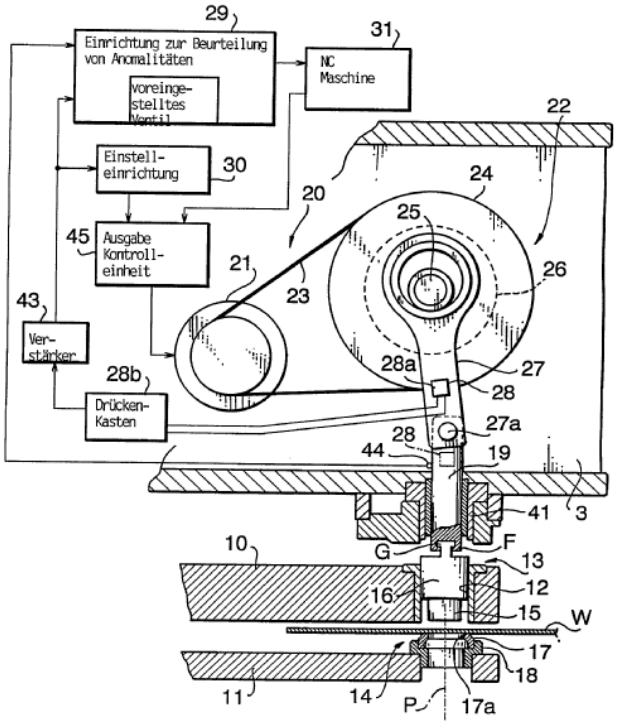

B30B 15/281

{overload limiting devices (in general F16H 35/10)}

Definition statement

This place covers:

Illustrative example of subject matter classified in this group:

US-A-4593547

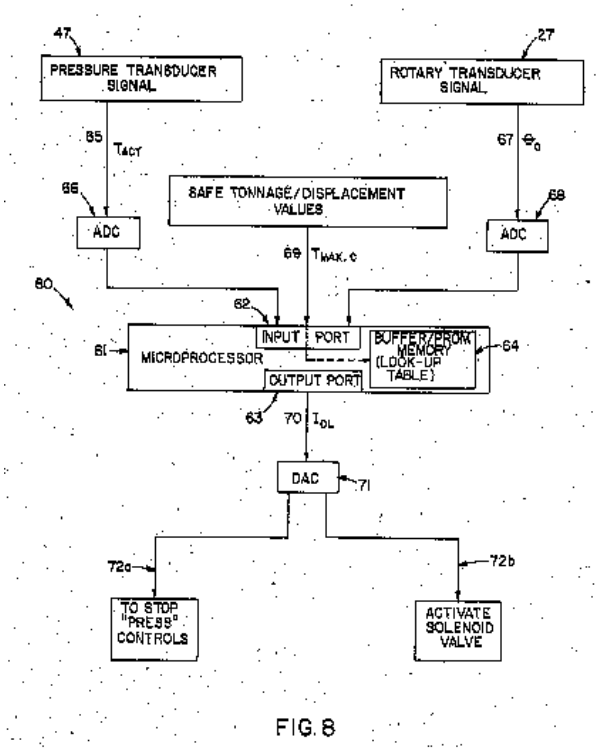

FIG. 8

B30B 15/282

{using a breakage element}

Definition statement

This place covers:

Illustrative example of subject matter classified in this group:

DE-A-102007011489

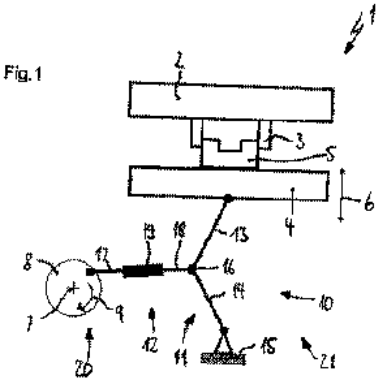

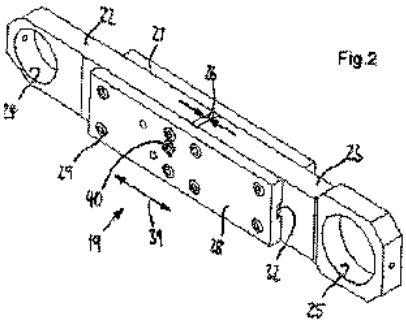

B30B 15/284

{releasing fluid from a fluid chamber subjected to overload pressure}

Definition statement

This place covers:

Illustrative example of subject matter classified in this group:

US-A-5078003

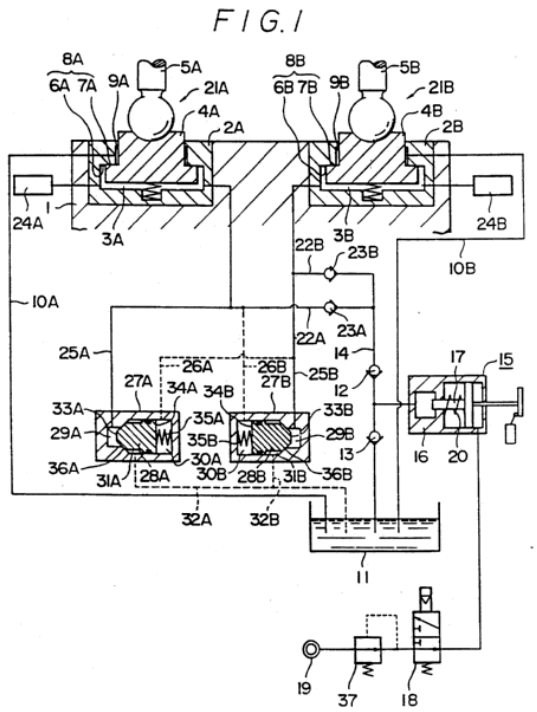

B30B 15/285

{preventing a full press stroke if there is an obstruction in the working area}

Definition statement

This place covers:

Illustrative example of subject matter classified in this group:

US-A-5064043

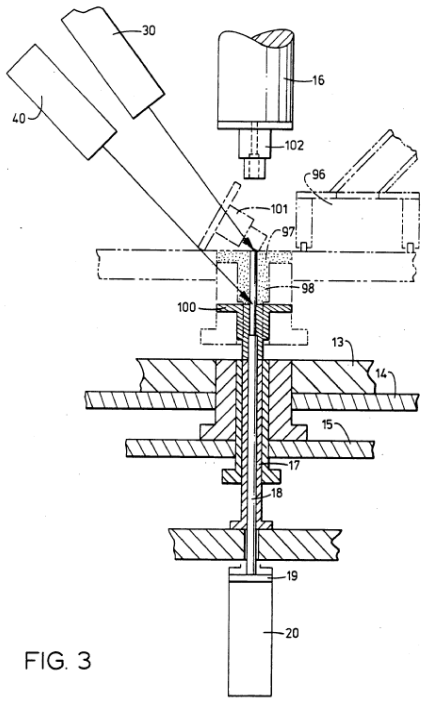

FIG. 3

B30B 15/287

{preventing unintended ram movement, e.g. using blocking devices}

Definition statement

This place covers:

Illustrative example of subject matter classified in this group:

FR-A-2057255

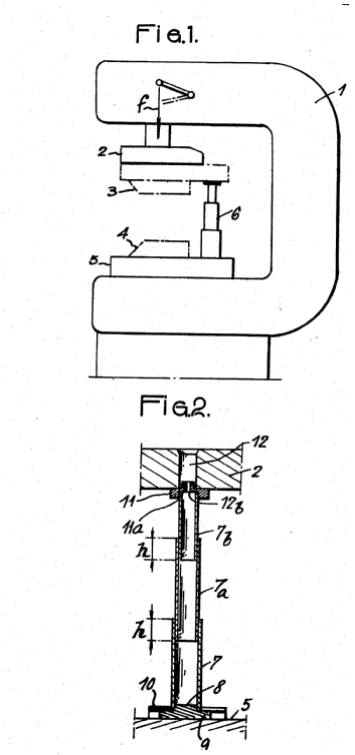

B30B 15/288

{preventing over-run or reverse-run of the press shaft}

Definition statement

This place covers:

Illustrative example of subject matter classified in this group:

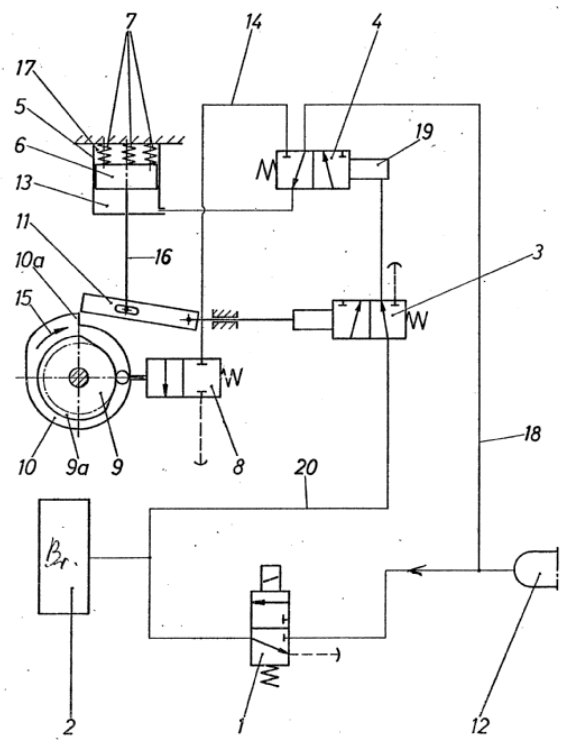

DE-A-2110841

B30B 15/30

Feeding material to presses

Definition statement

This place covers:

Illustrative example of subject matter classified in this group:

DE-A-3008485

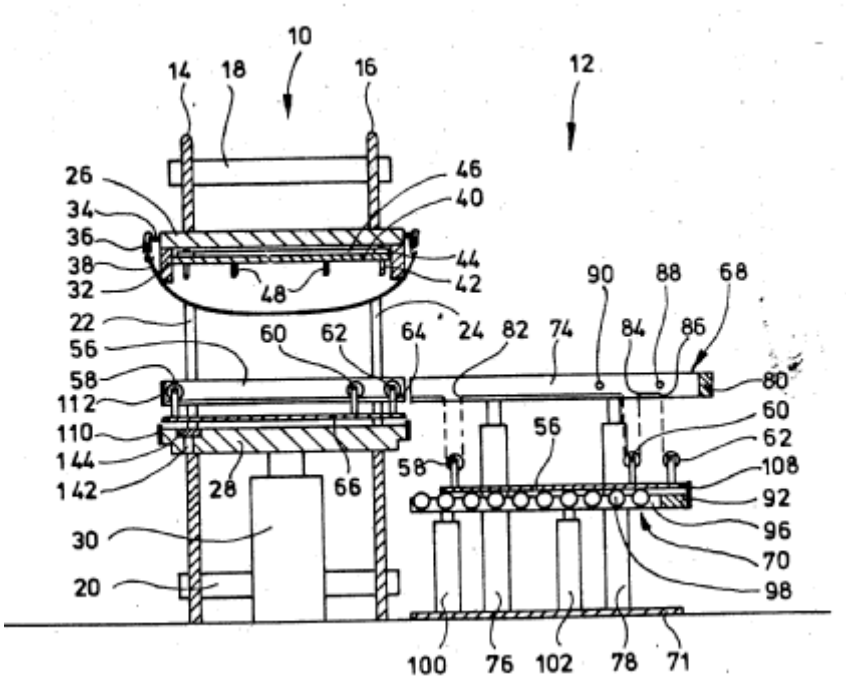

References

Informative references

Attention is drawn to the following places, which may be of interest for search:

Feeding the unshaped material to moulds or apparatus for producing shaped articles	B28B 13/00

B30B 15/302

{Feeding material in particulate or plastic state to moulding presses}

Definition statement

This place covers:

Illustrative example of subject matter classified in this group:

DE-A-19600976

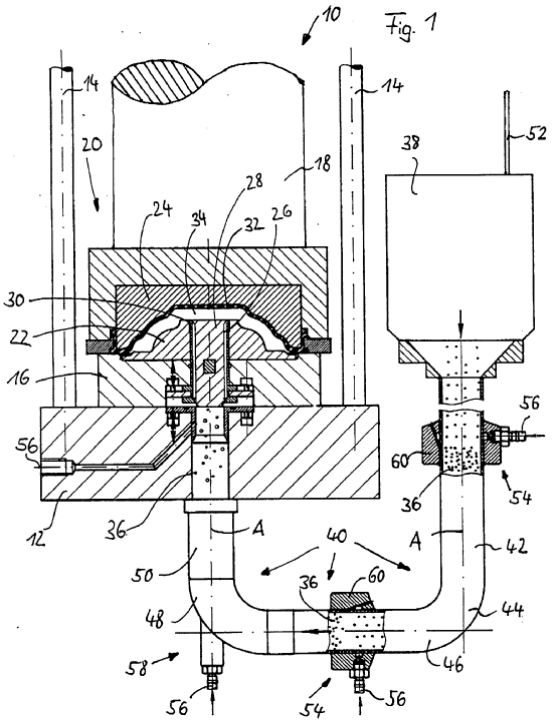

B30B 15/304

{by using feed frames or shoes with relative movement with regard to the mould or moulds}

Definition statement

This place covers:

Illustrative example of subject matter classified in this group:

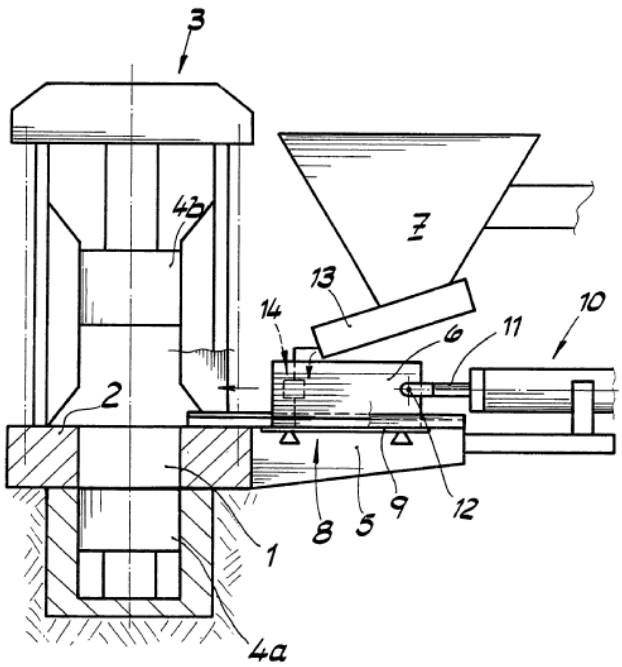

DE-A-4328381

References

Informative references

Attention is drawn to the following places, which may be of interest for search:

By using a feed box transferring the moulding material from a hopper to the moulding cavities	B28B 13/023

B30B 15/306

{for multi-layer articles}

Definition statement

This place covers:

Illustrative example of subject matter classified in this group:

DE-A-3206981

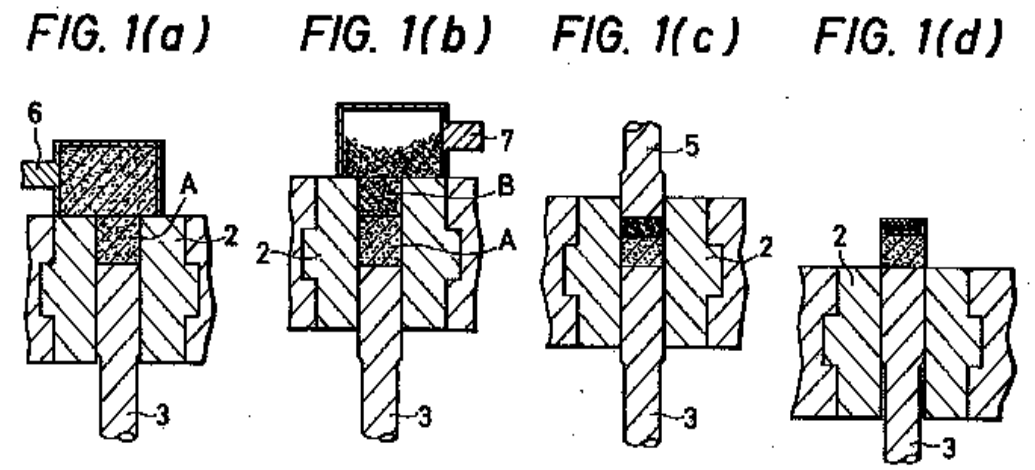

References

Informative references

Attention is drawn to the following places, which may be of interest for search:

Feeding several successive layers, optionally of different materials	B28B 13/022

B30B 15/308

{in a continuous manner, e.g. for roller presses, screw extrusion presses}

Definition statement

This place covers:

Illustrative example of subject matter classified in this group:

EP-A-2199417

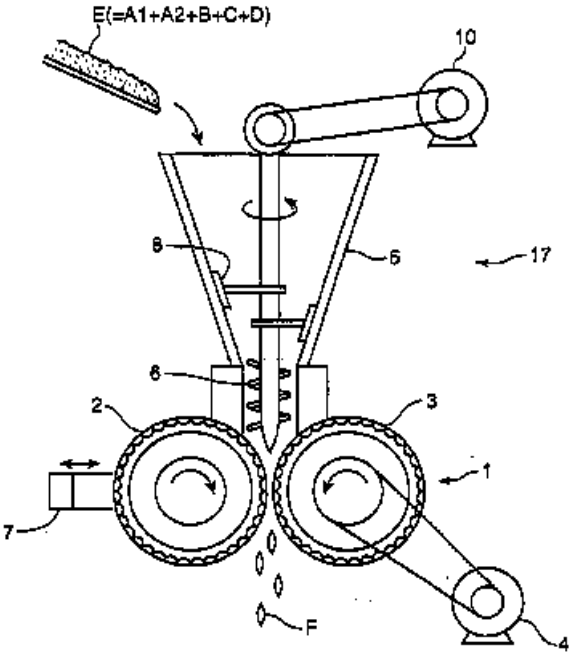

FIG.1

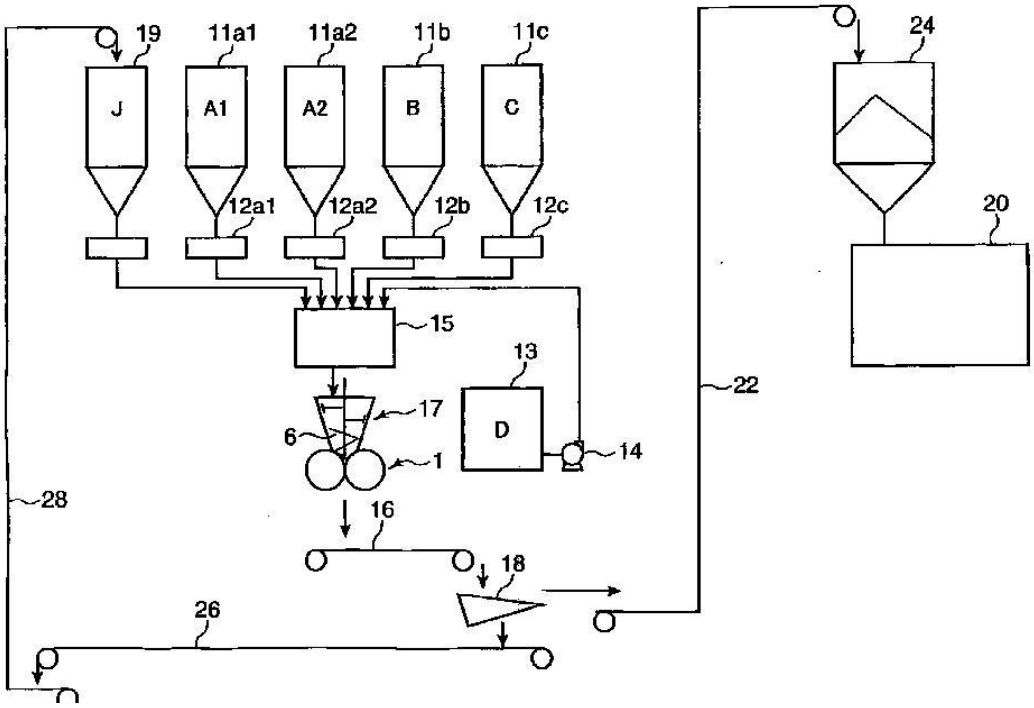

B30B 15/32

Discharging presses

Definition statement

This place covers:

Illustrative example of subject matter classified in this group:

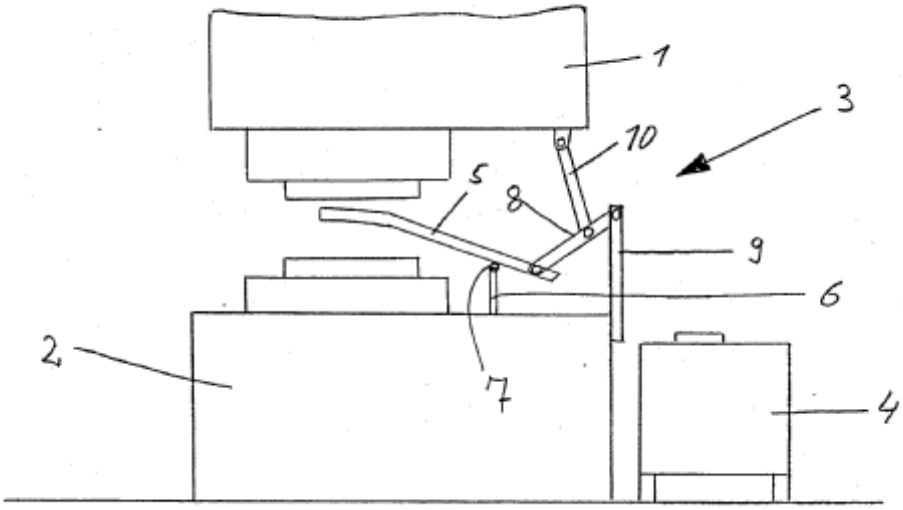

DE-C-3541756

B30B 15/34

Heating or cooling presses or parts thereof

Definition statement

This place covers:

Illustrative example of subject matter classified in this group:

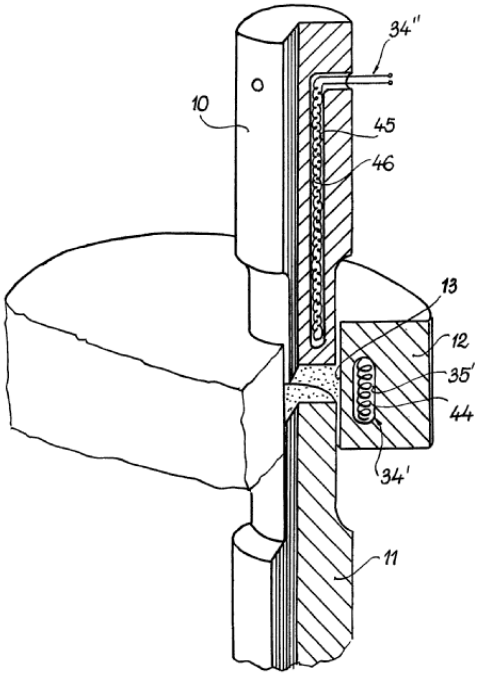

GB-A-2035195

Fig. 5