B29C

SHAPING OR JOINING OF PLASTICS; SHAPING OF MATERIAL IN A PLASTIC STATE, NOT OTHERWISE PROVIDED FOR; AFTER-TREATMENT OF THE SHAPED PRODUCTS, e.g. REPAIRING (making preforms B29B 11/00; making laminated products by combining previously unconnected layers which become one product whose layers will remain together B32B 37/00 - B32B 41/00)

Definition statement

This place covers:

Processes and apparatus for:

- shaping or joining of plastics;
- shaping of material in a plastic state when a specific material is not identified;
- shaping of material in a plastic state, not otherwise provided for.

Products obtained by processes provided for in this subclass, as long as the products are characterised by said processes.

Relationships with other classification places

Subclass B29C is often connected with the following areas:

- B29B, related to preparation or pre-treatment of the material to be shaped, making granules or preforms, beyond recovery of plastics or other constituents of waste material containing plastics;
- B29D, related to processes and apparatus for the production of particular articles characterised by their global structure, e.g. flat, hollow, or tubular articles, by their structural features, e.g. provided with screw threads, corrugations, grooves or projections, or by their purpose, e.g. buttons, optical elements, tyres or footwear. Attention should be paid to B29 note (3), i.e. classification according to production of particular articles in subclass B29D is restricted to:
- aspects which are characteristic for the production of a particular article, and not classifiable in subclass B29B or B29C;
- combined operations for making the particular article which are not fully classifiable in subclass B29C;B29C;
- B32B, related to layered products (products built-up of strata of flat or non-flat, e.g. cellular or honeycomb form) as well as methods or apparatus for making layered products;
- C08J, related to chemical aspects or features for treating, compounding, working-up or recovery of macromolecular substances not covered by subclasses C08B, C08C, C08F, C08G or C08H;
- C08K, related to the use of inorganic or non-macromolecular organic substances, or mixture thereof, as additives in composition of macromolecular compounds;
- C08L, related to composition of organic macromolecular compounds, such as polysaccharides and derivate, rubbers and derivate, macromolecular compounds obtained by reactions involving or not carbon-to-carbon unsaturated bonds, natural macromolecular compounds and derivatives.

References

Limiting references

This place does not cover:

Making preforms	B29B 11/00
Methods or apparatus for laminating	B32B 37/00
Ancillary operations in connection with laminating processes	B32B 38/00
Layout of apparatus or plants for lamination processes	B32B 39/00

Arrangements for controlling or monitoring lamination processes	B32B 41/00

Application-oriented references

Examples of places where the subject matter of this place is covered when specially adapted, used for a particular purpose, or incorporated in a larger system:

Moulding devices for producing toilet or cosmetic sticks	A45D 40/16

Informative references

Attention is drawn to the following places, which may be of interest for search:

Processing doughs	A21C
Processing meat	A22C
Working chocolate	A23G
Foundry moulding	B22C
Casting of Metals	B22D
Working metallic powder	B22F
Machine tools	B23
Grinding or polishing	B24
Machines, devices or processes for grinding or polishing of optical elements	B24B
Cutting work and details of apparatus related with	B26D
Means of perforating, punching, cutting-out, stamping-out and severing	B26F
Shaping clay or other ceramic compositions	B28B
Preparing clay and mixtures containing thereof	B28C
Presses in general	B30B
Extrusion presses	B30B 11/22
Making wound articles of paper, cardboard or material worded in a manner analogous to paper	B31C
Working glass	C03B
Preparation, chemical working-up and compositions of organic macromolecular compounds	C08
Candle making	C11C 5/02
Making soap	C11D 13/00
Manufacture of artificial filaments, threads, fibres, bristles or ribbons	D01D, D01F
Manufacture of articles from cellulosic fibrous suspensions or from papier-mâchè	D21J

Special rules of classification

In this subclass, the following rules must be applied:

- The working of plastics is, as far as possible, classified primarily according to the particular shaping technique used in this subclass;
- Combined operations for making a particular article which are not fully classifiable in this subclass must be classified in subclass B29D.

Products per se are not classified in this subclass. However, if a product is characterised by the way it is produced and not by its structure or composition, the production method should be classified in this subclass.In this subclass:

- repairing of articles shaped or produced by using techniques covered by this subclass or subclass B29D is classified in group B29C 73/00;
- component parts, details, accessories or auxiliary operations which are applicable to more than one moulding technique are classified in groups B29C 31/00 - B29C 37/00;
- component parts, details, accessories or auxiliary operations which are only applicable or only of use for one specific shaping technique are classified only in the relevant subgroups of groups B29C 39/00 - B29C 71/00.

In this subclass, it is desirable to add the indexing codes of subclasses B29K and/or B29L.

Glossary of terms

In this place, the following terms or expressions are used with the meaning indicated:

A plastic	is a macromolecular compound or composition based on such a compound
In a plastic state	refers to a state in which the material is more or less easily deformable, locally or as a whole, by force in any direction, to assume and retain any desired shape.

Synonyms and Keywords

In patent documents, the following abbreviations are often used:

Resins	Japanese patent applications usually refer to resins instead of plastics

B29C 31/00

Handling, e.g. feeding of the material to be shaped {, storage of plastics material before moulding; Automation, i.e. automated handling lines in plastics processing plants, e.g. using manipulators or robots (discharging moulded articles from the mould B29C 37/0003; storage of prepregs or SMC after impregnation or during ageing B29C 70/54; baling of rubber B29B 15/02)}

References

Limiting references

This place does not cover:

Discharging moulded articles from the mould, using means operable from outside the mould between mould parts, e.g. robots	B29C 37/0007
Handling tyres or parts thereof, e.g. supplying, storing, conveying	B29D 30/0016
Building tyres; devices for transferring annular tyre components during the building-up stage, e.g. from the first stage to the second stage building drum	B29D 30/2607

Informative references

Attention is drawn to the following places, which may be of interest for search:

Feeding material to presses	B30B 15/30
Transport or storage devices	B65G
Measuring volume, volume flow, mass flow, or liquid level	G01F

B29C 31/002

{Handling tubes, e.g. transferring between shaping stations, loading on mandrels}

Definition statement

This place covers:

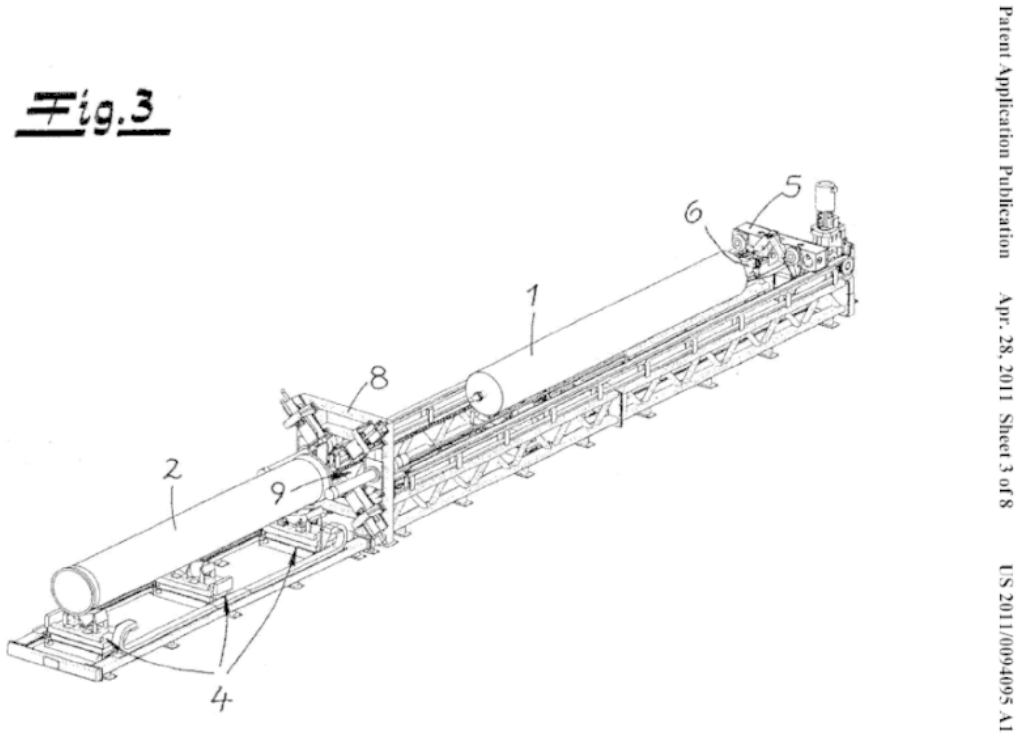

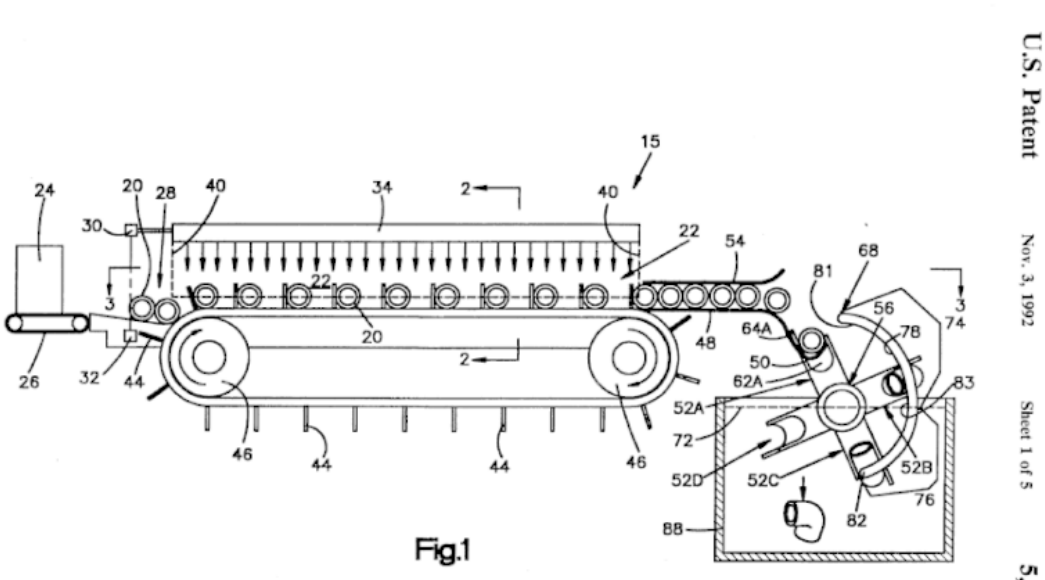
U.S. Patent
Nov. 3, 1992
Sheet 1 of 5
5,160,685
Fig.1

US-A-3,849,052

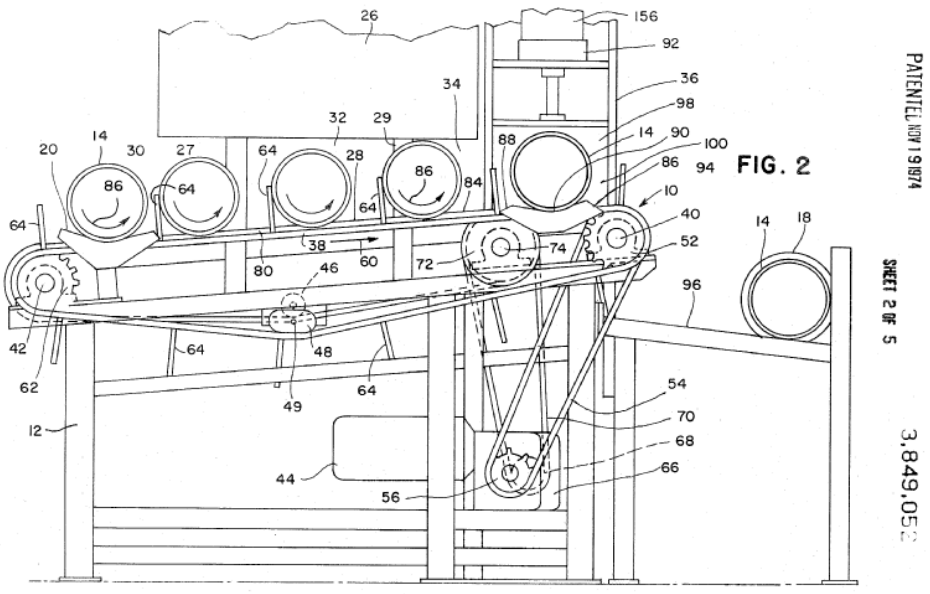
PATENTED NOV 19 1974
SHEET 2 OF 5
3,849,052
FIG. 2

US-A-3,890,079

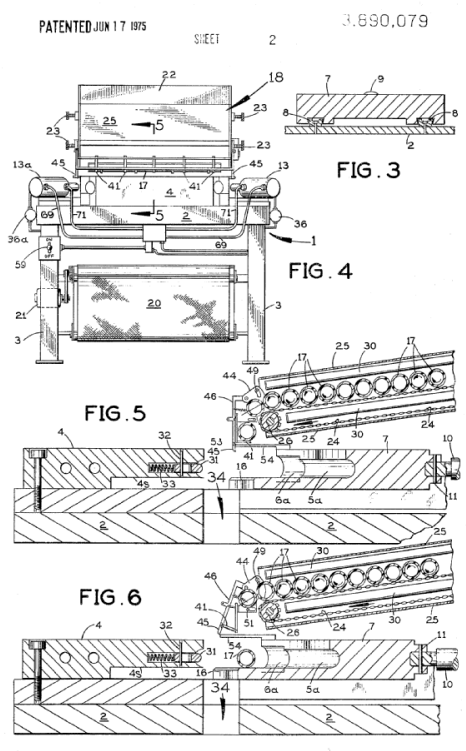

References

Limiting references

This place does not cover:

Conditioning or physical treatment of the material to be shaped, by heating hollow bodies, e.g. tubes or profiles	B29B 13/024
Conditioning or physical treatment of the material to be shaped, by heating tube ends	B29B 13/025

Informative references

Attention is drawn to the following places, which may be of interest for search:

Blow-moulding; handling means, e.g. transfer, loading or discharging	B29C 49/4205
Shaping by bending of tubes	B29C 53/083
Shaping of tube ends; e.g. flanging, belling, closing. Apparatus therefor	B29C 57/00
Shaping tubes or blown tubular films; turning tubes inside out	B29C 67/0014
Producing tubular articles	B29D 23/00

B29C 31/004

{Arrangements for converting the motion of a material which is continuously fed to a working station in a stepwise motion}

Definition statement

This place covers:

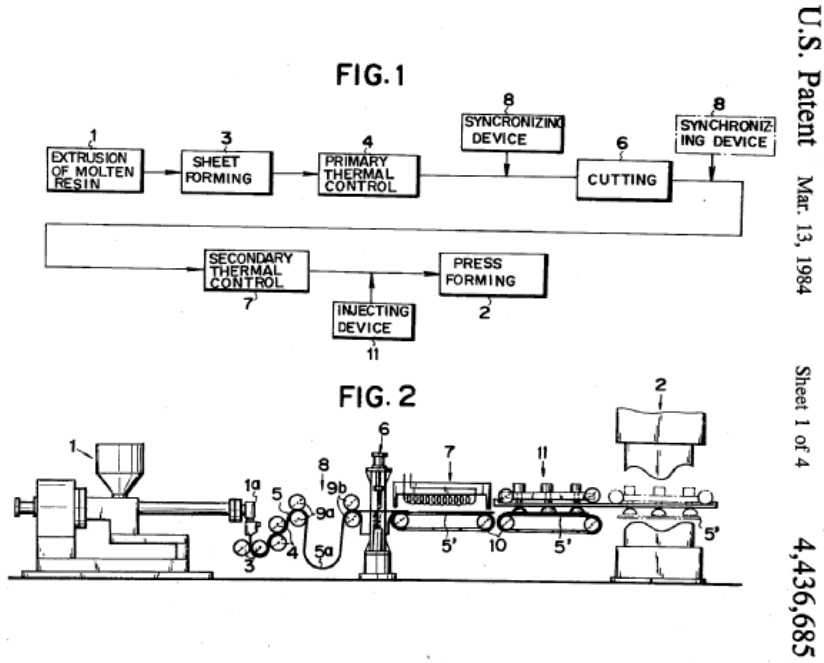

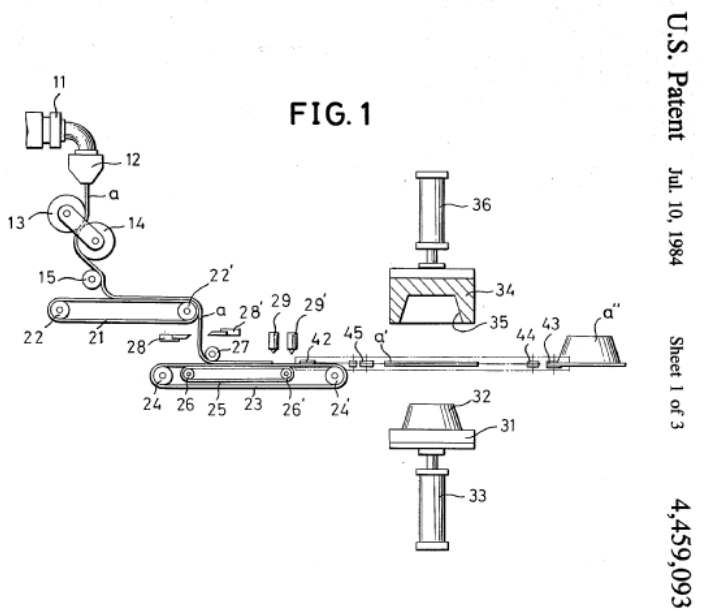

U.S.Patent April 25, 1978 Sheet 2 of 16 4,086,045

Fig. 3

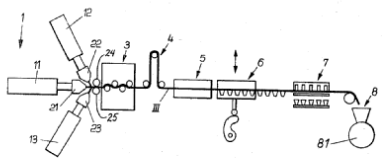

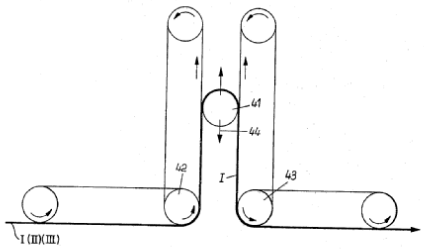

Fig. 8

References

Informative references

Attention is drawn to the following places, which may be of interest for search:

Shaping by thermoforming, handling means, e.g. transfer means, feeding means	B29C 51/261
Advancing webs in general	B65H 20/00
Advancing webs; by looping or like devices	B65H 20/24

B29C 31/006

{Handling moulds, e.g. between a mould store and a moulding machine (movable moulds B29C 33/34; for injection moulding B29C 45/1756)}

Definition statement

This place covers:

e.g. storing moulds;

e.g. clamping mould halves outside the machine,

e.g. using a clamp for transporting.

U.S. Patent Aug. 24, 1999 Sheet 1 of 3 5,940,953

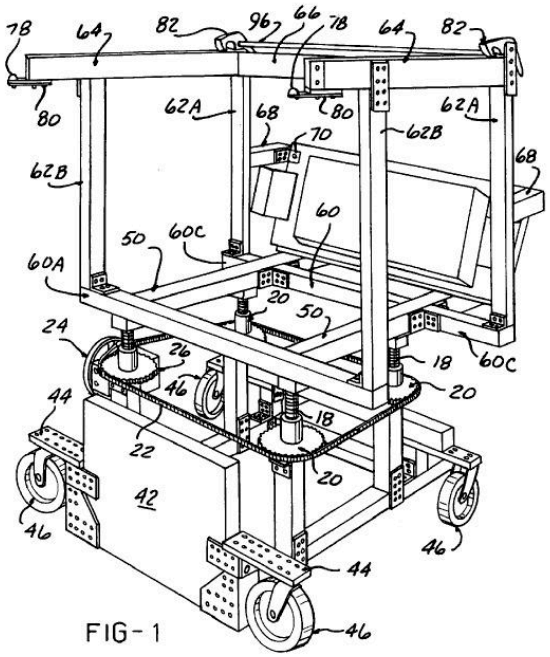

FIG-1

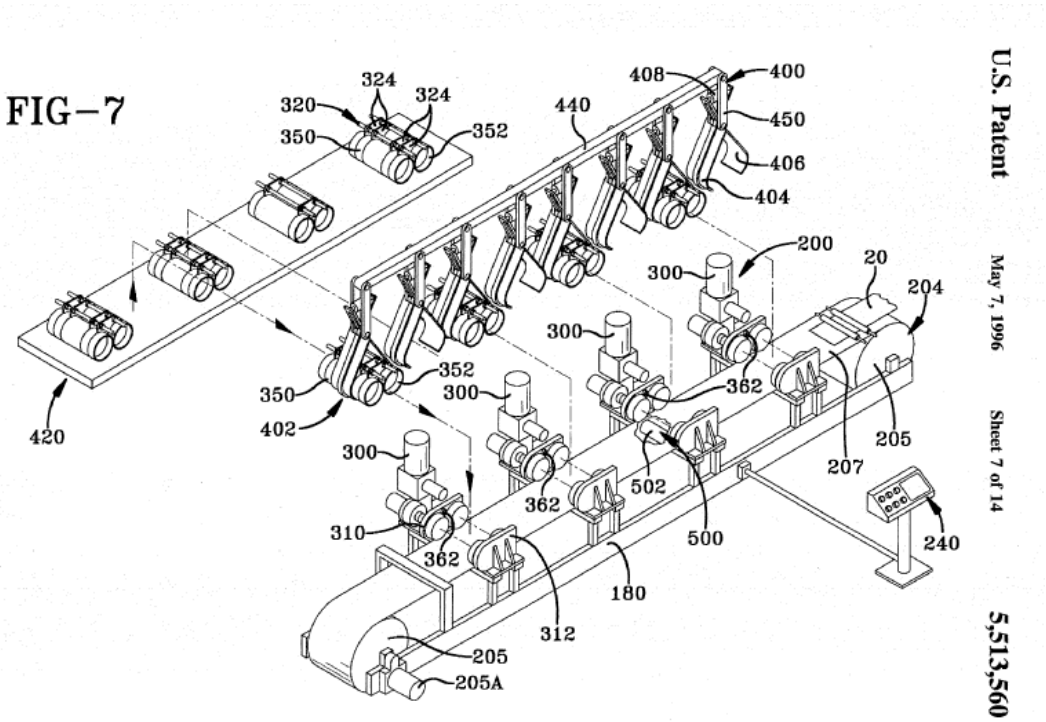

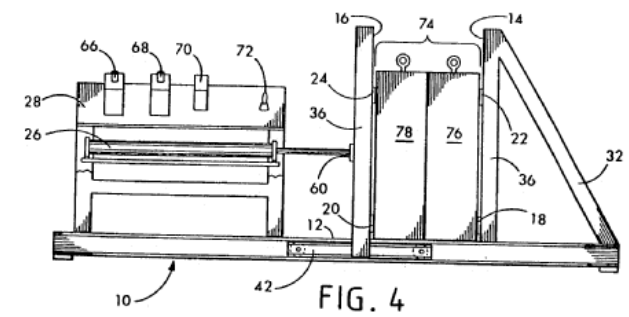

FIG. 4

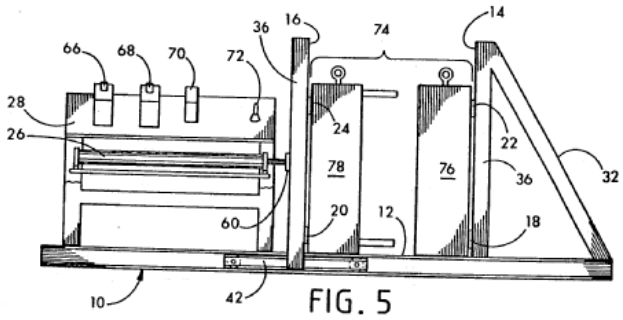

FIG. 5

U.S. Patent Apr. 16, 1991 Sheet 3 of 3 5,007,814

References

Informative references

Attention is drawn to the following places, which may be of interest for search:

- Moulds; mounting of moulds or moulds support plates	B29C 33/305
Movable moulds or cores, e.g. to or from the moulding station	B29C 33/34
Continuously movable moulds, in one direction, e.g. in a closed circuit	B29C 33/36
Injection moulding; handling of moulds or mould parts, e.g. mould changing means	B29C 45/1756
Devices holding, supporting, or positioning work or tools, of a kind normally removable from the machine	B23Q 3/00
Arrangements for handling work specially combined with or arranged in, or specially adapted for use in connection with, machine tools, e.g. for conveying, loading, positioning, discharging, sorting	B23Q 7/00
-Producing contact lenses; auxiliary operations, e.g. conveying moulds from a storage to the production line in an inert atmosphere	B29D 11/00125
Presses, loading or unloading of dies, platens or press rams	B30B 15/028

B29C 31/008

{Handling preformed parts, e.g. inserts (B29C 37/001 takes precedence; for injection moulding B29C 45/14008; for blow moulding B29C 49/2408; for thermoforming B29C 51/165)}

Definition statement

This place covers:

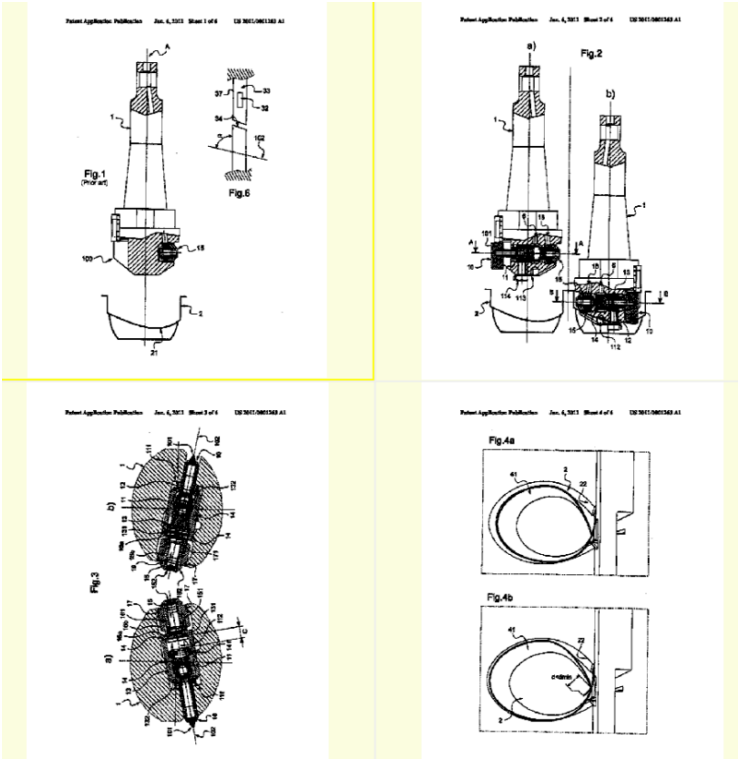

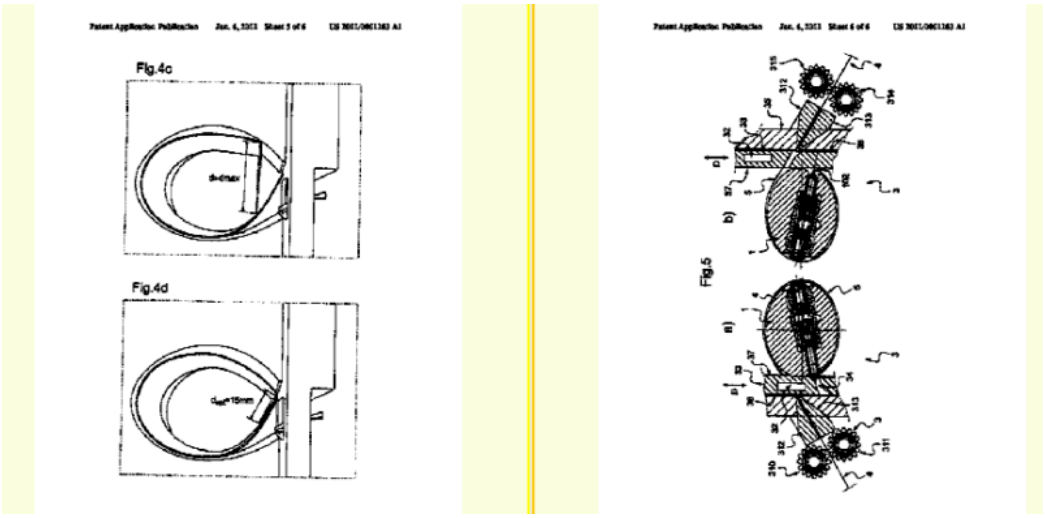

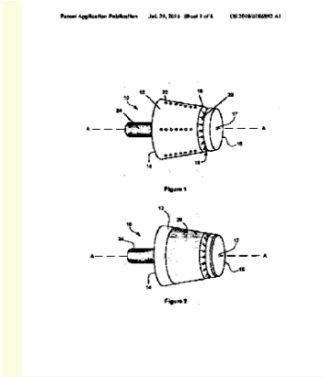

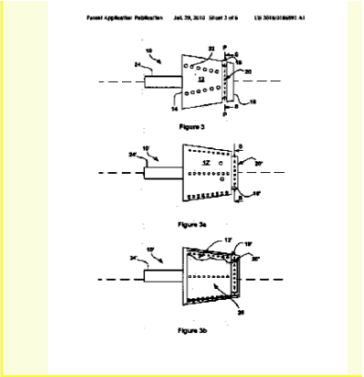

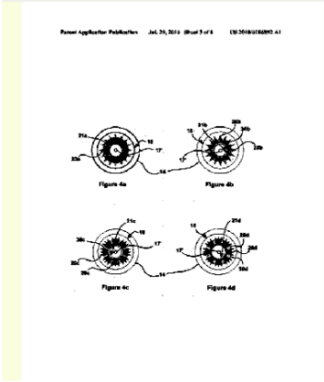

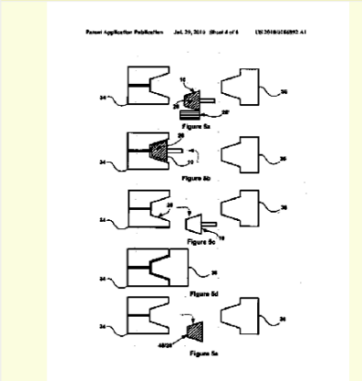

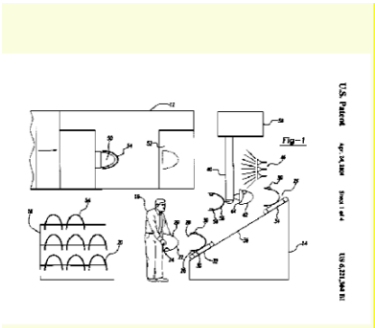
U.S. Patent
Fig–1

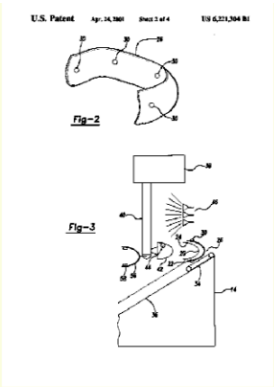
U.S. Patent
Fig–2
Fig–3

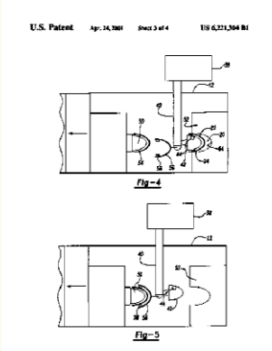
U.S. Patent
Fig–4
Fig–5

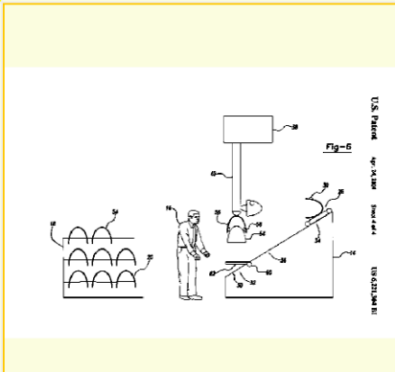
U.S. Patent
Fig–6

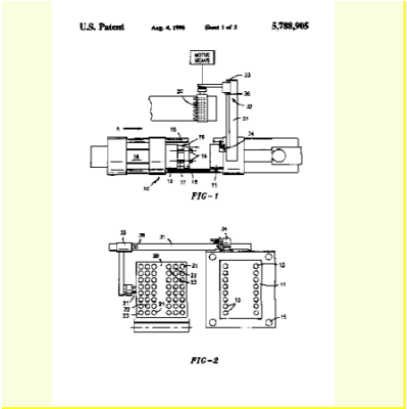

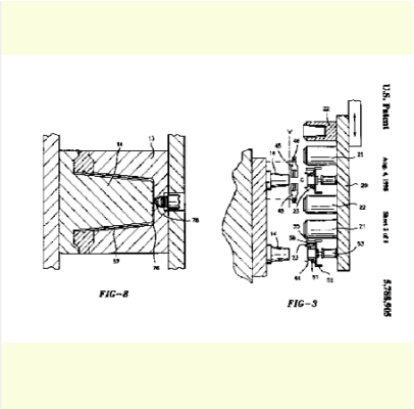

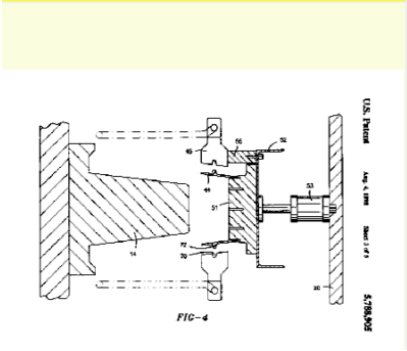

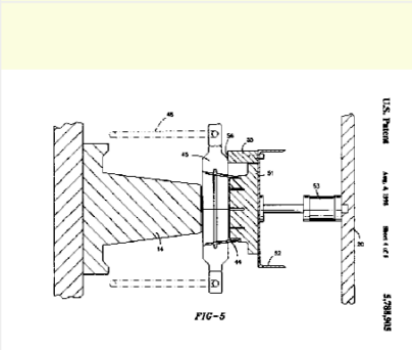

References

Informative references

Attention is drawn to the following places, which may be of interest for search:

Shaping by casting; incorporating preformed parts or layers, e.g. casting around inserts or for coating articles	B29C 39/10
Compression moulding; incorporating preformed parts or layers, e.g. compression moulding around inserts or for coating articles	B29C 43/18
Foaming; incorporating or moulding on preformed parts, e.g. inserts, reinforcements	B29C 44/12
Injection moulding; incorporating preformed parts or layers; inserting articles into the mould	B29C 45/14008
Extrusion moulding; incorporating preformed parts or layers, e.g. extrusion moulding around inserts or for coating articles	B29C 48/15
Blow moulding; inserting labels or films into blow moulds, e.g. in-mould-labellers	B29C 49/2408
Thermoforming; lining or labelling	B29C 51/16

B29C 31/02

Dispensing from vessels, e.g. hoppers {(into a mould cavity B29C 31/04; large containers characterised by discharge means B65D 88/28, B65D 88/54)}

Definition statement

This place covers:

Patent Application Publication Jun. 16, 2011 Sheet 1 of 3 US 2011/0142552 A1

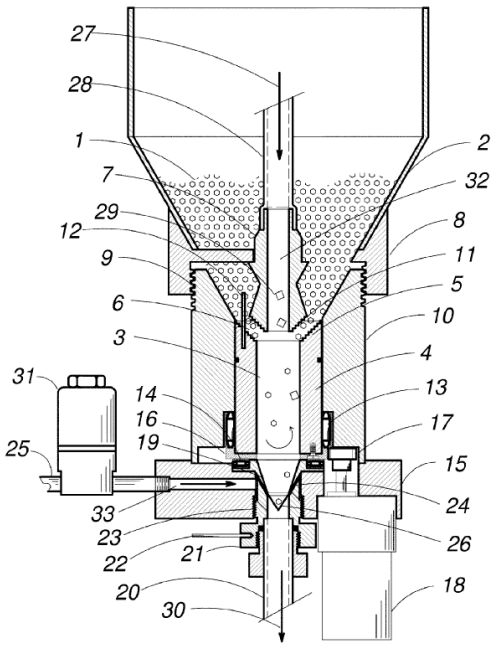

Patent Application Publication Jan. 6, 2011 Sheet 4 of 6 US 2011/0001265 A1

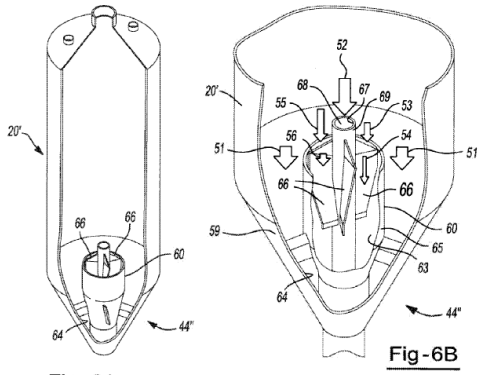

Fig-6A

Fig-6B

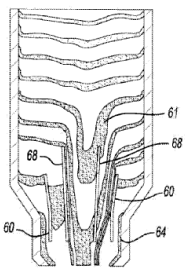

Fig-6C

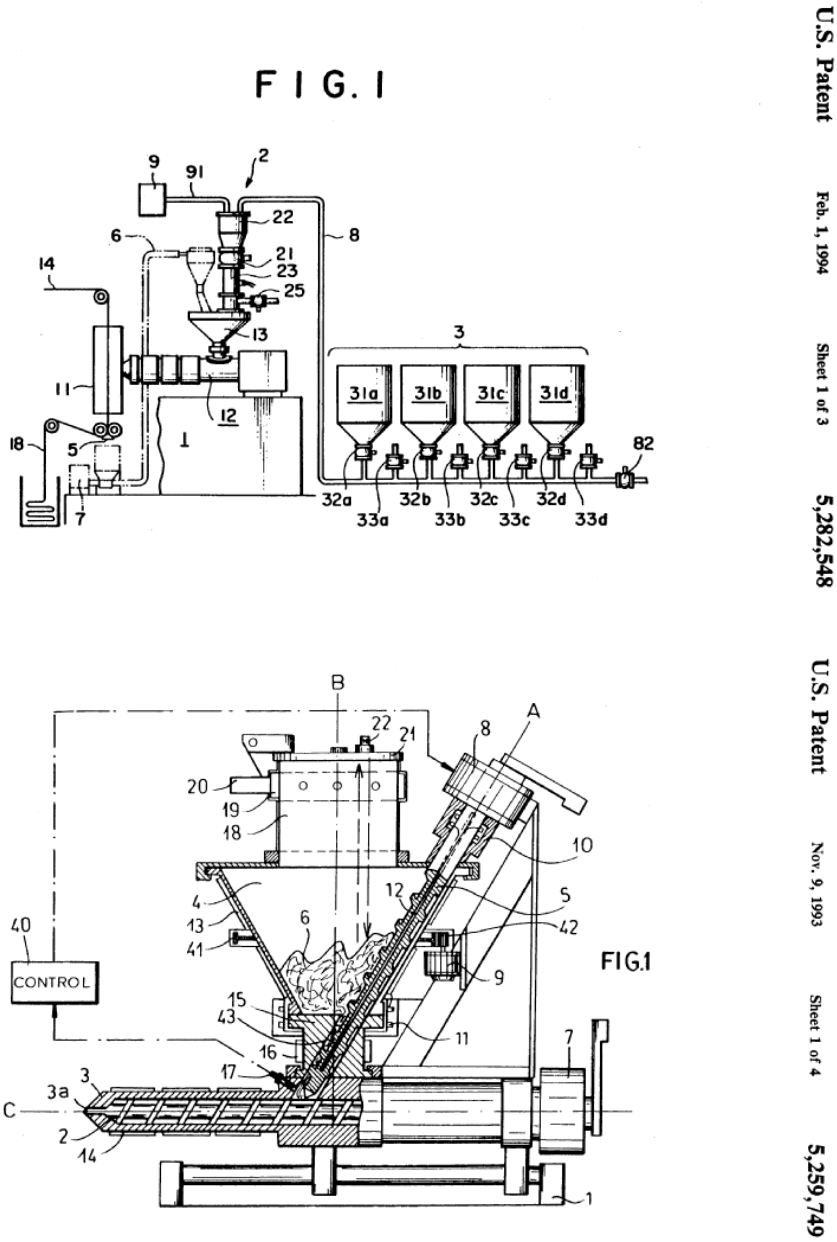

References

Informative references

Attention is drawn to the following places, which may be of interest for search:

Injection moulding; feeding the material into the injection moulding apparatus, i.e. feeding the non-plastified material into the injection unit	B29C 45/18
Extrusion moulding, feeding the material to the extruder	B29C 48/285
Methods or devices for filling or emptying bunkers, hoppers, tanks or like containers	**B60G65/30**

B29C 31/04

Feeding {of the material to be moulded}, e.g. into a mould cavity {(B29C 39/08 takes precedence; using a material distribution system to two or more fixed injection moulds B29C 45/125)}

Definition statement

This place covers:

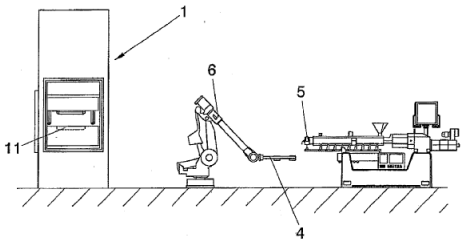

FIG. 1A

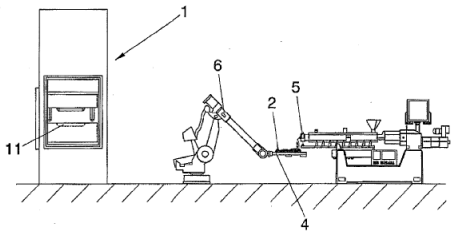

FIG. 1B

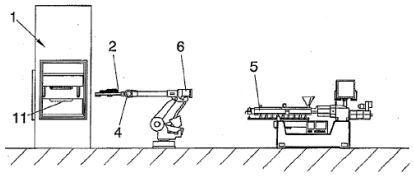

FIG. 1C

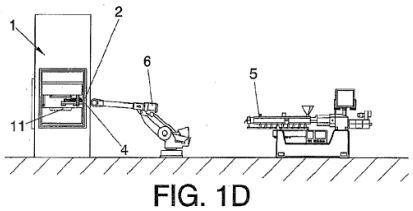

FIG. 1D

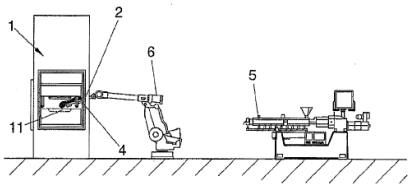

FIG. 1E

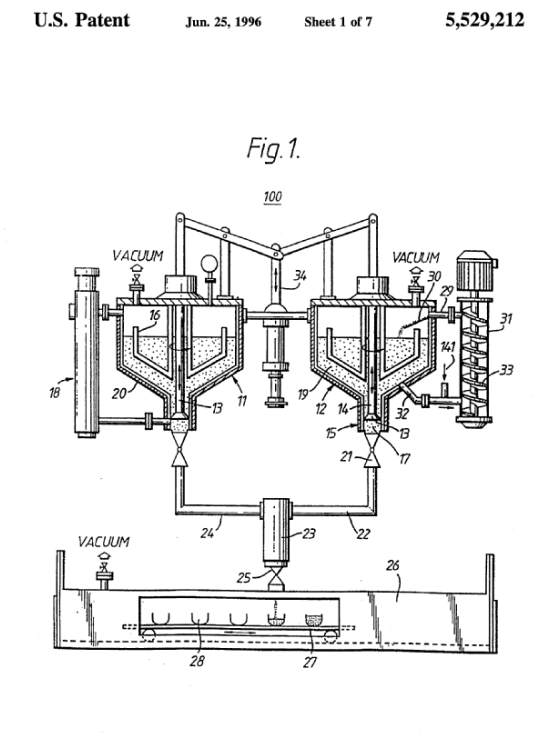

References

Informative references

Attention is drawn to the following places, which may be of interest for search:

Shaping by casting; feeding the material into the mould	B29C 39/24
Shaping by coating; feeding the material on to the mould, core or other substrate	B29C 41/36
Shaping by casting; feeding the material into the mould	B29C 43/085
Compression moulding; feeding the material to the mould or the compression means	B29C 43/34
Foaming; feeding the material to be shaped	B29C 44/36
Injection moulding; feeding the material into the injection moulding apparatus, i.e. feeding the non-plastified material into the injection unit	B29C 45/18
Extrusion moulding; feeding the material to the extruder	B29C 48/285
Accessories for mixers, feed mechanisms	B01F 35/71
Producing lenses, machine for filling the moulds	B29D 11/00432
Feeding material in particulate or plastic state to moulding presses	B30B 15/302

B29C 31/041

{using filling or dispensing heads placed in closed moulds or in contact with mould walls (B29C 45/27 takes precedence)}

Definition statement

This place covers:

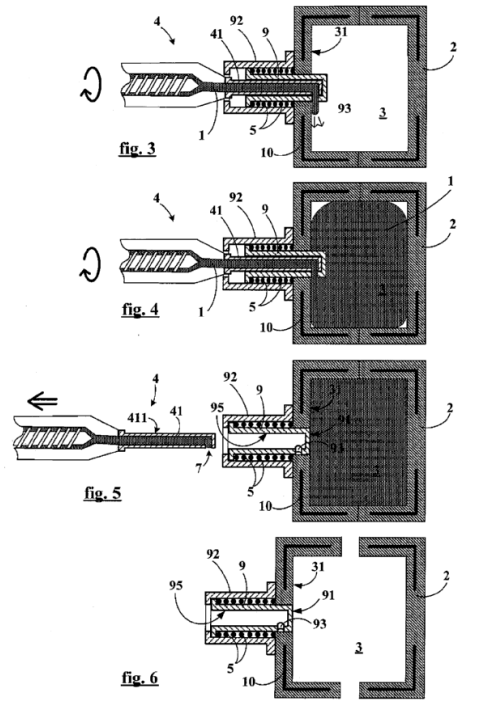

fig. 3

fig. 4

fig. 5

fig. 6

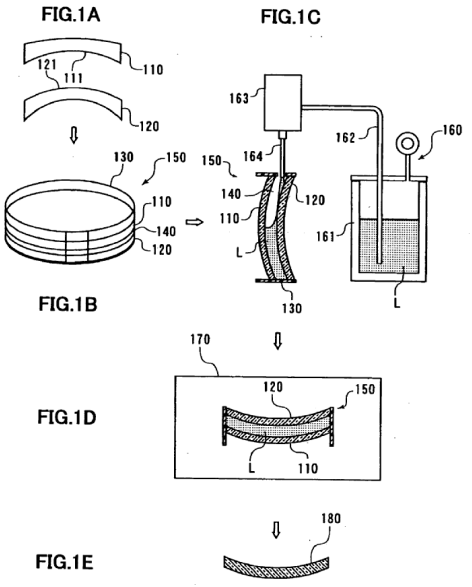

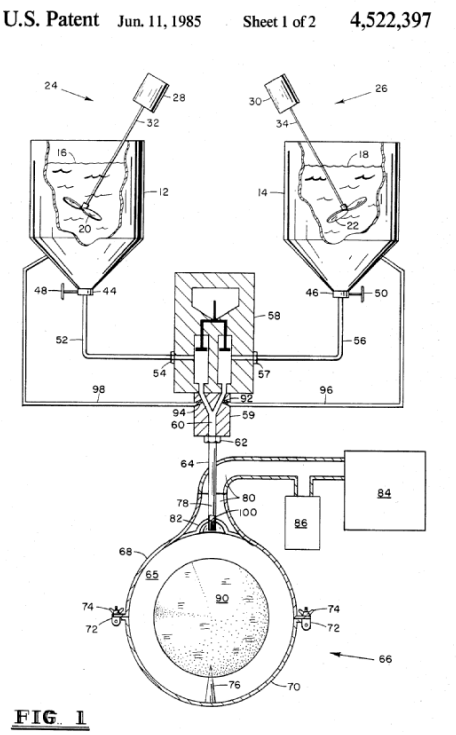

B29C 31/042

{using dispensing heads, e.g. extruders, placed over or apart from the moulds (positioning extruded preforms on conveyors B29C 31/085)}

Definition statement

This place covers:

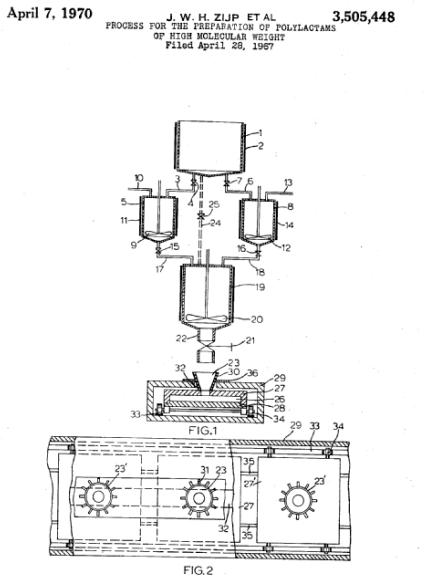

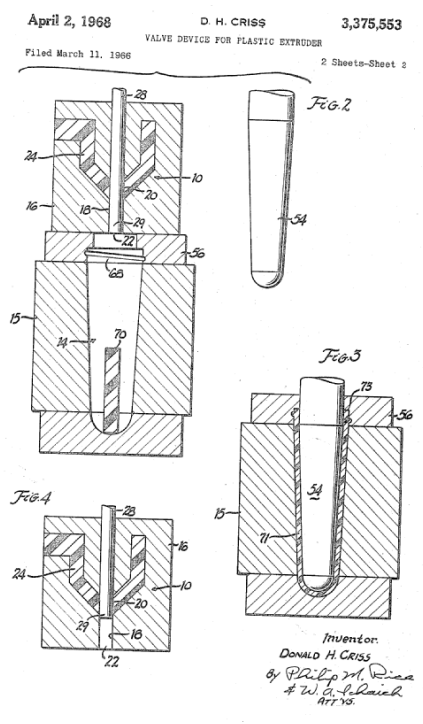

B29C 31/044

{with moving heads for distributing liquid or viscous material into the moulds}

Definition statement

This place covers:

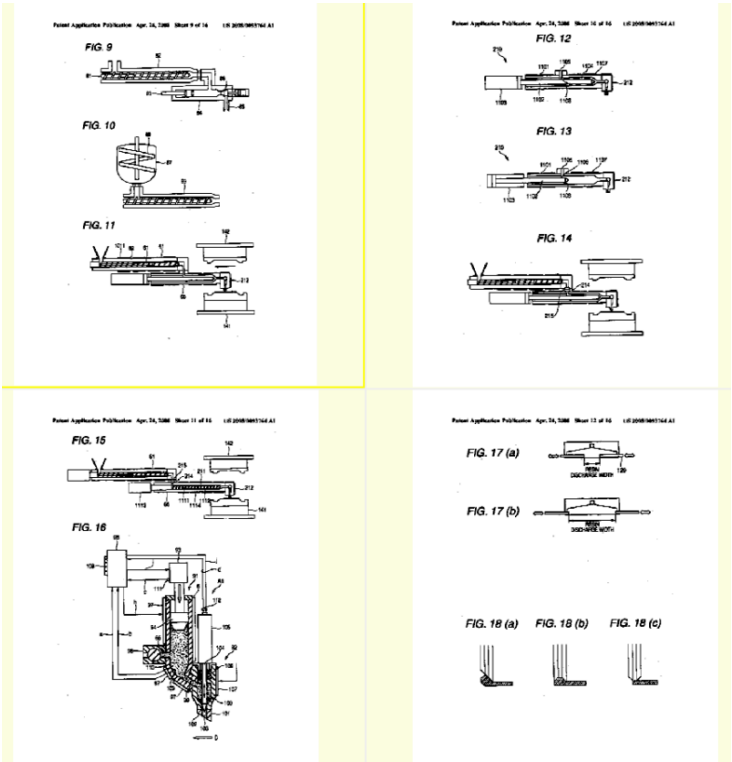

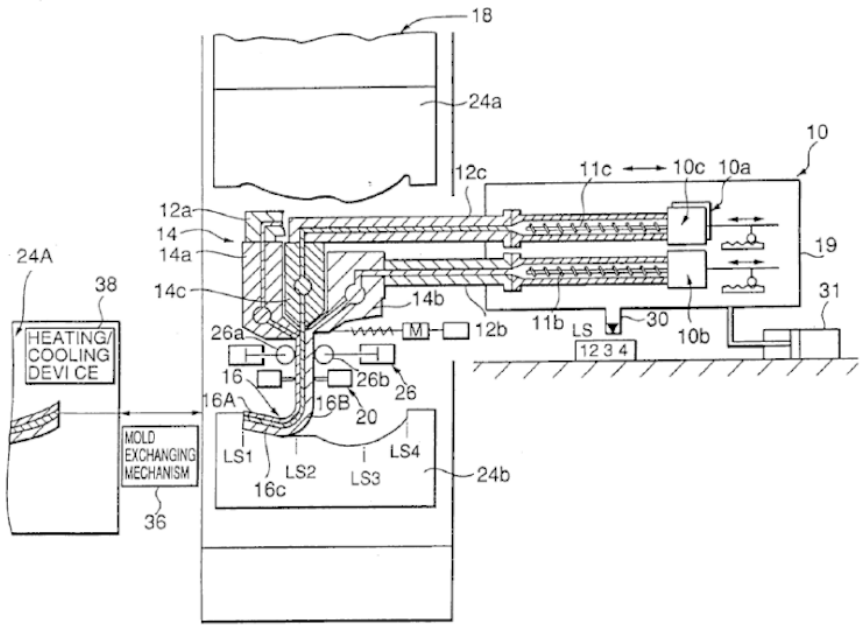

FIG.5

Patent Application Publication Aug. 5, 2004 Sheet 4 of 23 US 2004/0150126 A1

Patent Application Publication Nov. 22, 2001 Sheet 4 of 6 US 2001/0044007 A1

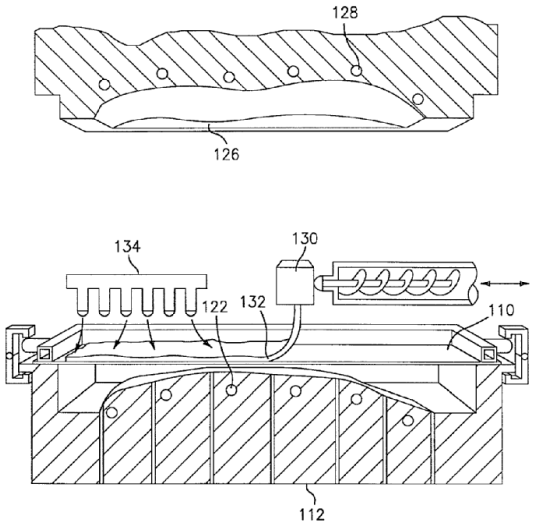

FIG. 6

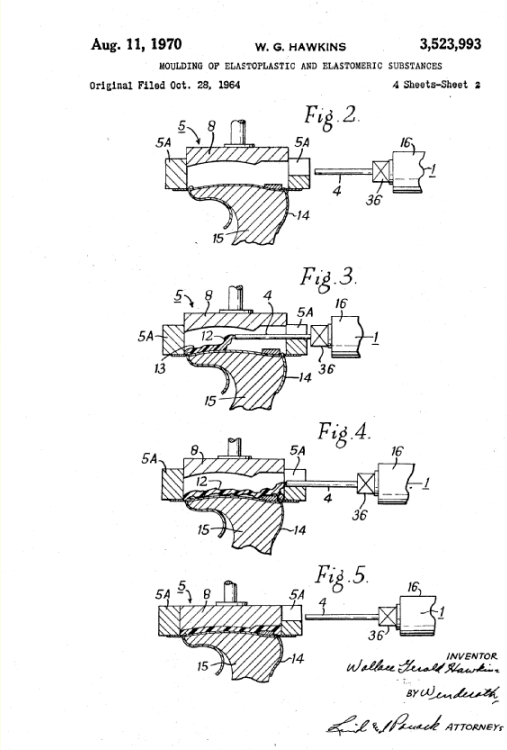

B29C 31/045

{moving along predetermined circuits or distributing the material according to predetermined patterns}

Definition statement

This place covers:

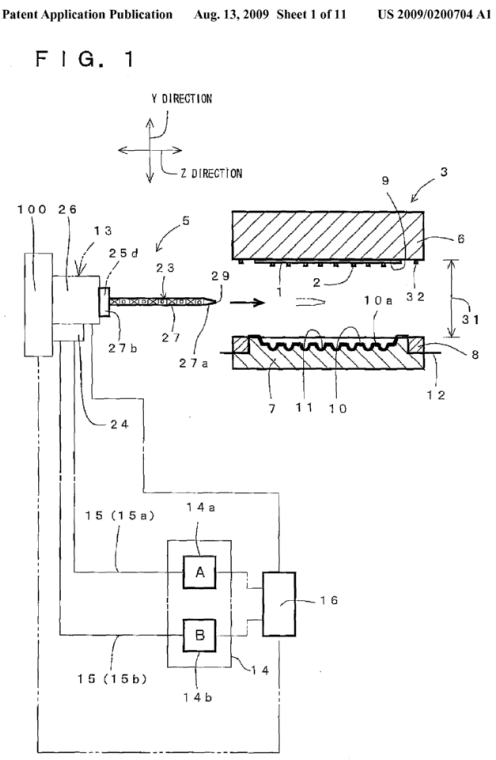

FIG. 6

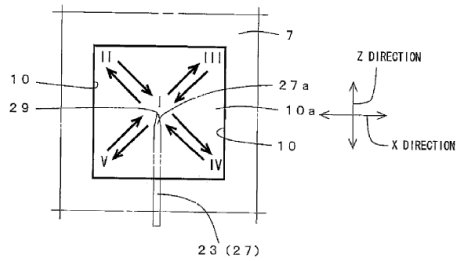

FIG. 7

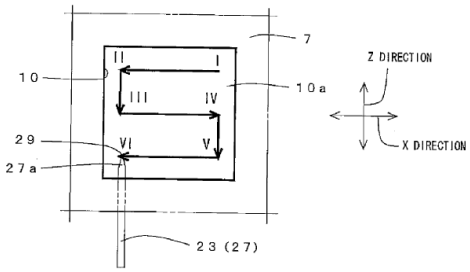

Fig. 2

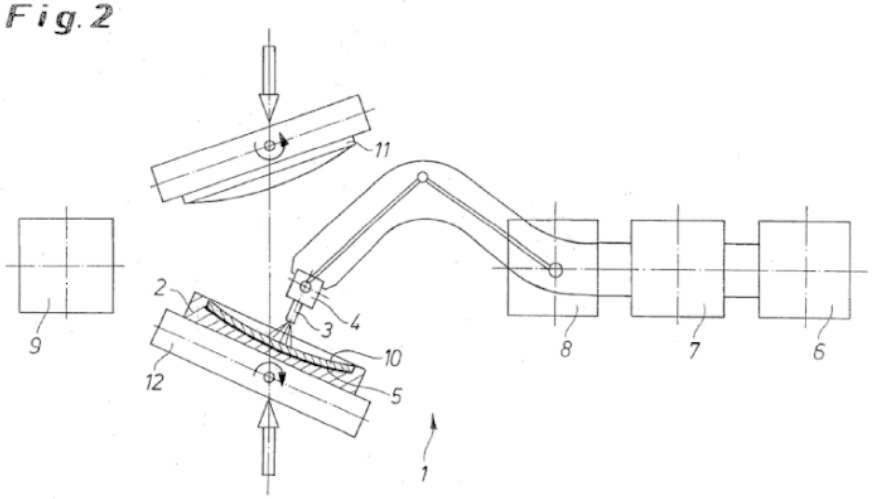

Fig. 4

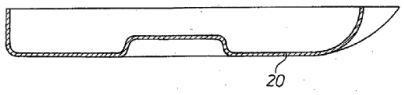

Fig. 5

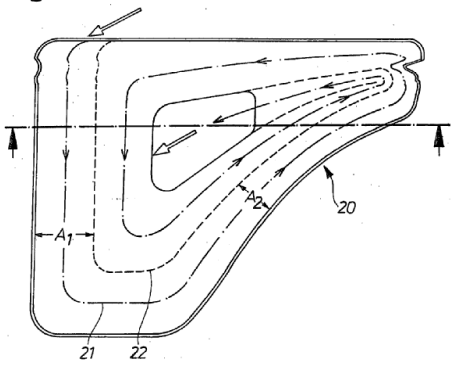

References

Informative references

Attention is drawn to the following places, which may be of interest for search:

Apparatus in which liquid or other fluent material is projected, poured or allowed to flow on to the surface of the work; by relative movement according to a predetermined path	B05C 5/0216

B29C 31/047

{combined with moving moulds (B29C 31/044, B29C 31/048 take precedence)}

Definition statement

This place covers:

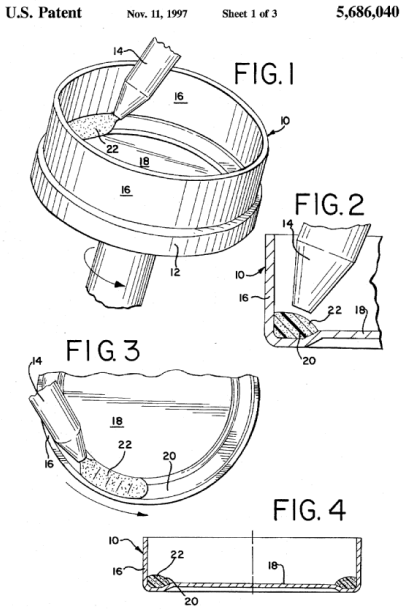

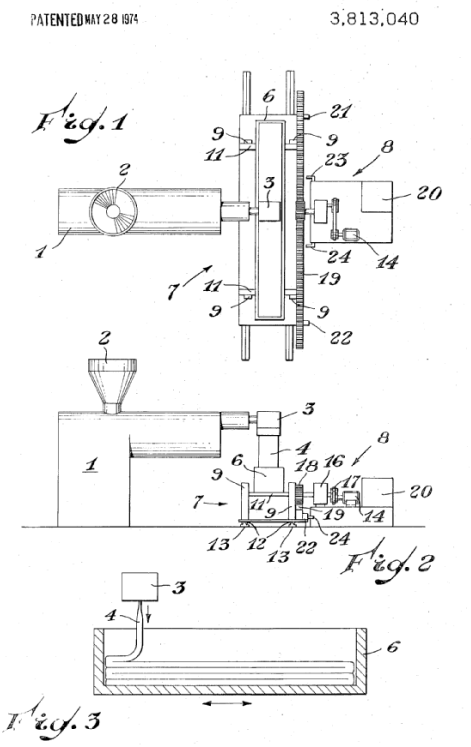

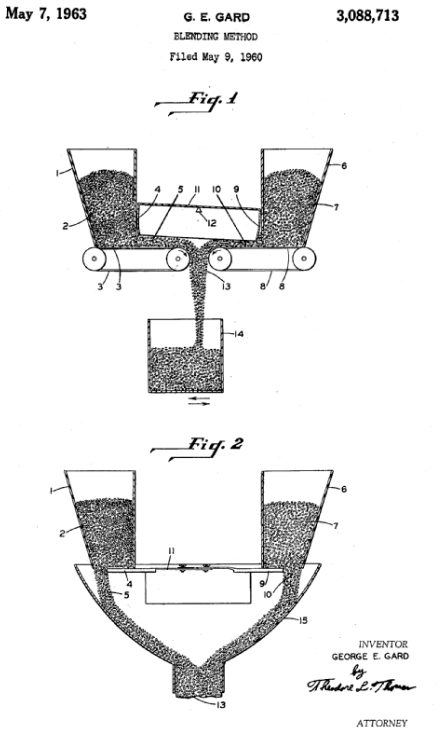

B29C 31/048

{the material being severed at the dispensing head exit, e.g. as ring, drop or gob, and transported immediately into the mould, e.g. by gravity}

Definition statement

This place covers:

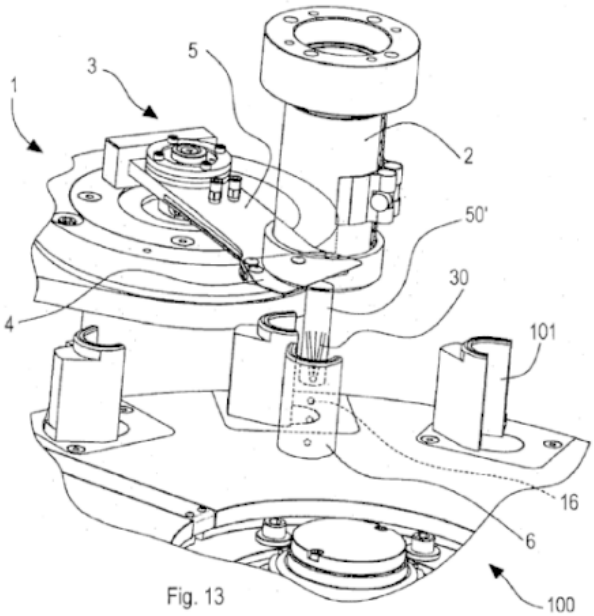

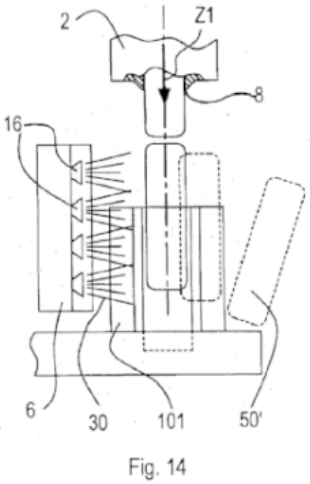

Patent Application Publication Nov. 18, 2010 Sheet 8 of 9 US 2010/0289171 A1

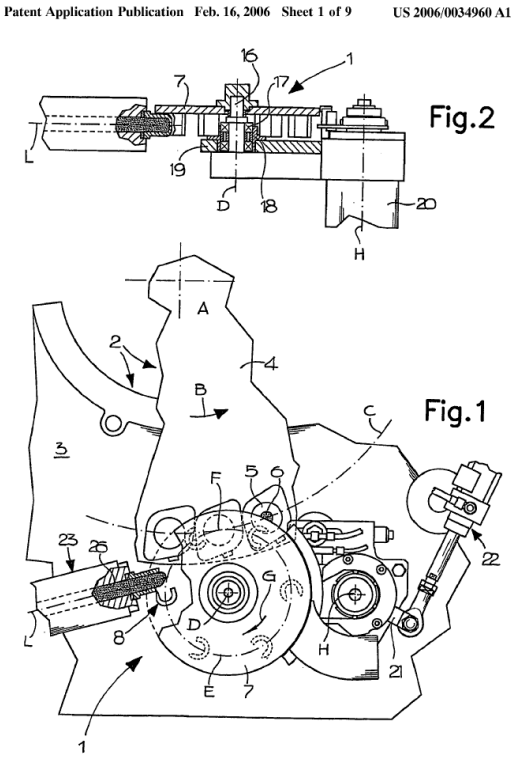

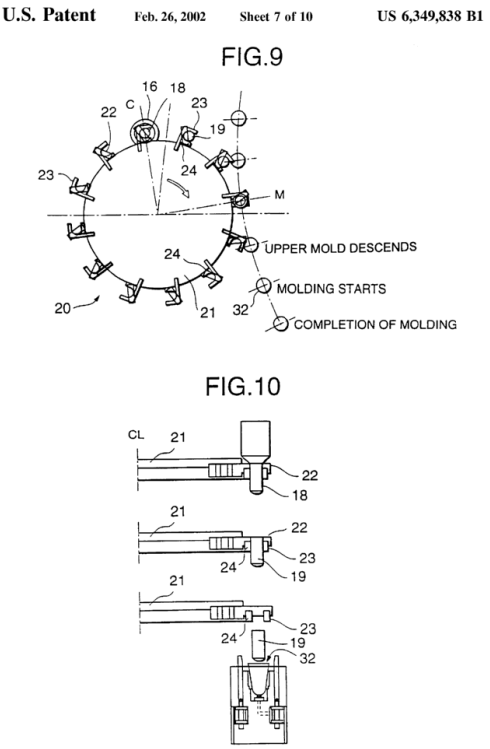

References

Informative references

Attention is drawn to the following places, which may be of interest for search:

Compression moulding; for articles of definite length; using movable moulds with circular movement; the material being fed in a continuous form	B29C 43/085

Compression moulding; feeding the material to the mould or the compression means	B29C 43/34

B29C 31/06

in measured doses {, e.g. by weighting (feeding mixers with measured doses B01F 35/714, B01F 35/882, B29B 7/24, B29B 7/603)}

Definition statement

This place covers:

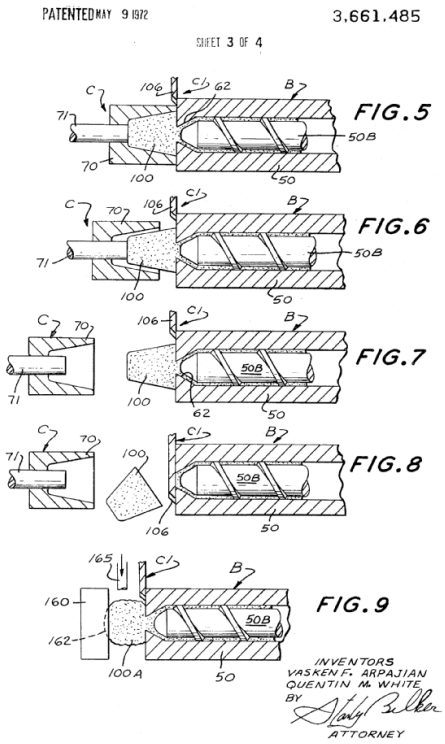

References

Limiting references

This place does not cover:

Mixing, kneading; continuous, with mechanical mixing or kneading devices; feeding in measured doses, e.g. proportioning of several materials: B29B 7/603.

Informative references

Attention is drawn to the following places, which may be of interest for search:

Injection moulding; feeding the material into the injection moulding apparatus, i.e. feeding the non-plastified material into the injection unit; feeding measured doses	B29C 45/1808

B29C 31/061

{using stationary volumetric measuring chambers}

Definition statement

This place covers:

994245 COMPLETE SPECIFICATION
2 SHEETS *This drawing is a reproduction of the Original on a reduced scale*
Sheets 1 & 2

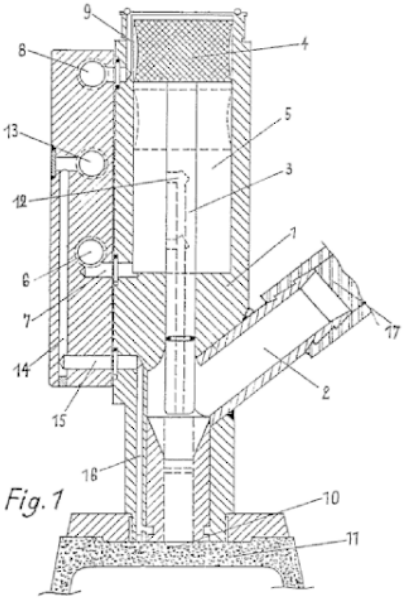

Fig. 1

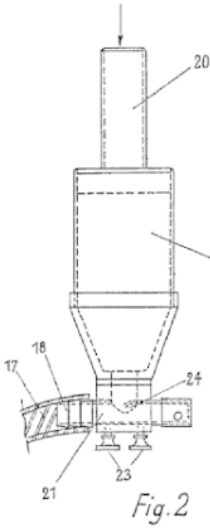

Fig. 2

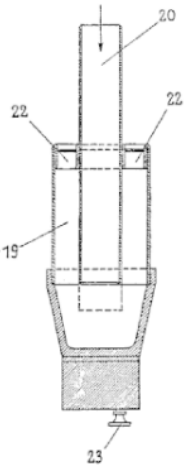

Fig. 3

B29C 31/063

{of the piston type}

Definition statement

This place covers:

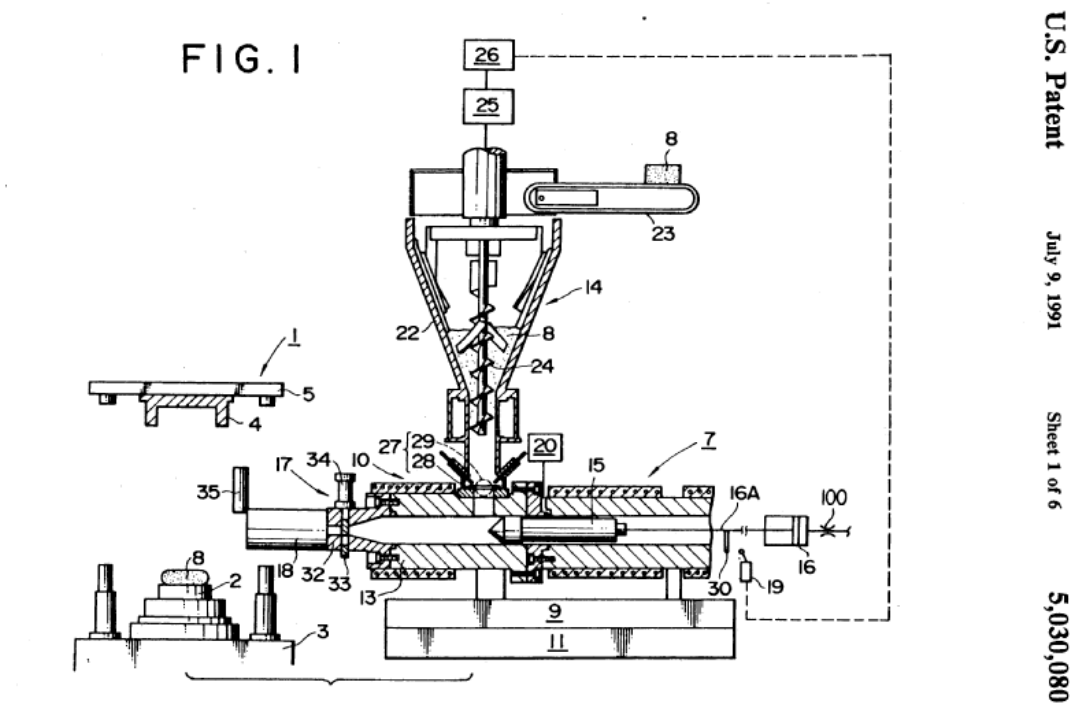

GB-2026378

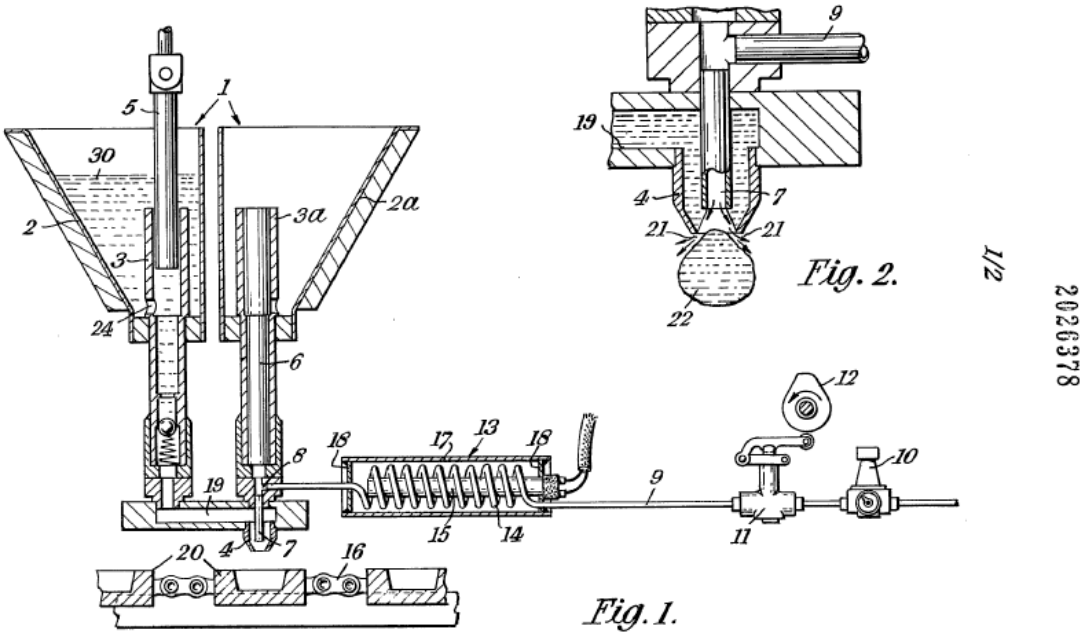

B29C 31/065

{using volumetric measuring chambers moving between a charging station and a discharge station}

Definition statement

This place covers:

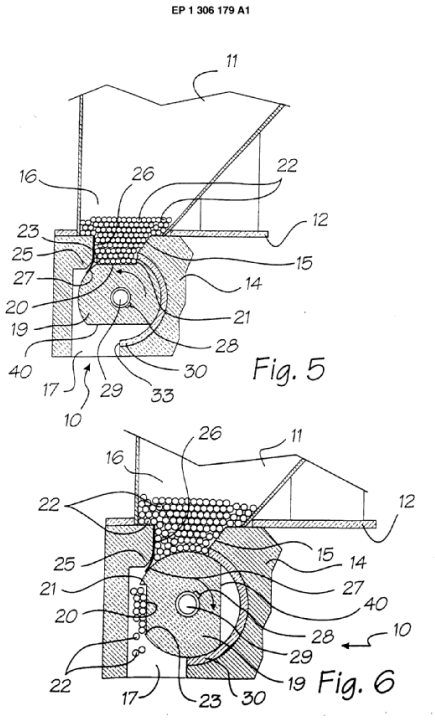

Fig. 5

Fig. 6

GB-2129363

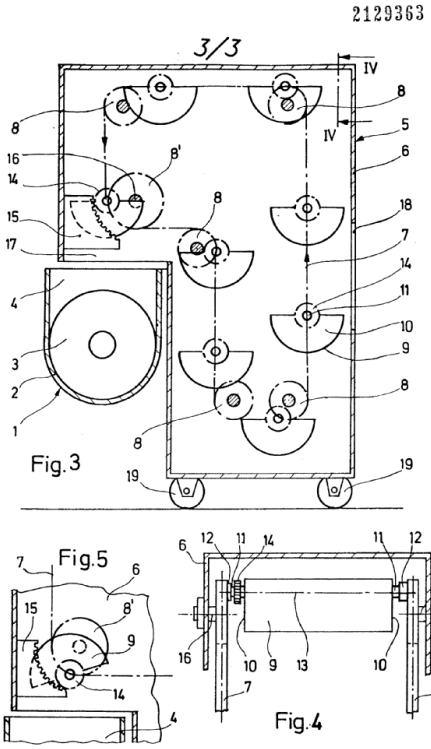

ZEICHNUNGEN BLATT 1

Nummer: **1 529 945**
Int. Cl.: **B 29 f, 1/00**
Deutsche Kl.: **39 a4, 1/00**
Auslegetag: **4. Mai 1972**

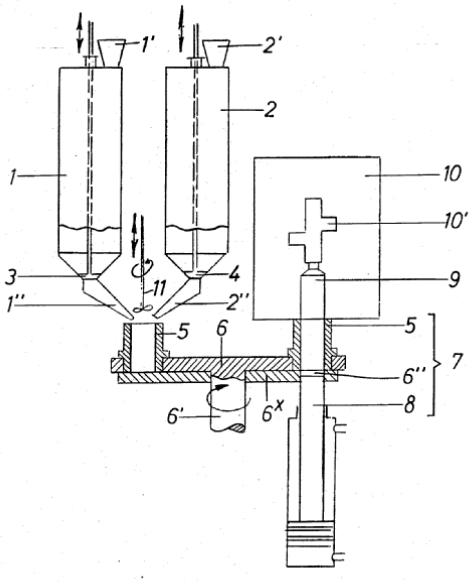

References

Informative references

Attention is drawn to the following places, which may be of interest for search:

Apparatus requiring external operation and adapted at each repeated and indentical operation to measure and separate a predetermined volume of fluid or fluent solid material from a supply or container without regard to weight and to deliver it, with measuring chambers moved during operation	G01F 11/10

B29C 31/066

{using feed frames, e.g. for dry material}

Definition statement

This place covers:

FIG.4

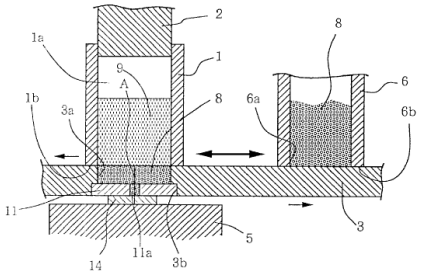

FIG.5

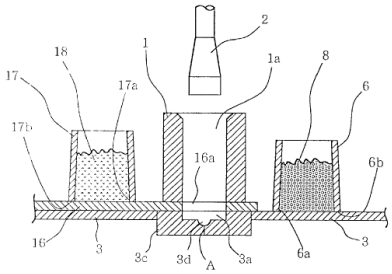

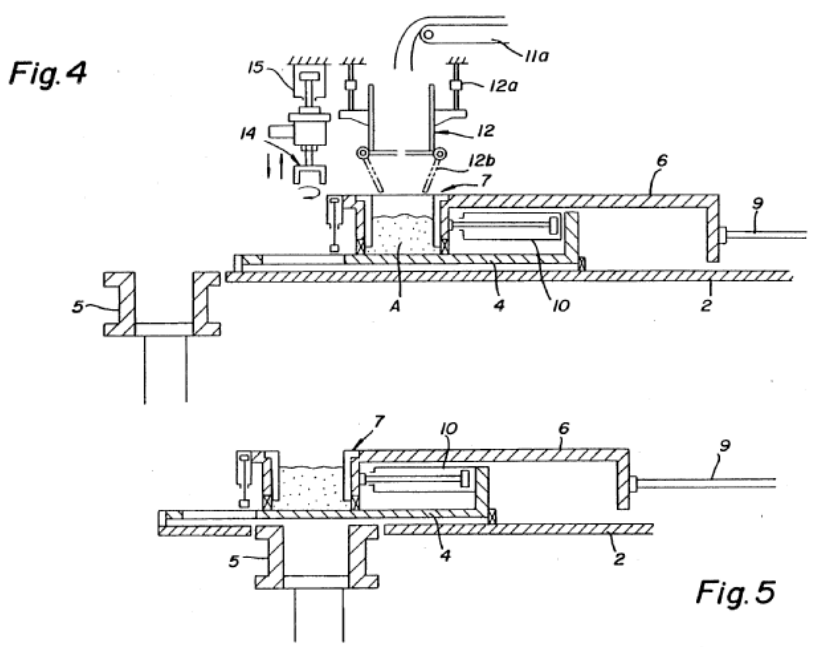

References

Informative references

Attention is drawn to the following places, which may be of interest for search:

Feeding material in particulate or plastic state to moulding presses; by using feed frames or shoes with relative movements	B30B 15/304
For multi-layer articles	B30B 15/306

B29C 31/068

{of the piston type}

Definition statement

This place covers:

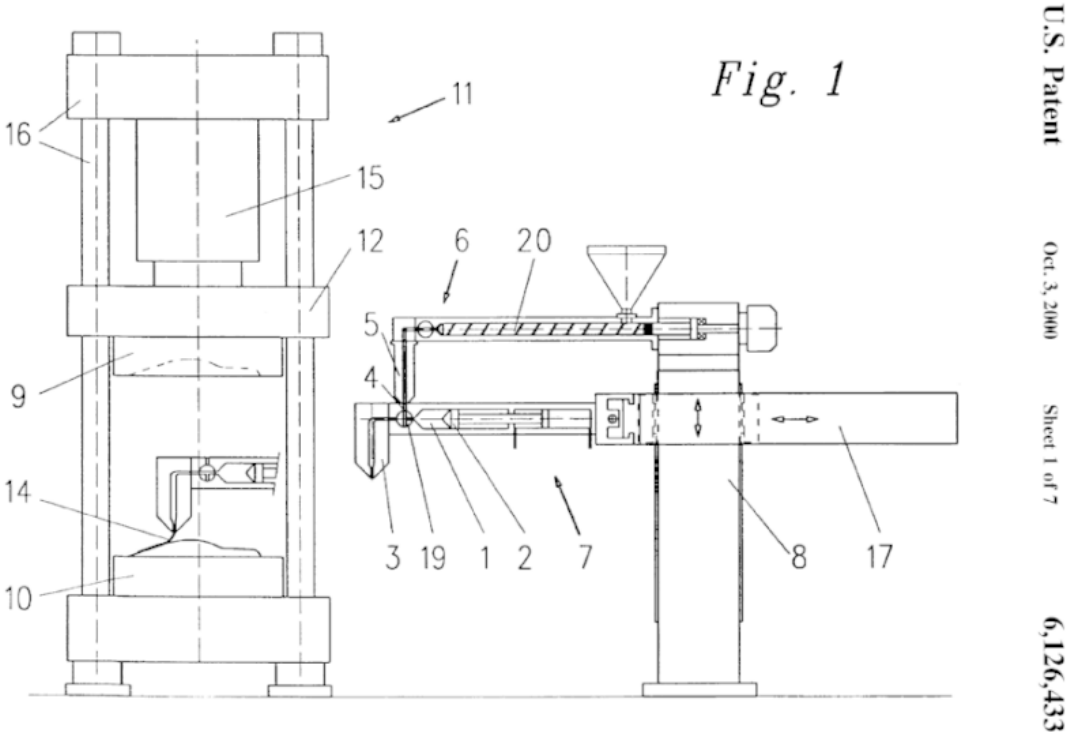

U.S. Patent Oct. 3, 2000 Sheet 1 of 7 6,126,433

GB-826,470

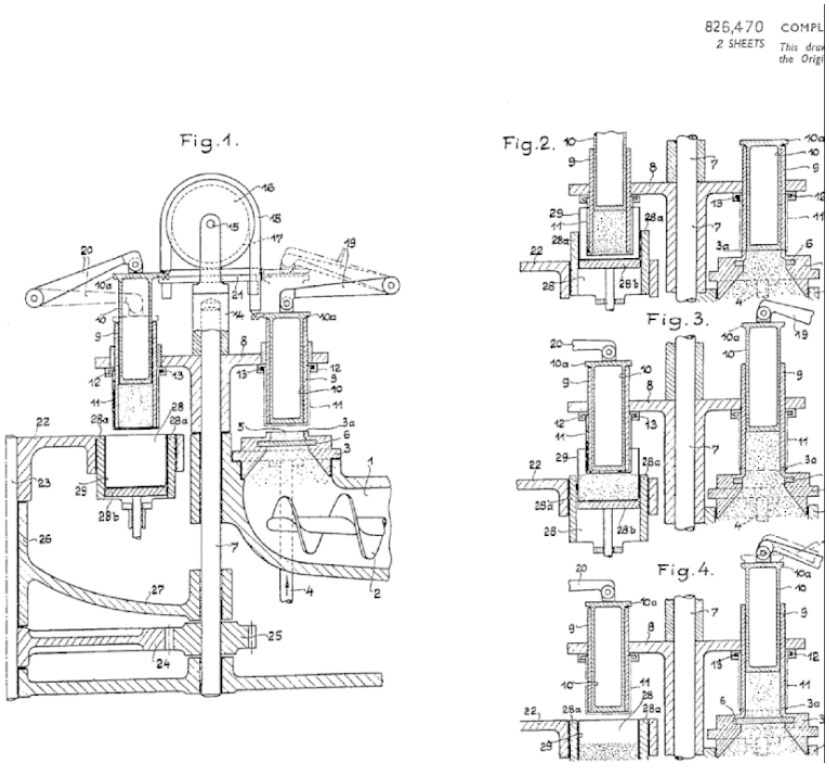

B29C 31/08

of preforms {to be moulded, e.g. tablets, fibre reinforced preforms, extruded ribbons, tubes or profiles; Manipulating means specially adapted for feeding preforms, e.g. supports conveyors (B29C 31/066, B29C 37/001, B29C 43/085 take precedence)}

Definition statement

This place covers:

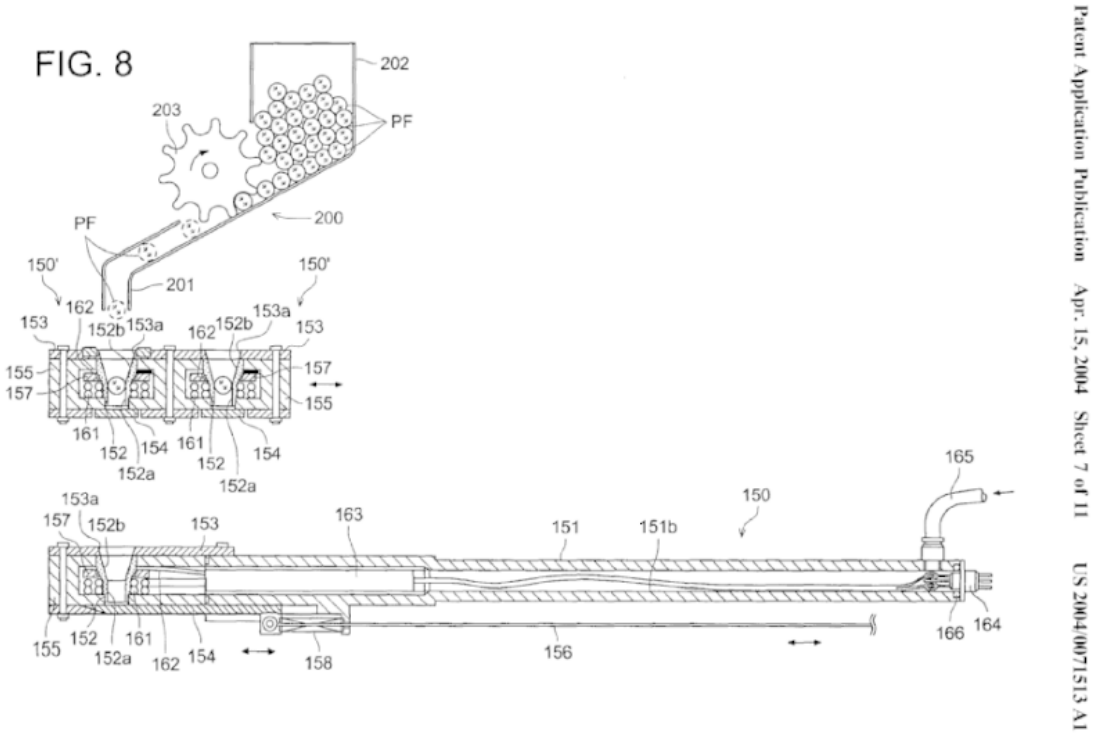

Patent Application Publication Apr. 15, 2004 Sheet 7 of 11 US 2004/0071513 A1

U.S. Patent Aug. 12, 1997 Sheet 2 of 9 5,656,305

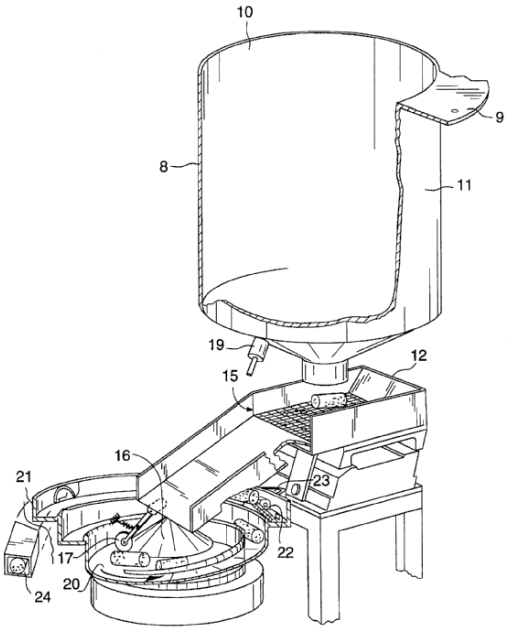

U.S. Patent Feb. 21, 1984 Sheet 2 of 2 4,432,716

FIG.2

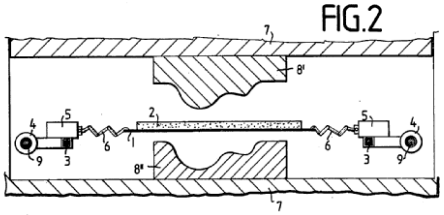

FIG.3

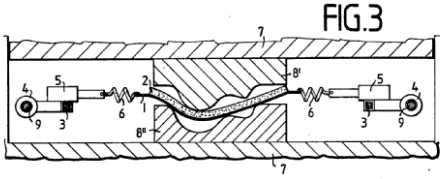

FIG.4

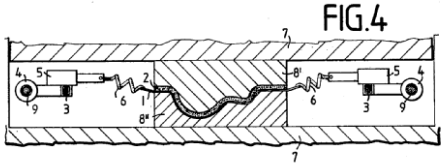

B29C 31/085

{combined with positioning the preforms according to predetermined patterns, e.g. positioning extruded preforms on conveyors (B29C 70/30 takes precedence; for building tyres B29D 30/08)}

Definition statement

This place covers:

FIG. 1

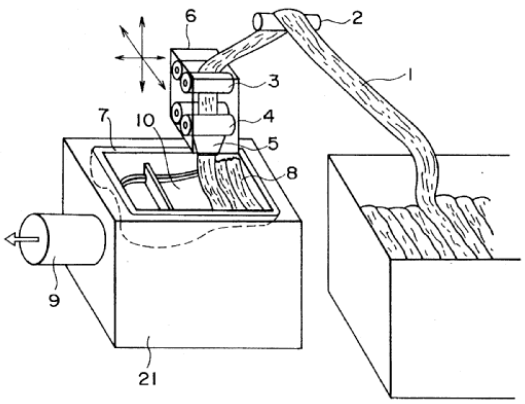

FIG. 2

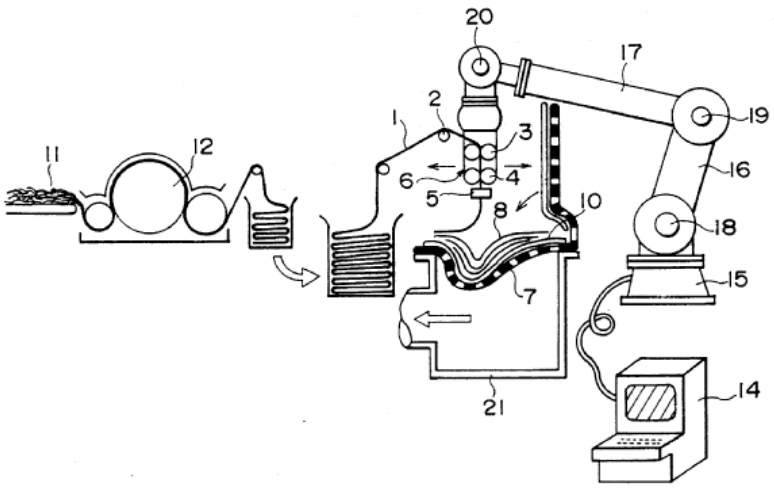

U.S. Patent Feb. 6, 1996 Sheet 2 of 10 5,489,351

FR-A-982.282

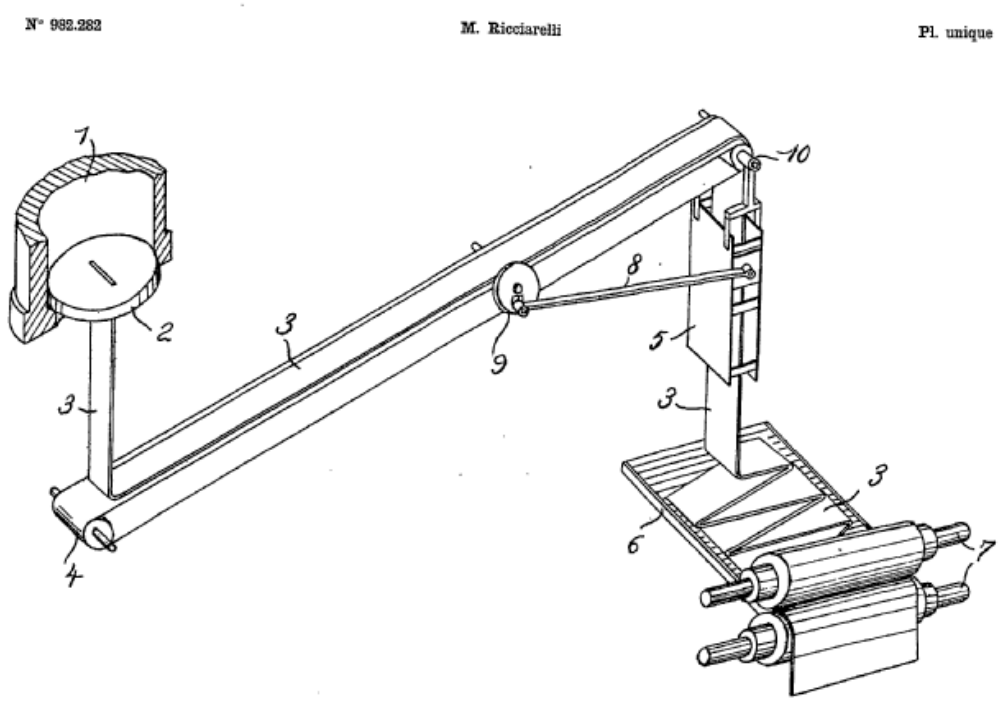

References

Informative references

Attention is drawn to the following places, which may be of interest for search:

Shaping composites; positioning reinforcements in a mould	B29C 70/54

B29C 31/10

of several materials

Definition statement

This place covers:

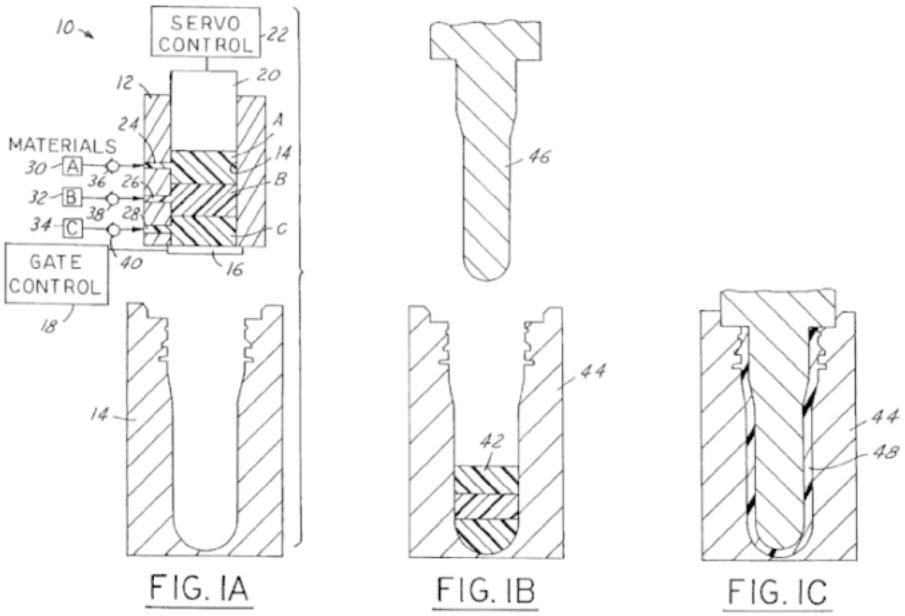

FIG. IA FIG. IB FIG. IC

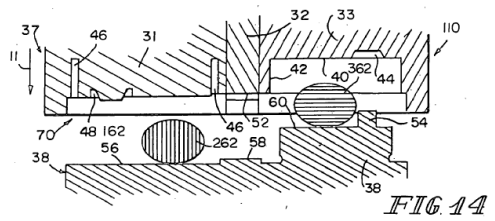

FIG. 14

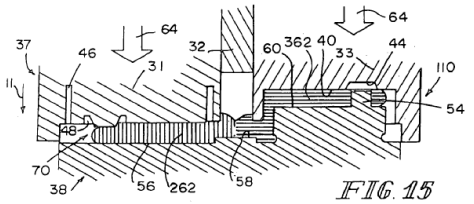

FIG. 15

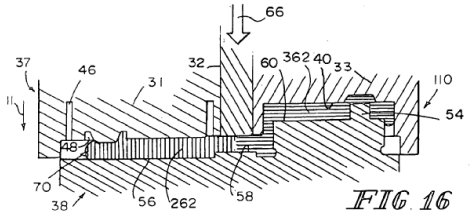

FIG. 16

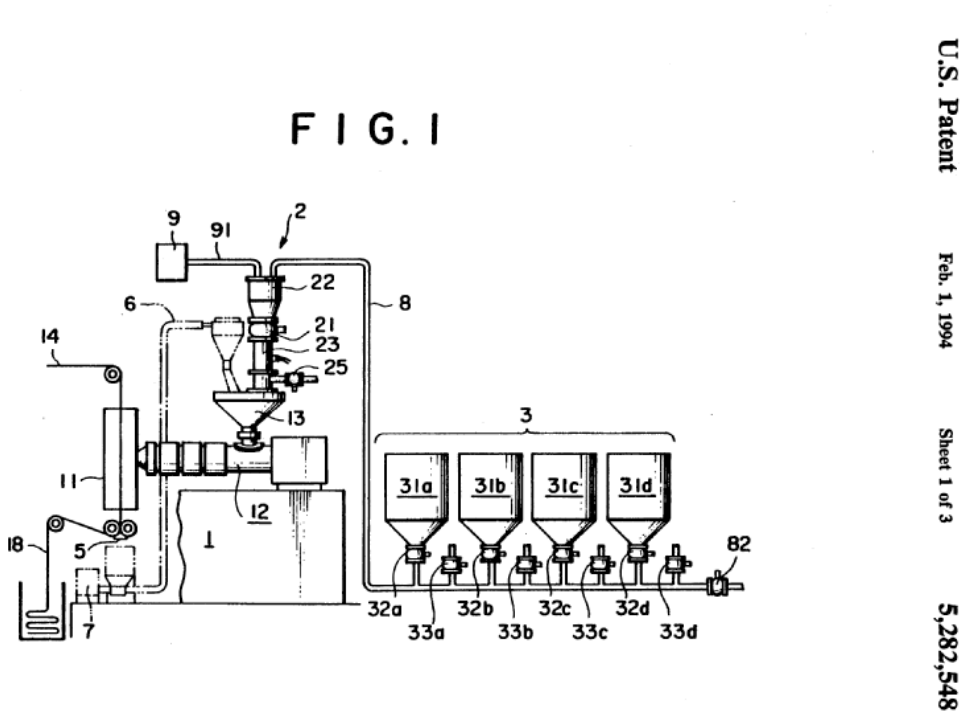

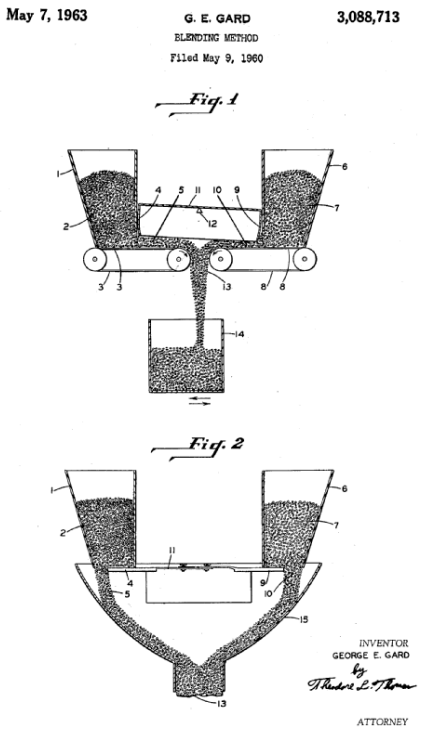

B29C 33/00

Moulds or cores; Details thereof or accessories therefor

Definition statement

This place covers:

Moulds or dies being the tool used to shape the plastic parts in moulding processes in its desired form. A mould typically comprises a cavity to shape a plastic part.

Rolls used in continuous moulding processes

Making of moulds

Designing moulds.

Relationships with other classification places

The scope of B29C 33/00 is limited to moulds for shaping substances being in a plastic state

Moulds for shaping other substances are not covered by this class, but by the class in their field of application

References

Limiting references

This place does not cover:

Moulds for making tyres	B29D 30/0606

Informative references

Attention is drawn to the following places, which may be of interest for search:

Moulds for pressure die casting	B22D 17/22
Moulds for shaping clay or other ceramic products	B28B 7/34

Special rules of classification

Moulds specific for a single moulding technology are classified in that technology: e.g. moulds for injection moulding B29C 45/26, moulds for blow moulding B29C 49/48.

Since the classification scheme present in B29C 45/00 is much more detailed, for reasons of search efficiency, classification in B29C 45/00 is preferred above a classification in B29C 33/00 in the case that both classifications would be applicable.

Synonyms and Keywords

In patent documents, the following words/expressions are often used as synonyms:

- "Mould"," mold" and "die"

B29C 33/04

using liquids, gas or steam {(tyre moulds with incorporated heating or cooling means using liquids, gas or steam B29D 30/0601)}

References

Informative references

Attention is drawn to the following places, which may be of interest for search:

heating using liquids, gas or steam in presses	B30B 15/064

B29C 33/3842

{Manufacturing moulds, e.g. shaping the mould surface by machining}

Definition statement

This place covers:

Making of moulds made out of a plastic substance. The application of the created mould, does not necessarily need to be in the field of B29C

References

Limiting references

This place does not cover:

Making of moulds by metal processing	B22, B23, in particular B23P 15/24

Informative references

Attention is drawn to the following places, which may be of interest for search:

Mould materials, implicitly disclosed by the process of making them	B29C 33/38, B29C 33/40, B29C 33/565

B29C 2033/385

{by laminating a plurality of layers}

References

Informative references

Attention is drawn to the following places, which may be of interest for search:

Modular mould systems [MMS], e.g. plates, blocks, rods in general	B29C 33/301
Constructional features of the moulds for pneumatic tyres, the moulds being made of a plurality of laminations	B29D 2030/0609

B29C 33/442

{with mechanical ejector or drive means therefor}

References

Limiting references

This place does not cover:

Mechanical ejectors for injection moulding	B29C 45/4005

B29C 33/444

{for stripping articles from a mould core, e.g. using stripper plates}

References

Informative references

Attention is drawn to the following places, which may be of interest for search:

Discharging by stripping articles from cores	B29C 37/0003

B29C 33/56

Coatings {, e.g. enameled or galvanised}; Releasing, lubricating or separating agents {(in-mould coating B29C 37/0028; using or applying separating agents B29C 37/0067)}

References

Informative references

Attention is drawn to the following places, which may be of interest for search:

Coating compositions	C09D
Lubricating compositions	C10M

B29C 35/00

Heating, cooling or curing, e.g. crosslinking or vulcanising; Apparatus therefor (moulds with incorporated heating or cooling means B29C 33/02 {; thermal after-treatment of shaped articles B29C 71/02}; curing devices for plastics dental prostheses A61C 13/14; before moulding B29B 13/00)

References

Limiting references

This place does not cover:

Moulds with incorporated heating or cooling means	B29C 33/02
Thermal after-treatment of shaped articles	B29C 71/02
Curing devices for plastic dental prostheses	A61C 13/14
Thermal treatment of the material to be shaped before moulding	B29B 13/00
Conditioning or physical treatment of the material to be shaped	B29B 13/00

Informative references

Attention is drawn to the following places, which may be of interest for search:

Crosslinking of macromolecular substances	C08J 3/24

B29C 35/007

{Tempering units for temperature control of moulds or cores, e.g. comprising heat exchangers, controlled valves, temperature-controlled circuits for fluids (B29C 35/0294 takes precedence)}

Definition statement

This place covers:

Patent Application Publication Jan. 14, 2010 Sheet 2 of 5 US 2010/0007038 A1

FIG.2

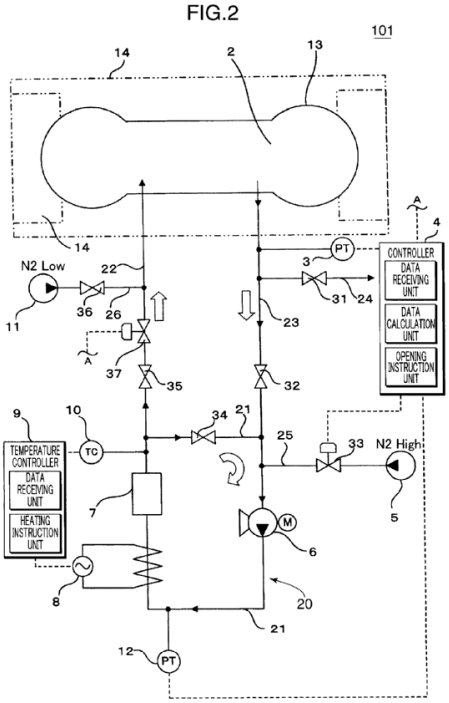

Patent Application Publication Aug. 9, 2007 Sheet 12 of 17 US 2007/0184139 A1

FIG. 14

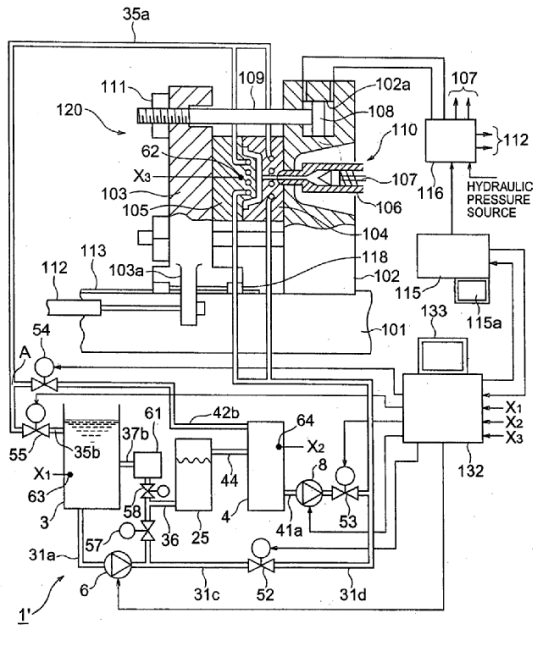

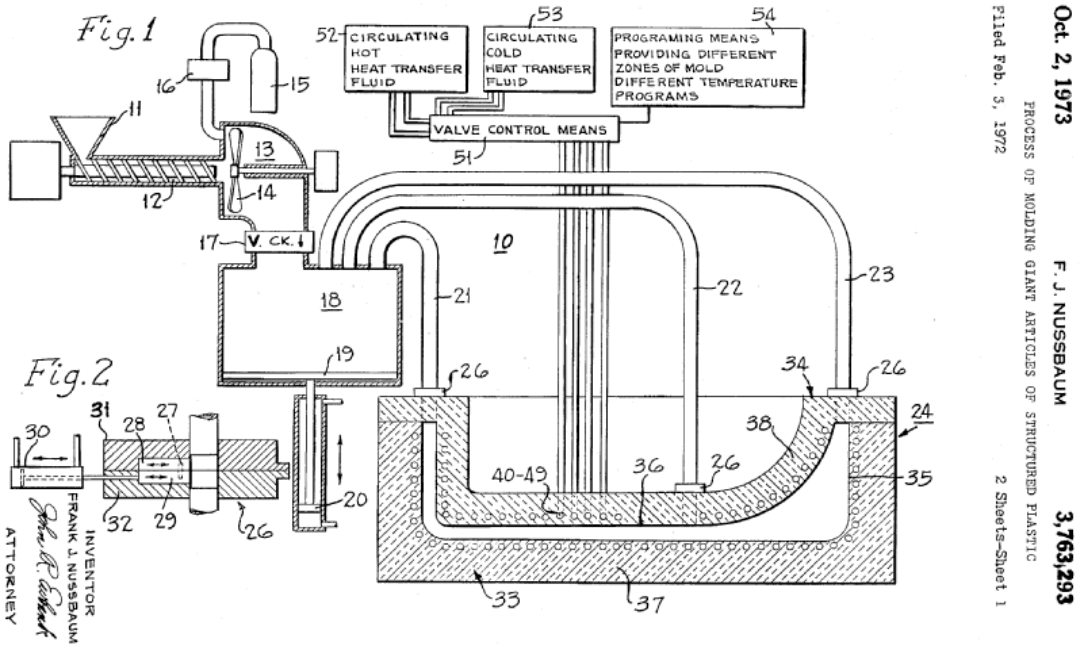

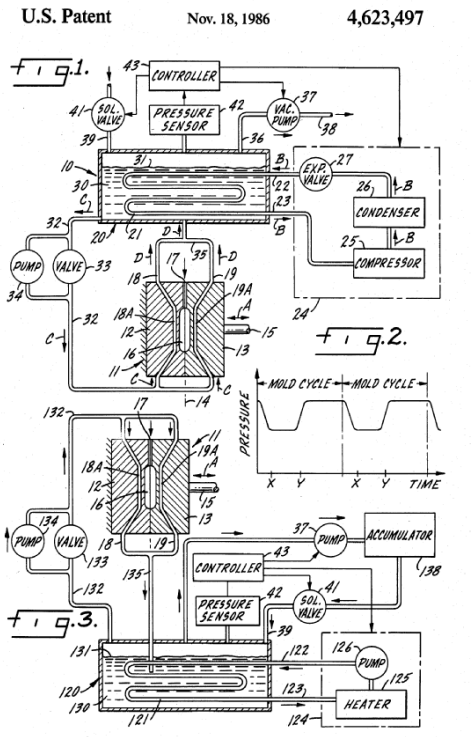

References

Informative references

Attention is drawn to the following places, which may be of interest for search:

Moulds or cores with incorporated heating or cooling mean, using liquids, gas or steam	B29C 33/04
Injection moulding, heating or cooling of the mould, control circuit therefor	B29C 45/7306

B29C 35/02

Heating or curing, e.g. crosslinking or vulcanizing {during moulding, e.g. in a mould} (cold vulcanisation B29C 35/18 {; vulcanising tyres, presses therefor B29D 30/0601})

References

Informative references

Attention is drawn to the following places, which may be of interest for search:

Moulds or cores with incorporated heating or cooling means	B29C 33/02
Shaping by casting, heating or cooling	B29C 39/38
Shaping by coating, heating or cooling	B29C 41/46
Compression moulding, heating or cooling	B29C 43/52
Shaping by swelling, foaming, heating or cooling	B29C 44/3415
Injection moulding, heating or cooling	B29C 45/72
Extrusion moulding, heating	B29C 48/78
Blow-moulding, heating or cooling	B29C 49/64
Shaping by thermoforming, heating or cooling	B29C 51/42
Shaping by bending, folding, heating or cooling	B29C 53/84
Lining or sheathing, heat treatment	B29C 63/0065
Producing pneumatic tyres, vulcanising tyres, vulcanising presses for tyres	B29D 30/0601
Heating or cooling presses or parts therefor	B30B 15/34

B29C 35/0227

{using pressure vessels, e.g. autoclaves, vulcanising pans (B29C 35/065 takes precedence)}

Definition statement

This place covers:

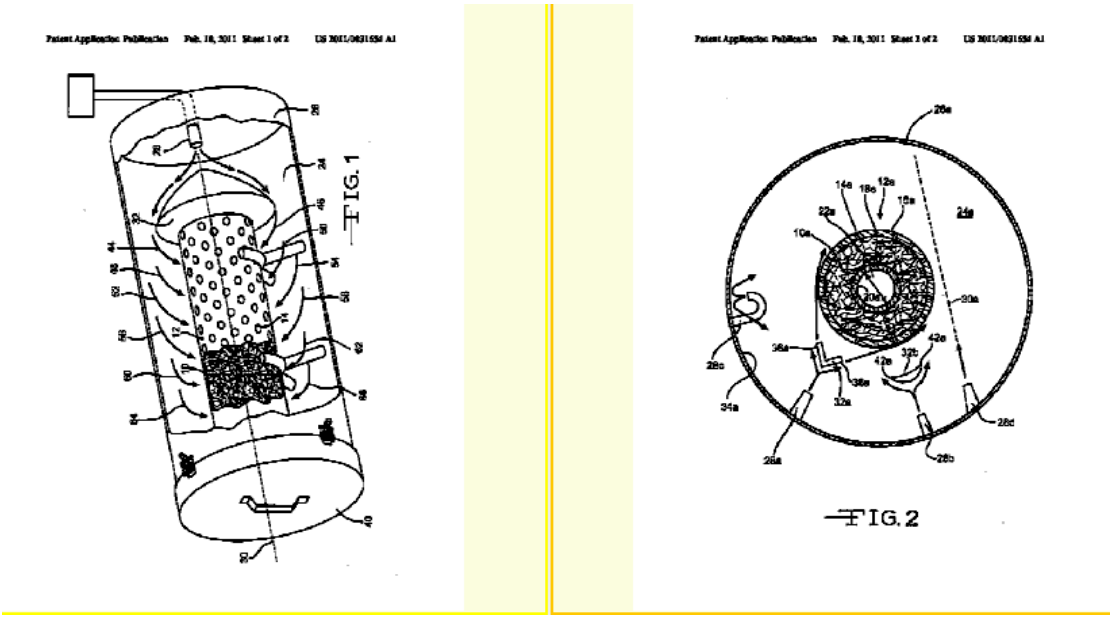

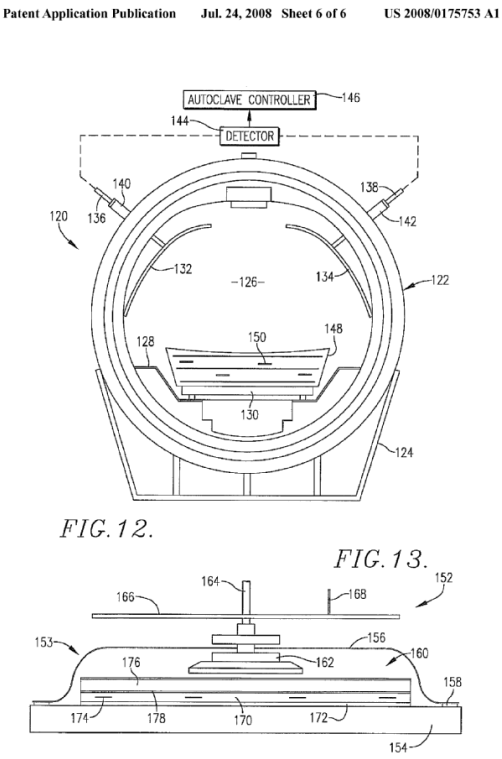

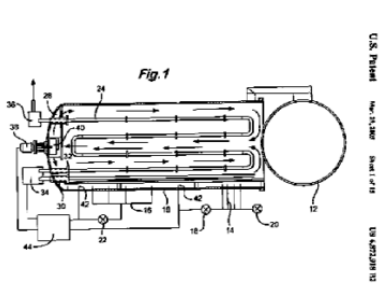

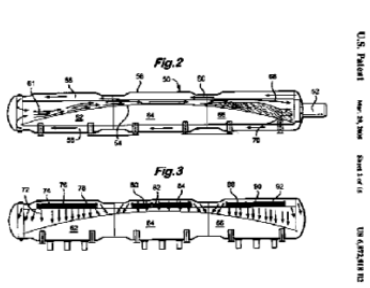

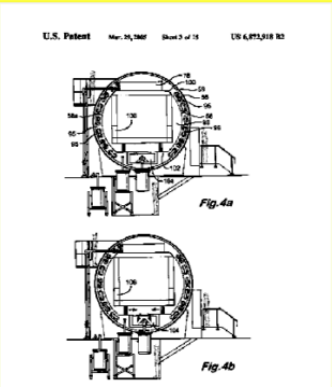

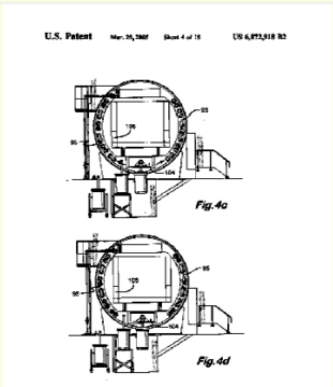

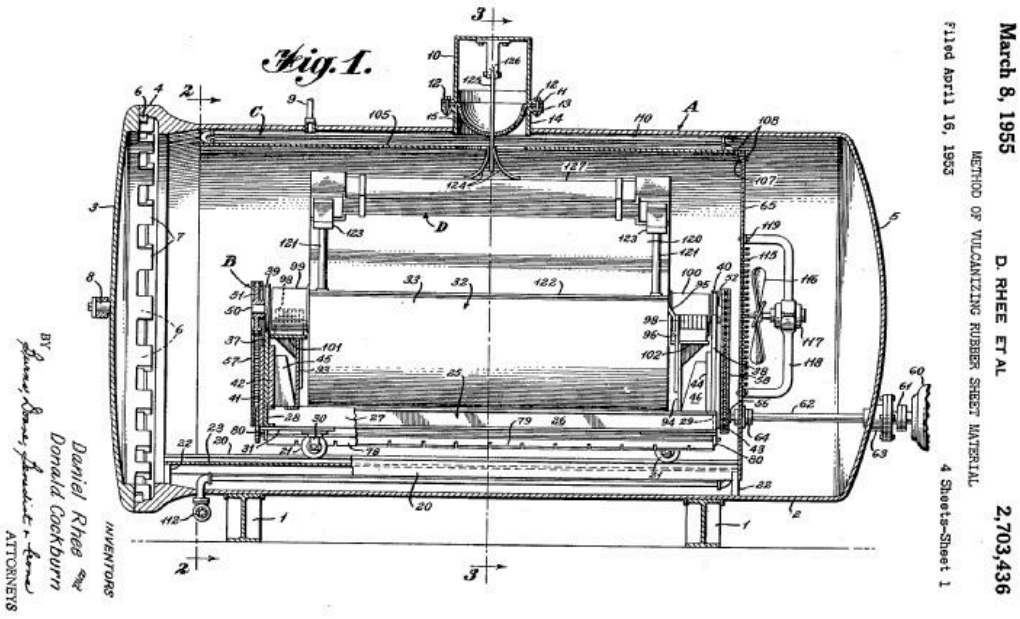

References

Informative references

Attention is drawn to the following places, which may be of interest for search:

Shaping composites, using isostatic pressure, e.g. autoclave	B29C 70/44
Processes of utilising sub-atmospheric or super-atmospheric pressure to effect chemical or physical change of matter, pressure vessels, autoclaves	B01J 3/04

B29C 35/0238

{Presses provided with pressure vessels, e.g. steam chambers}

Definition statement

This place covers:

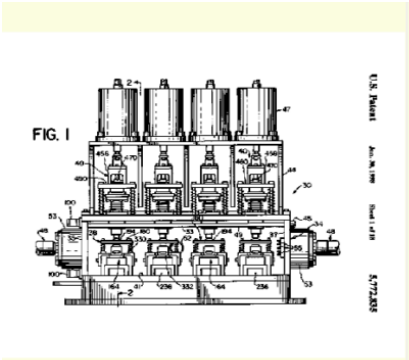

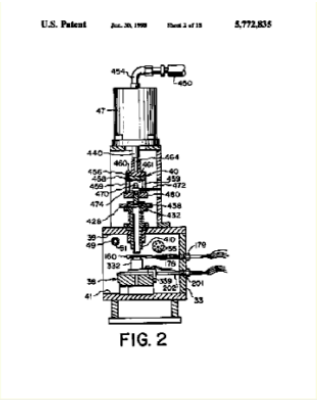

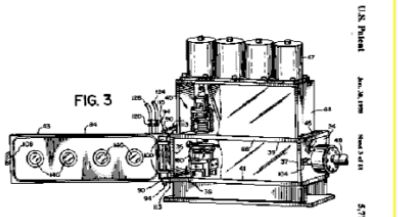

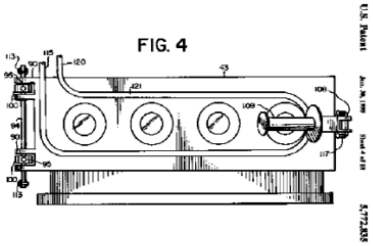

B29C 35/0244

{using fluidised bed}

Definition statement

This place covers:

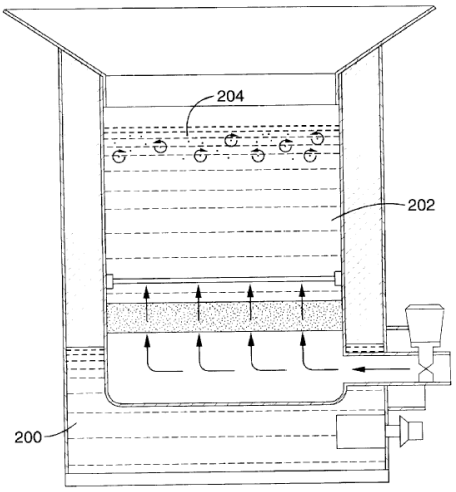

FIG. 5

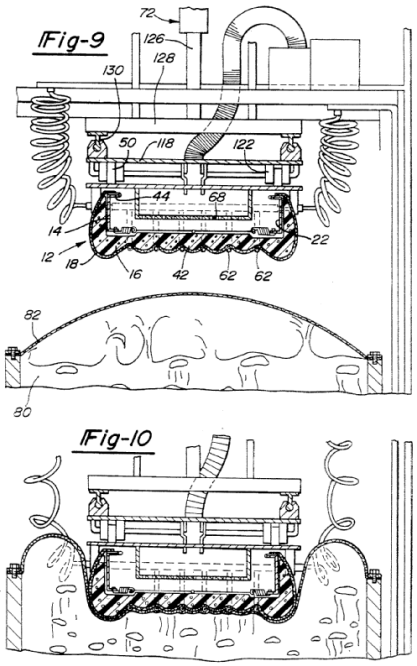

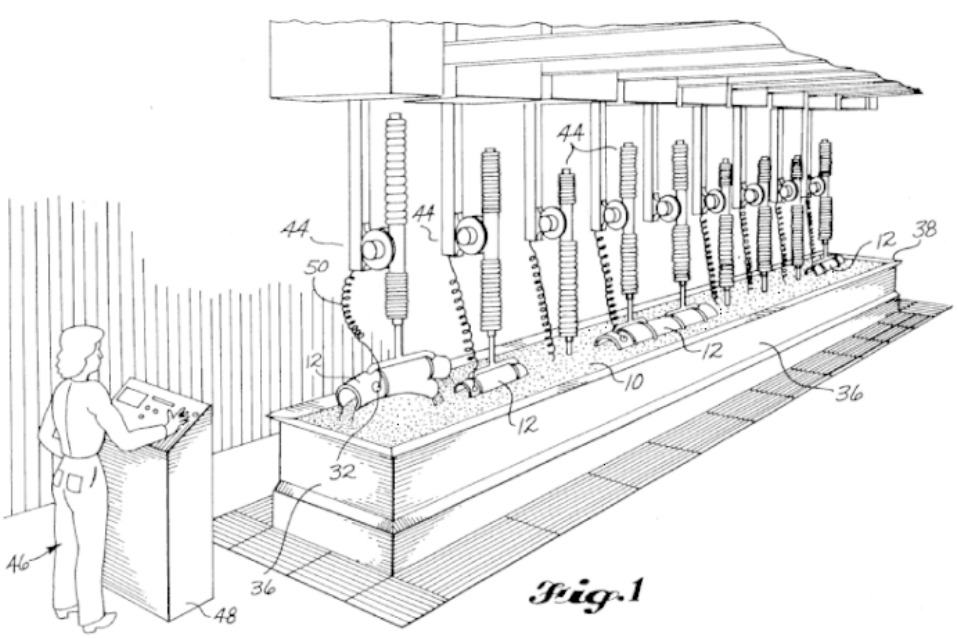

Fig. 1

References

Informative references

Attention is drawn to the following places, which may be of interest for search:

Chemical or physical process in general, conducted in the presence of fluids and solid particles, with fluidised particles, according to "fluidised bed" technique	B01J 8/24

B29C 35/025

{for articles of indefinite length}

Definition statement

This place covers:

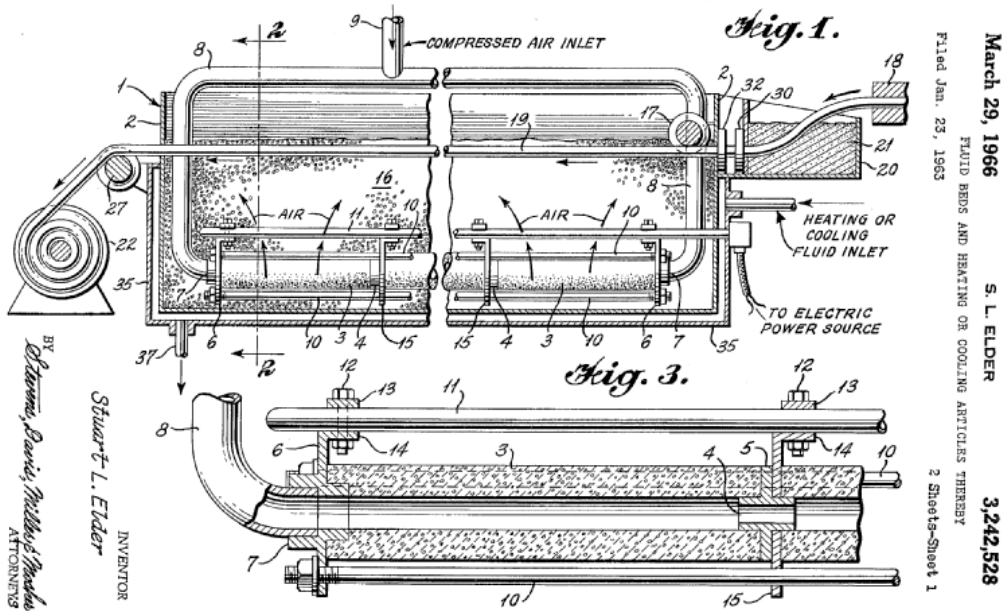

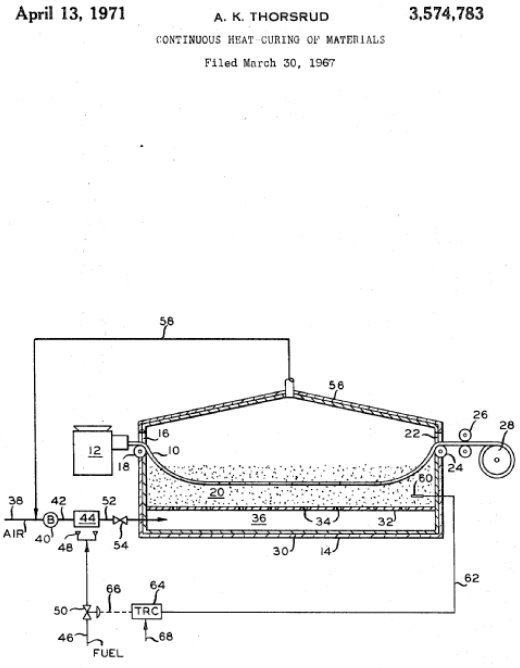

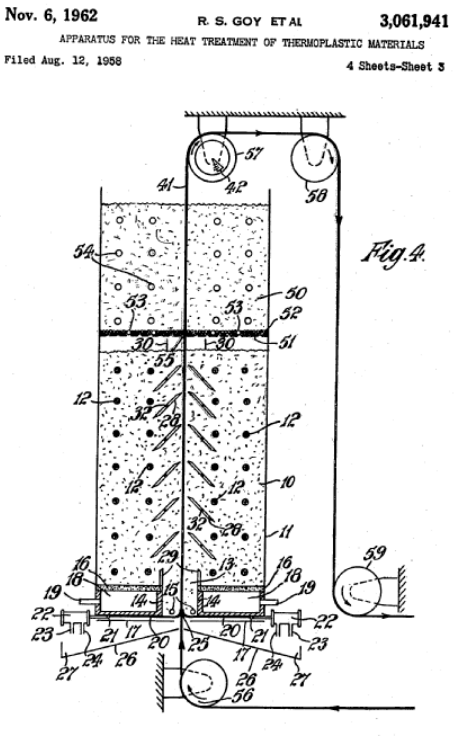
Nov. 6, 1962 R. S. GOY ET AL 3,061,941
APPARATUS FOR THE HEAT TREATMENT OF THERMOPLASTIC MATERIALS
Filed Aug. 12, 1958 4 Sheets-Sheet 3
Fig. 4.

References

Informative references

Attention is drawn to the following places, which may be of interest for search:

Chemical or physical process in general, conducted in the presence of fluids and solid particles, with fluidised particles, according to "fluidised bed" technique, for treatment of endless filamentary, band or sheet material	B01J 8/46

B29C 35/0255

{using friction}

References

Informative references

Attention is drawn to the following places, which may be of interest for search:

Joining of preformed parts, by heating, using friction	B29C 65/06

B29C 35/0261

{using ultrasonic or sonic vibrations}

Definition statement

This place covers:

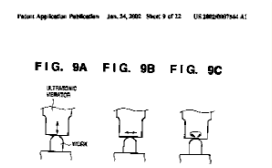

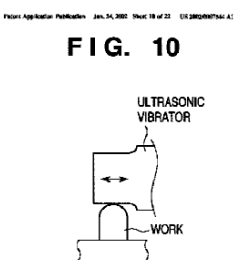

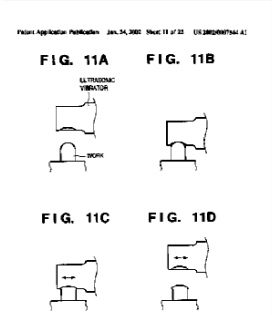

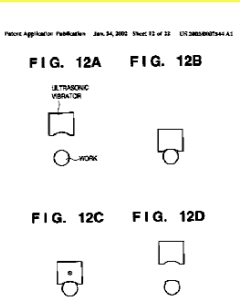

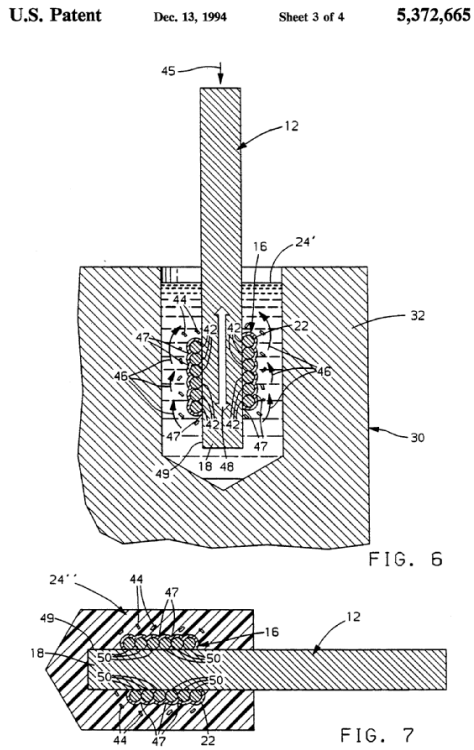

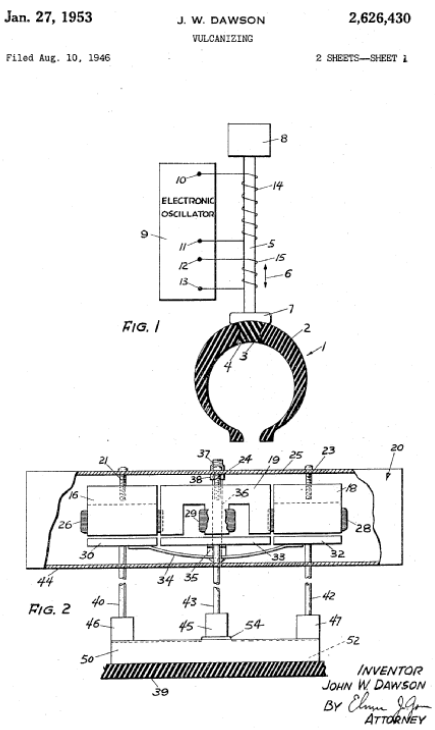

References

Informative references

Attention is drawn to the following places, which may be of interest for search:

Joining of preformed parts, by heating, using ultrasonic vibrations	B29C 65/08
Chemical, physical or physico-chemical processes in general, employing sonic or ultrasonic vibrations	B01J 19/10

B29C 35/0266

{Local curing (for repairing B29C 73/34)}

Definition statement

This place covers:

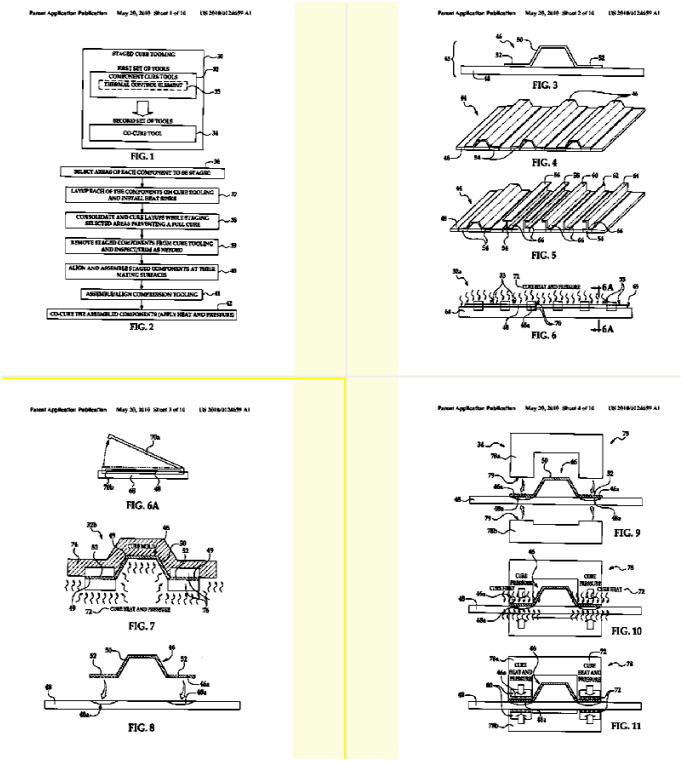

Patent Application Publication Oct. 29, 2009 Sheet 8 of 8 US 2009/0267264 A1

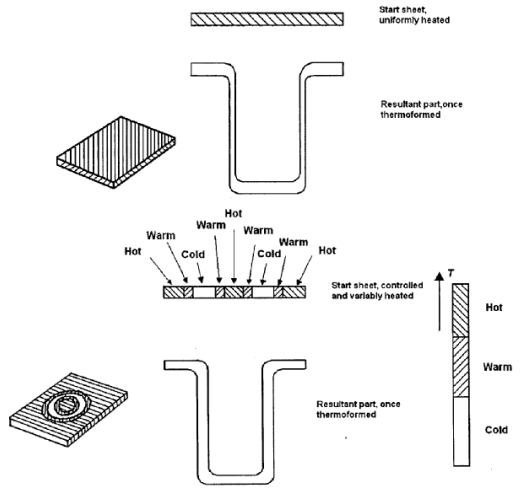

FIG. 9

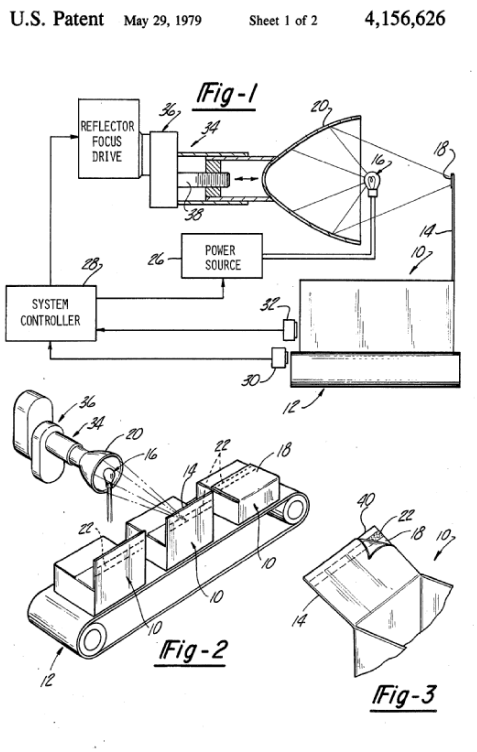

B29C 35/0272

{using lost heating elements, i.e. heating means incorporated and remaining in the formed article (for preforms with internal stresses B29C 61/0625; joining using lost heating elements B29C 65/34; making electrically conductive articles B29C 70/882)}

References

Informative references

Attention is drawn to the following places, which may be of interest for search:

Shaping by liberation of internal stresses, making preforms comprising incorporated or associated heating means	B29C 61/0625
Joining of preformed parts, by heating, using heated elements which remain in the joint	B29C 65/34

B29C 35/0277

{Apparatus with continuous transport of the material to be cured (B29C 35/025, B29C 35/06, B29C 35/10, B29C 35/14 take precedence)}

Definition statement

This place covers:

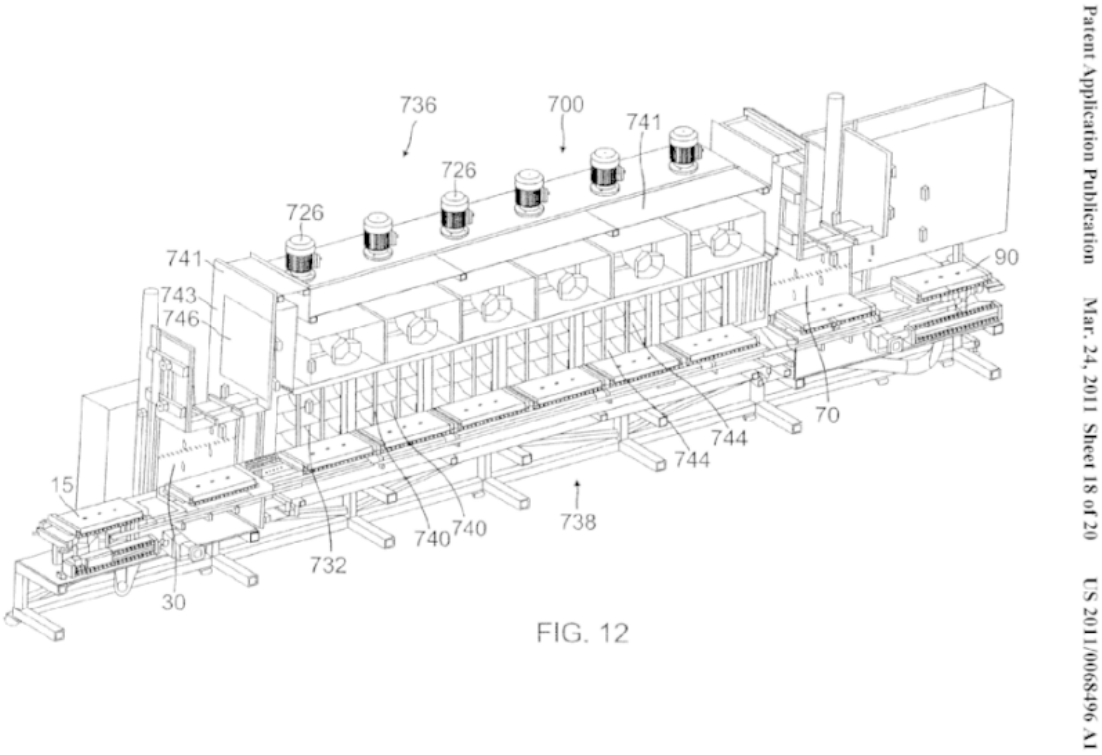

FIG. 12

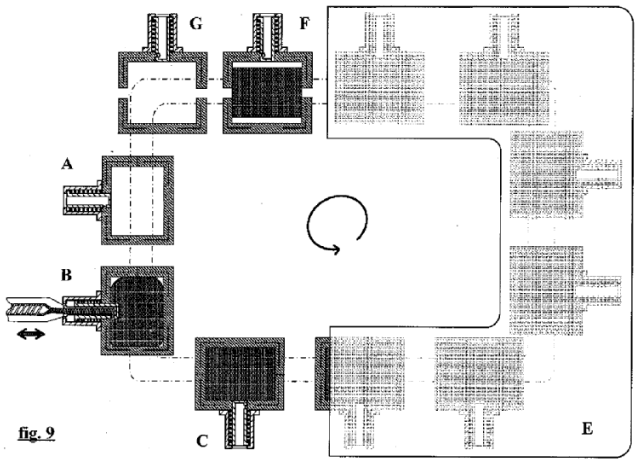

U.S. Patent Oct. 13, 1981 Sheet 2 of 2 4,294,790

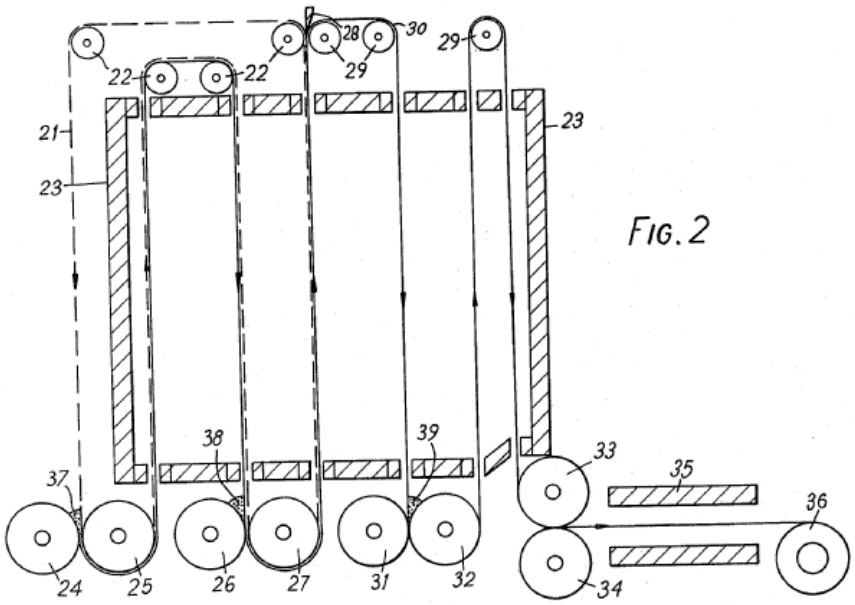

FIG. 2

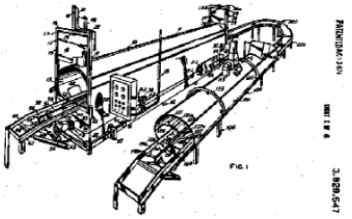

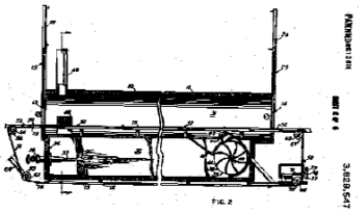

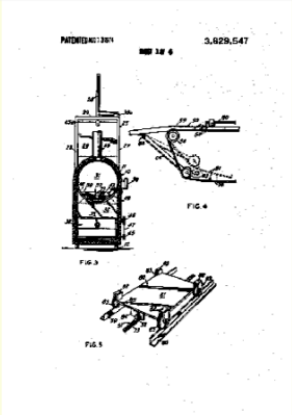

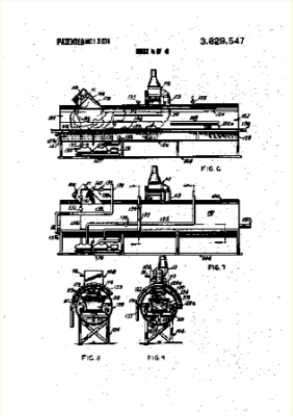

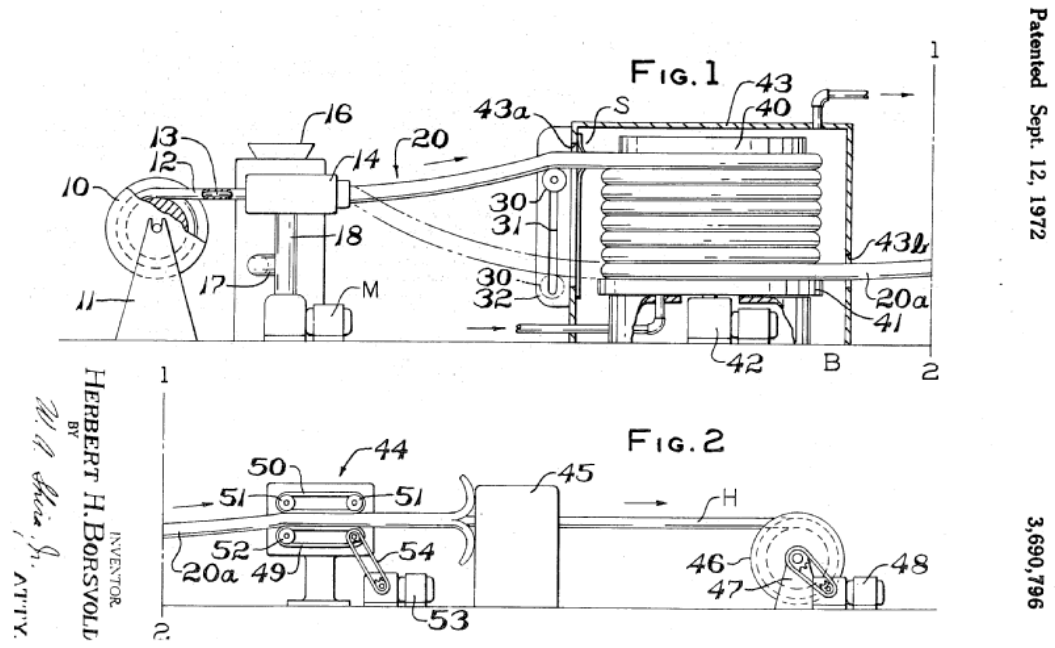

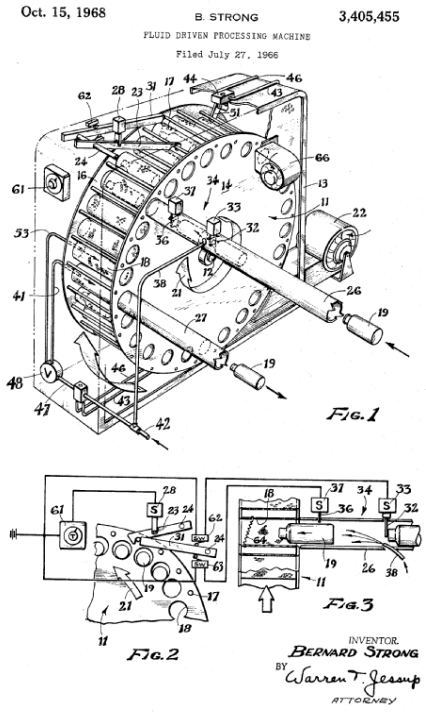

References

Informative references

Attention is drawn to the following places, which may be of interest for search:

Movable moulds or cores	B29C 33/34
Continuously movable moulds or cores	B29C 33/36

B29C 2035/0283

{Thermal pretreatment of the plastics material}

References

Informative references

Attention is drawn to the following places, which may be of interest for search:

Thermal after-treatment of articles without altering their shape	B29C 71/02

B29C 35/0288

{Controlling heating or curing of polymers during moulding, e.g. by measuring temperatures or properties of the polymer and regulating the process (controlling or regulating chemical, physical or physico- chemical processes in general B01J 19/0006)}

Definition statement

This place covers:

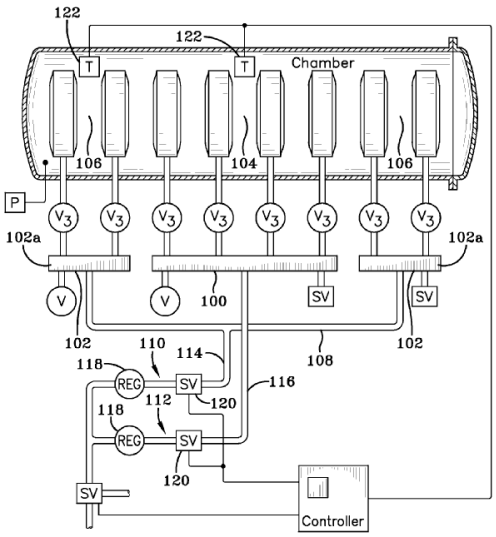

FIG−4

Patent Application Publication Jun. 10, 2010 Sheet 2 of 7 US 2010/0140842 A1

FIG. 3

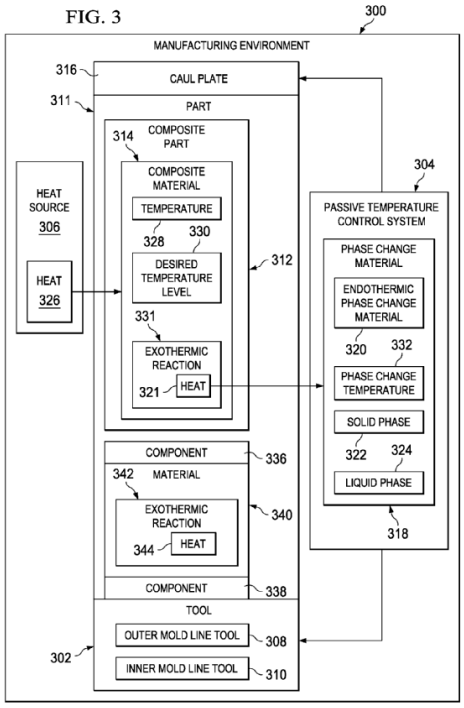

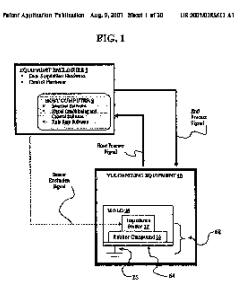

FIG. 1

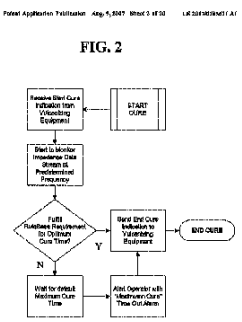

FIG. 2

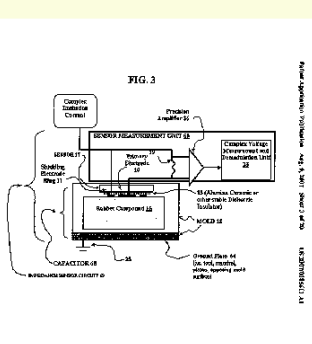

FIG. 3

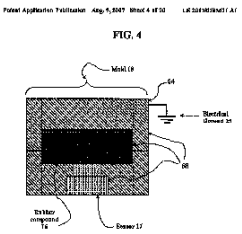

FIG. 4

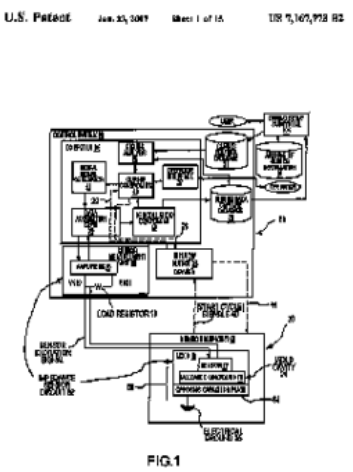

FIG.1

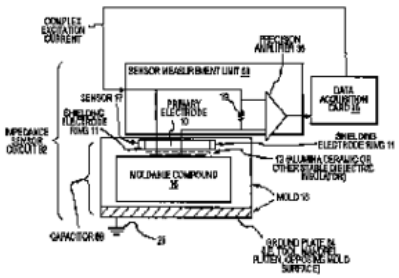

FIG.2

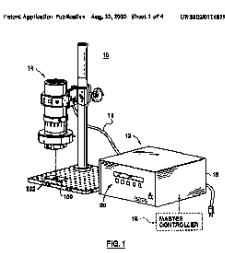

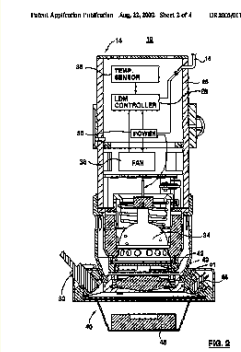

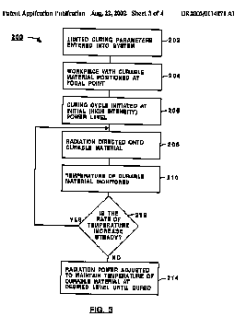

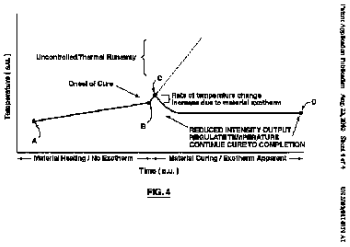

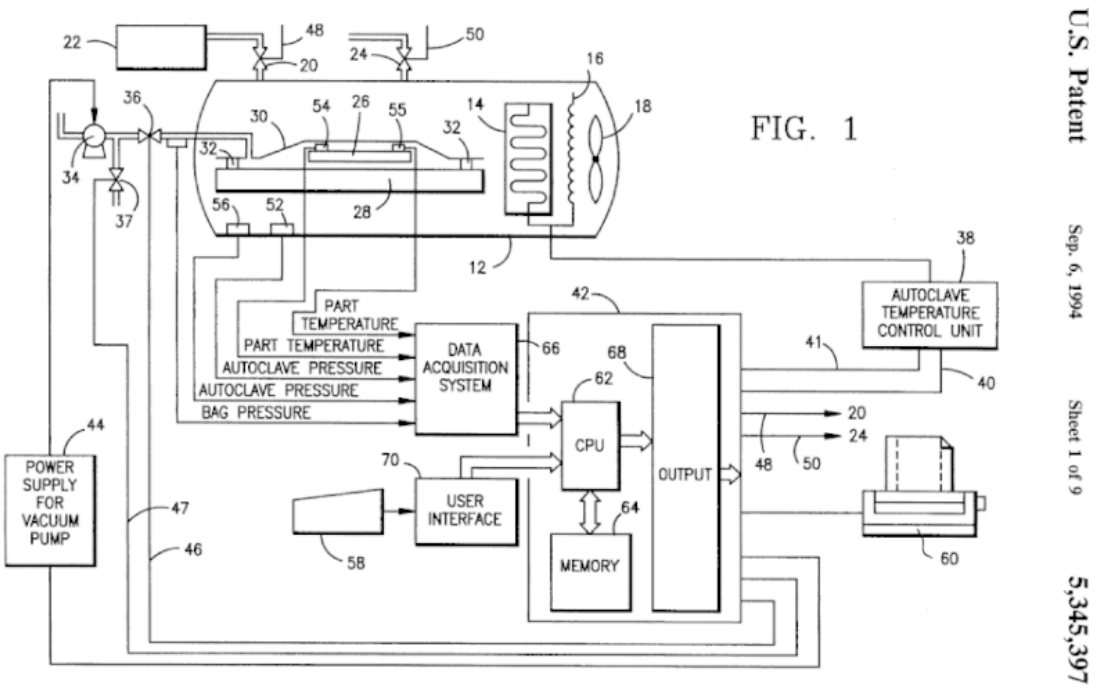

References

Informative references

Attention is drawn to the following places, which may be of interest for search:

Shaping by casting, measuring, controlling or regulating	B29C 39/44
Shaping by coating, measuring, controlling or regulating	B29C 43/58
Compression moulding, measuring, controlling or regulating Shaping by swelling, foaming, measuring, controlling or regulating	B29C 44/60
Injection moulding, measuring, controlling or regulating of temperature	B29C 45/78
Extrusion moulding, measuring, controlling or regulating	B29C 48/92
Blow-moulding, measuring, controlling or regulating	B29C 49/78
Shaping by thermoforming, measuring, controlling or regulating	B29C 51/46

B29C 35/0294

{using tempering units for temperature control of moulds or cores}

Definition statement

This place covers:

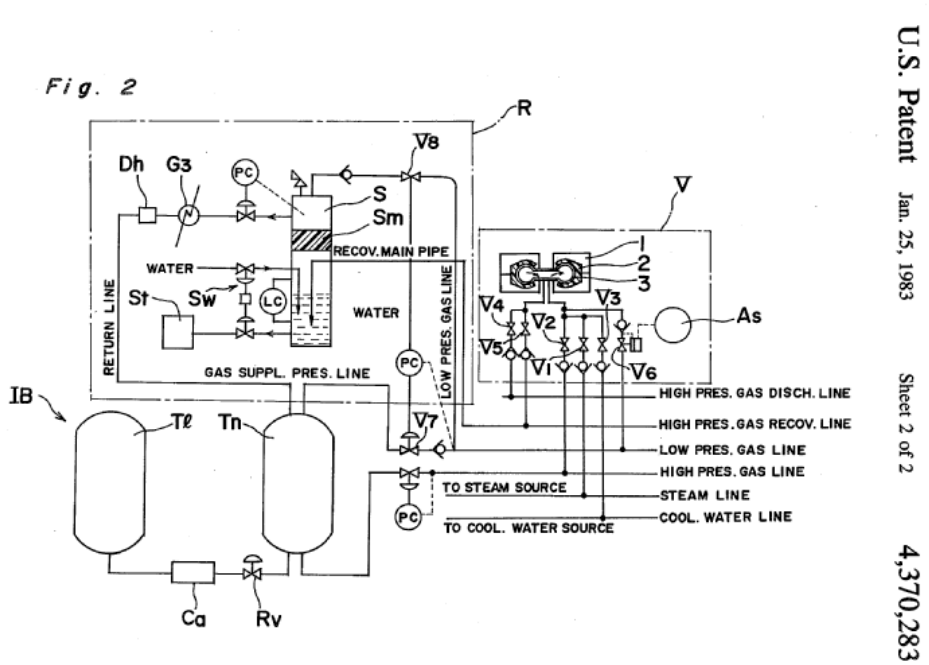

U.S. Patent Jan. 25, 1983 Sheet 2 of 2 4,370,283

B29C 35/04

using liquids, gas or steam

References

Informative references

Attention is drawn to the following places, which may be of interest for search:

Joining of preformed parts; e.g. welding of plastics materials; making use of hot liquids, i.e. the liquid is in contact with the material to be joined	B29C 65/026
Joining of preformed parts; e.g. welding of plastics materials; using hot gases	B29C 65/10
Joining of preformed parts; e.g. welding of plastics materials; using flames	B29C 65/106

B29C 35/041

{using liquids}

Definition statement

This place covers:

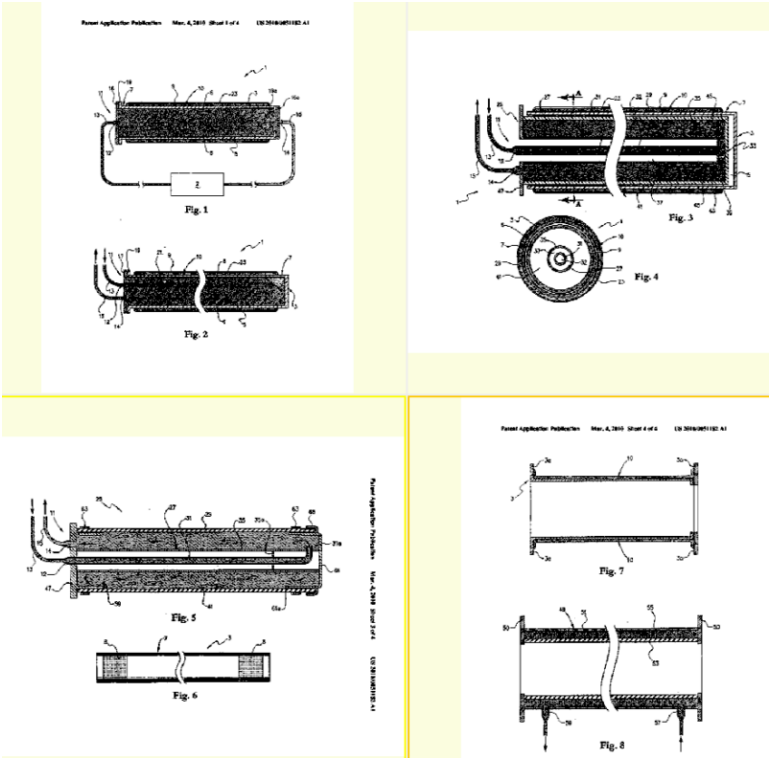

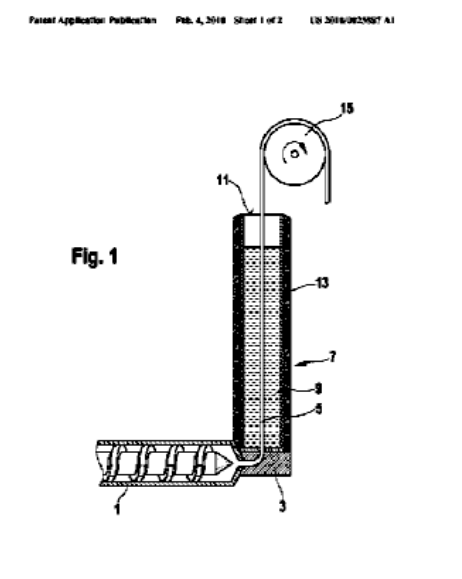

B29C 35/06

for articles of indefinite length

Definition statement

This place covers:

U.S. Patent Sep. 21, 1993 Sheet 1 of 4 5,246,752

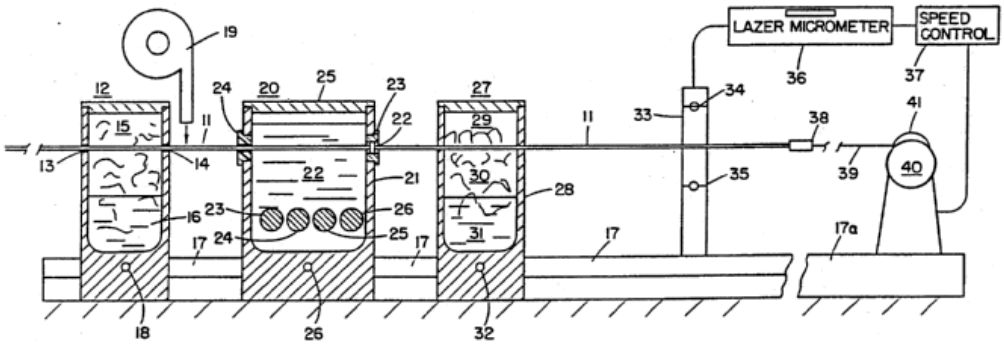

FIG. 1

Jan. 22, 1974 R. R. SPENCER ET AL 3,787,552
METHOD AND APPARATUS FOR FORMING THINWALLED TUBULAR ARTICLES
Filed Dec. 21, 1970 2 Sheets-Sheet 1

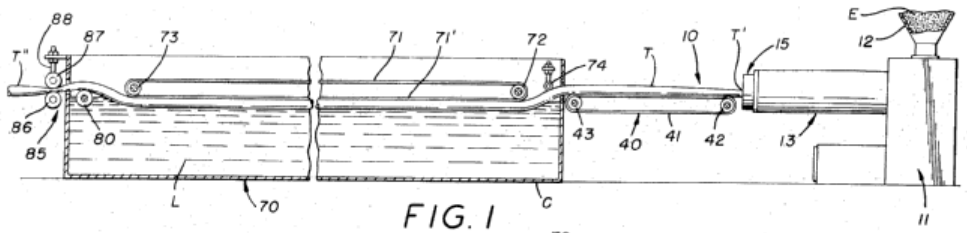

FIG. 1

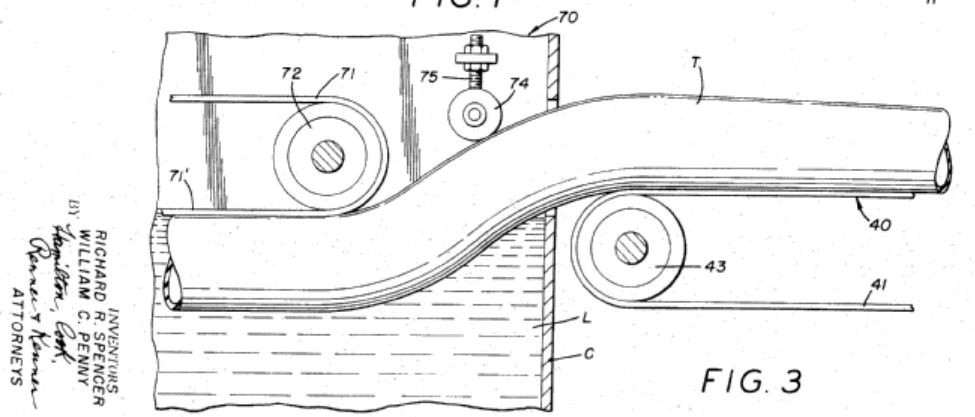

FIG. 3

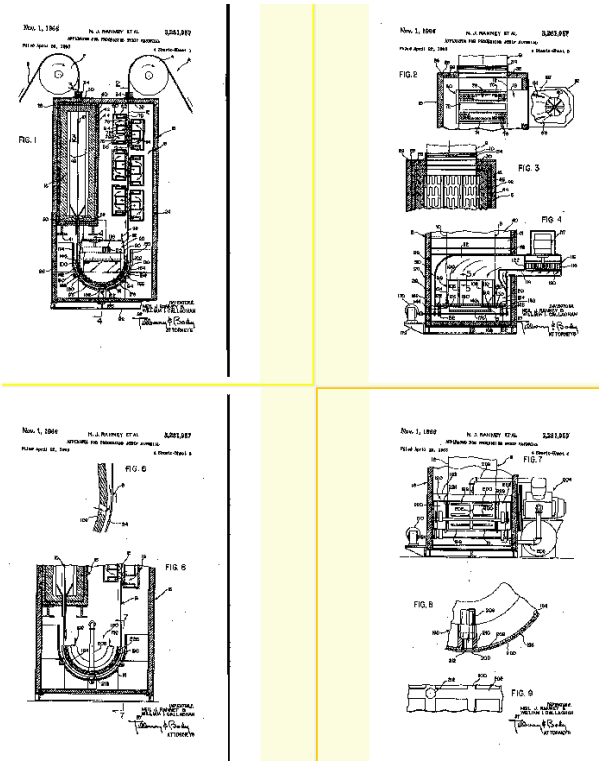

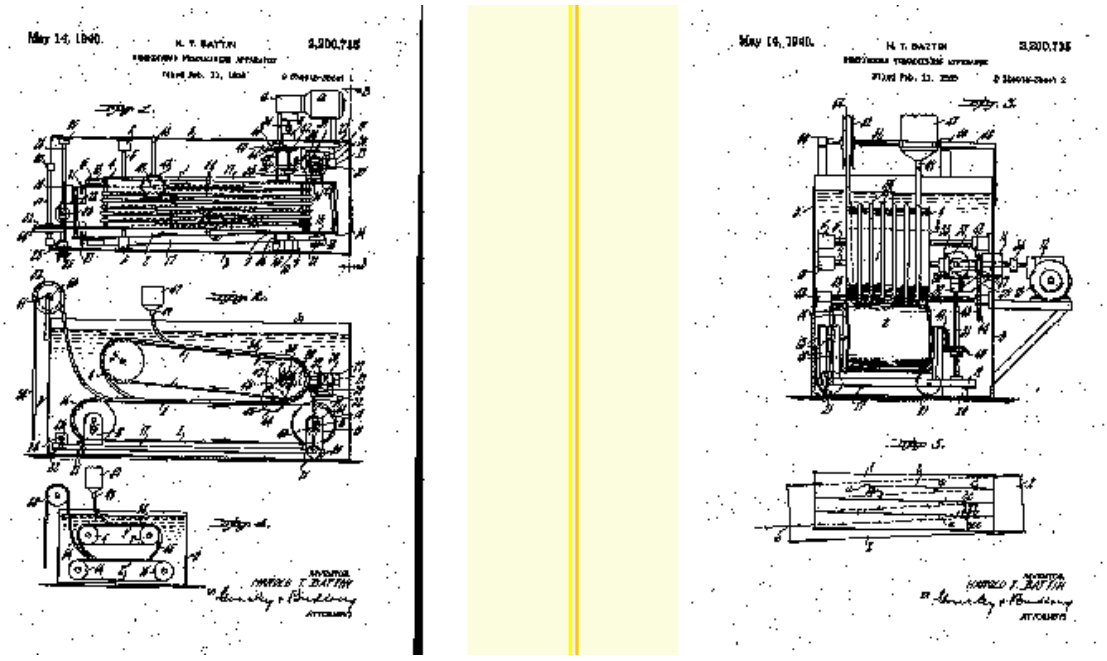

References

Informative references

Attention is drawn to the following places, which may be of interest for search:

Extrusion moulding; heating the stream of extruded material	B29C 48/91

B29C 35/065

{in long tubular vessels}

Definition statement

This place covers:

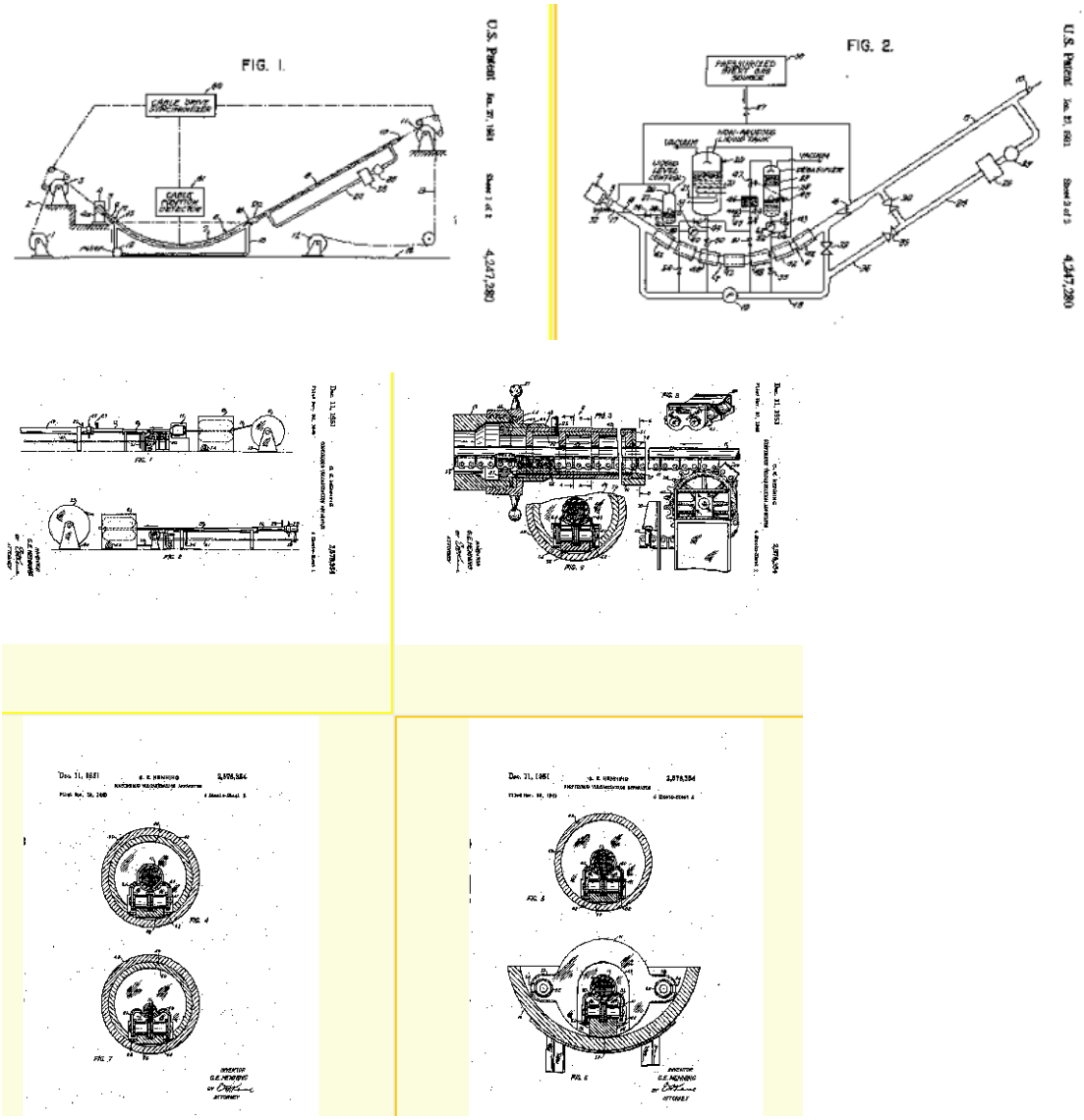

B29C 35/08

by wave energy or particle radiation {([B29C 64/00](), [B29C 71/04]() take precedence)}

References

Informative references

Attention is drawn to the following places, which may be of interest for search:

Using wave energy for welding	[B29C 65/14]()
Using laser for welding	[B29C 65/16]()

Using induction heating for welding	B29C 65/3656, B29C 65/36
Dental auxiliary appliances, apparatus for curing resin by radiation	A61C 19/003
Chemical, physical or physico-chemical processes in general, employing particle radiation or gamma-radiation	B01J 19/081
Chemical, physical or physico-chemical processes in general, employing electromagnetic waves	B01J 19/12
Producing optical elements, curing the lens material	B29D 11/00442
Processes of treating or compounding macromolecular substances, treament by wave energy or particle radiation	C08J 3/28
Irradiation devices	G21K 5/00
Induction heating	H05B 6/02

B29C 35/0805

{using electromagnetic radiation}

Definition statement

This place covers:

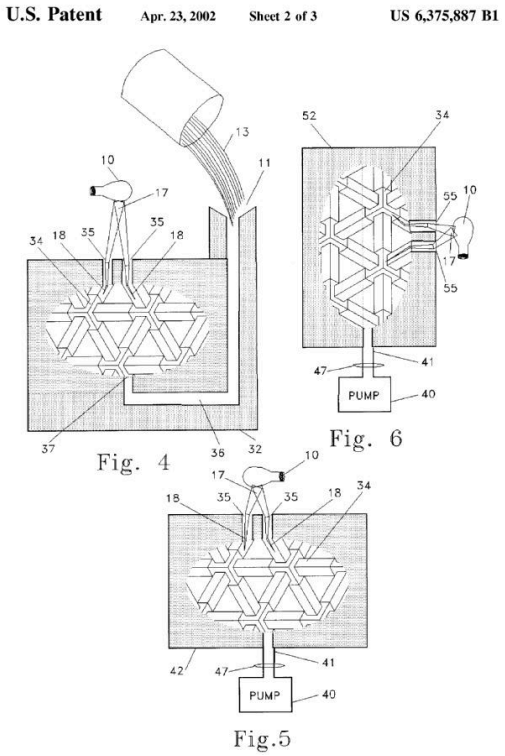

U.S. Patent Oct. 8, 2002 Sheet 1 of 2 US 6,462,884 B2

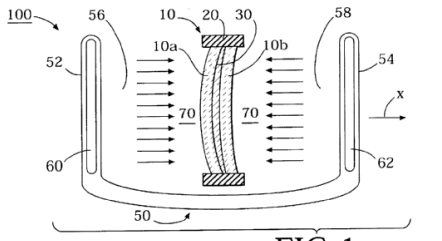

FIG 1

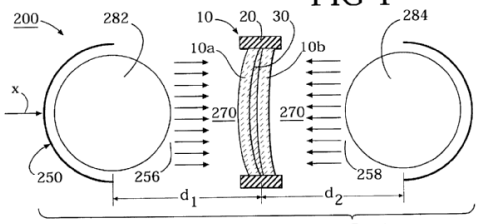

FIG 2

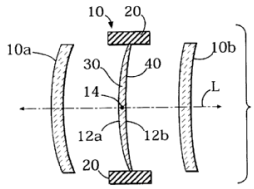

FIG 3

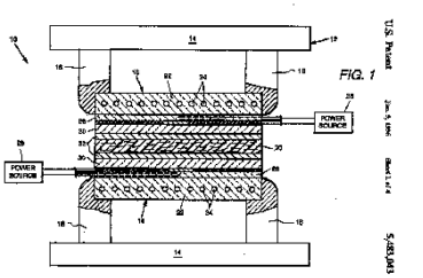

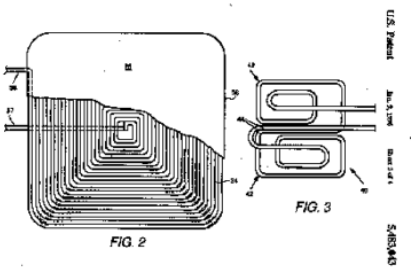

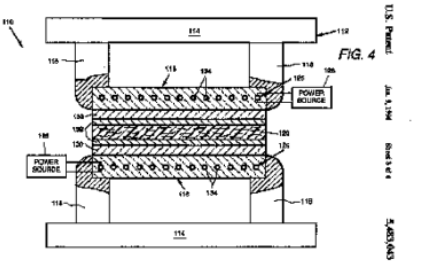

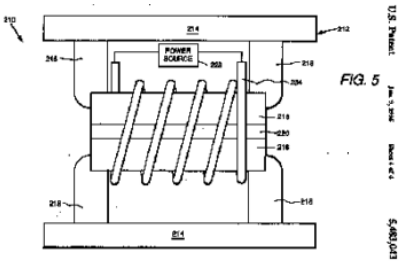

B29C 35/0888

{using transparant moulds}

Definition statement

This place covers:

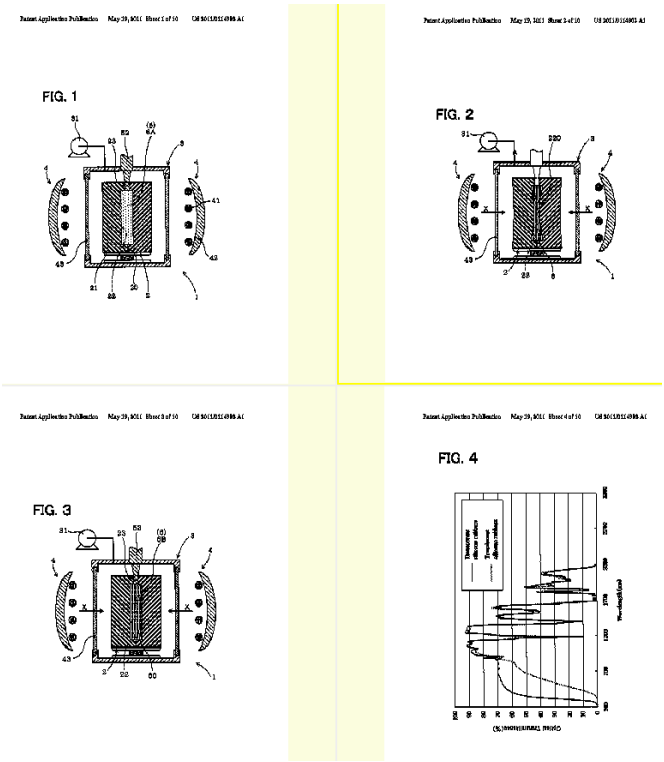

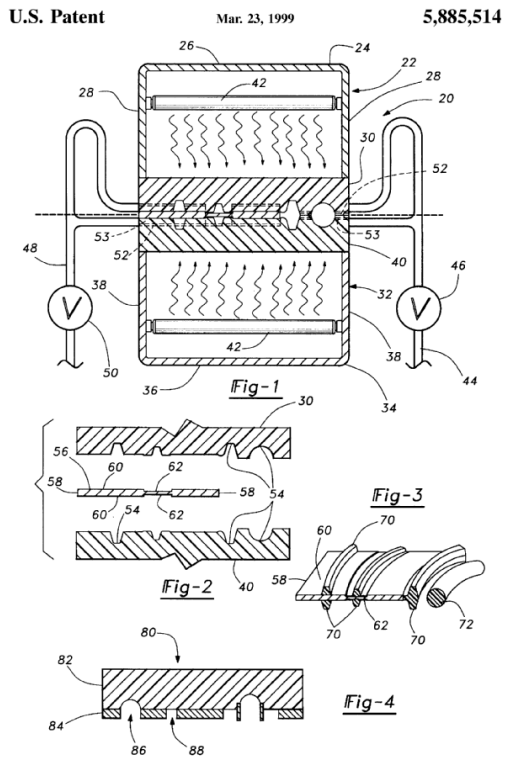

References

Informative references

Attention is drawn to the following places, which may be of interest for search:

Producing optical elements, curing the lens material	B29D 11/00442
Photomecanical, e.g. photolithographic, production of textured or patterned surfaces, lithigraphic processes using patterning methods other than those involving the exposure to radiation, e.g. by stamping	G03F 7/0002

B29C 35/0894

{provided with masks or diaphragms}

Definition statement

This place covers:

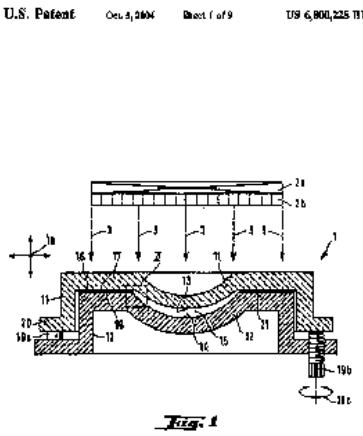

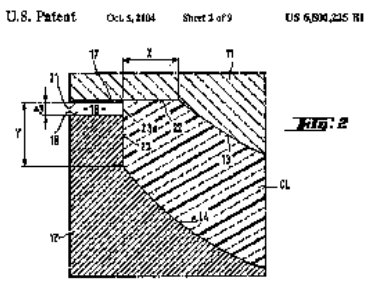

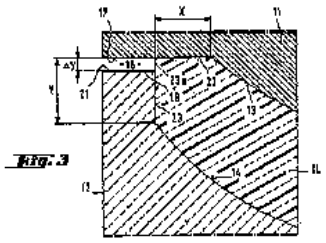

B29C 35/10

for articles of indefinite length

Definition statement

This place covers:

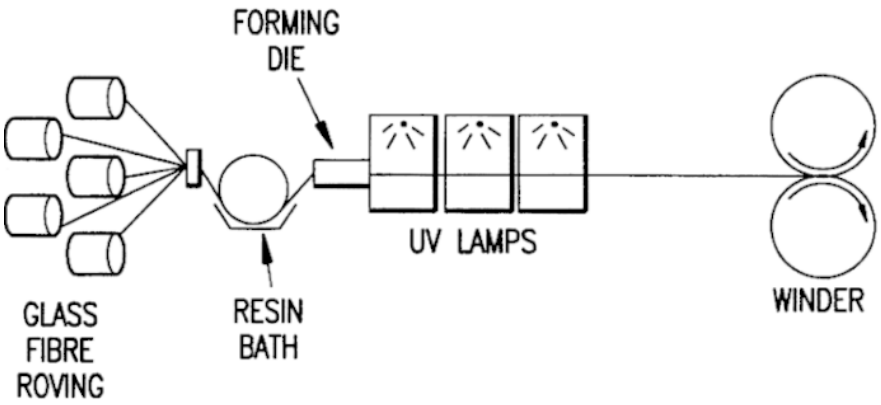

U.S. Patent Dec. 23, 1997 5,700,417

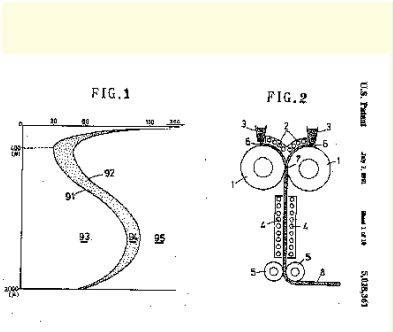

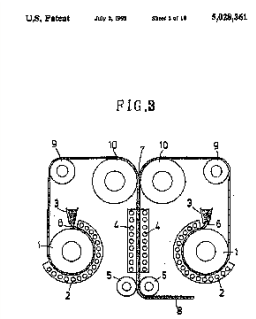

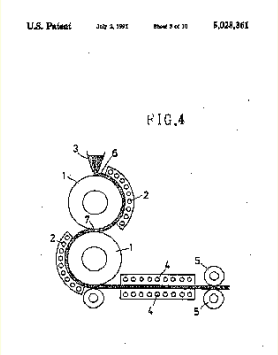

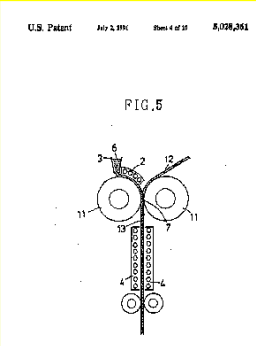

References

Informative references

Attention is drawn to the following places, which may be of interest for search:

Extrusion moulding; heating the stream of extruded material	B29C 48/91

B29C 35/12

Dielectric heating

Definition statement

This place covers:

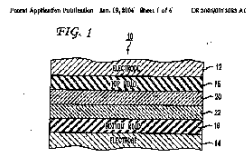

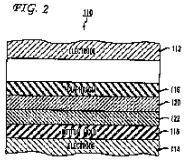

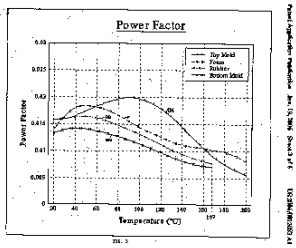

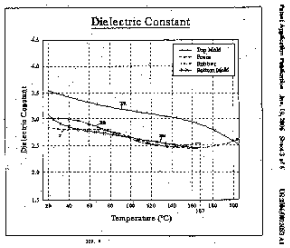

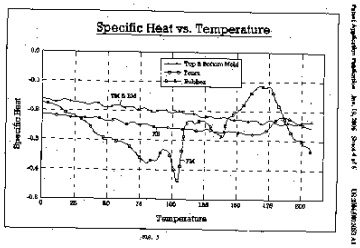

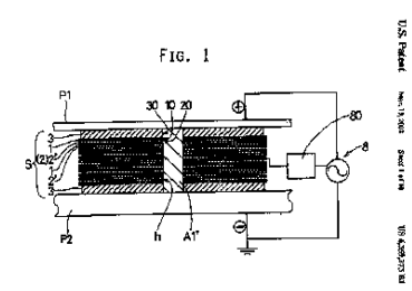
FIG. 1
P1
30 10 20
80
8
S
P2
h
A1'

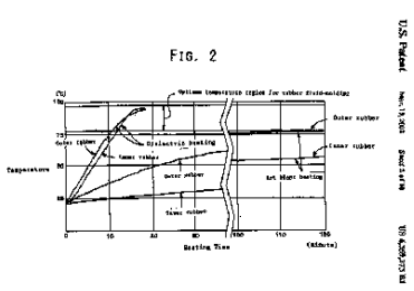
FIG. 2

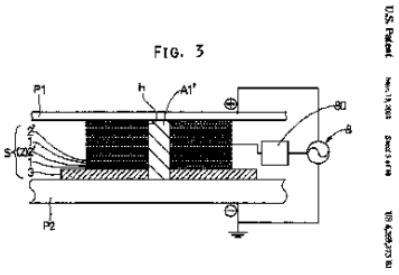
FIG. 3
P1
h
A1'
80
8
S
P2

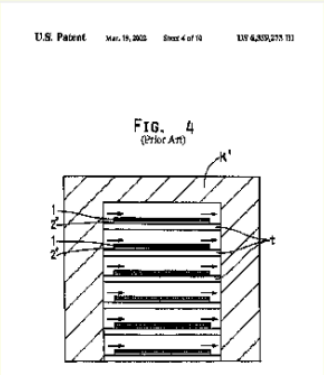
FIG. 4
(Prior Art)

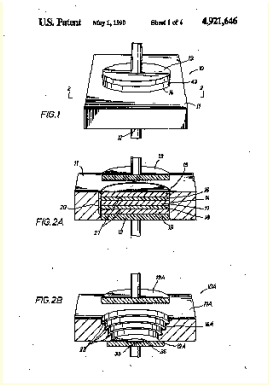
FIG.1
FIG.2A
FIG.2B

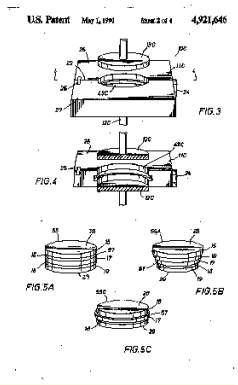
FIG.3
FIG.4
FIG.5A
FIG.5B
FIG.5C

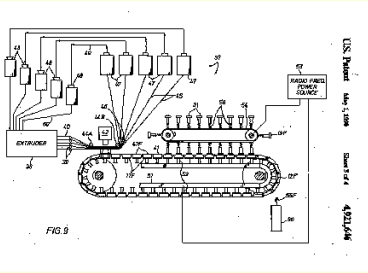
FIG.9

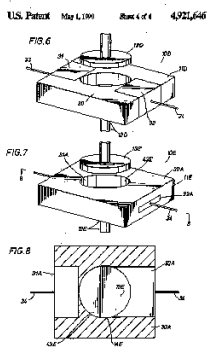
FIG.6
FIG.7
FIG.8

U.S. Patent Aug. 2, 1983 4,396,816

FIG. 1

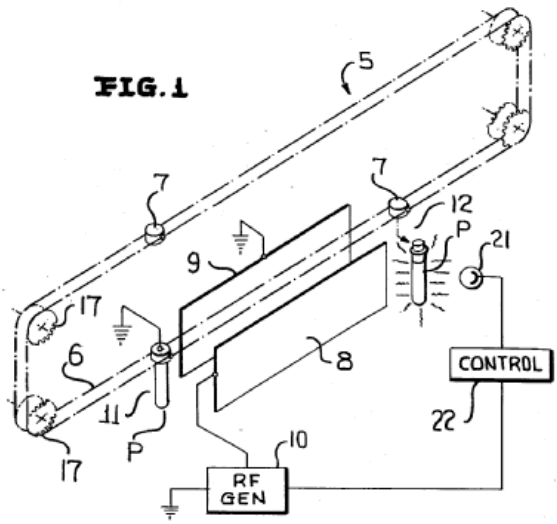

FIG. 2

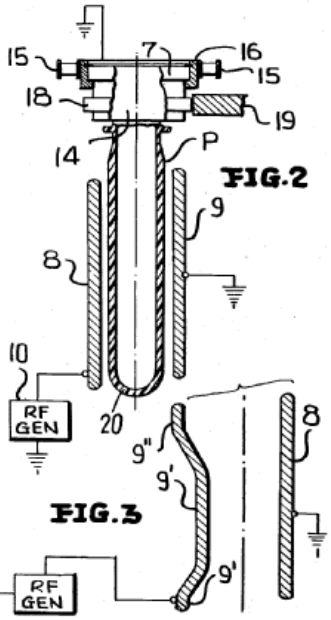

FIG. 3

U.S. Patent May 19, 1981 4,268,465



FIG. 1

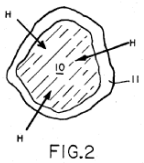

FIG. 2

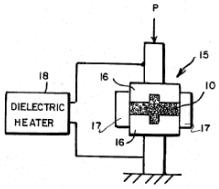

FIG. 3

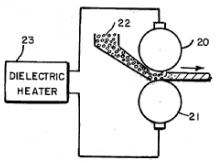

FIG. 4

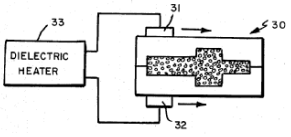

FIG. 5

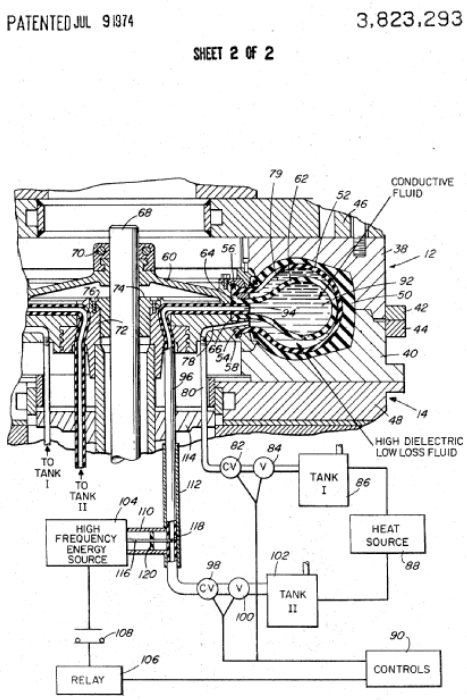

FIG. 2

References

Informative references

Attention is drawn to the following places, which may be of interest for search:

Moulds or cores with incorporated heating means for dielectric heating	B29C 33/08
Dielectric heating for welding	B29C 65/04

B29C 35/14

for articles of indefinite length

Definition statement

This place covers:

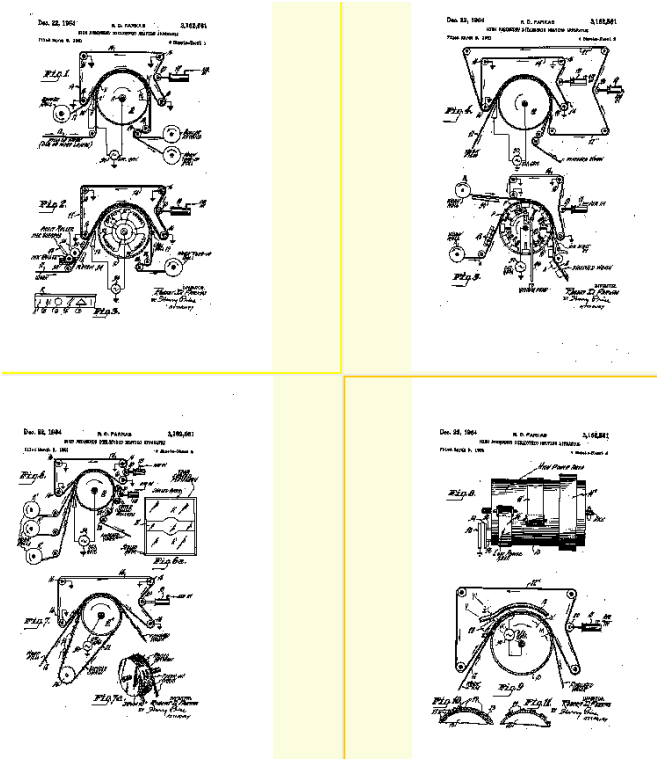

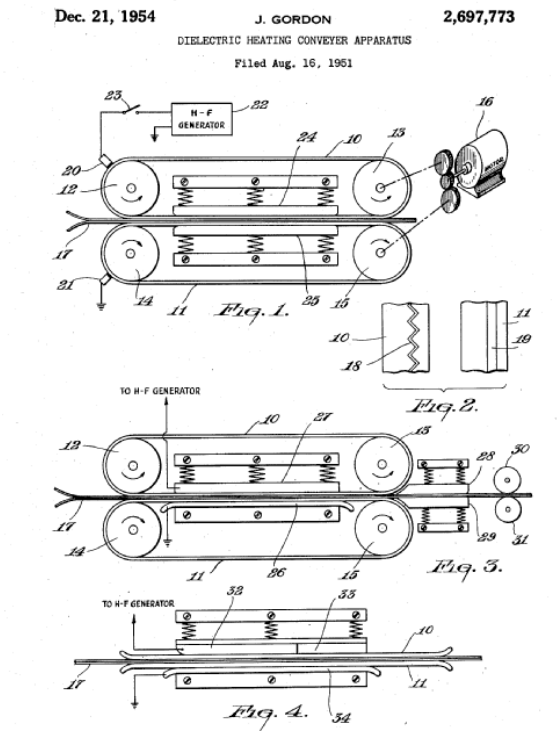

References

Informative references

Attention is drawn to the following places, which may be of interest for search:

Extrusion moulding; heating the stream of extruded material	B29C 48/78

B29C 35/16

Cooling {(cooling extruded material B29C 48/911; cooling preforms for blow moulding B29C 49/6427; cooling blown articles B29C 49/66; cooling tyres during post cure inflation B29D 30/0643)}

Definition statement

This place covers:

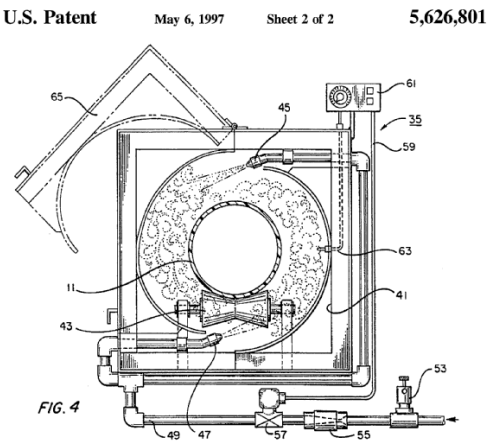

FIG. 4

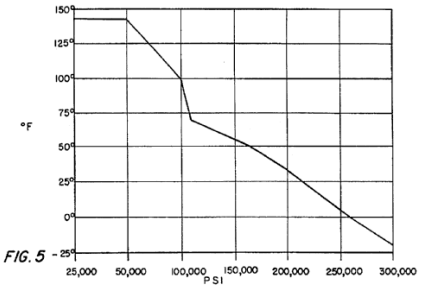

FIG. 5

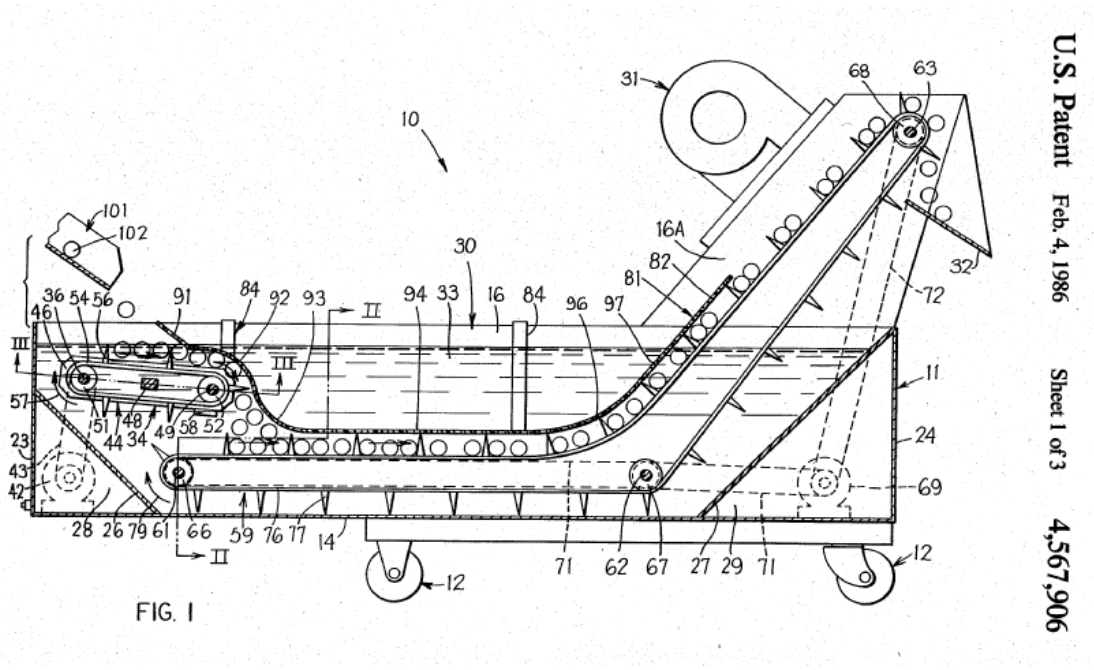

References

Informative references

Attention is drawn to the following places, which may be of interest for search:

Moulds or cores with incorporated heating or cooling means	B29C 33/02
Extrusion moulding, cooling the stream of extruded material	B29C 48/911
Blow-moulding, thermal conditioning of preforms by cooling hot or molten preforms	B29C 49/6427
Blow-moulding; cooling by refrigerant introduced into the blown article	B29C 49/66

B29C 37/00

Component parts, details, accessories or auxiliary operations, not covered by group B29C 33/00 or B29C 35/00

Definition statement

This place covers:

Methods and processes for removing articles from the mould,

Applying surface layers to moulded articles during moulding, e.g. in mould coating,

Methods for compensating volume or shape change during moulding,

Method for degassing moulded articles during moulding (e.g. draining off gas during moulding),

Methods wherein separating agents are used during or after moulding,

Methods for obtaining anchoring effects between layers during moulding,

Method for trouble-shooting during starting or stopping moulding apparatus,

Methods for deburring or deflashing moulded articles.

References

Informative references

Attention is drawn to the following places, which may be of interest for search:

measuring or controlling heating, curing	B29C 35/0294
measuring, controlling or regulating casting	B29C 39/44
measuring, controlling or regulating moulding by coating	B29C 41/52
measuring, controlling or regulating compression moulding	B29C 43/58
measuring, controlling or regulating foaming	B29C 44/60
dehumidifying moulds during injection moulding	B29C 45/1701
measuring, controlling or regulating injection moulding	B29C 45/76
detecting absence or presence of articles during injection moulding after ejection	B29C 45/7626
measuring, controlling or regulating extrusion	B29C 48/92
measuring, controlling or regulating blow moulding	B29C 49/78
measuring, controlling or regulating thermoforming	B29C 51/46
detecting absence or presence of articles during welding	B29C 66/8746

B29C 37/0003

{Discharging moulded articles from the mould (constructions for removing the articles B29C 33/44)}

Definition statement

This place covers:

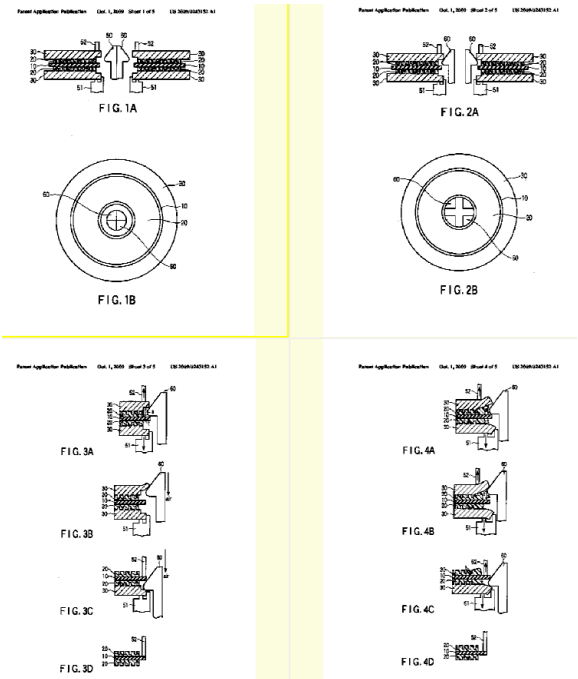

Patent Application Publication Sep. 16, 2010 Sheet 4 of 6 US 2010/0230859 A1

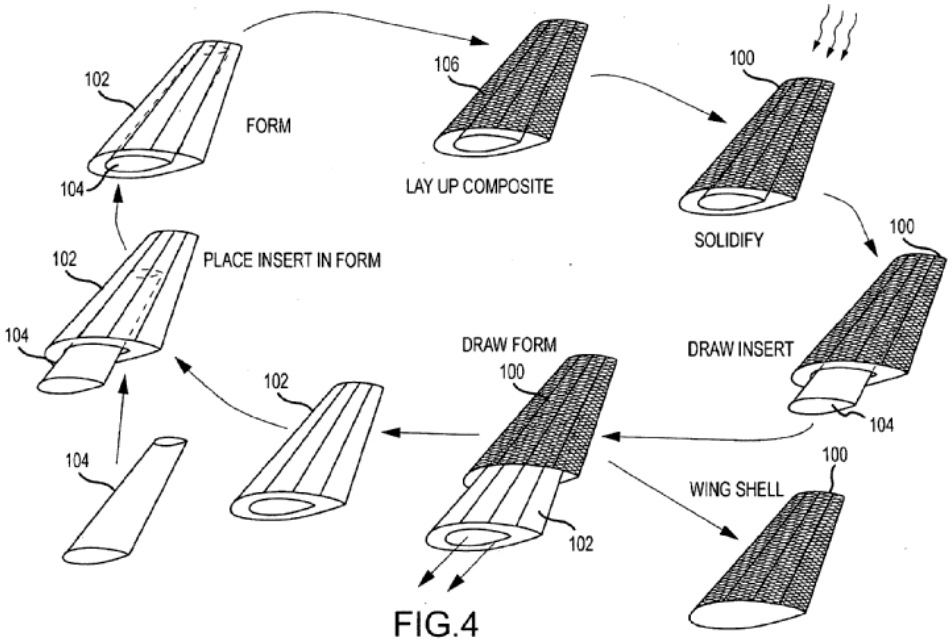

FIG.4

FIG. 11

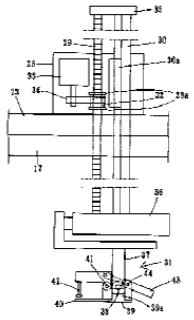

FIG. 12

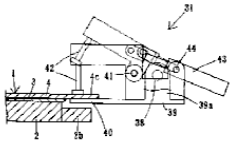

FIG. 13(A)

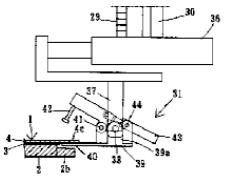

FIG. 13(B)

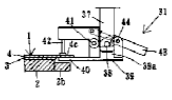

FIG. 13(C)

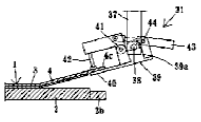

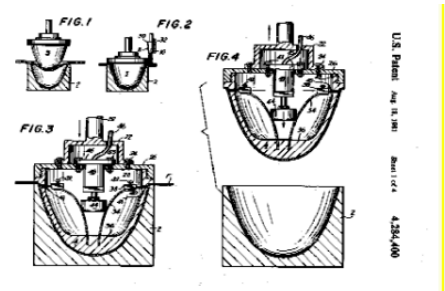

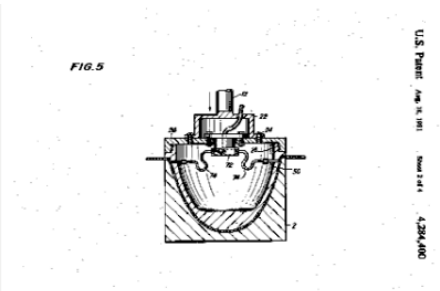

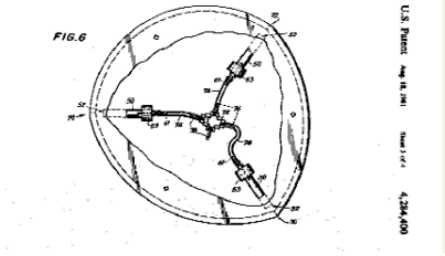

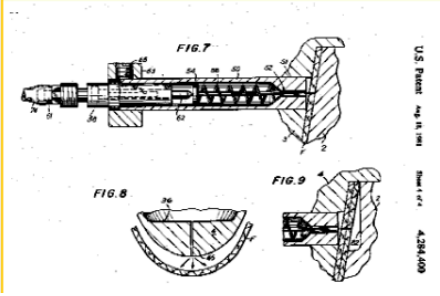

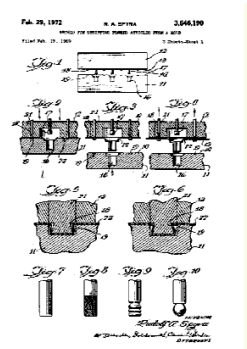

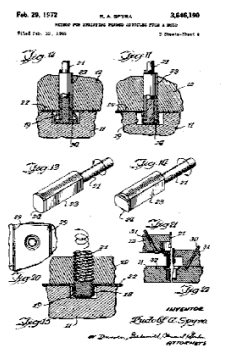

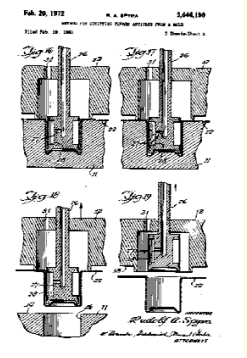

References

Informative references

Attention is drawn to the following places, which may be of interest for search:

Discharging casting moulds	B29C 39/36
Discharging coated moulds	B29C 41/42

Discharging compression moulds	B29C 43/50
Discharging injection moulds	B29C 45/40
Discharging blow moulds	B29C 49/70
Discharging thermoforming moulds	B29C 51/44
Demoulding optical elements, e.g. lenses	B29D 11/00192
Producing tyres, loading or unloading tyres presses	B29D 30/0603

B29C 37/0007

{using means operable from outside the mould for moving between mould parts, e.g. robots}

Definition statement

This place covers:

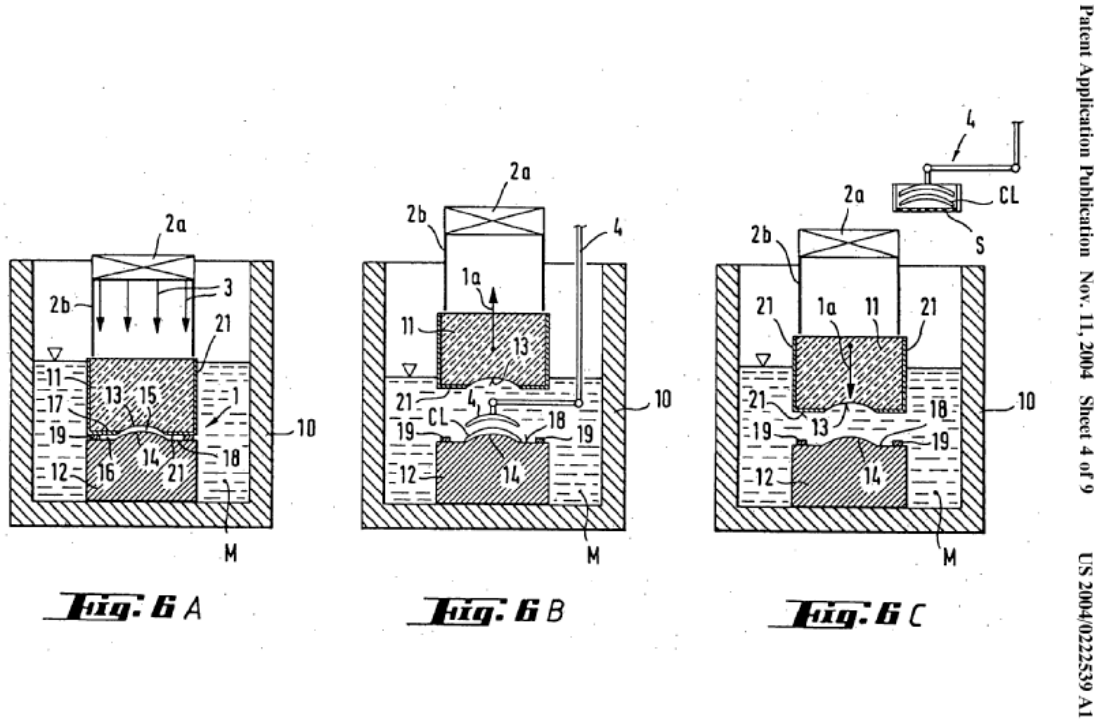

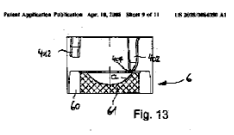

Fig. 13

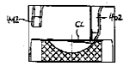

Fig. 14

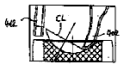

Fig. 15

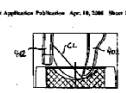

Fig. 16



Fig. 17



Fig. 18

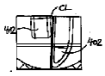

Fig. 19

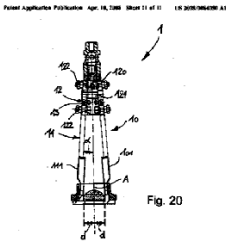

Fig. 20



Fig. 21



Fig. 22

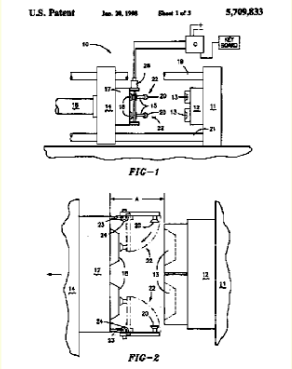

FIG–1

FIG–2

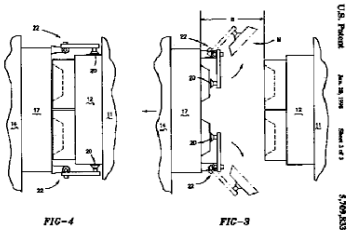

FIG–4

FIG–3

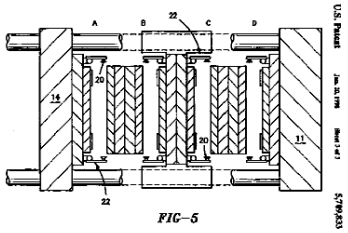

FIG–5

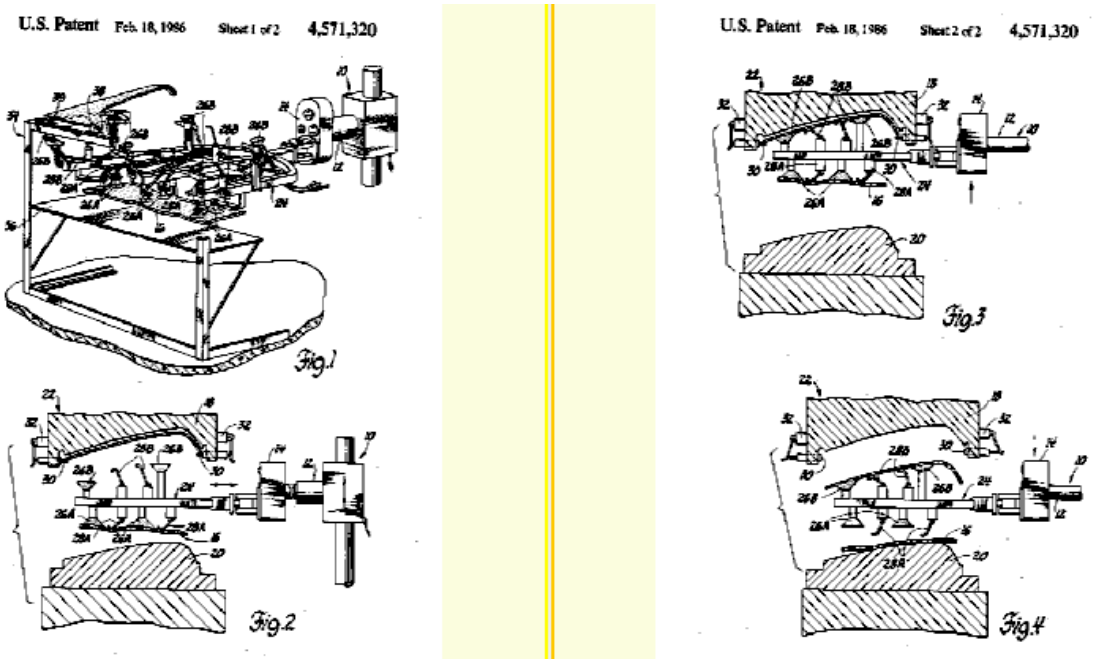

References

Informative references

Attention is drawn to the following places, which may be of interest for search:

Discharging injection moulds, using means movable from outside the mould	B29C 45/42

B29C 37/001

{combined with means for loading preforms to be moulded or inserts, e.g. preformed layers}

Definition statement

This place covers:

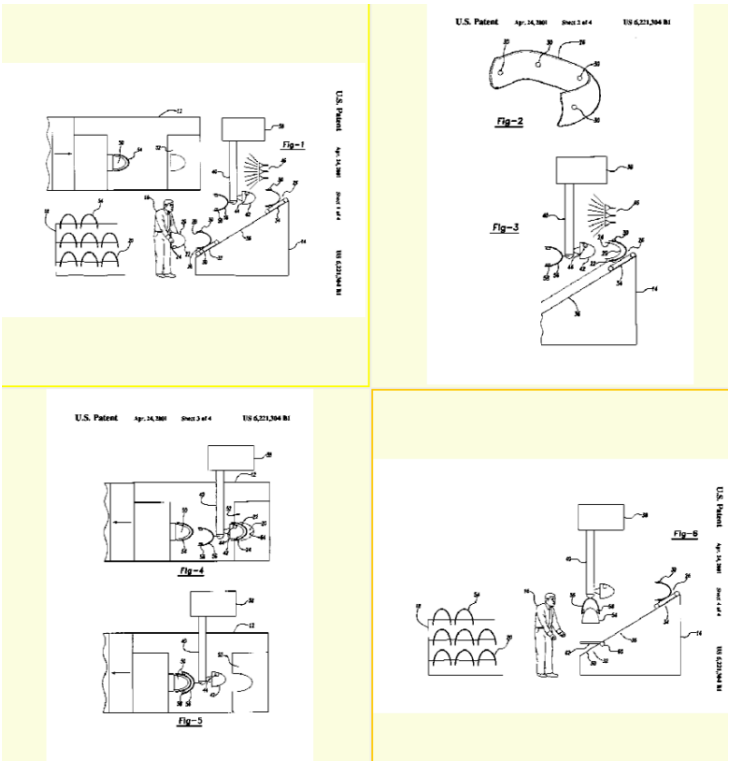

B29C 37/0014

{by flexibly or permanently deforming undercut portions of the articles}

Definition statement

This place covers:

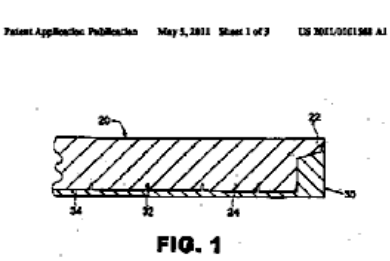

FIG. 1

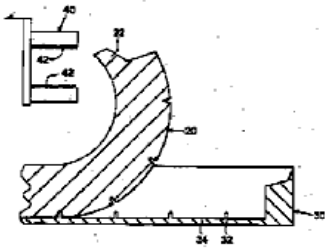

FIG. 2

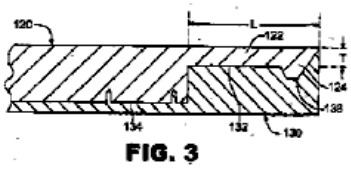

FIG. 3

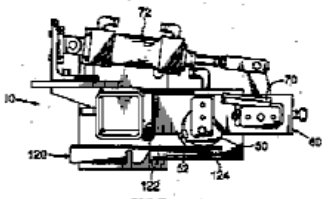

FIG. 4

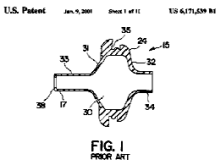

FIG. 1
PRIOR ART

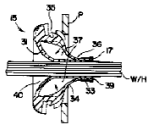

FIG. 2
PRIOR ART

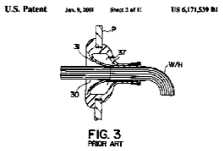

FIG. 3
PRIOR ART

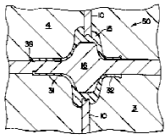

FIG. 4

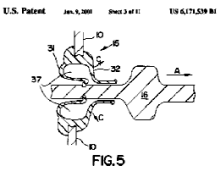

FIG. 5

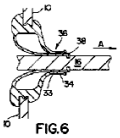

FIG. 6

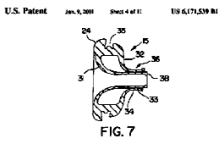

FIG. 7

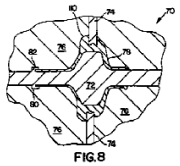

FIG. 8

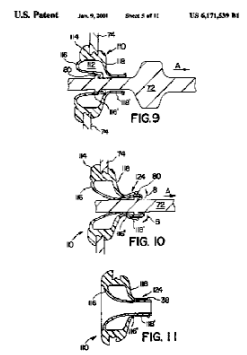
U.S. Patent
FIG.9
FIG. 10
FIG. 11

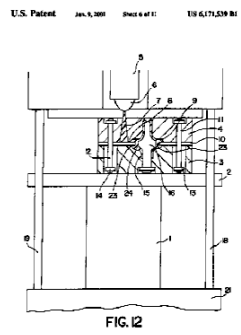
U.S. Patent
FIG. 12

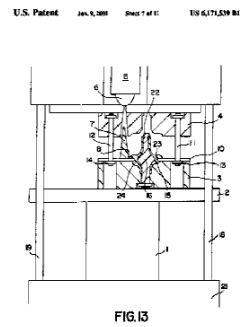
U.S. Patent
FIG.13

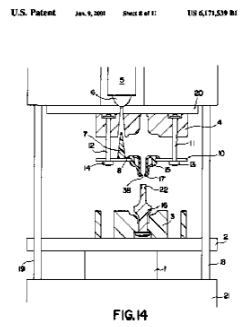
U.S. Patent
FIG.14

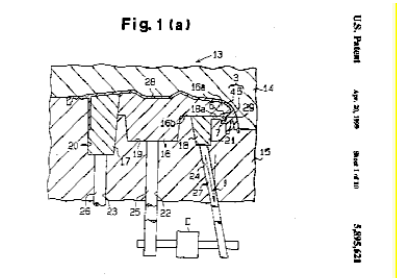
Fig. 1 (a)
U.S. Patent

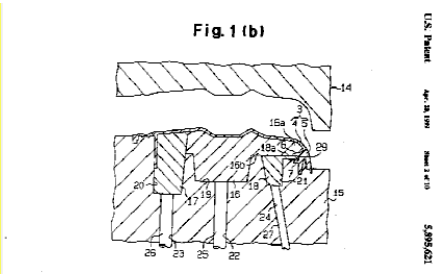
Fig. 1 (b)
U.S. Patent

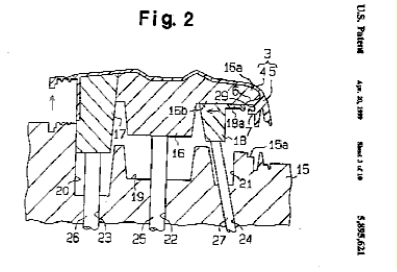
Fig. 2
U.S. Patent

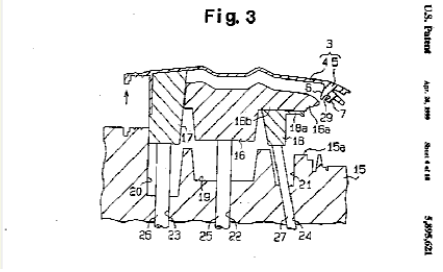
Fig. 3
U.S. Patent

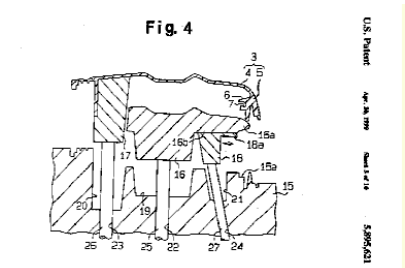

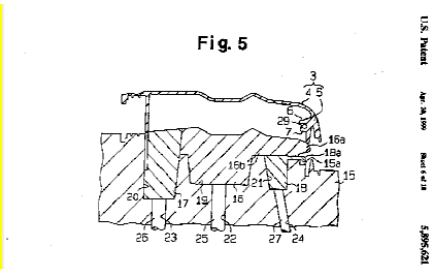

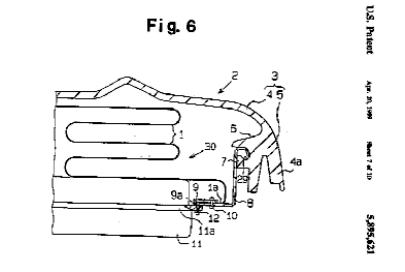

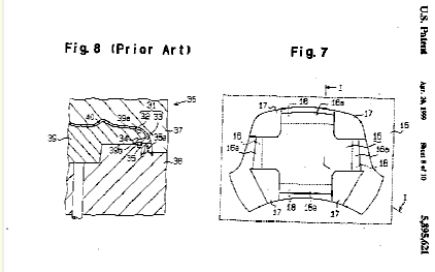

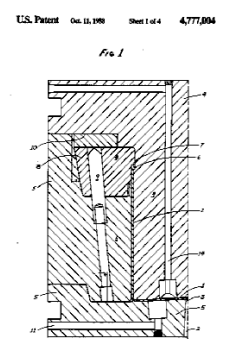

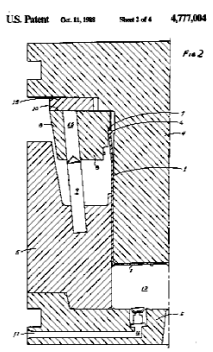

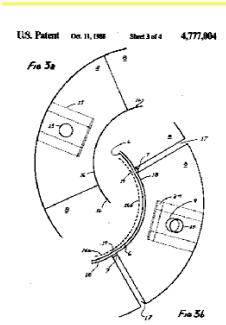

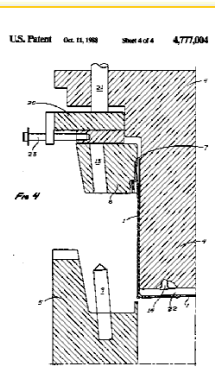

References

Informative references

Attention is drawn to the following places, which may be of interest for search:

Discharging injection moulds, by flexible movement of undercut article	B29C 45/4407

B29C 37/0017

{by stripping articles from mould cores}

Definition statement

This place covers:

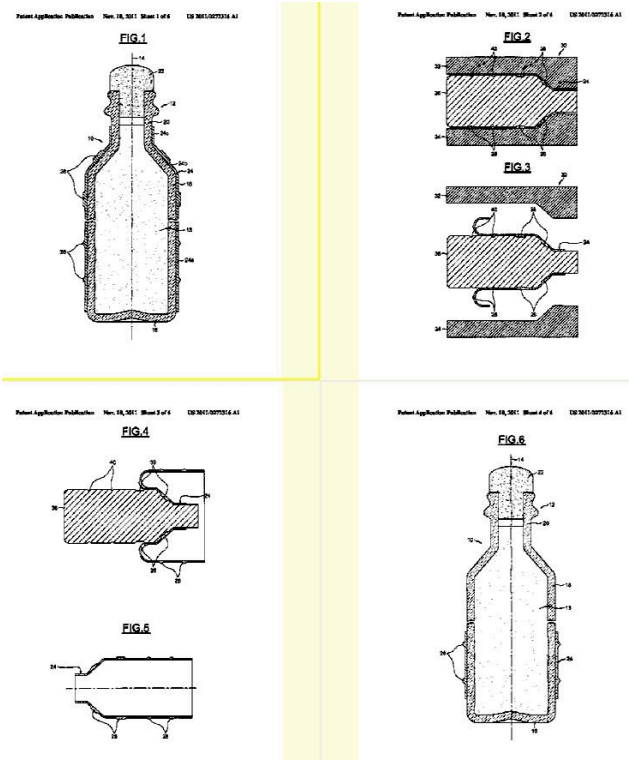

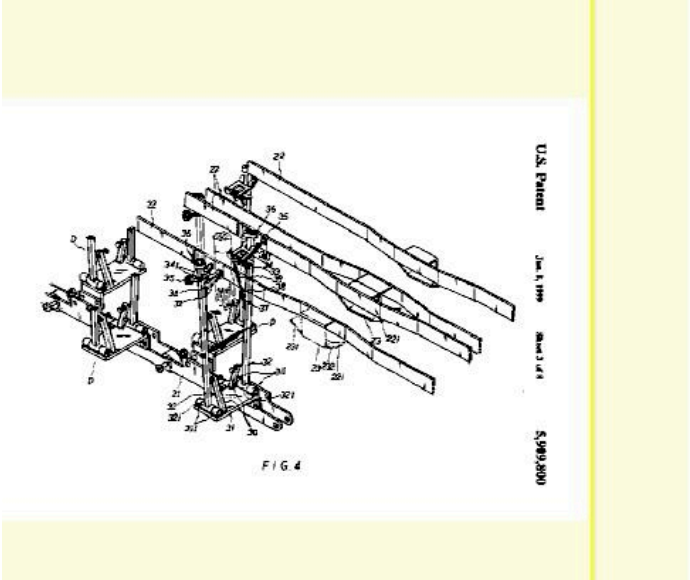

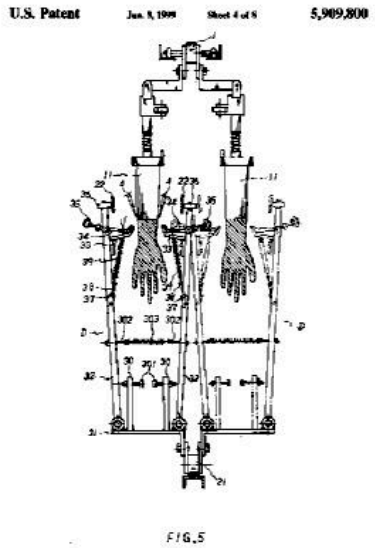

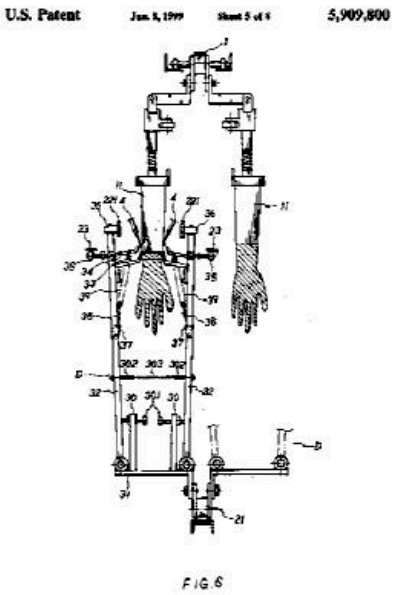

FIG.6

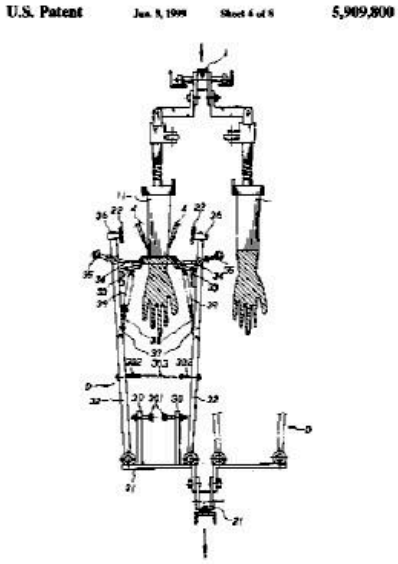

FIG.7

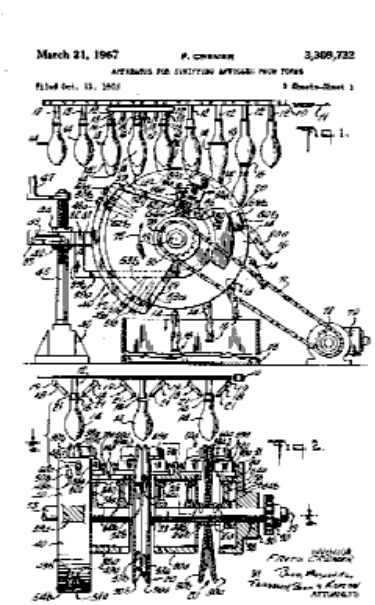

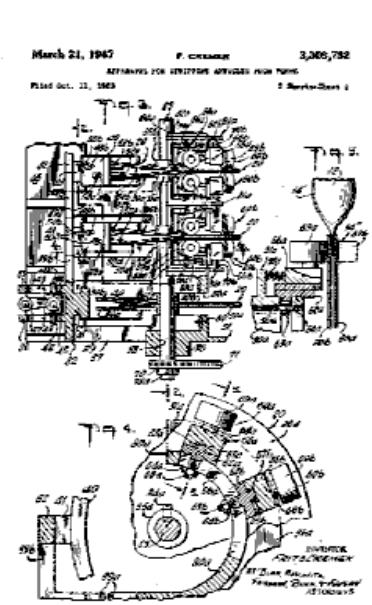

References

Informative references

Attention is drawn to the following places, which may be of interest for search:

Moulds or cores with means for the removal of articles; with mechanical ejector or drive means for stripping articles from a mould core, e.g. using striper plates	B29C 33/444

B29C 37/0021

{and using a rotating movement to unscrew articles (in particular used in injection moulding B29C 45/178)}

Definition statement

This place covers:

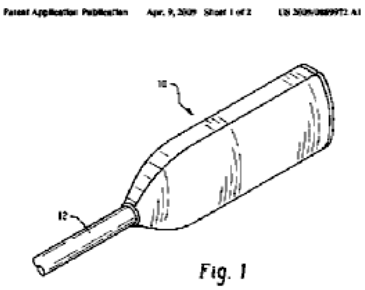

Fig. 1

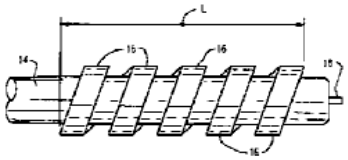

Fig. 2

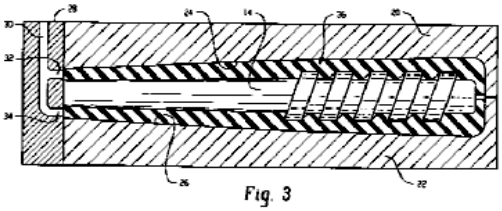

Fig. 3



Fig. 4

B29C 37/0025

{Applying surface layers, e.g. coatings, decorative layers, printed layers, to articles during shaping, e.g. in-mould printing (moulding on preformed layers as inserts B29C 70/68; applying fluent material to surfaces in general B05)}

Definition statement

This place covers:

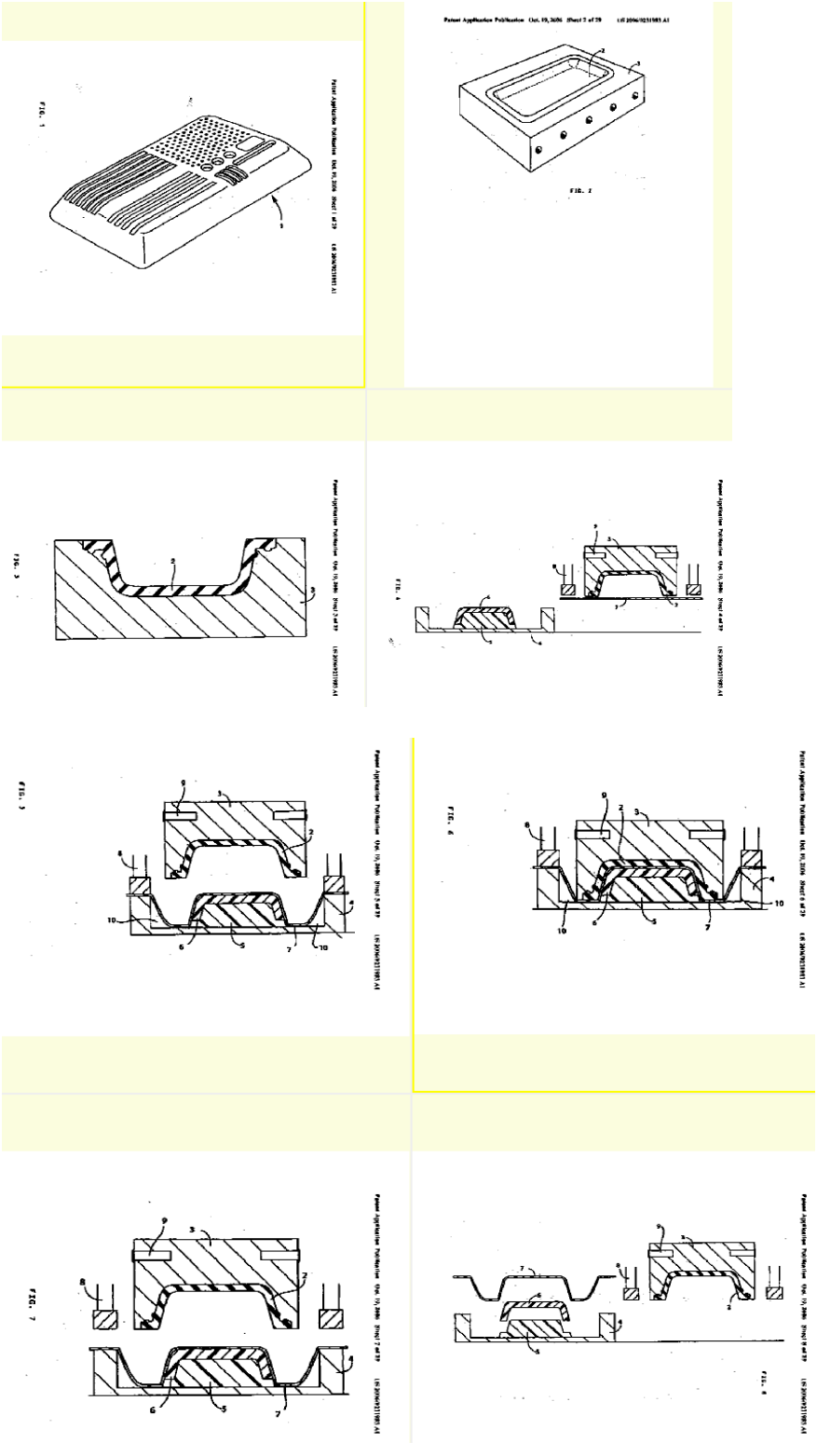

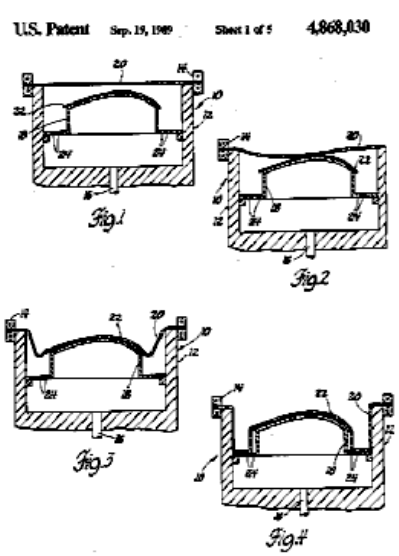

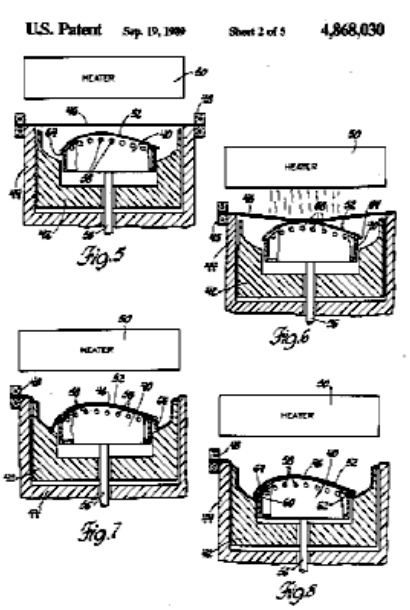

References

Informative references

Attention is drawn to the following places, which may be of interest for search:

Compression moulding of definite length, incorporating preformed linings	B29C 43/183
Injection moulding, incorporating preformed parts or layers, multilayered articles	B29C 45/14811

B29C 37/0028

{In-mould coating, e.g. by introducing the coating material into the mould after forming the article}

Definition statement

This place covers:

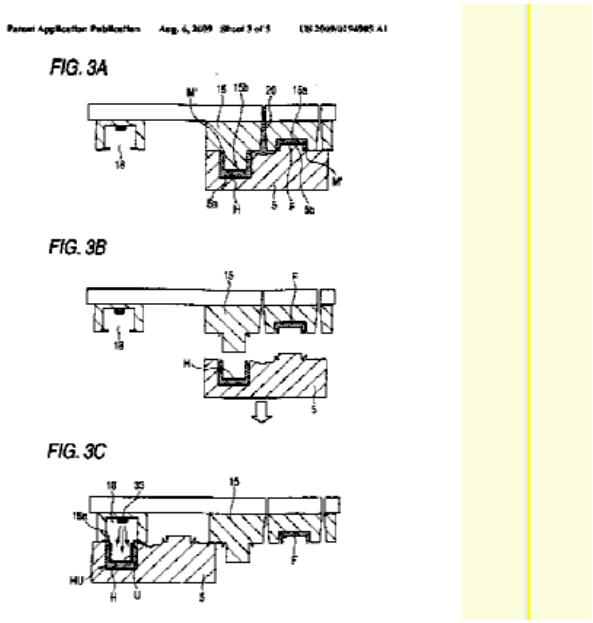

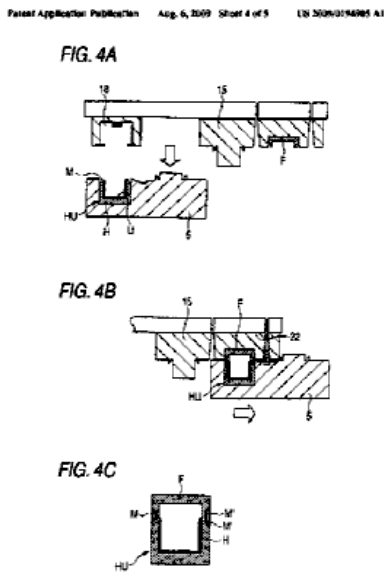

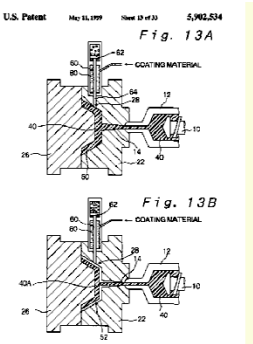

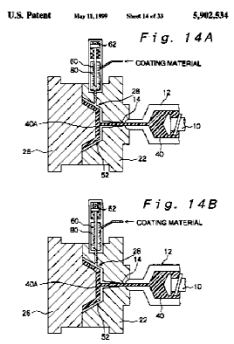

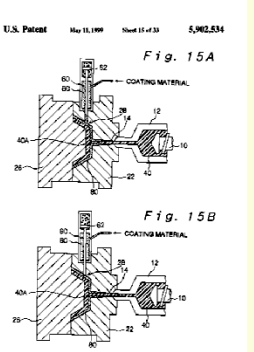

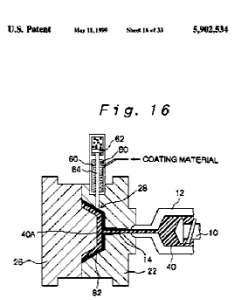

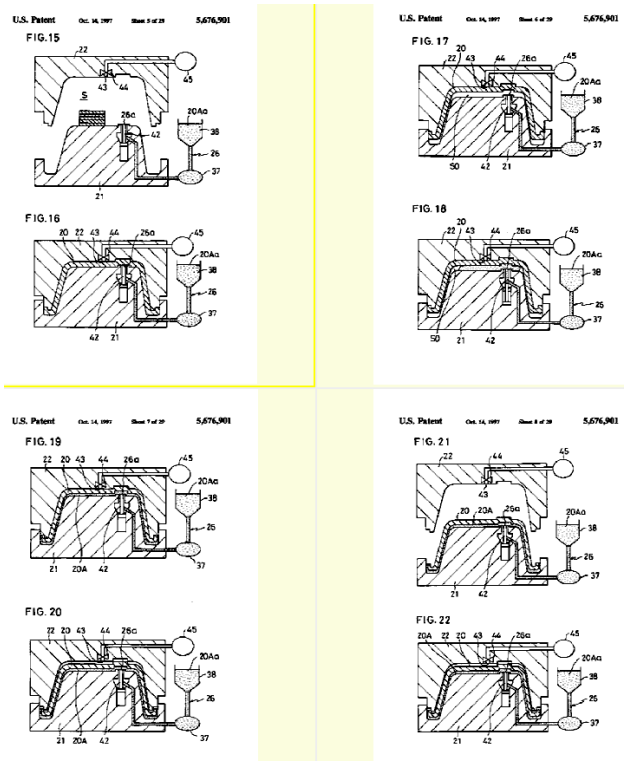

References

Informative references

Attention is drawn to the following places, which may be of interest for search:

Injection moulding, making multilayered or multicoloured articles	B29C 45/16

B29C 37/0032

{the coating being applied upon the mould surface before introducing the moulding compound, e.g. applying a gelcoat (B29C 44/14 and B29C 44/32 take precedence)}

Definition statement

This place covers:

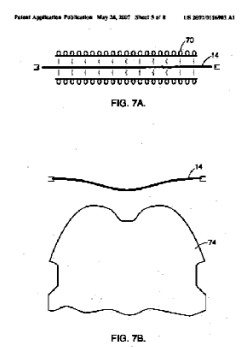

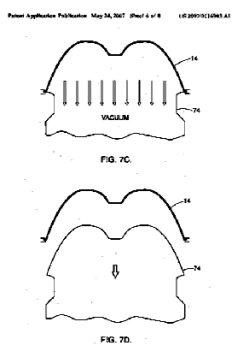

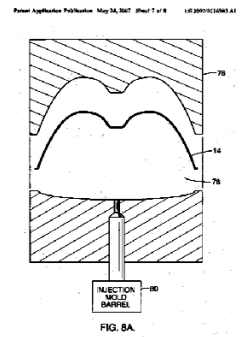

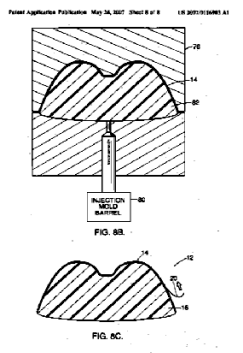

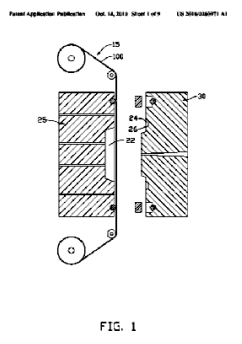

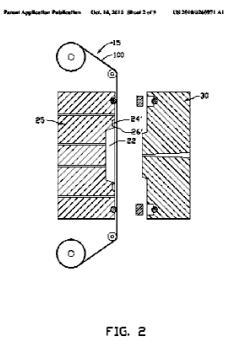

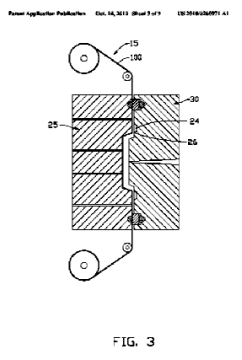

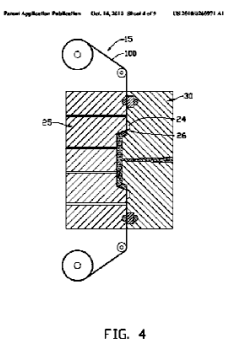

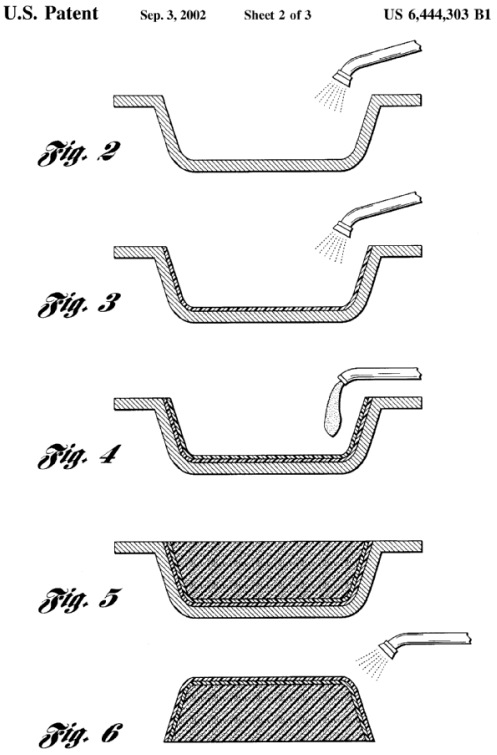

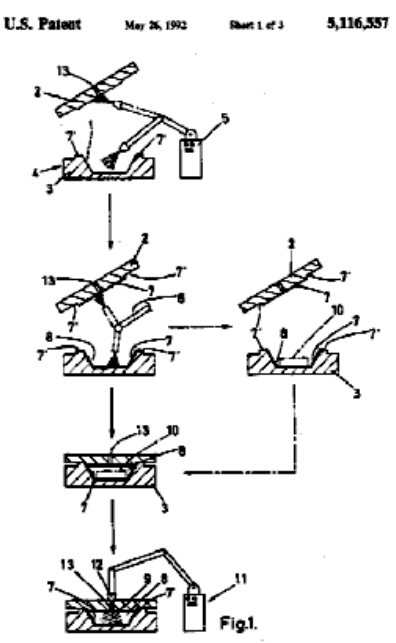

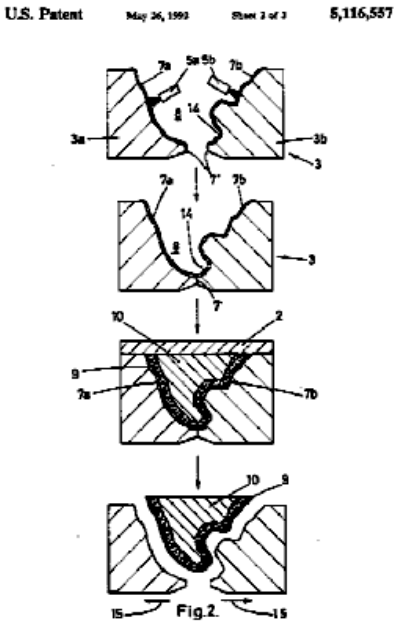

References

Informative references

Attention is drawn to the following places, which may be of interest for search:

Shaping by coating a mould, making multilayered or multicoloured articles of definite length	B29C 41/22
Injection moulding, making multilayered articles, applying surface layers inside the mould cavity, e.g. in mould coating (IMC)	B29C 45/1679

B29C 37/005

{Compensating volume or shape change during moulding, in general}

Definition statement

This place covers:

FIG.1

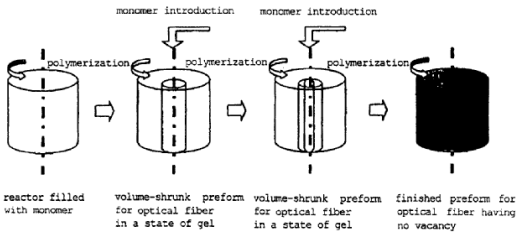

FIG.2

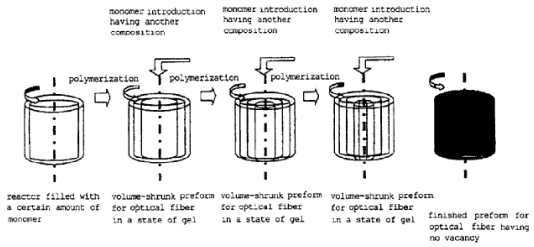

FIG.3

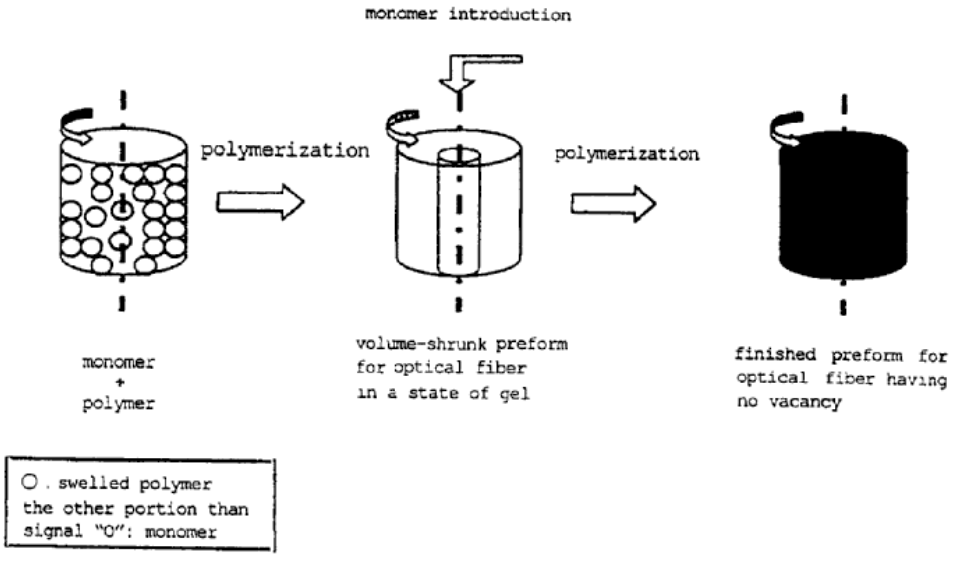

References

Informative references

Attention is drawn to the following places, which may be of interest for search:

Shaping by casting; compensating volume change, e.g. retraction	B29C 39/44
Shaping by coating a mould or a core; compensating volume change, e.g. retraction	B29C 41/48
Compression moulding, compensating volume change, e.g. retraction	B29C 43/54

B29C 37/0053

{Moulding articles characterised by the shape of the surface, e.g. ribs, high polish (mould construction therefor B29C 33/42; surface shaping of articles B29C 59/00; by incorporating filler in or near the surface B29C 70/64)}

Definition statement

This place covers:

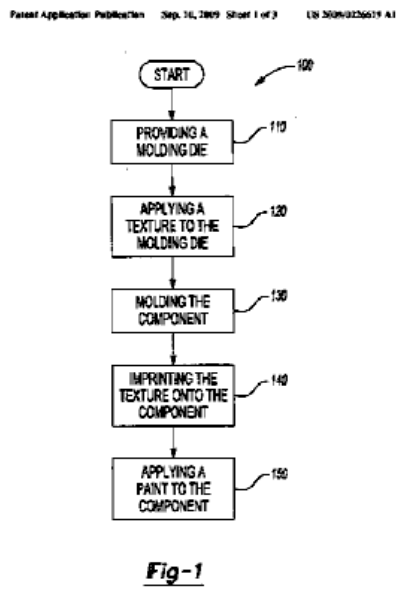

Fig-1

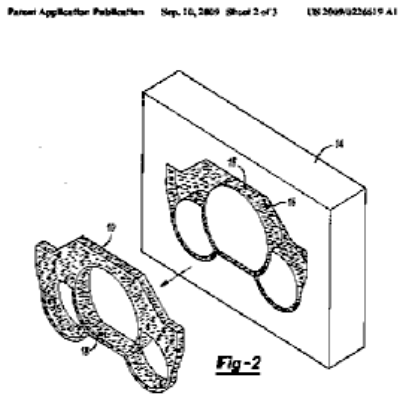

Fig-2



Fig-3

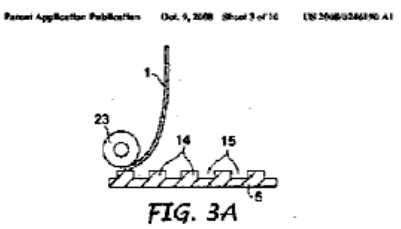

FIG. 3A

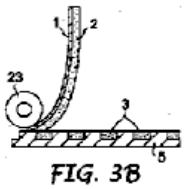

FIG. 3B

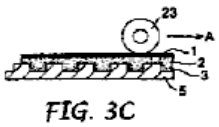

FIG. 3C

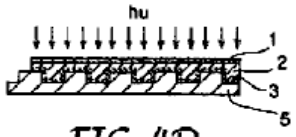

FIG. 4D

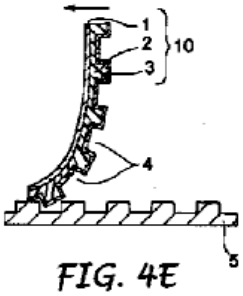

FIG. 4E

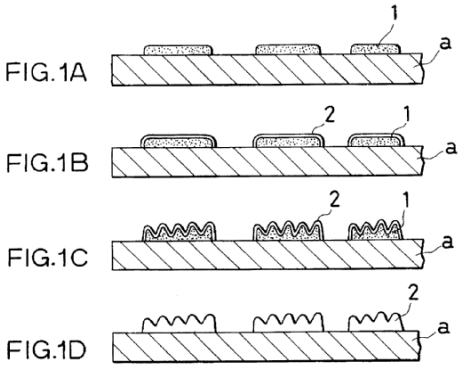

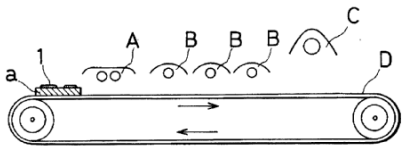

FIG. 2

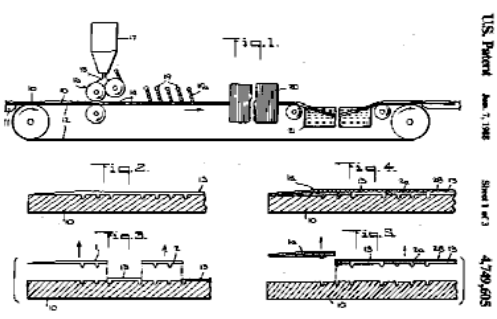

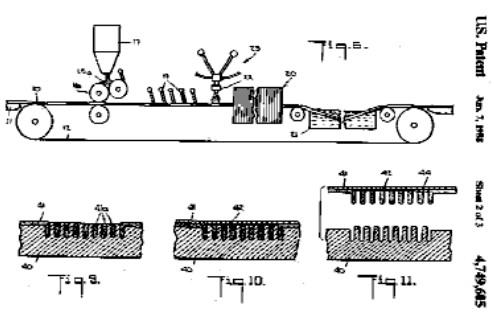

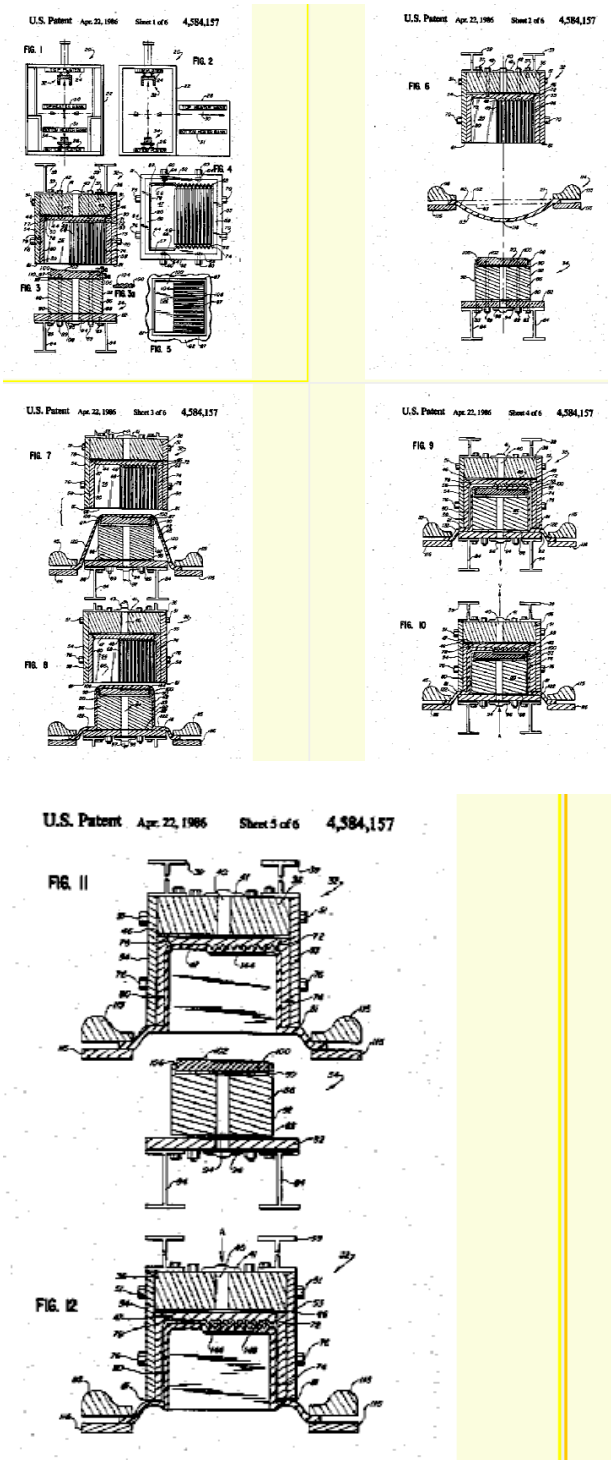

References

Informative references

Attention is drawn to the following places, which may be of interest for search:

Moulds or cores characterized by the shape of the moulding surface, e.g. ribs, grooves	B29C 33/42
Shaping by casting, making articles of definite length characterised by the shape of the surface	B29C 39/026

Compression moulding of article of definite length chatracterised by the shape of the surface	B29C 43/021
Injection moulding, mould cavity walls provided with means for marking or patterning	B29C 45/372
Blow moulding moulds having decorating or printing means	B29C 49/52
Photomechanical, e.g. photolithographic, production of textured or patterned surfaces, e.g. printing surfaces, lithographic processes using patterning methods other than those involing the exposure to radiation, e.g. by stamping	G03F 7/0002

B29C 37/0057

{Moulding single grooves or ribs, e.g. tear lines (folding lines B29C 53/06)}

Definition statement

This place covers:

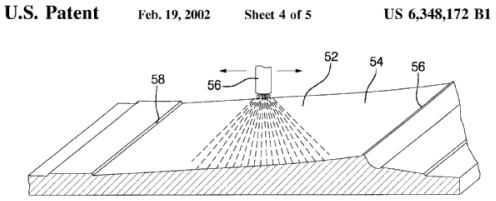

FIG. 5

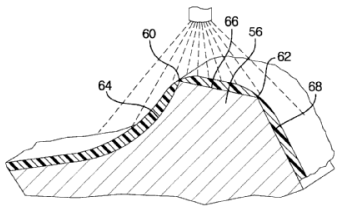

FIG. 6

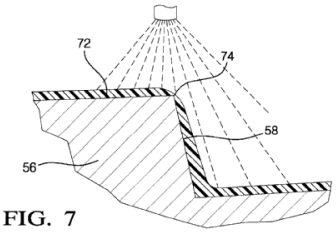

FIG. 7

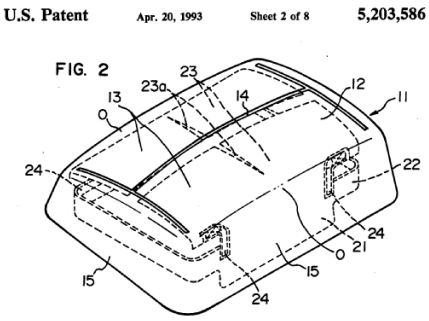

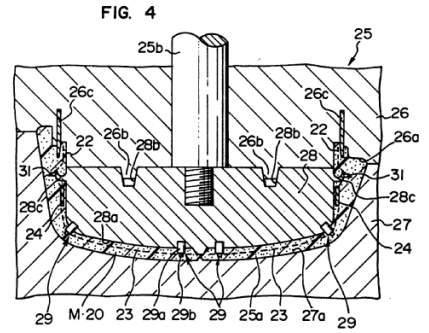

B29C 37/006

{Degassing moulding material or draining off gas during moulding (venting means in moulds B29C 33/10)}

Definition statement

This place covers:

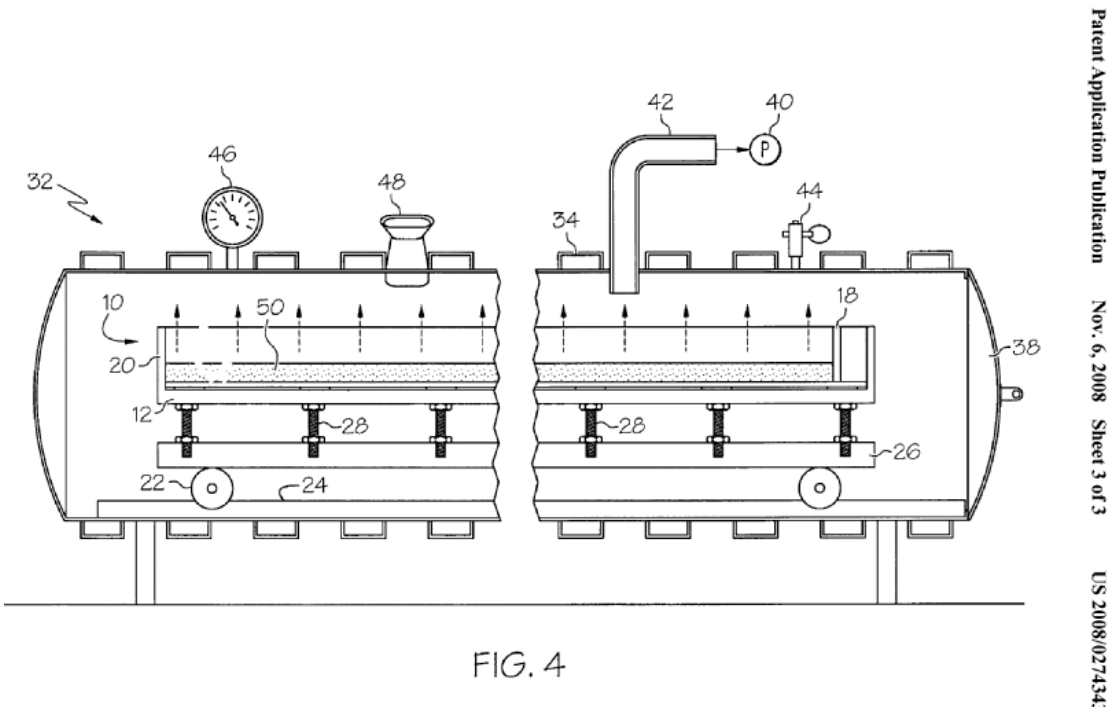

FIG. 4

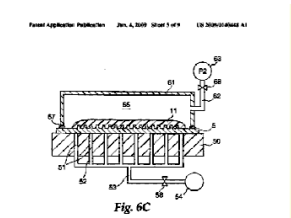

Fig. 6C

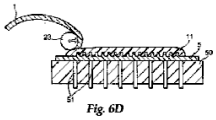

Fig. 6D

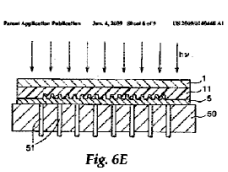

Fig. 6E

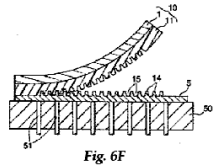

Fig. 6F

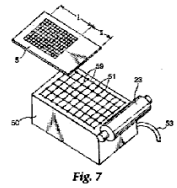

Fig. 7

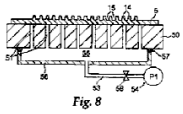

Fig. 8

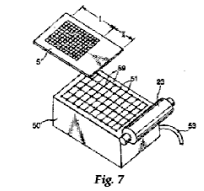

Fig. 7

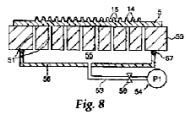

Fig. 8

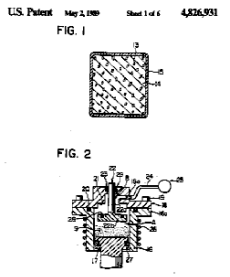

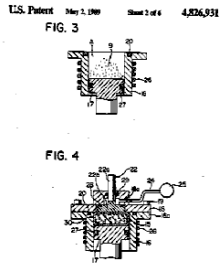

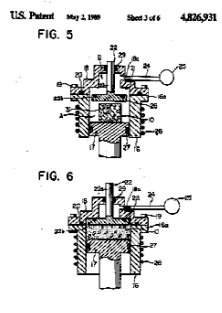

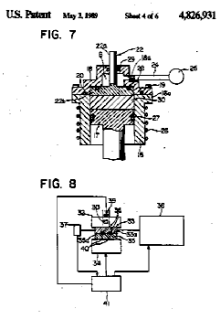

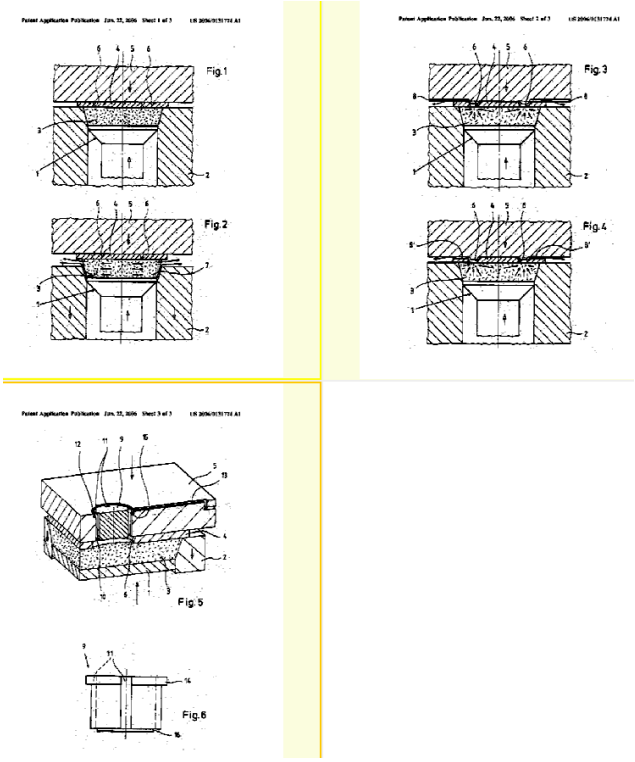

References

Informative references

Attention is drawn to the following places, which may be of interest for search:

Shaping by casting; casting under special conditions, e.g. vacuum:	B29C 39/42
Degassing, draining off gases, as after treatment	B29C 71/00
Producing lenses, removing oxygen from the mould	B29D 11/00125

B29C 37/0064

{of reinforced material}

Definition statement

This place covers:

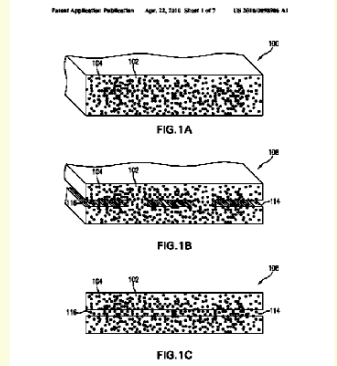

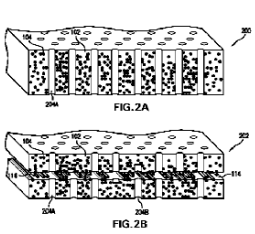

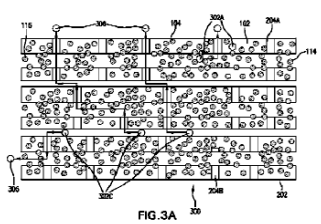

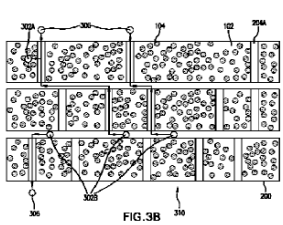

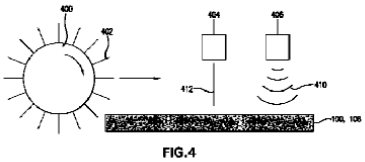

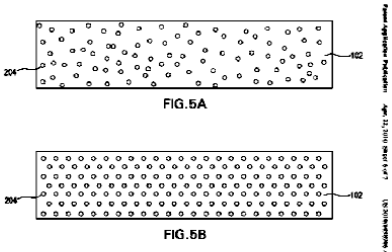

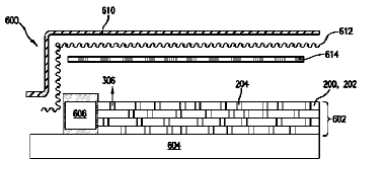

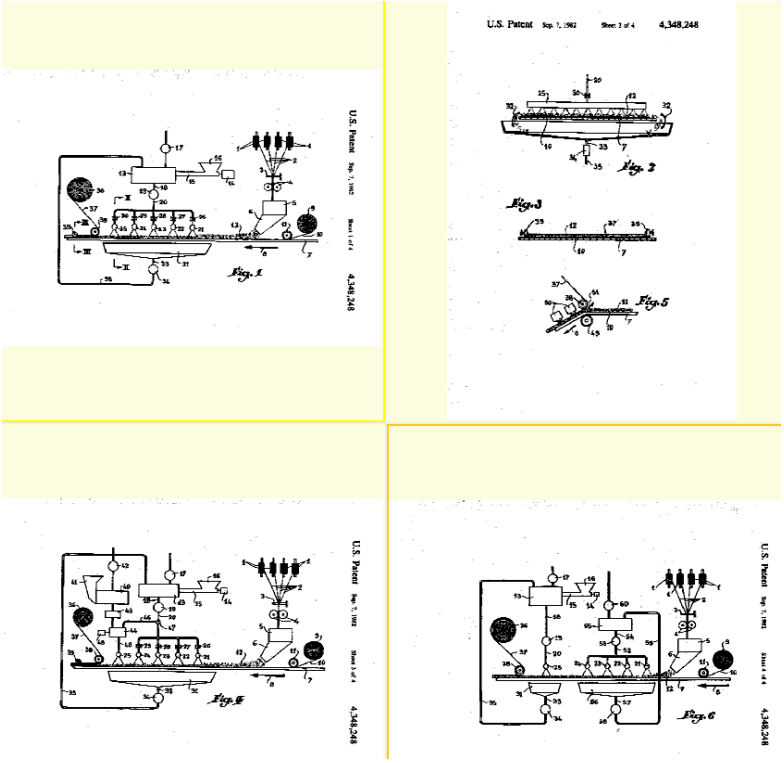

B29C 37/0067

{Using separating agents during or after moulding; Applying separating agents on preforms or articles, e.g. to prevent sticking to each other (separating agents B29C 33/60)}

References

Informative references

Attention is drawn to the following places, which may be of interest for search:

Moulds or cores, coatings, applying the releasing agent	B29C 33/58
Moulds or cores, coatings, releasing, lubricating or separating agent	B29C 33/60

B29C 37/0071

{Dusting machines}

Definition statement

This place covers:

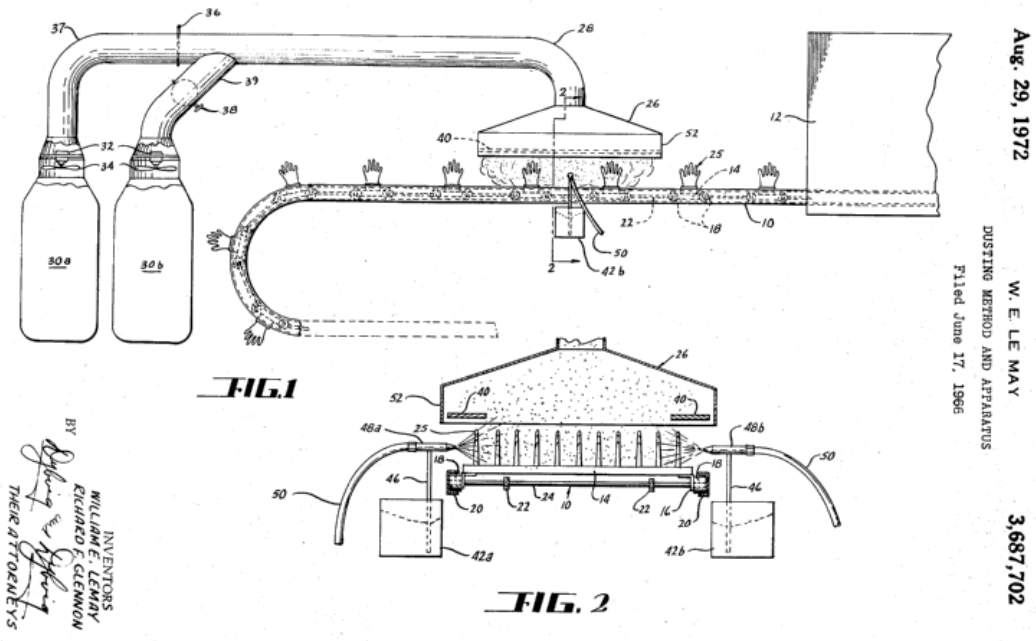

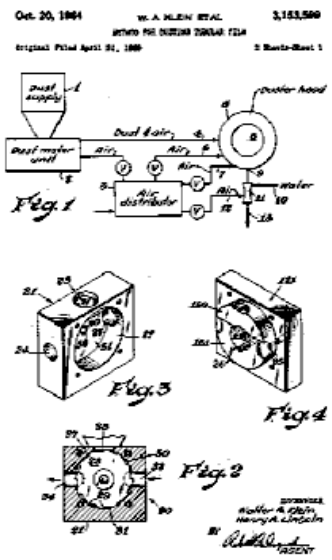

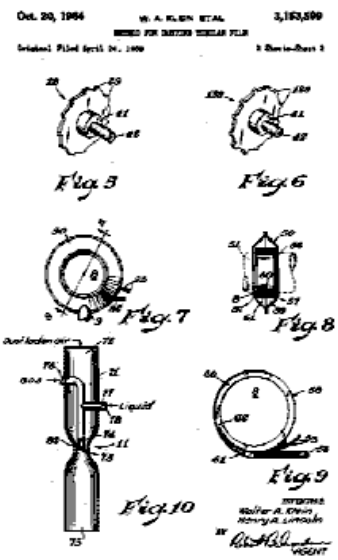

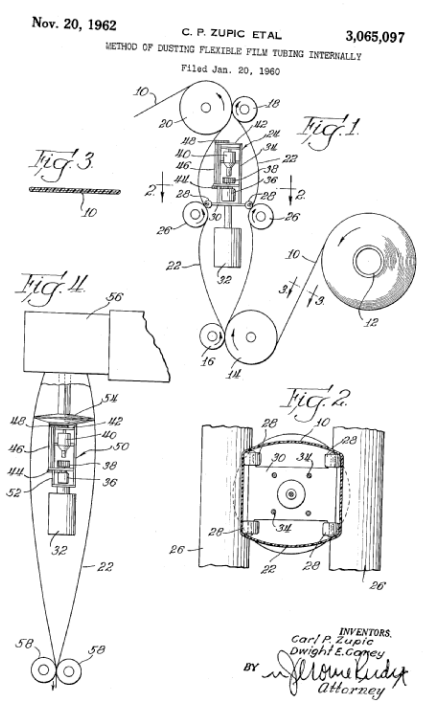

B29C 37/0075

{using release sheets}

Definition statement

This place covers:

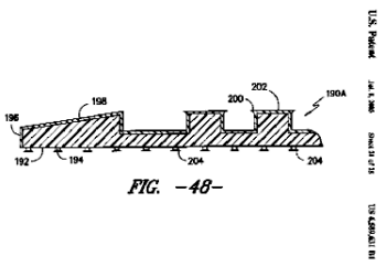

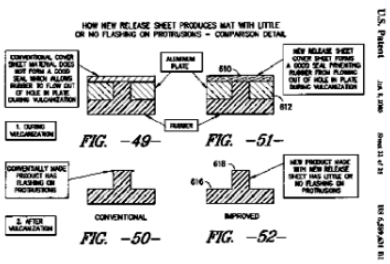

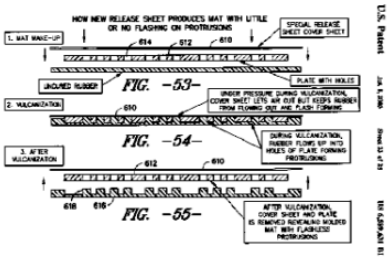

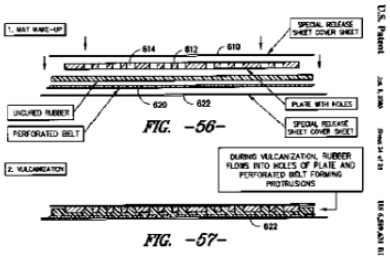

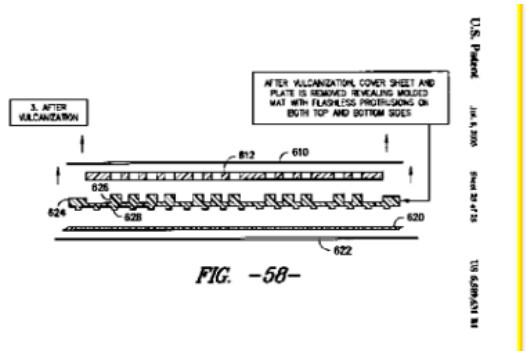

FIG. -58-

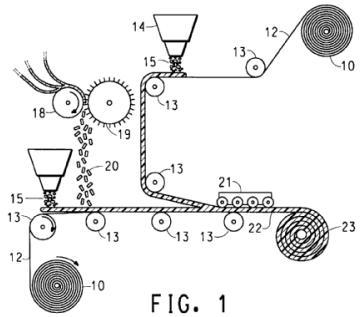

FIG. 1

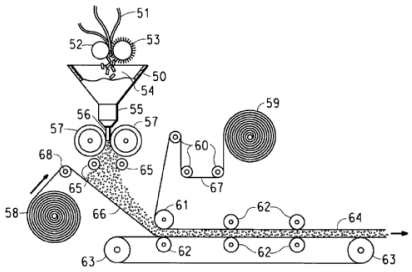

FIG. 2

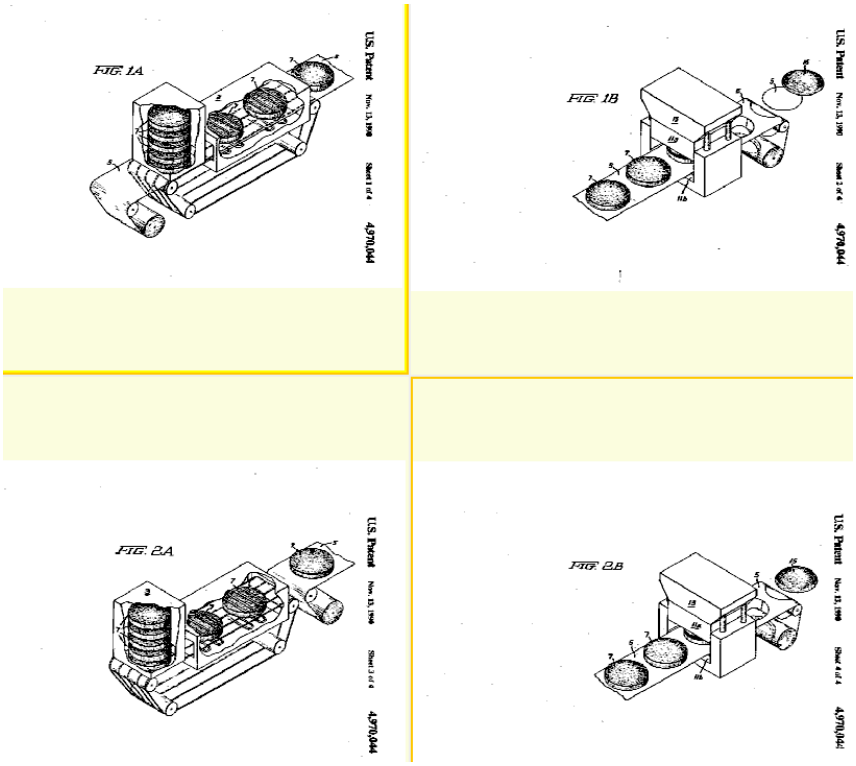

Oct. 3, 1961 R. KERN ET AL 3,002,840
ANTI-TACK COMPOSITION
Filed Feb. 26, 1959

FIG. 1

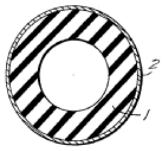

FIG. 2

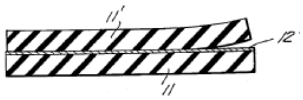

FIG. 3

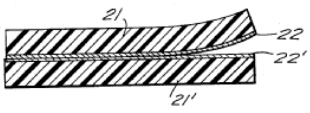

References

Informative references

Attention is drawn to the following places, which may be of interest for search:

Release sheets for moulds or cores	B29C 33/68

B29C 37/0078

{Measures or configurations for obtaining anchoring effects in the contact areas between layers (surface shaping B29C 59/00; B29C 66/02 takes precedence)}

Definition statement

This place covers:

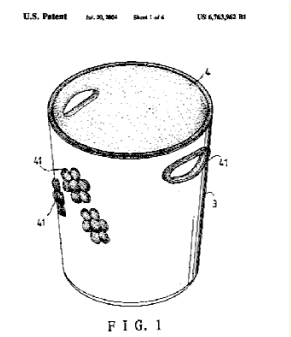

FIG. 1

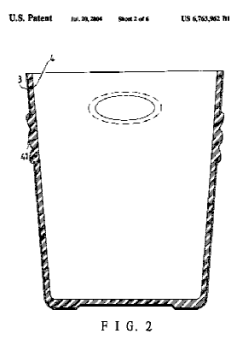

FIG. 2

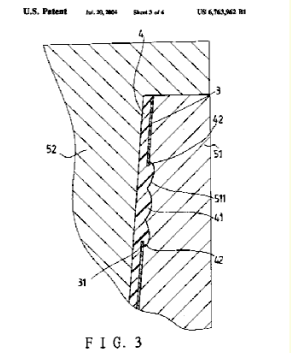

FIG. 3

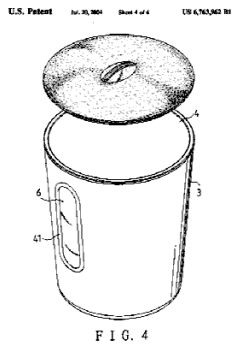

FIG. 4

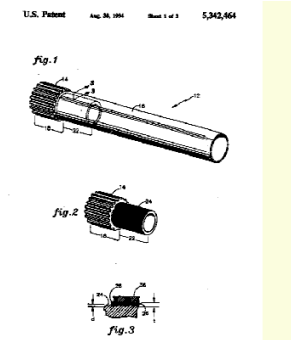

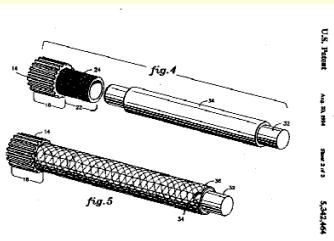

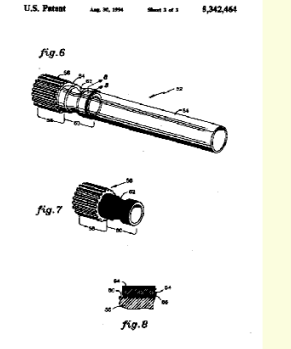

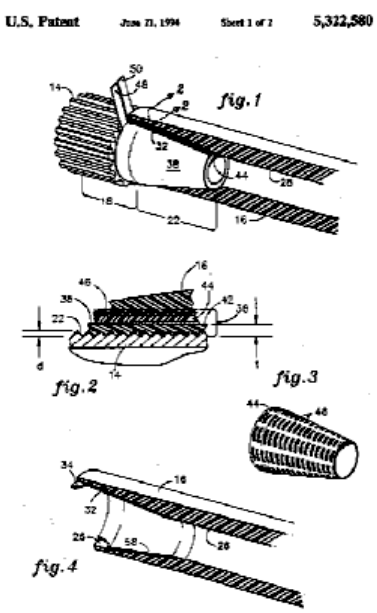

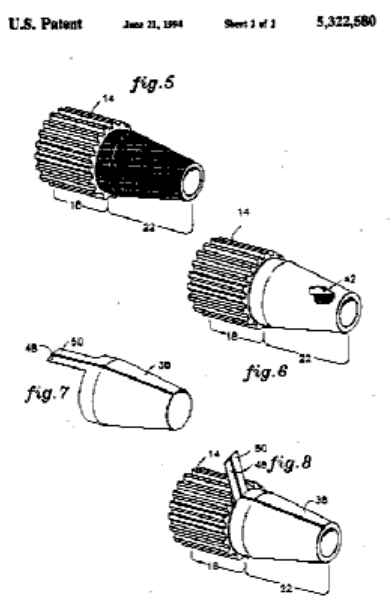

References

Informative references

Attention is drawn to the following places, which may be of interest for search:

Shaping composites, comprising fillers only, the filler influencing the surface characteristics of the material, e.g. by concentrating near the surface or by incorporating in the surface by force	B29C 70/64

B29C 37/0082

{Mechanical anchoring (B29C 66/303 takes precedence)}

Definition statement

This place covers:

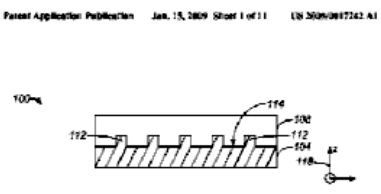

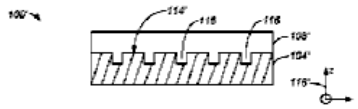

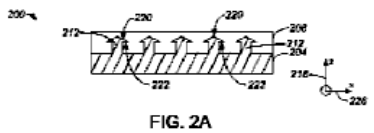

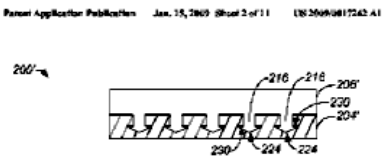

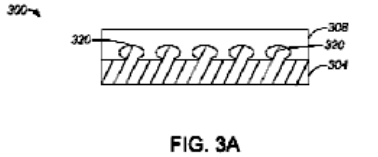

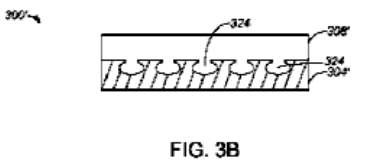

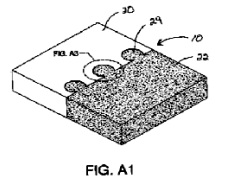

FIG. A1

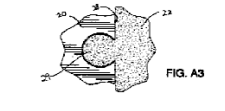

FIG. A3

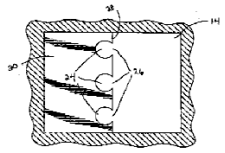

FIG. A4

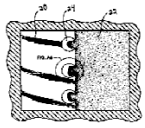

FIG. A5

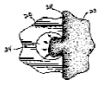

FIG. A6

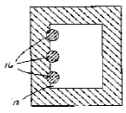

FIG. A7

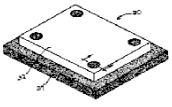

FIG. B1

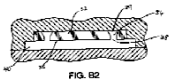

FIG. B2

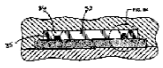

FIG. B3



FIG. B4

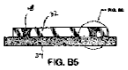

FIG. B5



FIG. B6

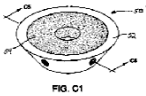

FIG. C1

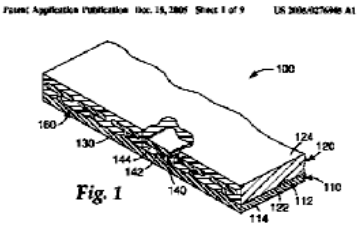

Fig. 1

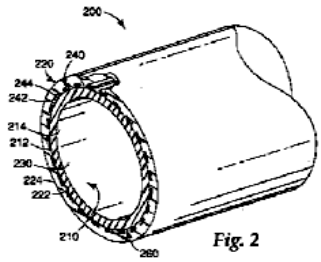

Fig. 2

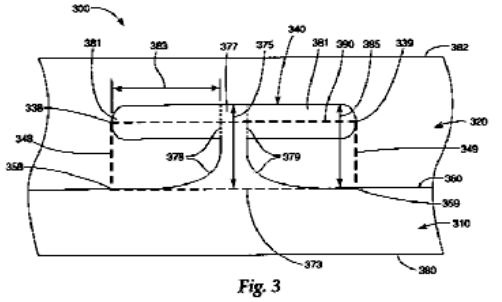

Fig. 3

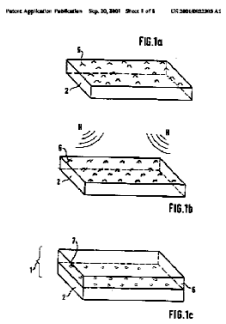

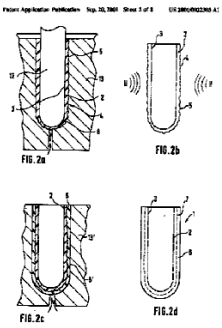

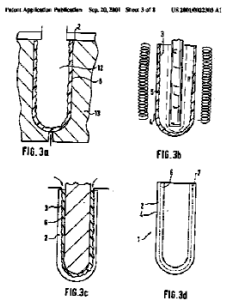

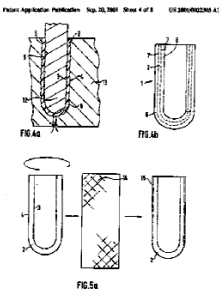

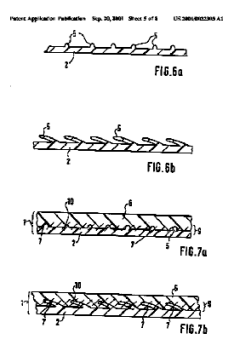

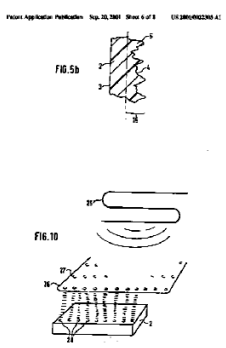

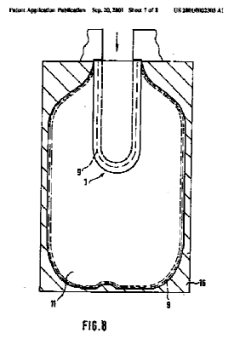

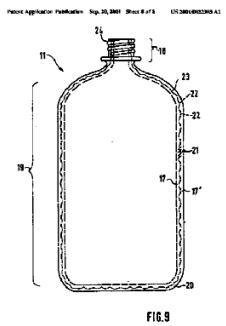

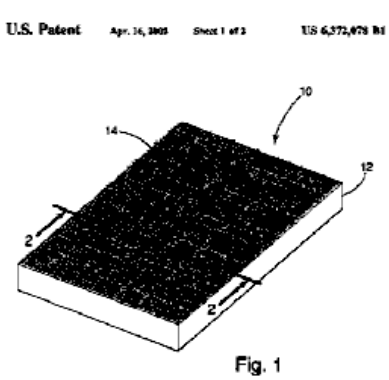

Fig. 1

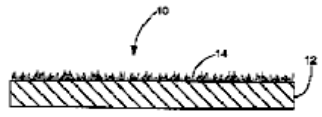

Fig. 2

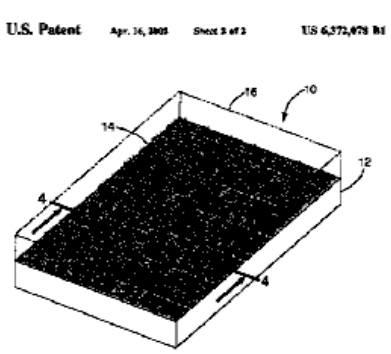

Fig. 3

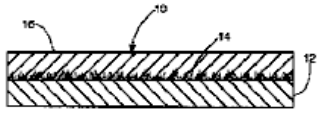

Fig. 4

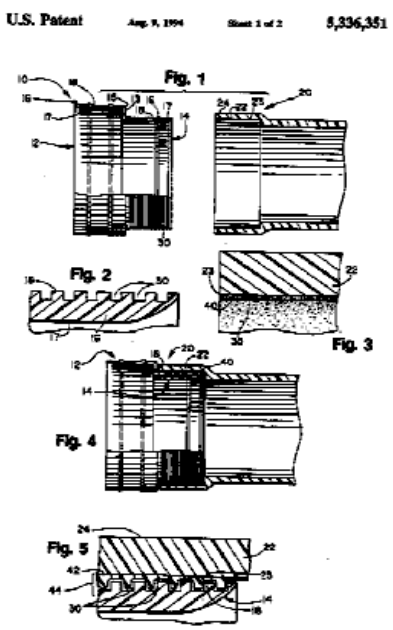
U.S. Patent
5,336,351
Fig. 1
Fig. 2
Fig. 3
Fig. 4
Fig. 5

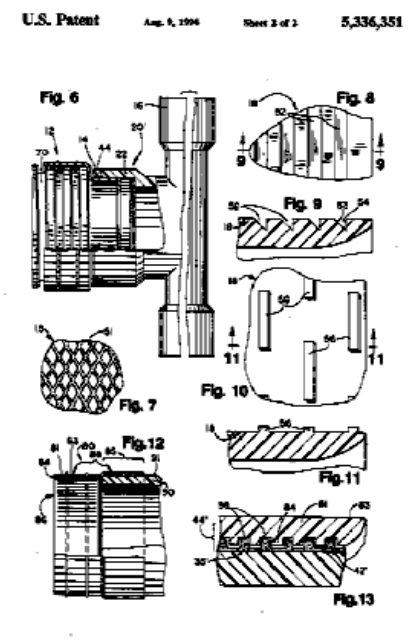
U.S. Patent
5,336,351
Fig. 6
Fig. 7
Fig. 8
Fig. 9
Fig. 10
Fig.11
Fig.12
Fig.13

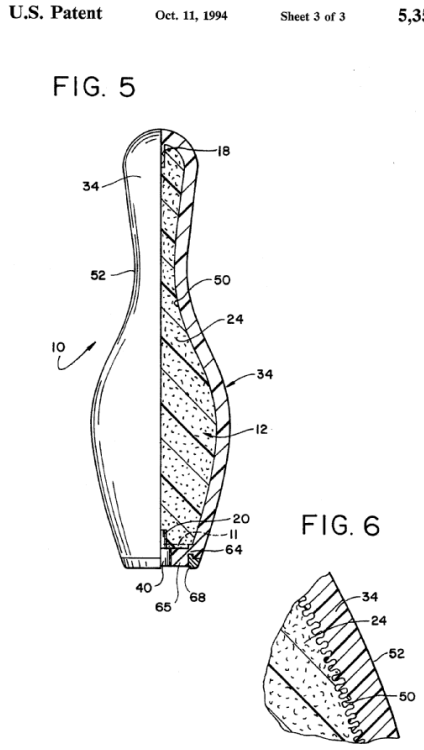
U.S. Patent
Oct. 11, 1994
Sheet 3 of 3
5,354,239
FIG. 5
18
34
52
50
24
10
34
12
20
11
64
40
65
68
FIG. 6
34
24
52
50

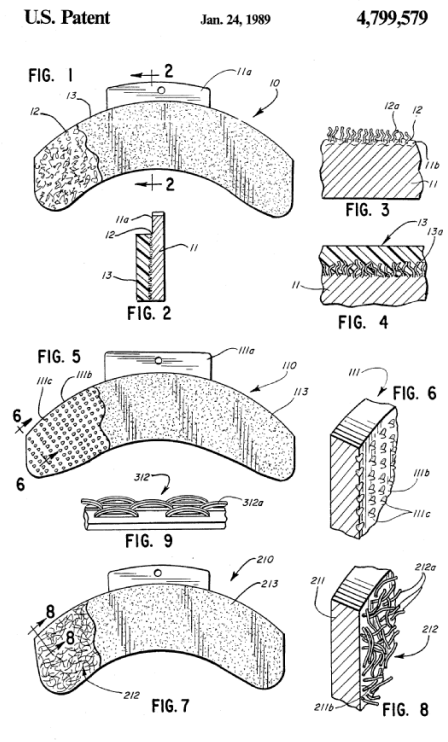
U.S. Patent Jan. 24, 1989 4,799,579
FIG. 1
FIG. 2
FIG. 3
FIG. 4
FIG. 5
FIG. 6
FIG. 7
FIG. 8
FIG. 9

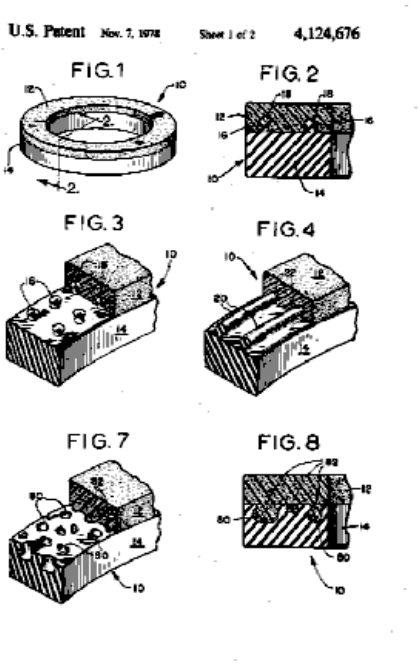
U.S. Patent Nov. 7, 1978 Sheet 1 of 2 4,124,676
FIG. 1
FIG. 2
FIG. 3
FIG. 4
FIG. 7
FIG. 8

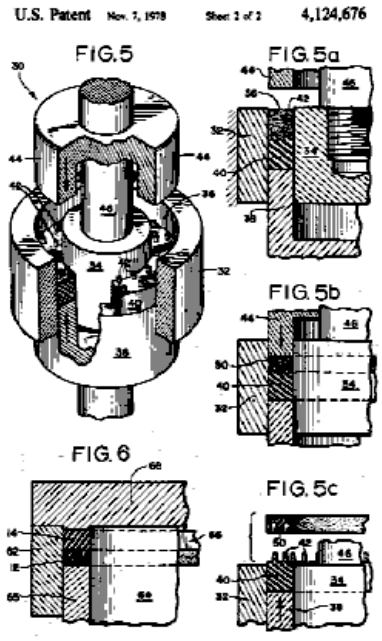
U.S. Patent Nov. 7, 1978 Sheet 2 of 2 4,124,676
FIG. 5
FIG. 5a
FIG. 5b
FIG. 6
FIG. 5c

B29C 37/0085

{by means of openings in the layers (joining through openings B29C 66/304)}

Definition statement

This place covers:

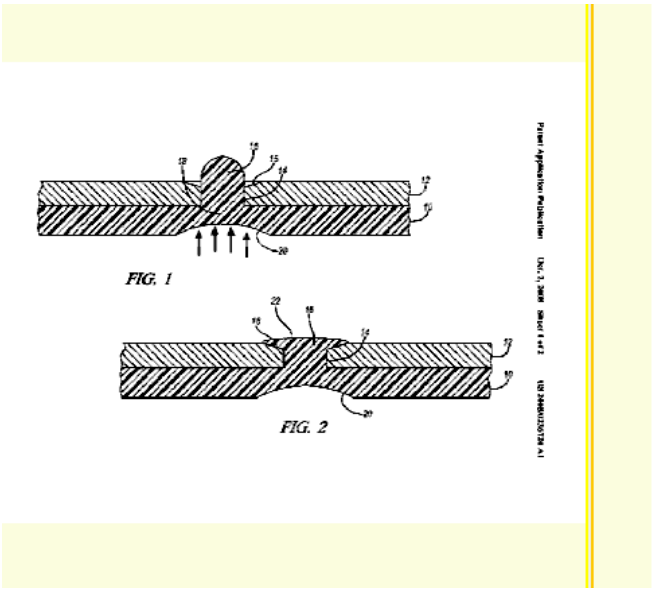

FIG. 1

FIG. 2

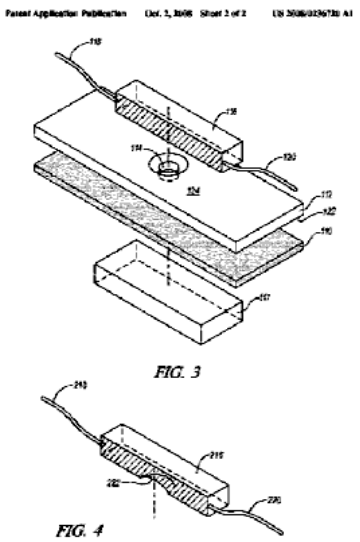

FIG. 3

FIG. 4

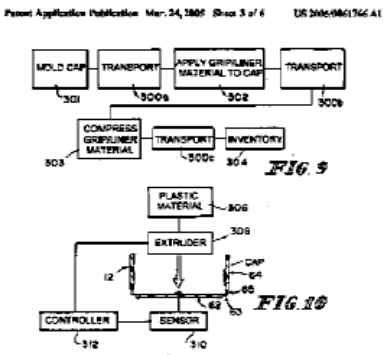

FIG. 9

FIG. 10

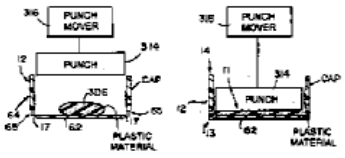

FIG. 11

FIG. 12

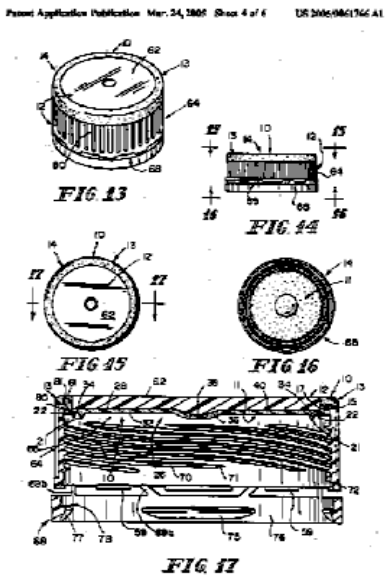

FIG. 13

FIG. 14

FIG. 15

FIG. 16

FIG. 17

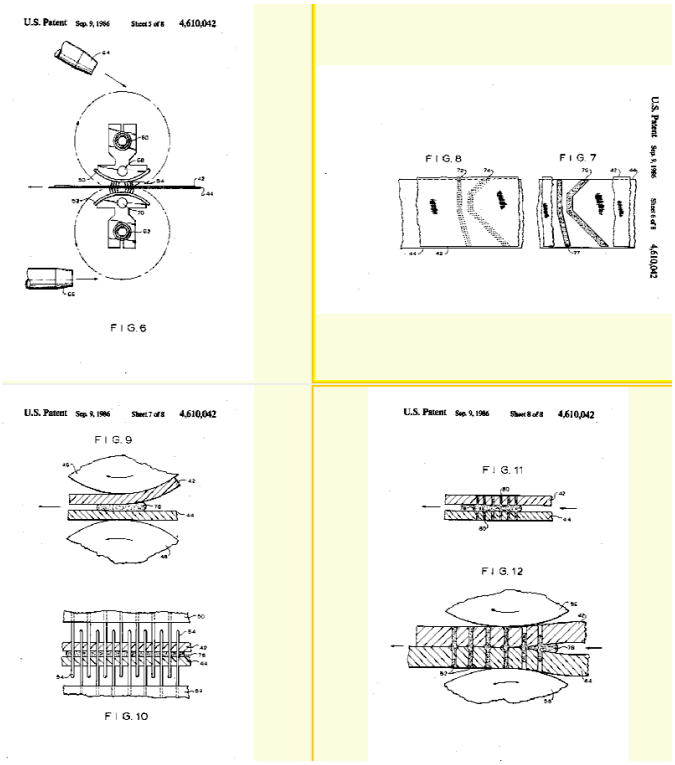

References

Informative references

Attention is drawn to the following places, which may be of interest for search:

Injection moulding in or through a hole in the article	B29C 45/14344
Joining by riveting	B29C 65/60

B29C 37/0089

{Sealing devices placed between articles and treatment installations during moulding or shaping, e.g. sealing off the entrance or exit of ovens or irradiation rooms, connections between rooms at different pressures}

Definition statement

This place covers:

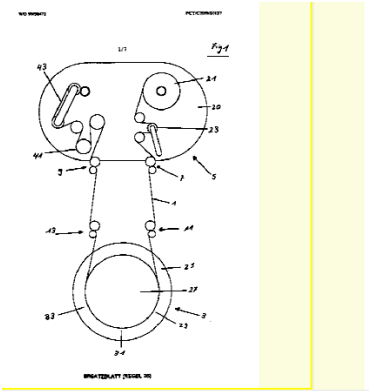

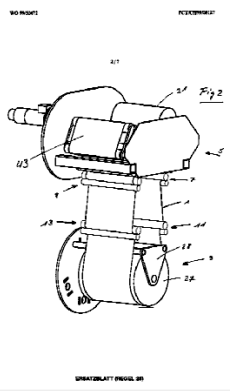

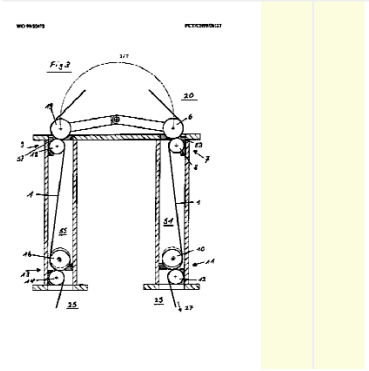

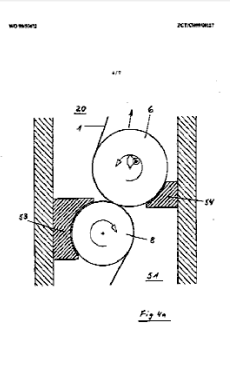

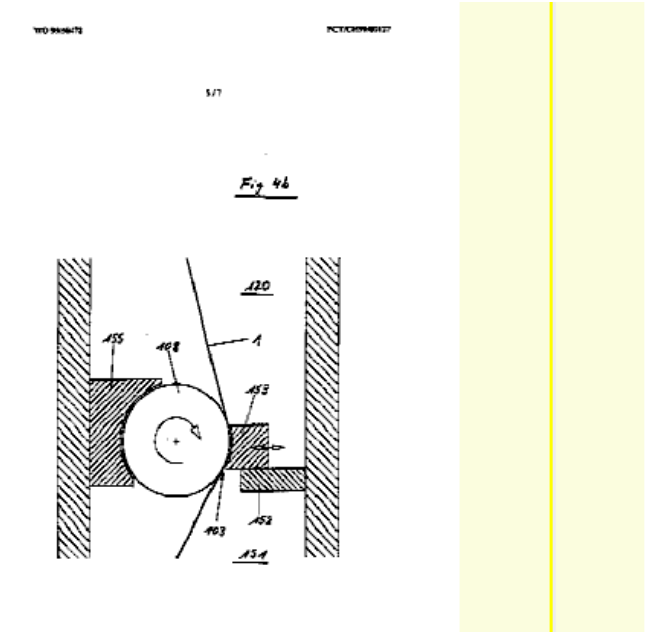

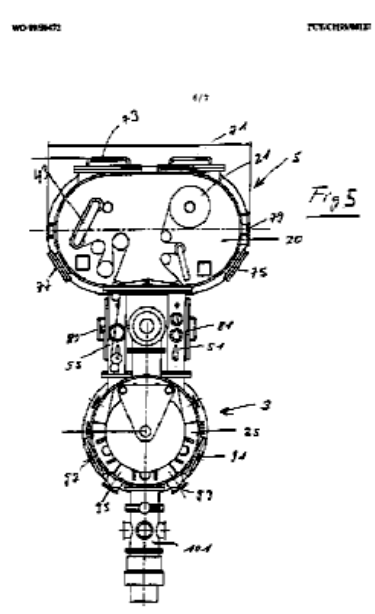

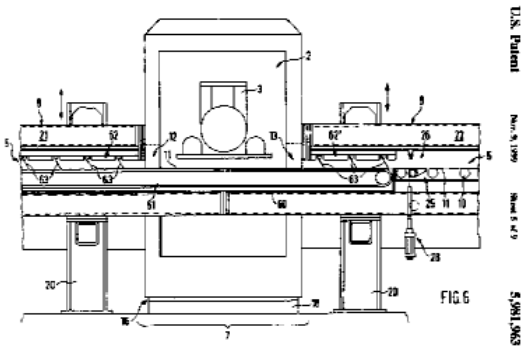
U.S. Patent
FIG.6
5,981,963

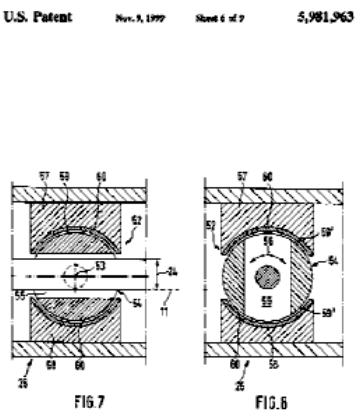
U.S. Patent
5,981,963
FIG.7
FIG.6

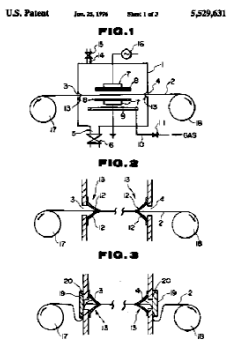
U.S. Patent
5,529,631
FIG.1
FIG.2
FIG.3

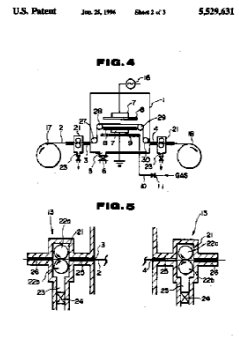
U.S. Patent
5,529,631
FIG.4
FIG.5

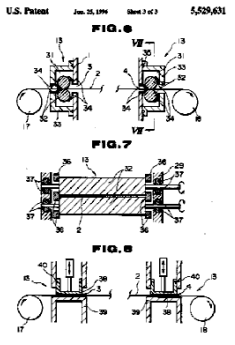
U.S. Patent
5,529,631
FIG.6
FIG.7
FIG.8

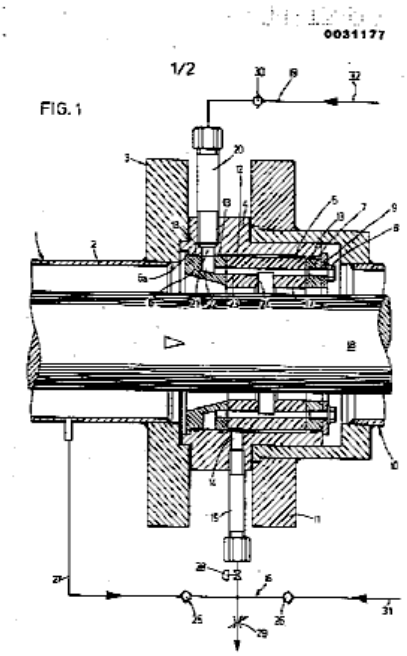

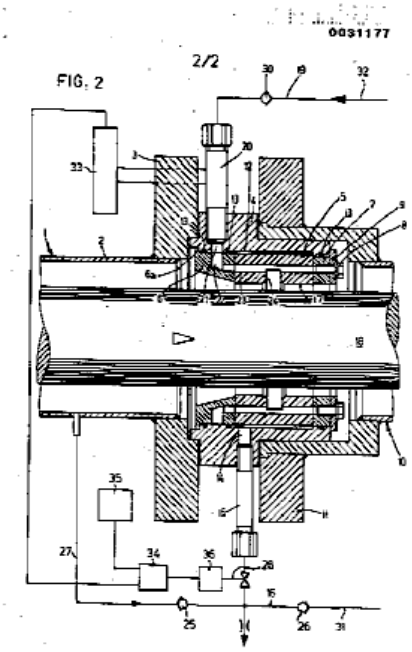

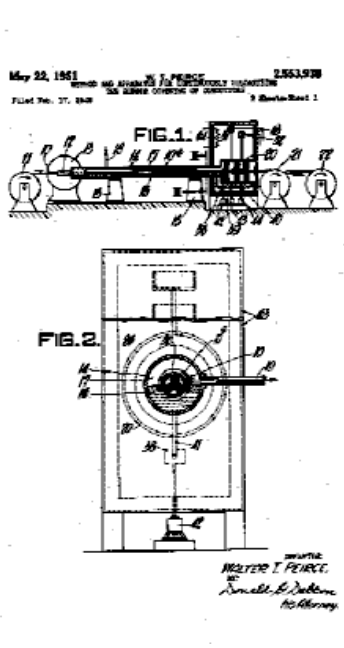

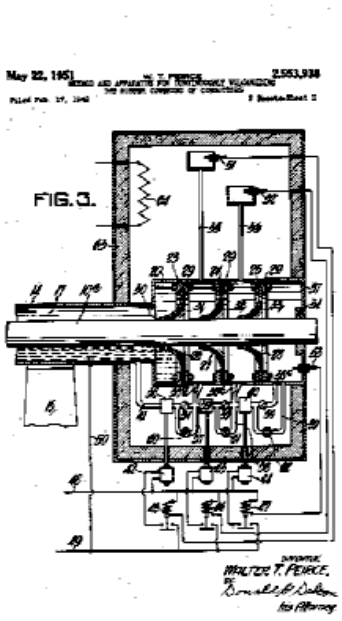

References

Informative references

Attention is drawn to the following places, which may be of interest for search:

Sealings between relatively moving surfaces which permits material to be continuously conveyed	F16J 15/168

B29C 37/0092

{Drying moulded articles or half products, e.g. preforms, during or after moulding or cooling}

Definition statement

This place covers:

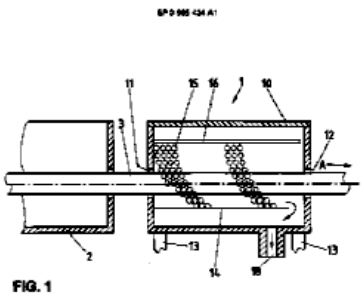

FIG. 1

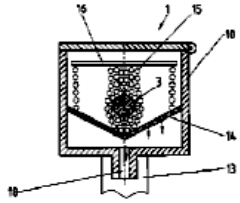

FIG. 2

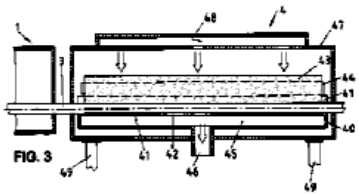

FIG. 3

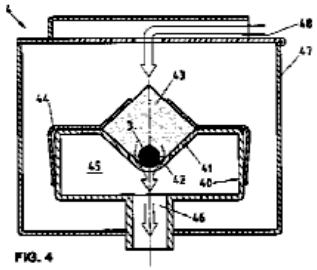

FIG. 4

EP 0 822 380 A2

Fig.1

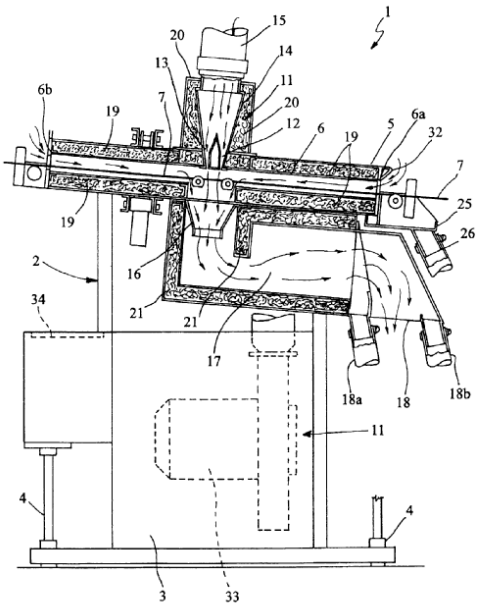

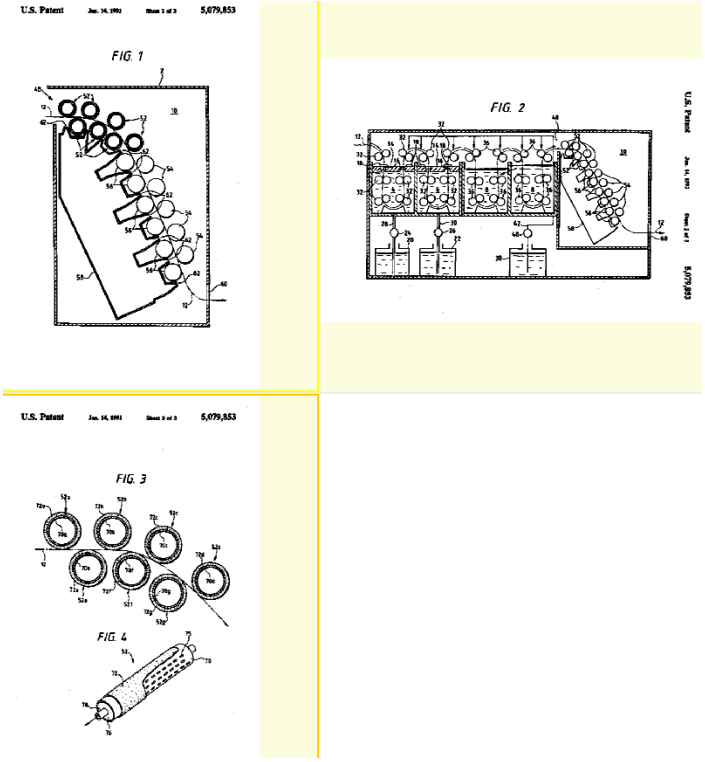

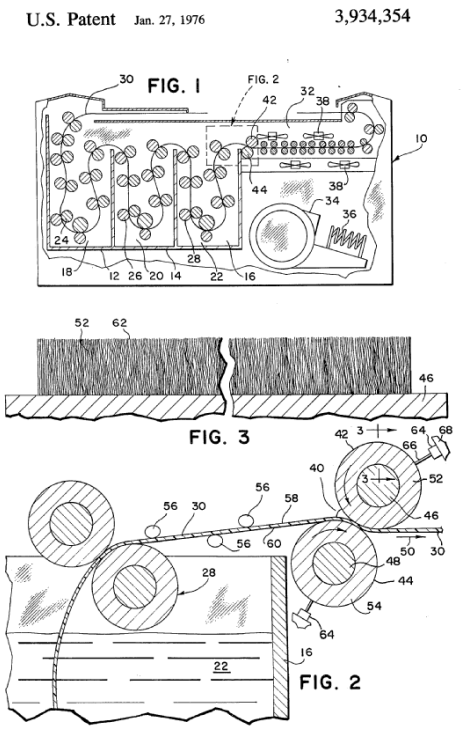

References

Informative references

Attention is drawn to the following places, which may be of interest for search:

Drying in general	F26B

B29C 37/02

Deburring or deflashing {(thermal deburring in general B23D 79/005)}

Definition statement

This place covers:

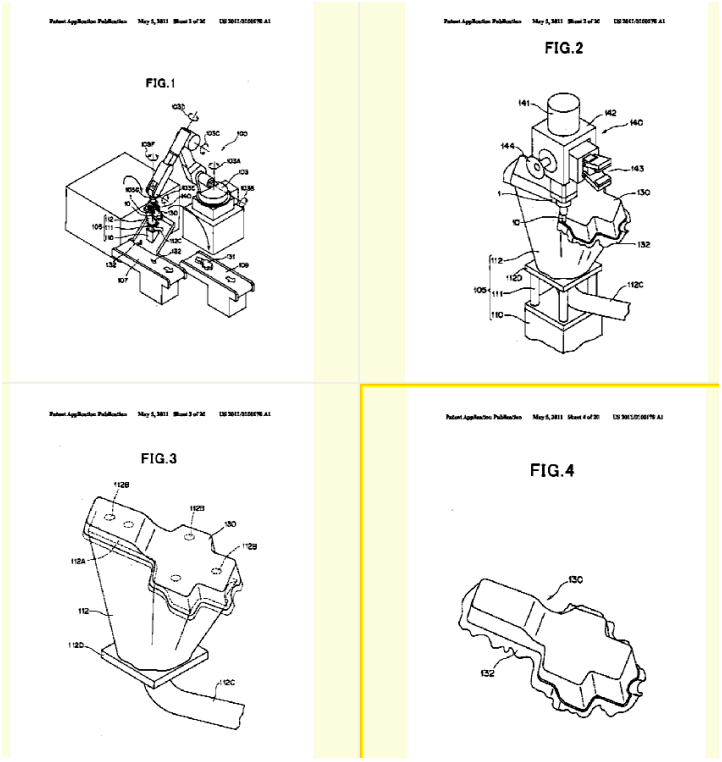

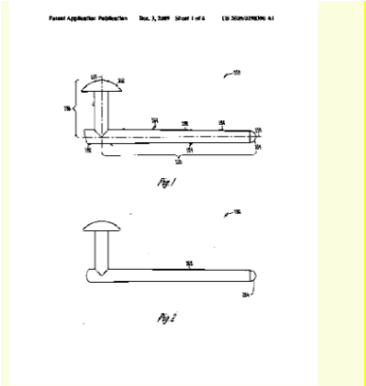

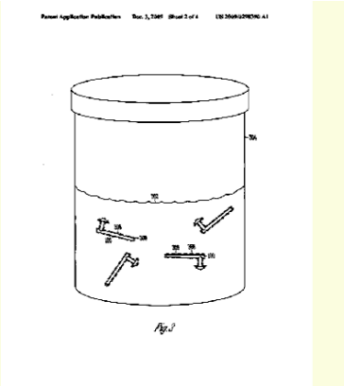



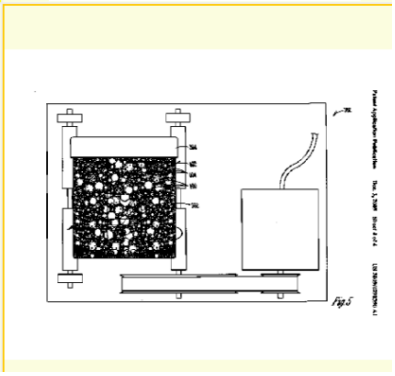

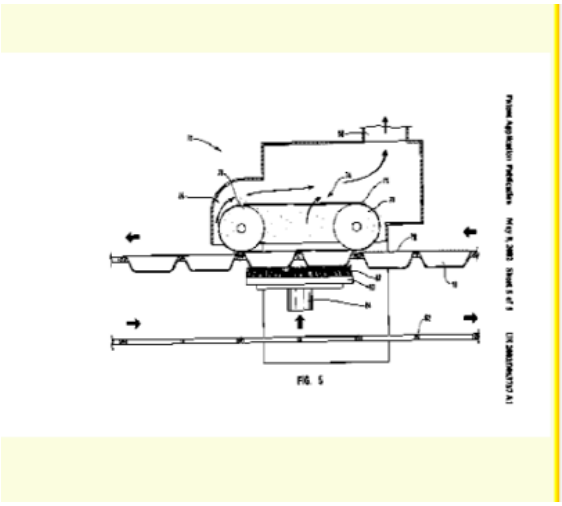

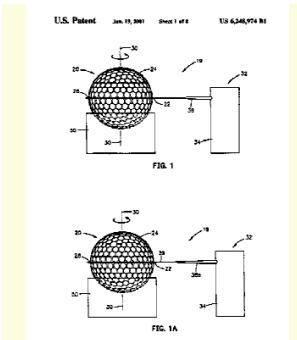
U.S. Patent
FIG. 1
FIG. 1A

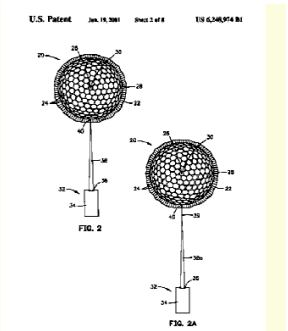
U.S. Patent
FIG. 2
FIG. 2A

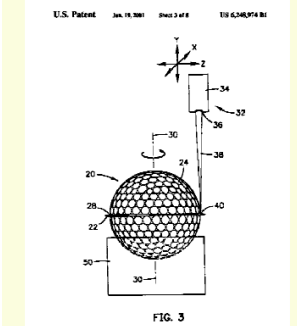
U.S. Patent
FIG. 3

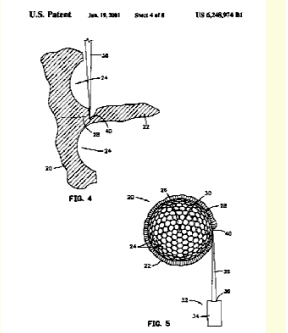
U.S. Patent
FIG. 4
FIG. 5

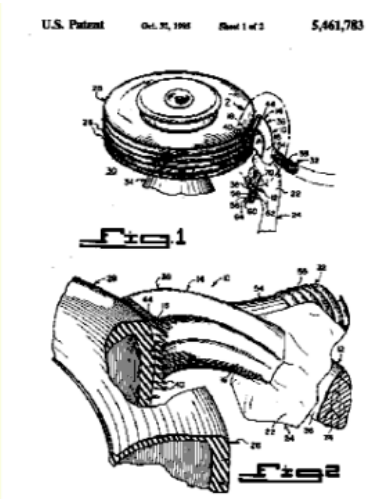
U.S. Patent
5,461,783
Fig.1
Fig.2

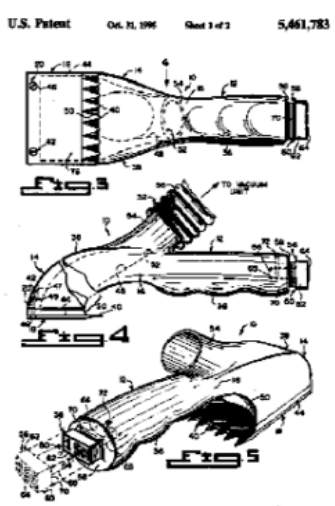
U.S. Patent
5,461,783
Fig.3
Fig.4
Fig.5

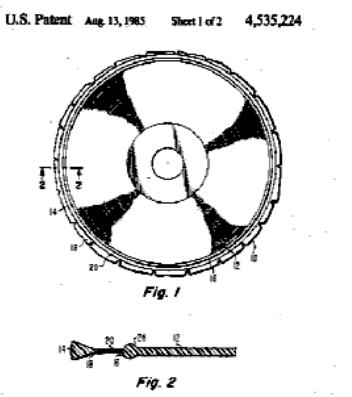

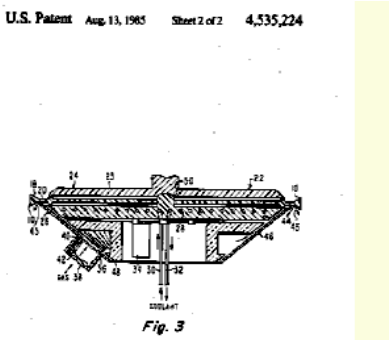

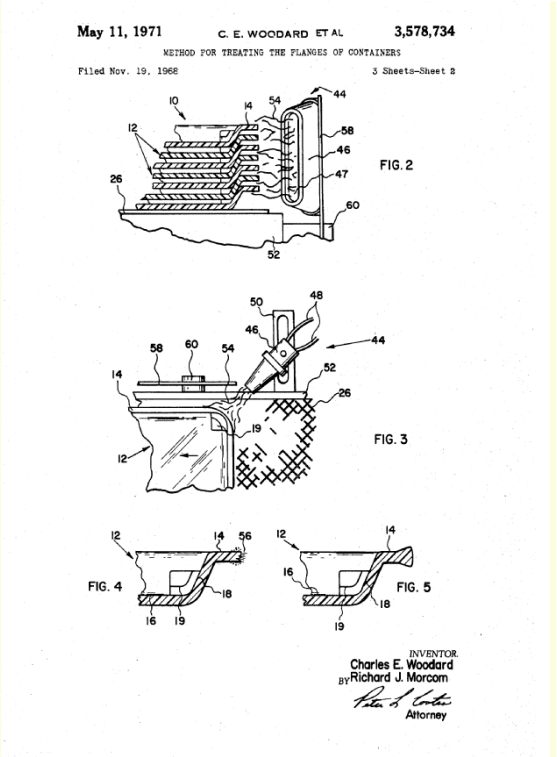

References

Informative references

Attention is drawn to the following places, which may be of interest for search:

Blow-moulding; deflashing outside the mould; deflashing the neck portion	B29C 49/72
Cutting work characterised by the nature of the cutting made	B29C 70/00
Method, machines, or devices for working metals by removal of material for thermal deburring	B23D 79/005
Machines or devices designed for grinding edges or bevels on works or for removing burrs characterised by a special design for grinding plastic materials	B24B 9/20
Methods for use of abrasive blasting for polishing surfaces for deburring	**B24C/08B**

Abrasive blasting machines or devices	B24C 3/00
Machines or devices designed for polishing or abrading surfaces on work by means of tumbling appartus	**B24D31/00**

B29C 39/00

Shaping by casting, i.e. introducing the moulding material into a mould or between confining surfaces without significant moulding pressure; Apparatus therefor (B29C 41/00 takes precedence)

Definition statement

This place covers:

Low or zero pressure casting methods of polymers or their pre-cursors into a mould or between confining surfaces, apparatus and articles obtained by casting, when these articles are characterised by the casting method.

References

Limiting references

This place does not cover:

Spin casting	B29C 41/045
Casting of dental prostheses	A61C 13/20
Casting of membranes,	B01D 67/0013
Centrifugal casting specially adapted for tyres or parts thereof	B29D 30/0679
Casting of microstructured devices	B81C 99/0085

Informative references

Attention is drawn to the following places, which may be of interest for search:

Shaping by internal pressure generated in the material, e.g. swelling, foaming	B29C 44/00
Joining by applying molten plastics or by moulding	B29C 65/40, B29C 65/42, B29C 65/70
Screen moulding	B29C 67/08
Molding wax	B29C 67/241
Liquid injection molding of liquid silicone rubbers, polyurethanes and other highly reactive materials under high pressure	B29C 67/246
Spinning of moulds for a specific filler concentration or distribution of the filler	B29C 70/64
Encapsulating inserts having non-encapsulated projections, e.g. terminal portions of electrical components	B29C 70/72
Moulding sealings into closures	B29C 70/80
Casting of foodstuff or confectionary	e.g. A23G 3/2023, A23G 1/205
Casting cosmetic material, such as lipsticks	A45D 40/16
Making brushes by casting a body around bristles	A46D 3/005

Methods for making crowns for teeth	A61C 5/77
Encapsulating hollow fibres, e.g. for filters,	B01D 63/022
Metal casting	B22D 17/00
Casting of ceramics or other cementitious material	B28B 1/00, C04B 33/28
Moulding, e.g. casting of optical elements, e.g. lenses, prisms	B29D 11/00413
Designs imitating natural patterns	B44F 9/00
Manufacture of films or sheets	C08J 5/18
Encapsulation, potting and similar processes used in electronics	H01L 21/56, H01F 41/005, H01F 41/127, H01L 23/28, H05K 3/284, H05K 3/101

Synonyms and Keywords

In patent documents, the following words/expressions are often used as synonyms:

- "casting", "moulding", "pouring", "potting" and "encapsulating"

B29C 41/00

Shaping by coating a mould, core or other substrate, i.e. by depositing material and stripping-off the shaped article; Apparatus therefor (with compacting pressure B29C 43/00 {; by lay-up of reinforcement of substantial or continuous length B29C 70/30})

Definition statement

This place covers:

depositing material and stripping-off the shaped article

Relationships with other classification places

Processes for applying liquids or other fluent materials are provided in B05D 1/00 e.g. coating by rotation: B05D 1/002; coating by spin coating B05D 1/005; coating by dipping B05D 1/18; coating performed by gravity only B05D 1/30.

The difference with the processes provided in the group B29C 41/00, is that in addition to coating step, a step of stripping of the article is provided (cf. the title of B29C 41/00 "...i.e. by depositing material and stripping-off the shaped article...")

References

Limiting references

This place does not cover:

Shaping by spraying of fibres on a mould, former or core:	B29C 70/30

Informative references

Attention is drawn to the following places, which may be of interest for search:

Spinning the mould for a specific filler concentration or distribution	B29C 70/64

Gloves	A41D 19/00, A47L 13/18, A61B 42/10
Automotive skins	B60R 13/00

Synonyms and Keywords

In patent documents, the following words/expressions are often used as synonyms:

- spraying, slush moulding or casting, rotational moulding, rotomoulding, moulding by spinning, spin casting, centrifugal casting.

B29C 43/00

Compression moulding, i.e. applying external pressure to flow the moulding material; Apparatus therefor {(by liberation of internal stresses B29C 61/006)}

Definition statement

This place covers:

Compression moulding refers to shaping polymeric materials by using moulding devices movable against the material to apply pressure for shaping and achieving a residual filling of a cavity;

Continuous compression moulding refers to making indefinite articles by using rotatable devices, e.g. wheels or rollers or calenders;

Devices to supply the material to the compression moulding device.

Relationships with other classification places

Related moulding processes are:

- Transfer moulding, i.e. transferring the required volume of moulding material by a plunger from a "shot" cavity into a mould cavity. Transfer moulding is classified in B29C 45/02.
- Injection compression moulding, i.e. injecting the polymeric material under pressure into a mould followed by moving the mould or mould parts to compress the material to achieve filling of the cavity and the final shape of the article, wherein initially the mould can be open or closed and/ or the cavity can be in a state with enlarged or reduced size. Injection compression moulding is classified in B29C 45/561.
- Shaping by thermoforming (i.e. shaping sheets or sheet-like preforms after heating), e.g. shaping sheets by matched moulds or by deep-drawing and apparatus therefor. Thermoforming is classified in B29C 51/00.
- Surface shaping of already moulded polymeric articles, e.g. by embossing and apparatus therefor. In the case of mechanical embossing, the surface shaping requires a reheating step for the surface to be embossed. Surface shaping of already moulded polymeric articles is classified in B29C 59/00.
- Shaping composites, i.e. plastics material comprising reinforcements, fillers or preformed parts, e.g. inserts, are classified in B29C 70/00. The use of moulding compounds comprising chopped or short fibres are classified in the moulding technique used, e.g. for compression moulding are classified in B29C 43/003 or B29C 43/006, for injection moulding using fibre reinforcements are classified in B29C 45/0005 or for extrusion moulding using fibre reinforcements are classified in B29C 48/2886.

References

Limiting references

This place does not cover:

Shaping by liberation of internal stresses, the force created by the liberation of the internal stresses being used for compression moulding	B29C 61/006

Informative references

Attention is drawn to the following places, which may be of interest for search:

Manufacturing of articles by compacting or sintering metallic powders	B22F 3/00
Shaping clay or other ceramic compositions using presses	B28B 3/00
Presses in general	B30B
Photomechanical production of textured or patterned surfaces by imprinting or stamping whereby the pattern is fixed via light or thermal curing.	G03F 7/002

Glossary of terms

In this place, the following terms or expressions are used with the meaning indicated:

Compression moulding	shaping of polymeric materials by using moulding devices movable against the material to apply pressure for shaping and achieving residual filling of a cavity
Continuous compression moulding	making of indefinite articles by shaping polymeric materials using rotatable devices, e.g. calenders or rollers or wheels

Synonyms and Keywords

In patent documents, the following words/expressions are often used with the meaning indicated:

"compacting"	"compression moulding".

B29C 43/003

{characterised by the choice of material}

Definition statement

This place covers:

compression moulding processes characterised by the choice of material, e.g. using organic, inorganic or mineral fillers or fibres, using plasticised particulate materials bonded by resin, recycled materials

References

Informative references

Attention is drawn to the following places, which may be of interest for search:

Moulding processes characterised by the choice of the material, e.g. wax, aggregates:	B29C 67/24
Pressing of glass:	C03B 11/00

Making brake linings:	F16D 69/00, F16D 2250/0023

B29C 43/006

{Pressing and sintering powders, granules or fibres}

Definition statement

This place covers:

e.g. pressing fleeces made of thermoplastic fibres;

hot-fusion under pressure particles, granules or fibres etc, particles are heated and compressed to partial melt and bond together; thermal bonding under pressure; shaping monoliths

References

Informative references

Attention is drawn to the following places, which may be of interest for search:

Sintering (without pressure)	B29C 67/04
Surface fusion and bonding of particles to form voids	B29C 67/205
Moulding processes characterised by the choice of mineral aggregates bonded with resin as the moulding material	B29C 67/242
Prostheses	A61F 2/02
Sintering metallic powders	B22F 3/10
Preheating powders	B29B 13/00
Partial melting of one or more layers to form the bond	B32B 37/04
Sintering fibres	D04H 1/005, D04H 3/16
Making brake linings	F16D 69/00, F16D 2250/0023

B29C 43/021

{characterised by the shape of the surface}

Definition statement

This place covers:

making articles characterised by the shape of the surface

References

Informative references

Attention is drawn to the following places, which may be of interest for search:

Grooves	B29C 37/0053
Folding lines	B29C 53/06
Surface shaping	B29C 59/00
Moulding of lenses	B29D 11/00009

Moulding of Fresnel lenses	B29D 11/00269
Imprinting	B41F
Embossing machines	B44B 5/00
Decorative arts	B44C
Packages or encapsulation of microstructural systems	B81B 7/0032
Processes for packaging: MEMS	B81C 1/00261
Fresnel lenses	G02B 3/08
Apparatus for making LCD's	G02F 1/1303
Lithographic processes using stamping	G03F 7/0002
Fine patterning magnetic record carriers	G11B 5/84
Optical record carriers	G11B 7/26
Masters, stampers:	G11B 7/261, G11B 7/263
Making masks on semiconductor bodies	H01L 21/027
Apparatus for mechanical treatment of semiconductors	H01L 21/67092
Manufacturing printed circuits	H05K 3/0014
Laminating circuit boards	H05K 3/4611

B29C 2043/022

{having locally depressed lines, e.g. hinges}

References

Informative references

Attention is drawn to the following places, which may be of interest for search:

Moulds or cores characterised by the location of the parting line of the mould parts	B29C 33/005
Moulding single grooves or ribs, e.g. tear lines	B29C 37/0057
Forming folding lines by pressing or scoring	B29C 53/06

B29C 43/027

{having an axis of symmetry (B29C 43/102 takes precedence)}

Definition statement

This place covers:

Compression moulding of symmetrical articles, e.g. balls or ring-like shaped articles or tubular articles.

References

Limiting references

This place does not cover:

Isostatic pressing using rigid mould parts specially adapted for moulding articles having an axis of symmetry	B29C 43/102

Informative references

Attention is drawn to the following places, which may be of interest for search:

Apparatus or methods for manufacturing balls	A63B 45/00
Making spherical articles, e.g. balls	B29D 22/04
Moulded articles with a profiled transverse cross-section	B29L 2031/003
Ring or ring-like shaped moulded articles	B29L 2031/7096

B29C 43/04

using movable moulds

Definition statement

This place covers:

movable moulds with the movement being other than open, closing, clamping, or pressurising, e.g. for curing in a closed mould outside the pressure exerting means, transferring moulds or mould parts between a feeding and a compressing station

References

Informative references

Attention is drawn to the following places, which may be of interest for search:

Handling of moulds in general	B29C 31/006
Movable moulds in general	B29C 33/34
Movable moulds for injection moulding	B29C 45/04
Movable moulds for blow moulding	B29C 49/30

B29C 43/06

continuously movable {in one direction, e.g. mounted on chains, belts}

Definition statement

This place covers:

e.g. moulds or mould parts travelling continuously along a path

B29C 43/08

with circular movement {, e.g. mounted on rolls, turntables}

Definition statement

This place covers:

moulds or mould parts mounted on rotating supporting constuction, rotary machines, e.g. turntables, drums, carousels, star wheels

References

Informative references

Attention is drawn to the following places, which may be of interest for search:

For injection moulding	B29C 45/06
For blow moulding	B29C 49/36
For presses	B30B 11/08

B29C 43/10

Isostatic pressing, i.e. using non-rigid pressure-exerting members against rigid parts or dies

Definition statement

This place covers:

Flexible pressure exerting means, e.g. material characteristics of the pressure exerting member (e.g. special density, composition or syntactic foam).

References

Informative references

Attention is drawn to the following places, which may be of interest for search:

Flexible collapsible moulds for facilitating demoulding	B29C 33/50
Applying pressure through membranes	B29C 51/28
Vacuum bagging	B29C 70/44
Hydroforming	B21D 26/033
Bladders for making tyres	B29D 30/0654
Flexible pressing means	B30B 5/02
Membrane presses	B30B 9/22
Isostatic pressing in general	B30B 11/001
Laminating glass sheets	B32B 17/10853
Vacuum laminating	B32B 37/1018

B29C 43/12

using bags surrounding the moulding material {or using membranes contacting the moulding material}

Definition statement

This place covers:

Compression moulding processes by using vacuum or inflatable bags.

References

Application-oriented references

Examples of places where the subject matter of this place is covered when specially adapted, used for a particular purpose, or incorporated in a larger system:

Shaping or impregnating composites of definitive length by compression using isostatic pressure	B29C 70/44
Flexible cores for vulcanising tyres	B29D 30/0654

B29C 2043/141

{for making single layer articles}

References

Informative references

Attention is drawn to the following places, which may be of interest for search:

For indefinite articles	B29C 43/26

B29C 2043/181

{encapsulated}

References

Informative references

Attention is drawn to the following places, which may be of interest for search:

Outsert moulding	B29C 70/74

B29C 2043/182

{completely}

References

Informative references

Attention is drawn to the following places, which may be of interest for search:

Completely encapsulating inserts	B29C 70/70

B29C 2043/185

{using adhesives}

References

Informative references

Attention is drawn to the following places, which may be of interest for search:

Joining of preformed parts using adhesives	B29C 65/48

B29C 2043/186

{hot-melt or heat activated adhesives}

References

Informative references

Attention is drawn to the following places, which may be of interest for search:

Joining of preformed parts by heating, with or without pressure, and applying molten plastics	B29C 65/40
Joining of preformed parts using adhesives	B29C 65/48

B29C 2043/188

{thermosetting adhesives, e.g. polyurethane adhesives}

References

Informative references

Attention is drawn to the following places, which may be of interest for search:

Joining of preformed parts by heating	B29C 65/02

B29C 43/22

of articles of indefinite length

References

Application-oriented references

Examples of places where the subject matter of this place is covered when specially adapted, used for a particular purpose, or incorporated in a larger system:

Shaping or impregnating composites by compression for producing articles of indefinite length	B29C 70/50

Informative references

Attention is drawn to the following places, which may be of interest for search:

Floor coverings obtained by sintering or gluing the granules together	D06N 7/0057

B29C 43/24

Calendering

Definition statement

This place covers:

e.g. measuring and regulating calender banks

B29C 43/32

Component parts, details or accessories; Auxiliary operations

Definition statement

This place covers:

Pressure exerting means or methods (mechanical, e.g. deformable nets or springs or non-mechanical, e.g. thermal expansion), e.g. pressure equalising means or methods.

References

Informative references

Attention is drawn to the following places, which may be of interest for search:

Material characteristics of the isostatic pressure exerting member	B29C 43/10

B29C 2043/3205

{Particular pressure exerting means for making definite articles}

Definition statement

This place covers:

Single pressing elements, e.g. magnets or vibrating elements.

References

Informative references

Attention is drawn to the following places, which may be of interest for search:

Compression moulds as such	B29C 43/36

B29C 43/34

Feeding the material to the mould or the compression means {(B29C 43/085 takes precedence)}

References

Limiting references

This place does not cover:

Feeding material in a continuous form to continuous movable compression moulds	B29C 43/085

Informative references

Attention is drawn to the following places, which may be of interest for search:

Feeding of the material to be moulded in general	B29C 31/04

B29C 2043/3427

{hopper, vessel, chute, tube, conveying screw, for material in discrete form, e.g. particles or powder or fibres}

References

Informative references

Attention is drawn to the following places, which may be of interest for search:

Dispensing from vessels	B29C 31/02

B29C 2043/3433

{using dispensing heads, e.g. extruders, placed over or apart from the moulds}

References

Informative references

Attention is drawn to the following places, which may be of interest for search:

Feeding using dispensing heads	B29C 31/042
Applying fluent material for coatings	B05D 1/26
Extrusion coating	B05D 1/265

B29C 2043/3438

{moving during dispensing over the moulds, e.g. laying up}

References

Informative references

Attention is drawn to the following places, which may be of interest for search:

Feeding using moving dispensing heads	B29C 31/044
Applying fluent material for coatings	B05D 1/26
Extrusion coating	B05D 1/265

B29C 2043/3444

{using pressurising feeding means located in the mould, e.g. plungers or pistons}

References

Informative references

Attention is drawn to the following places, which may be of interest for search:

Injection-compression moulding	B29C 45/561

B29C 2043/3466

{using rotating supports, e.g. turntables or drums}

References

Informative references

Attention is drawn to the following places, which may be of interest for search:

Feeding in general by using volumetric measuring chambers moving between a charging station and a discharge station	B29C 31/065
Turntables as movable moulds	B29C 43/08
Feeding materials to moulding presses	B30B 15/302
Transfer turntables	B65G 47/80

B29C 2043/3472

{using star wheels comprising arms}

References

Informative references

Attention is drawn to the following places, which may be of interest for search:

Transfer stars	B65G 47/84

B29C 2043/3477

{centrally fed, e.g. feeding the material in the center of the mould turntables}

References

Informative references

Attention is drawn to the following places, which may be of interest for search:

Turntables as movable moulds	B29C 43/08

B29C 2043/3602

{with means for positioning, fastening or clamping the material to be formed or preforms inside the mould}

References

Informative references

Attention is drawn to the following places, which may be of interest for search:

Moulds with incorporated means for positioning inserts	B29C 33/14
Positioning articles in the mould for injection moulding	B29C 45/14065

B29C 2043/3615

{Forming elements, e.g. mandrels or rams or stampers or pistons or plungers or punching devices}

References

Informative references

Attention is drawn to the following places, which may be of interest for search:

Moulding lenses	B29D 11/00413
Ram pressing	B30B 11/02
Ram press cooperating with fixed mould	B30B 11/04
Forming pockets in sheets	B65B 47/04

B29C 43/3642

{Bags, bleeder sheets or cauls for isostatic pressing}

References

Informative references

Attention is drawn to the following places, which may be of interest for search:

Flexible cores for vulcanising tyres	B29D 30/0654

B29C 2043/3644

{Vacuum bags; Details thereof, e.g. fixing or clamping}

References

Informative references

Attention is drawn to the following places, which may be of interest for search:

Applying pressure through membranes	B29C 51/28
Vacuum bag-moulding	B29C 70/44
Bladders for making tyres	B29D 30/0601
Flexible pressing means	B30B 5/02
Membrane press	B30B 9/22
Vacuum laminating	B32B 37/1018

B29C 2043/3647

{Membranes, diaphragms}

References

Informative references

Attention is drawn to the following places, which may be of interest for search:

Applying pressure through membranes	B29C 51/28
Vacuum bagging	B29C 70/44
Bladders for making tyres	B29D 30/0601
Flexible pressing means	B30B 5/02
Membrane press	B30B 9/22
Vacuum laminating	B32B 37/1018

B29C 2043/3649

{Inflatable bladders using gas or fluid and related details}

References

Informative references

Attention is drawn to the following places, which may be of interest for search:

Flexible moulds	B29C 33/50
Deep drawing membranes	B29C 51/28
Vacuum bagging	B29C 70/44
Bladders for making tyres	B29D 30/0601
Flexible pressing means	B30B 5/02
Membrane press	B30B 9/22
Vacuum laminating	B32B 37/1018

B29C 2043/3652

{Elastic moulds or mould parts, e.g. cores or inserts}

References

Informative references

Attention is drawn to the following places, which may be of interest for search:

Elastomeric moulds	B29C 33/405
Plastic moulds or cores	B29C 33/50
Isostatic pressing	B29C 43/10

B29C 2043/3655

{Pressure transmitters, e.g. caul plates; pressure pads}

References

Informative references

Attention is drawn to the following places, which may be of interest for search:

Details of caul plates for shaping composites comprising reinforcements only	B29C 70/549

B29C 2043/3668

{destructible or fusible}

References

Informative references

Attention is drawn to the following places, which may be of interest for search:

Lost moulds	B29C 33/0016
Moulds for making articles with holes	B29C 33/0033
Fusible cores	B29C 33/52
Making porous articles	B22F 3/11

B29C 2043/3678

{on cylindrical supports with moulds or mould cavities provided on the periphery}

References

Informative references

Attention is drawn to the following places, which may be of interest for search:

Rollers for making indefinite articles	B29C 43/46
Roller presses	B30B 11/006
Turntable presses	B30B 11/08

B29C 2043/3689

{on a support table, e.g. flat disk-like tables having moulds on the periphery}

References

Informative references

Attention is drawn to the following places, which may be of interest for search:

Press rams on turntables	B30B 9/042
Presses adapted for forming shaped articles using a press ram cooperating with moulds on turntables	B30B 11/08

B29C 43/42

for undercut articles

References

Informative references

Attention is drawn to the following places, which may be of interest for search:

Moulds for moulding articles provided with holes in general	B29C 33/0033
Moulds for undercut articles in general	B29C 33/44
Manufacture of work pieces or articles provided with cavities or holes from metallic powder	B22F 5/10

B29C 2043/425

{mould parts or sliders being movable independently from the mould halves for making undercut portions}

References

Informative references

Attention is drawn to the following places, which may be of interest for search:

Collapsible cores or mandrels	B29C 33/485

B29C 43/44

Compression means for making articles of indefinite length

Definition statement

This place covers:

e.g. exchanging rollers or belts;

e.g. exchanging the coating of rollers;

e.g. adjusting rollers;

References

Informative references

Attention is drawn to the following places, which may be of interest for search:

driving arrangements for rollers	D21G 1/0006

B29C 43/46

Rollers

References

Informative references

Attention is drawn to the following places, which may be of interest for search:

rollers for mixing plastic material to be shaped	B29B 7/62
rollers with deflection compensating systems, e.g. hydraulic systems	F16C 13/028

B29C 2043/467

{plurality of rollers arranged in a specific manner in relation to each other}

References

Informative references

Attention is drawn to the following places, which may be of interest for search:

Calendering	B29C 43/24

B29C 2043/468

{take-off rollers, i.e. arranged adjacent a material feeding device}

References

Informative references

Attention is drawn to the following places, which may be of interest for search:

Calendering	B29C 43/24

B29C 2043/5015

{having undercuts or being threaded}

References

Informative references

Attention is drawn to the following places, which may be of interest for search:

Using a rotating movement to unscrew articles	B29C 33/446

B29C 2043/5023

{moving away}

References

Informative references

Attention is drawn to the following places, which may be of interest for search:

Collapsible cores or mandrels	B29C 33/485

B29C 2043/5084

{using rotary devices, e.g. turntables or carousels}

References

Informative references

Attention is drawn to the following places, which may be of interest for search:

Blow moulding machines rotatable about one axis	B29C 49/36
Handling means for blow moulding machines	B29C 49/4205

B29C 43/52

Heating or cooling

References

Informative references

Attention is drawn to the following places, which may be of interest for search:

Press plates with heating or cooling means	B30B 15/064

B29C 43/56

Compression moulding under special conditions, e.g. vacuum

Definition statement

This place covers:

e.g. compression moulding using vibrations;

e.g. compression moulding while steaming

B29C 2043/561

{under vacuum conditions}

References

Informative references

Attention is drawn to the following places, which may be of interest for search:

Moulds or cores with incorporated venting means	B29C 33/10
Vacuum bag-moulding	B29C 70/44
Vacuum laminating	B32B 37/1018

B29C 43/58

Measuring, controlling or regulating {(for bank adjustment in calendering B29C 43/245)}

Definition statement

This place covers:

- enabling a value, or its relation to a datum, to be determined in the sense of measuring as defined in Note 2 of class G01;
- affecting a variable of the compression moulding process in any way, e.g. changing its direction or its value, maintaining its constant or limiting its range of variation;
- maintaining a variable at a desired value or within a desired range of values;
- selecting a specific value for a parameter, e.g. temperature or pressure, that has a substantial influence on the compression moulding process.

The mere selection of optimum or workable values or ranges of values, without accompanying disclosure of the influence on the compression moulding process or its objective does not qualify for classification in this group.

References

Limiting references

This place does not cover:

Measuring and regulating calender parameters, e.g. bank quantity	B29C 43/245

B29C 2043/5841

{for accommodating variation in mould spacing or cavity volume during moulding}

References

Informative references

Attention is drawn to the following places, which may be of interest for search:

Compensating shrinkage	B29C 43/54

B29C 44/00

Shaping by internal pressure generated in the material, e.g. swelling or foaming {; Producing porous or cellular expanded plastics articles}

References

Limiting references

This place does not cover:

Chemical aspects of foaming	C08J 9/00

Informative references

Attention is drawn to the following places, which may be of interest for search:

Metal foams	B22D 25/005
Ceramic foams	C04B 38/00

Glossary of terms

In this place, the following terms or expressions are used with the meaning indicated:

reticulated	cell wall membranes are removed, leaving a framework only.

Synonyms and Keywords

In patent documents, the following words/expressions are often used with the meaning indicated:

"foaming"	"expanding" and "swelling".

B29C 44/04

consisting of at least two parts of chemically or physically different materials, e.g. having different densities

Definition statement

This place covers:

e.g. a soft, porous core covered by a skin or lining when they are made in the same procedure

References

Limiting references

This place does not cover:

incorporating preformed parts	B29C 44/12

B29C 44/182

{Filling flexible bags not having a particular shape}

References

Informative references

Attention is drawn to the following places, which may be of interest for search:

Filling cushion pads	B31D 5/0078

B29C 44/188

{Sealing off parts of the cavities}

References

Informative references

Attention is drawn to the following places, which may be of interest for search:

Insulating elements for vehicles	B60R 13/08
Foam in superstructures for vehicles	B62D 29/002

B29C 44/20

for articles of indefinite length

Definition statement

This place covers:

continuous processes, even if it is followed by a subdivision into separate articles

B29C 44/3415

{Heating or cooling}

Definition statement

This place covers:

particular characteristics of the heating or cooling method

B29C 44/3461

{Making or treating expandable particles}

References

Informative references

Attention is drawn to the following places, which may be of interest for search:

Feeding moulds with granules	B29C 44/445
Making granules	B29B 9/00
under-water, e.g. underwater pelletizers	B29B 9/065

B29C 44/445

{in the form of expandable granules, particles or beads}

References

Informative references

Attention is drawn to the following places, which may be of interest for search:

Making or treating expandable particles	B29C 44/3461

B29C 44/56

After-treatment of articles, e.g. for altering the shape

Definition statement

This place covers:

Characteristics of methods for working on an already foamed object

B29C 44/569

{Shaping and joining components with different densities or hardness}

Definition statement

This place covers:

e.g. putting a foam layer and a lining in a mould, followed by compression moulding and joining

B29C 44/588

{with means for venting, e.g. releasing foaming gas}

References

Informative references

Attention is drawn to the following places, which may be of interest for search:

Venting of moulds in general	B29C 33/10
Injection moulds with venting means	B29C 45/34

B29C 45/00

Injection moulding, i.e. forcing the required volume of moulding material through a nozzle into a closed mould; Apparatus therefor (injection blow-moulding B29C 49/06)

Definition statement

This place covers:

Injection moulding methods

Injection moulding apparatuses

Articles obtained by injection moulding, as far as these articles are characterised by the injection moulding method

References

Limiting references

This place does not cover:

Reaction injection moulding, liquid injection moulding	B29C 67/246

Special rules of classification

It is desired to identify the obtained articles and the applied materials by allocating the appropriate Indexing Codes as provided in the subclass B29K and B29L.

Particular attention should be paid to the break down Indexing Codes, that are available only at additional informative level.

B29C 45/0001

{characterised by the choice of material}

Definition statement

This place covers:

Injection moulding processes characterised by the plastic material. The group contains documents concerning injection moulding with a special material or a process adapted for a certain material.

References

Limiting references

This place does not cover:

Injection moulding characterised by the use of fibres.	B29C 45/0005
Injection moulding characterised by the use of fillers	B29C 45/0013

B29C 45/0003

{of successively moulded portions rigidly joined to each other}

Definition statement

This place covers:

Injection moulding processes of continuous or endless articles.

EP847112, fig 7,

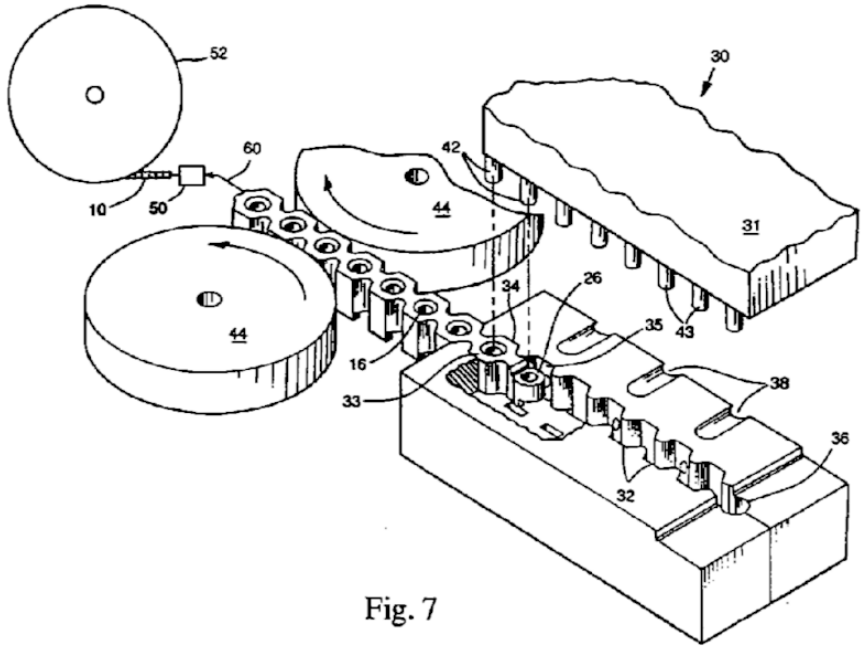

Fig. 7

EP826475 fig 1c.

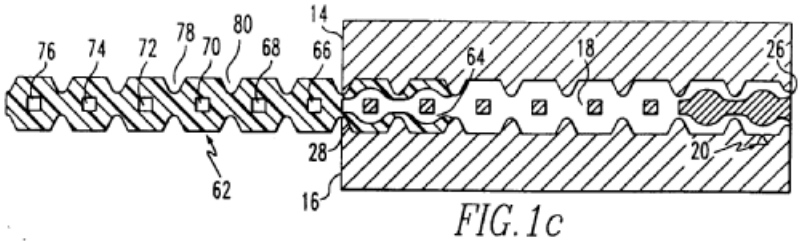

FIG. 1c

Special rules of classification

Although this group covers a combination of several injection steps, the documents are not classified in B29C 45/16

B29C 45/0005

{using fibre reinforcements}

Definition statement

This place covers:

Injection moulding processes, whereby the fibres are dispersed in the plastic material. The dispersion is usually randomly.

Example EP893228

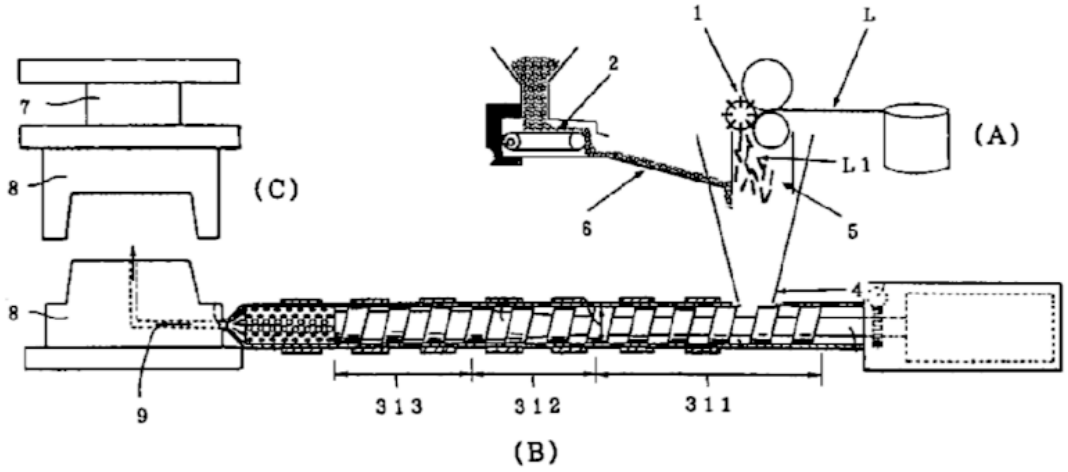

Fig. 1

References

Informative references

Attention is drawn to the following places, which may be of interest for search:

Coating reinforcement	B29C 45/14631
Coating fibrous material or fibre containing material	B29C 45/14786
Resin transfer moulding	B29C 70/48.
Injection moulding with short fibres	(Japanese F-term) 4F206/AB25
Injection moulding with long fibres	(Japanese F-term) 4F206/AD16

B29C 45/0013

{using fillers dispersed in the moulding material, e.g. metal particles}

References

Informative references

Attention is drawn to the following places, which may be of interest for search:

Shaping composites comprising fillers only	B29C 70/58

Glossary of terms

In this place, the following terms or expressions are used with the meaning indicated:

Fillers	relatively inert substances in the form of particles, powder, beads, flakes or spheres, which improve the physical properties or increases the bulk or weight of an article and are randomly dispersed in the material, e.g. additives, dyestuff, colouring material, recycled material

B29C 45/0017

{moulding interconnected elements which are movable with respect to one another, e.g. chains or hinges}

Definition statement

This place covers:

Moulding of movable interconnected elements in a two step moulding process, without applying inserts.

EP159614, fig 5

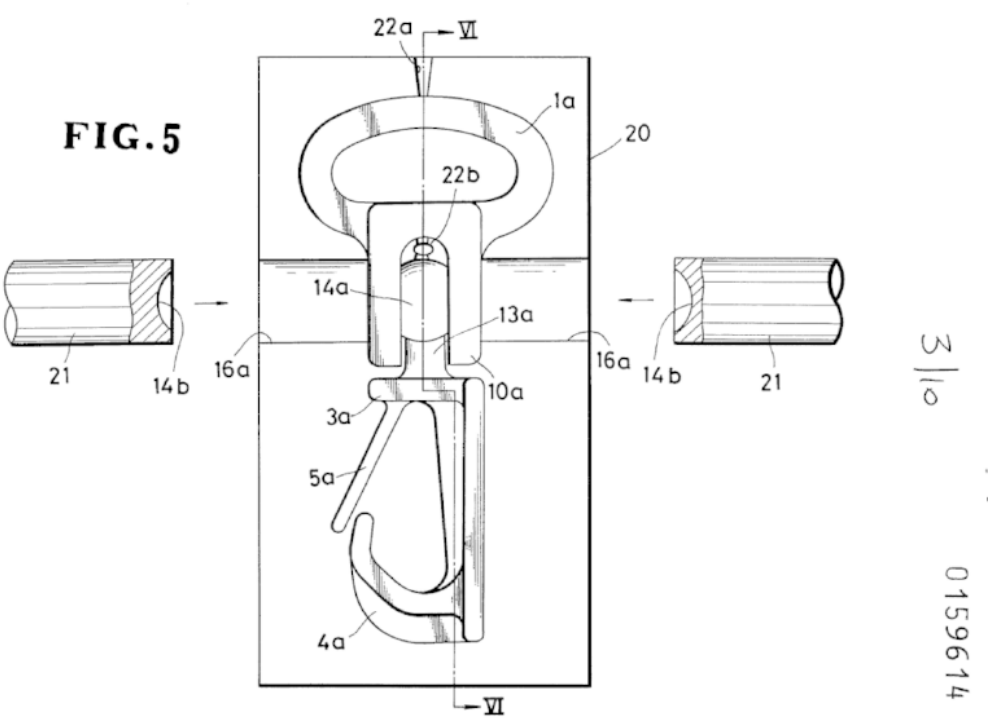

WO0189795, fig 7,8,10

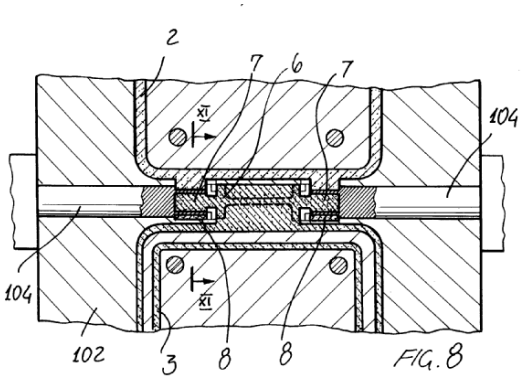

FIG. 8

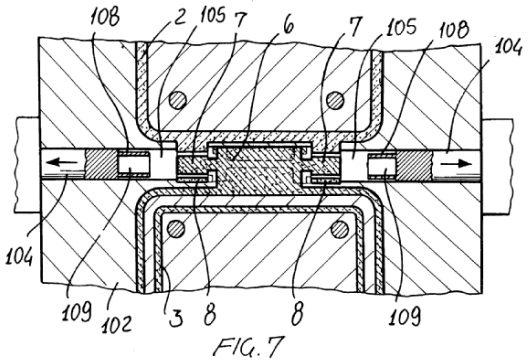

FIG. 7

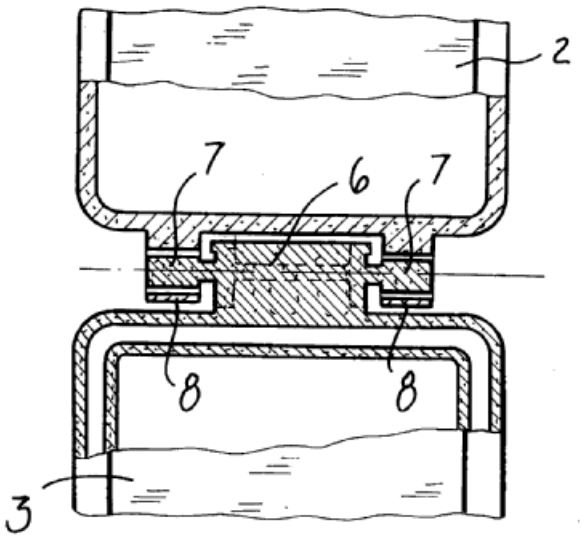

FIG. 10

References

Informative references

Attention is drawn to the following places, which may be of interest for search:

Metal casting of rotational elements:	B22D 19/12
Manufacturing of ventilating devices:	B60H 2001/3492

Special rules of classification

Documents contained in this group are NOT additionally classified in B29C 45/16 and/or B29C 45/26

B29C 45/0025

{Preventing defects on the moulded article, e.g. weld lines, shrinkage marks (preventing defects on the preformed parts or layers B29C 45/14836)}

Definition statement

This place covers:

Moulding processes to avoid the occurrence of burrs, sink marks, warping, location of gate marks or the like on the moulded article

EP508732, fig 8

Figure 8

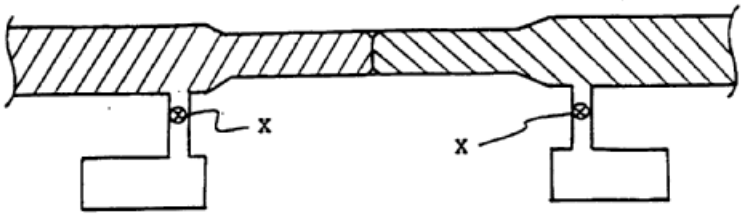

References

Limiting references

This place does not cover:

Applying external gas moulding technology for avoiding shrinkage marks	B29C 45/174

Informative references

Attention is drawn to the following places, which may be of interest for search:

Compensation volume change during moulding	B29C 37/005
Details relating to the flow path during moulding	B29C 45/0046

B29C 2045/0044

{expelling moulding material outside the mould cavity at the weld line location}

References

Informative references

Attention is drawn to the following places, which may be of interest for search:

Moulds with means for removing excess material, e.g. with overflow cavities	B29C 45/2669

B29C 45/0046

{Details relating to the filling pattern or flow paths or flow characteristics of moulding material in the mould cavity}

Definition statement

This place covers:

Moulding processes concerning the filling pattern of flow characteristics. Typically this is related to the moulding of parts having thin and thick sections, e.g. for avoiding weld lines.

EP749821 fig 4

FIG. 4a

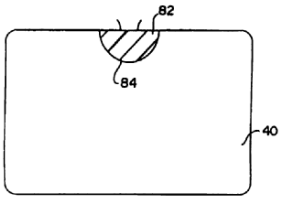

FIG. 4b

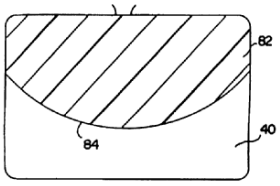

FIG. 4c

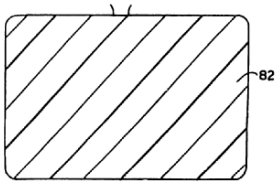

EP666159 fig 1, relates to filling, flow patterns.

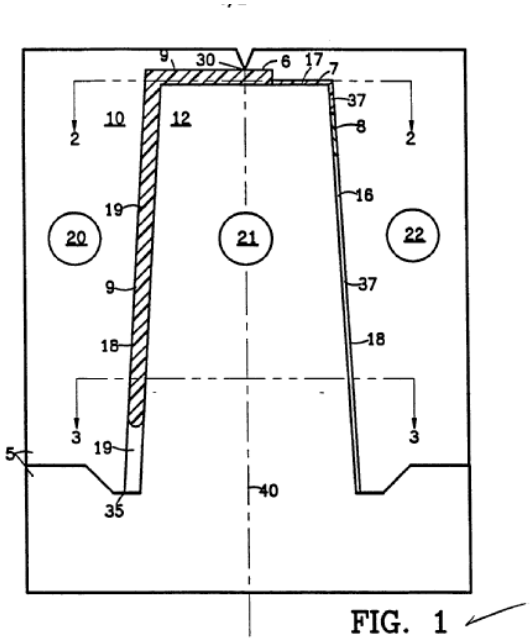

FIG. 1

EP362648, fig 6

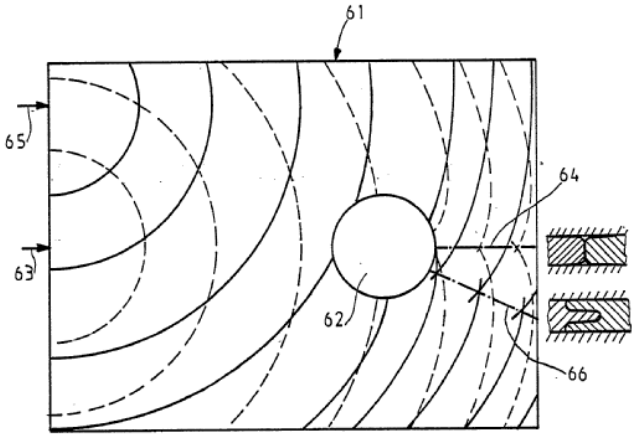

FIG.6

References

Informative references

Attention is drawn to the following places, which may be of interest for search:

Preventing defects on the moulded articles	B29C 45/0025

Special rules of classification

Documents are classified in B29C 45/0046 only, if the inventions concerns only the filling pattern.

Documents are classified in B29C 45/0025 and B29C 45/0046, if the inventions concerns the relation between the filling pattern and the weld line.

B29C 45/0053

{combined with a final operation, e.g. shaping (injection-compression moulding B29C 45/561)}

Definition statement

This place covers:

e.g. irradiation

US20100156007 figure 1,

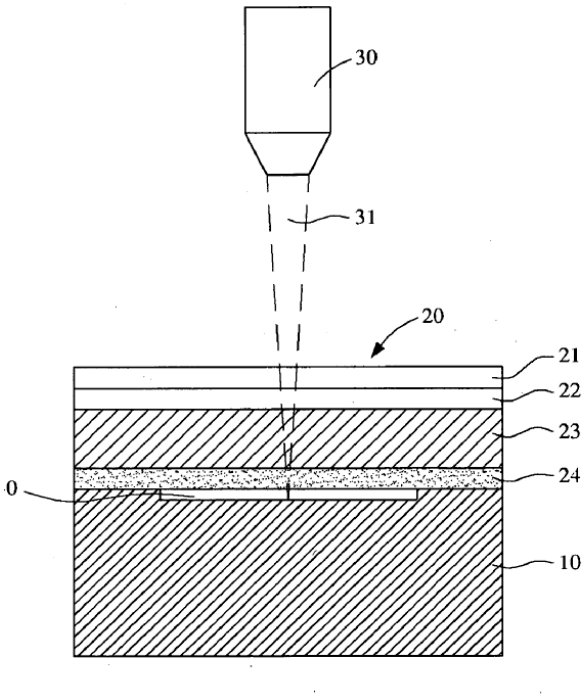

addition of an insert

EP495219, fig 2

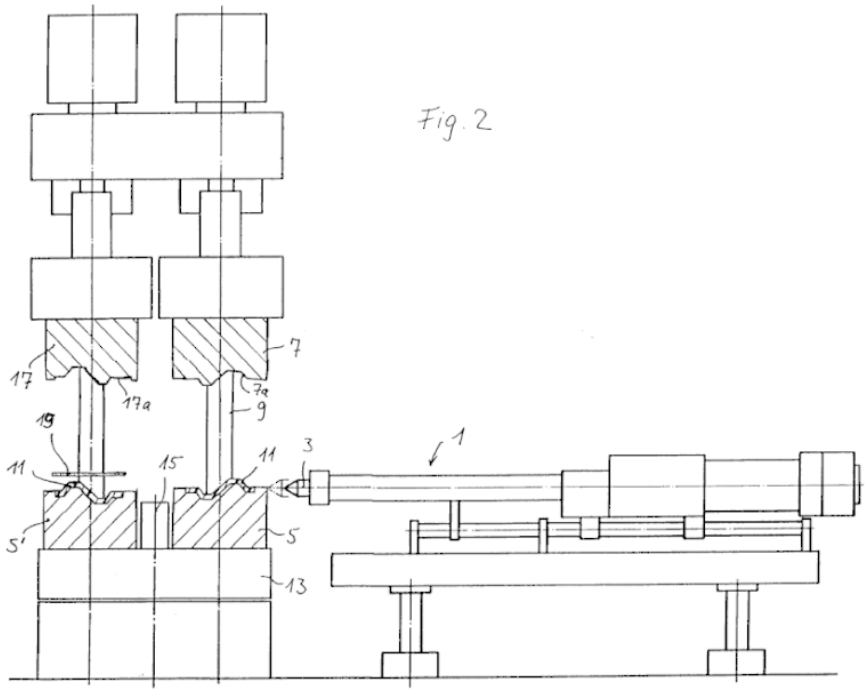

References

Limiting references

This place does not cover:

Post thermal treatment of articles	B29C 45/7207

Informative references

Attention is drawn to the following places, which may be of interest for search:

In-mould coating	B29C 37/0028

B29C 45/0055

{Shaping}

Definition statement

This place covers:

Moulding processes comprising a shaping step after moulding.

Shaping refers to after treatment by mechanical means, e.g. bending, cutting, drilling, punching.

EP546950 shows in fig 1 & fig 2 a bending step.

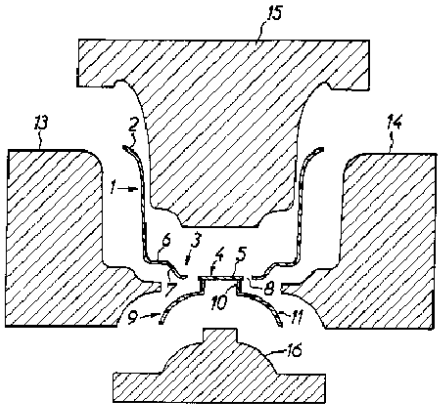

FIG.1

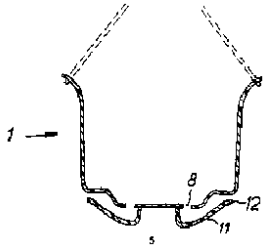

FIG.2

EP381023

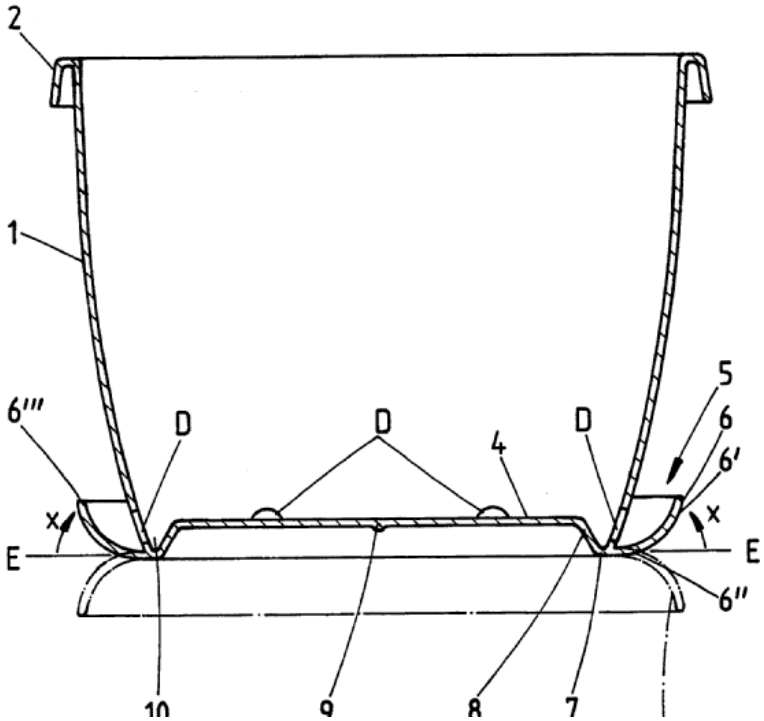

B29C 45/0062

{Joined by injection moulding}

Special rules of classification

Documents classified in this group are not additionally classified in B29C 45/16

B29C 2045/0072

{the parts to be joined being moulded in a stack mould}

References

Informative references

Attention is drawn to the following places, which may be of interest for search:

Moulds having several axially spaced mould cavities	B29C 45/32

B29C 2045/0077

{removing burrs or flashes}

References

Informative references

Attention is drawn to the following places, which may be of interest for search:

Deburring or deflashing in general	B29C 37/02

B29C 45/0081

{of objects with parts connected by a thin section, e.g. hinge, tear line}

Definition statement

This place covers:

Moulding processes, whereby the thin section is part of the moulded material

EP775639, figures 3, 4.

Fig.3

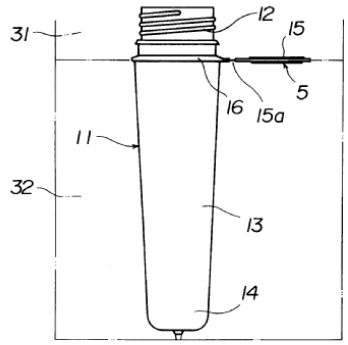

Fig.4

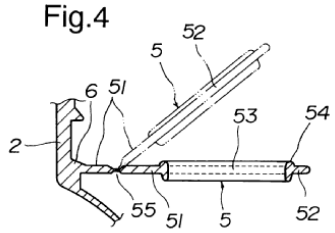

References

Limiting references

This place does not cover:

Using movable wall parts for making orifices in or through the moulded article	B29C 45/5675

Informative references

Attention is drawn to the following places, which may be of interest for search:

Moulding single grooves, ribs, e.g. tear lines in general	B29C 37/0057

B29C 45/0082

{Reciprocating the moulding material inside the mould cavity, e.g. push-pull injection moulding}

Definition statement

This place covers:

Moulding processes whereby the material is 'swung' between several positions in/around the cavity. The material flow is not limited to one direction.

EP188120 figures 2 & 3

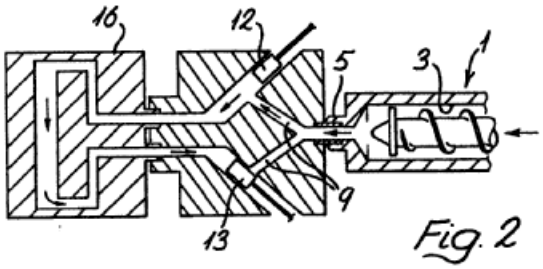

Fig. 2

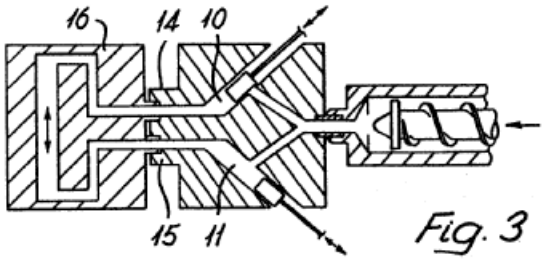

Fig. 3

EP442255 fig 3,4.

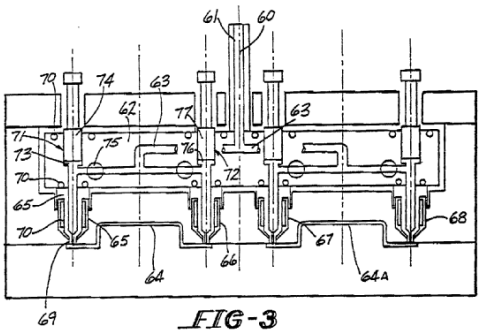

FIG-3

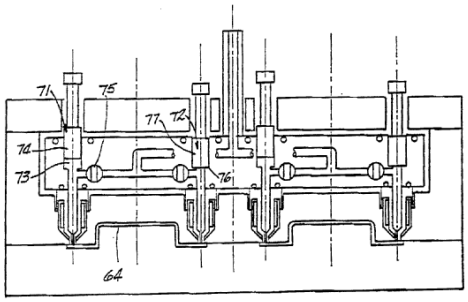

FIG-4

References

Limiting references

This place does not cover:

Applying vibration to mould parts	B29C 45/568

B29C 45/0084

{General arrangement or lay-out of plants (B29C 45/1468 takes precedence)}

Definition statement

This place covers:

Plants showing several working positions or operations, e.g. EP576196

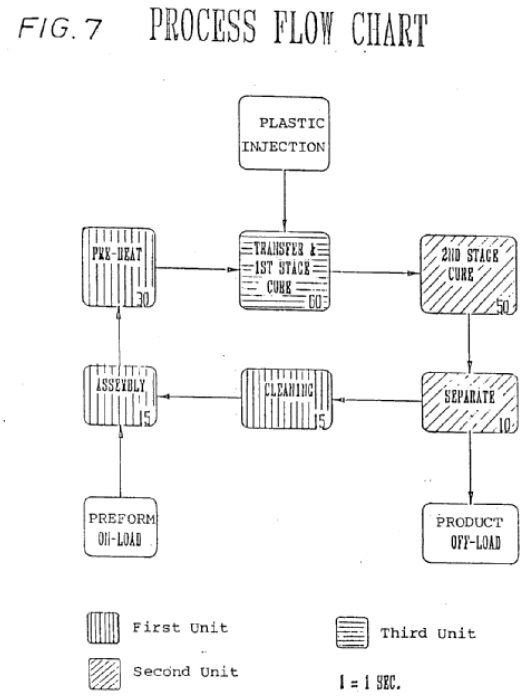

Lay out of plants, e.g.

EP765726

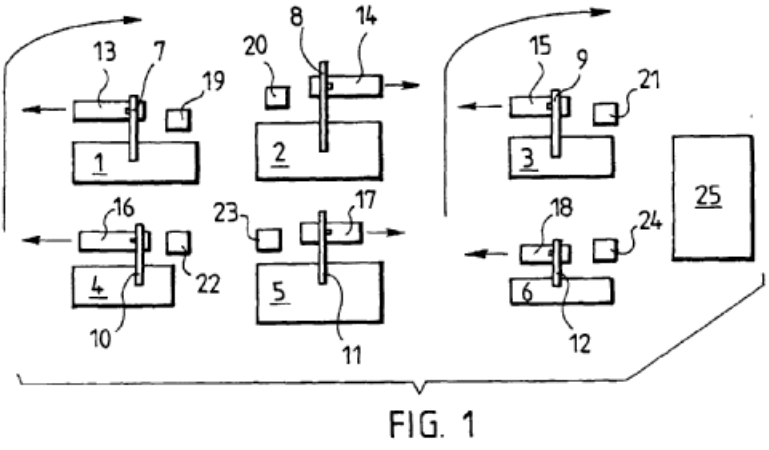

FIG. 1

DE19634843, fig 4.

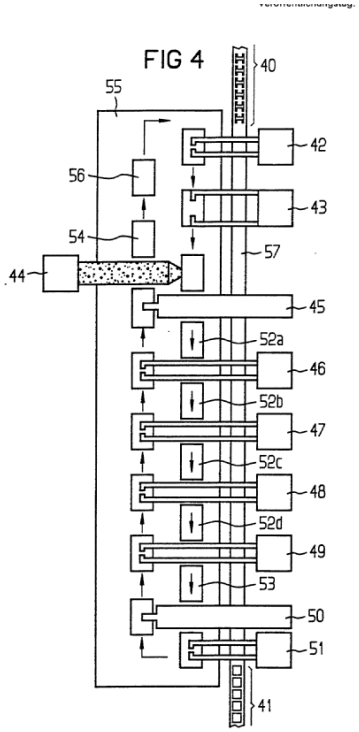

References

Limiting references

This place does not cover:

Plants for encapsulating articles mounted on a carrier, e.g. lead frame	B29C 45/1468

B29C 45/02

Transfer moulding, i.e. transferring the required volume of moulding material by a plunger from a "shot" cavity into a mould cavity

Definition statement

This place covers:

Transfer moulding, whereby a shot cavity is provided within the mould. The material is transferred from the shot cavity into the mould cavity/cavities. The plunger is also part of the mould, the transfer takes place within a closed mould.

EP646948, fig 3.

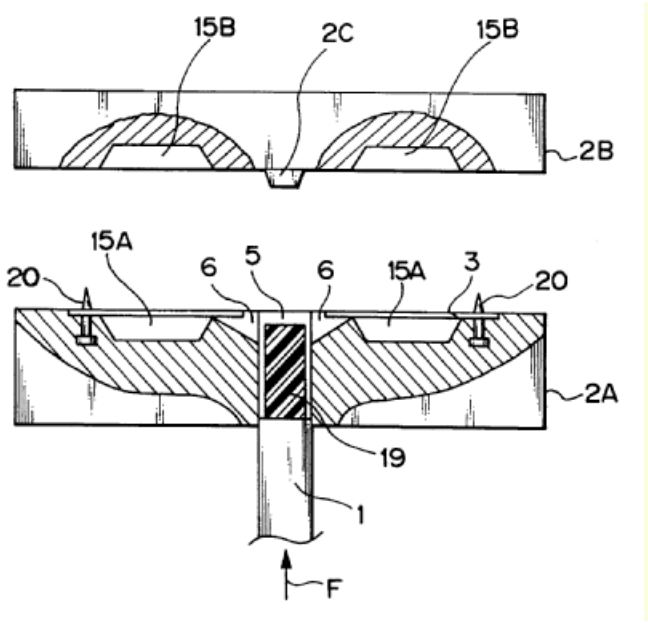

Relationships with other classification places

The difference between transfer moulding and compression moulding, is that in case of the latter, the material is compressed while closing the mould and not by separate mould parts after closing.

A typical example of compression moulding

EP510414, fig 3 & 4

Fig. 3

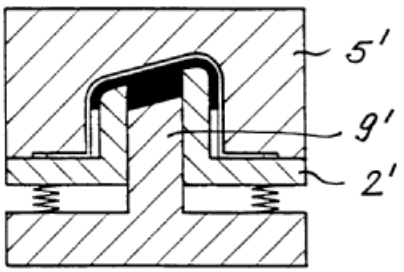

Fig. 4

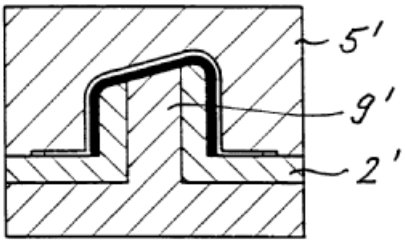

References

Limiting references

This place does not cover:

Resin transfer moulding	B29C 70/48

Informative references

Attention is drawn to the following places, which may be of interest for search:

Compression moulding with pressing members independently movable of the parts for opening and closing the mould	B29C 43/361

B29C 45/021

{Plunger drives; Pressure equalizing means for a plurality of transfer plungers}

Definition statement

This place covers:

Drives or pressure equalizing means.

JP5329870, hydraulic chamber 9.

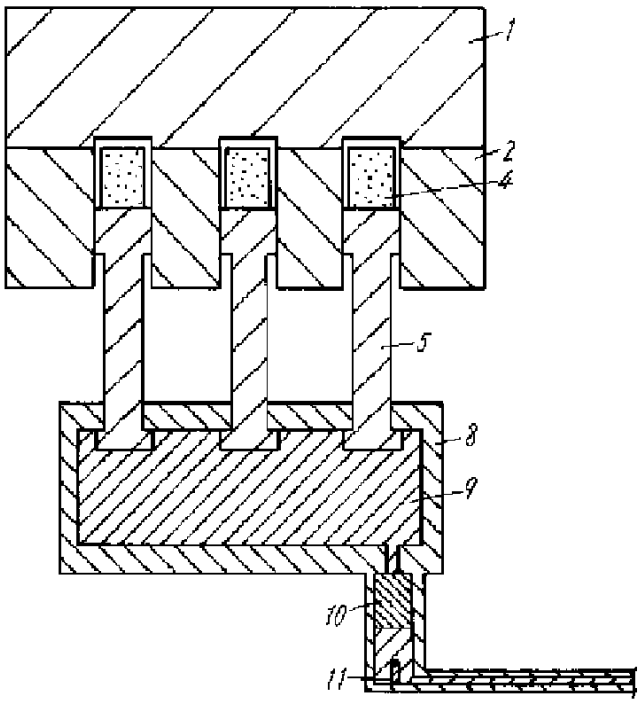

EP0778116

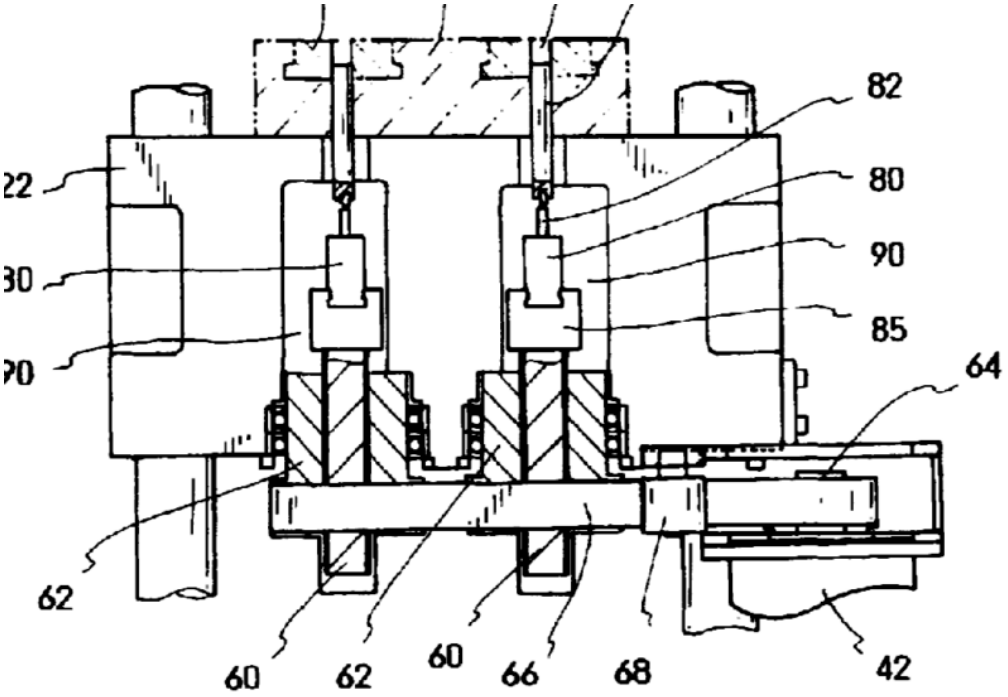

B29C 45/03

Injection moulding apparatus (transfer moulding B29C 45/02)

Definition statement

This place covers:

The configuration of the injection moulding apparatus

EP34203, fig 3.

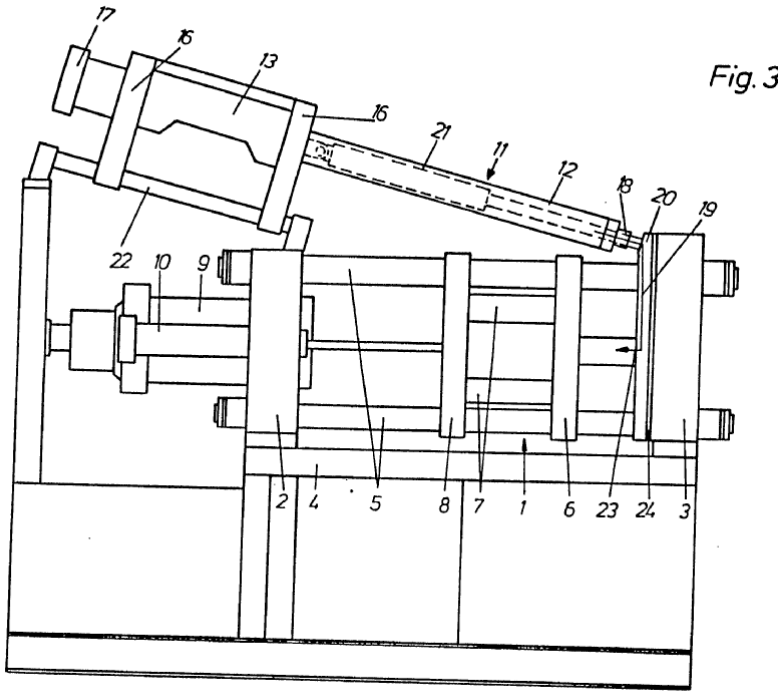

References

Limiting references

This place does not cover:

Injection apparatuses combining the feeding means with opening, closing or clamping means	B29C 45/70

B29C 45/036

{Injection pistols}

Definition statement

This place covers:

Mainly hand-held injection moulding machines

US2995159

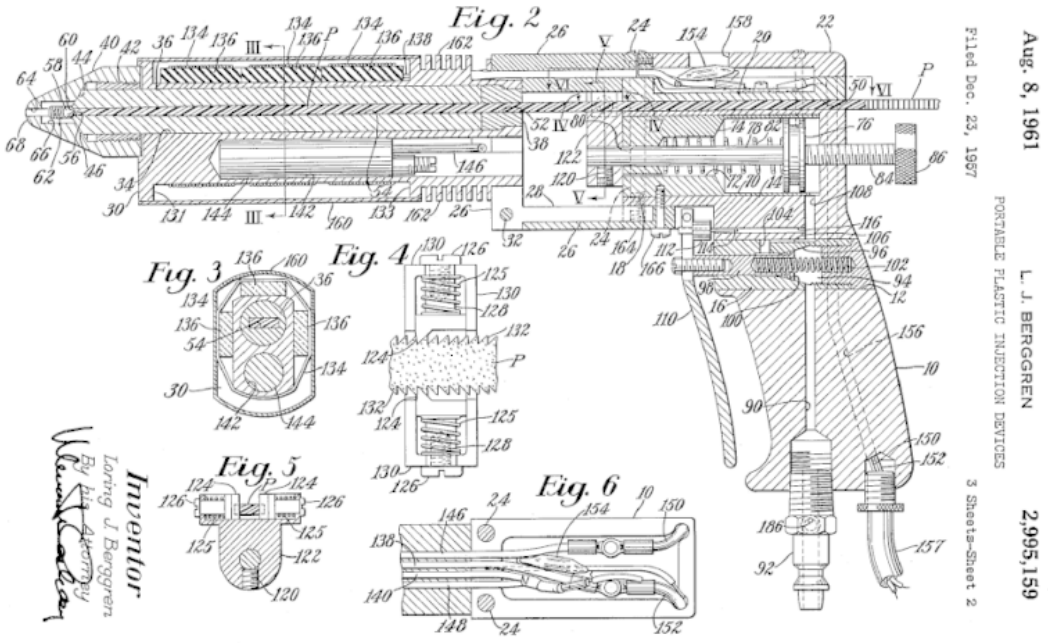

References

Informative references

Attention is drawn to the following places, which may be of interest for search:

Spray-up equipment for coating a mould, a core or other equipment:	B29C 41/365
Hand tools for applying fluid in general	B05C 17/00

B29C 45/04

using movable moulds {or mould halves} (B29C 45/08 takes precedence)

Definition statement

This place covers:

EP0268174

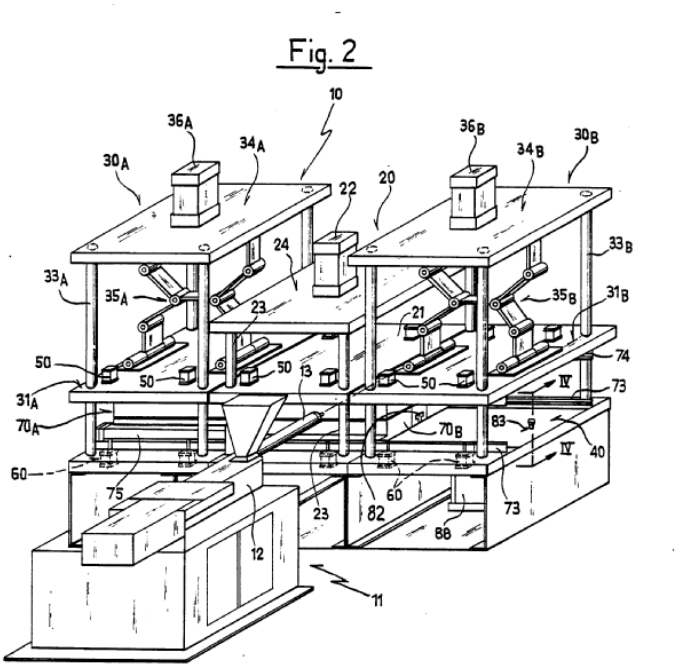

References

Limiting references

This place does not cover:

Movable moulds for making multilayered or multicoloured articles	B29C 45/1615

B29C 45/0408

{involving at least a linear movement (B29C 45/0433 takes precedence)}

Definition statement

This place covers:

US20060172039

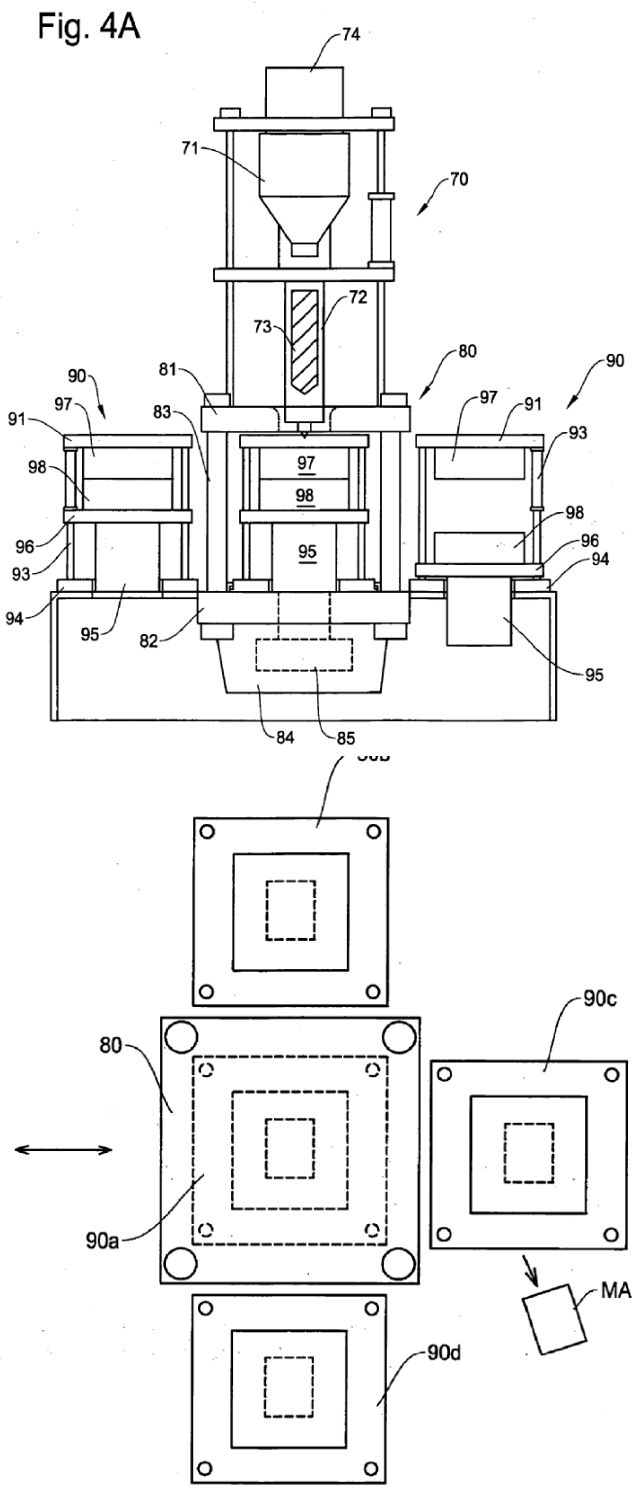

B29C 45/0416

{co-operating with fixed mould halves}

Definition statement

This place covers:

DE29517714U

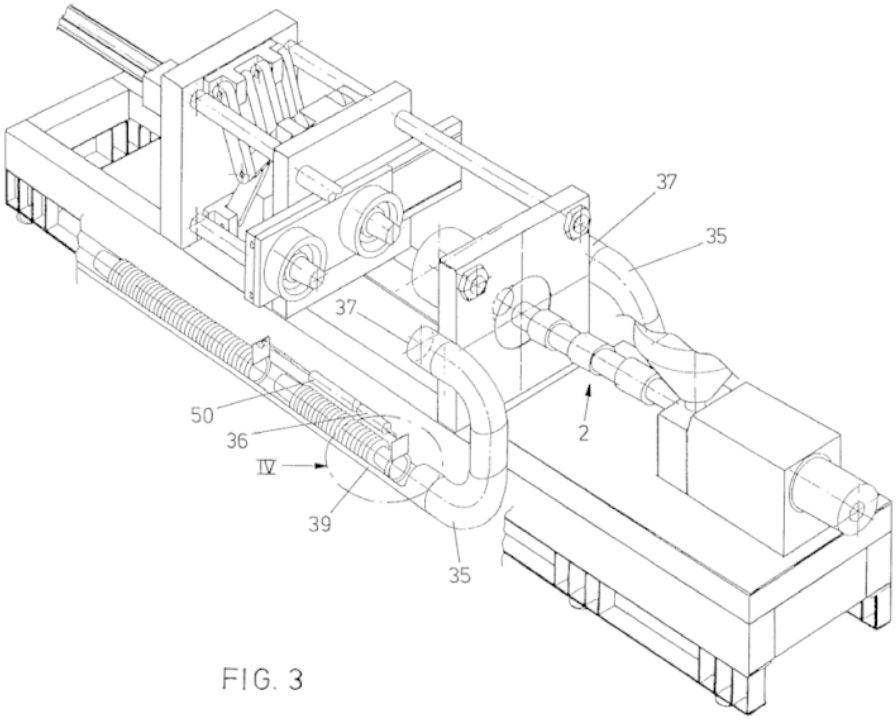

FIG. 3

B29C 45/0433

{mounted on a conveyor belt or chain}

Definition statement

This place covers:

EP0577169

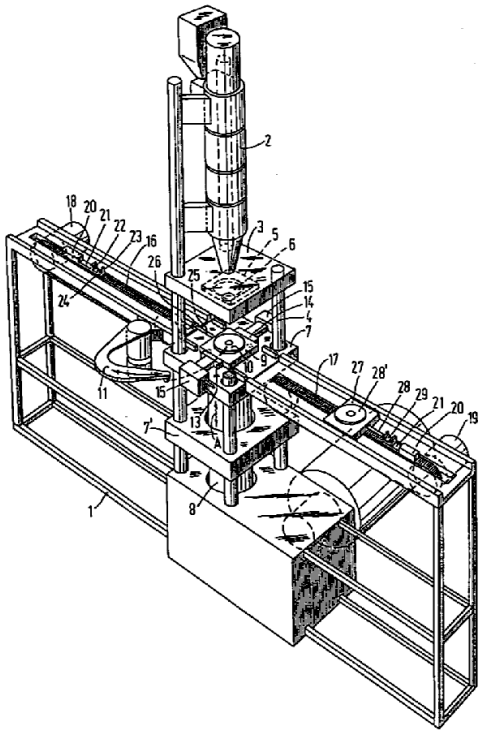

B29C 45/0441

{involving a rotational movement (B29C 45/06 takes precedence)}

Definition statement

This place covers:

DE10120267

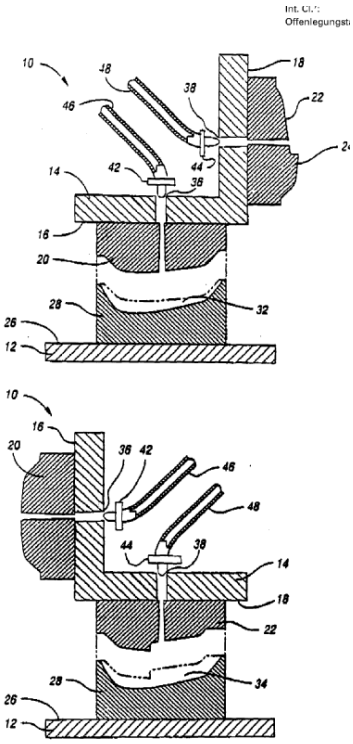

EP351895, fig 9/10.

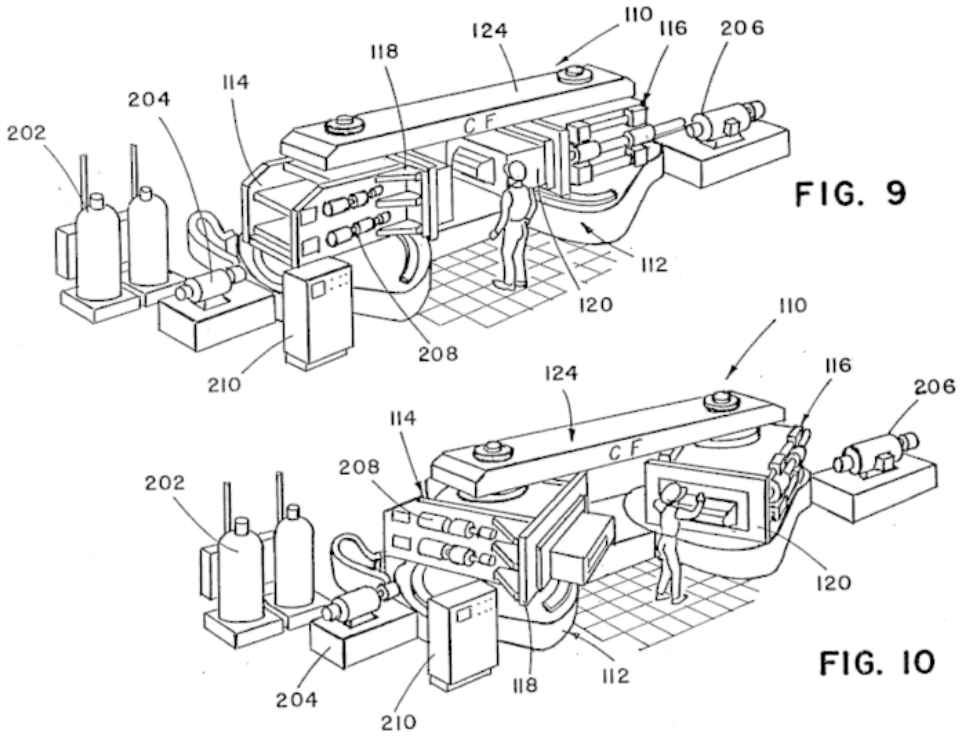

References

Limiting references

This place does not cover:

Rotatable moulds or mould halves mounted on a turntable	B29C 45/06

B29C 45/045

{mounted on the circumference of a rotating support having a rotating axis perpendicular to the mould opening, closing or clamping direction}

Definition statement

This place covers:

EP42012

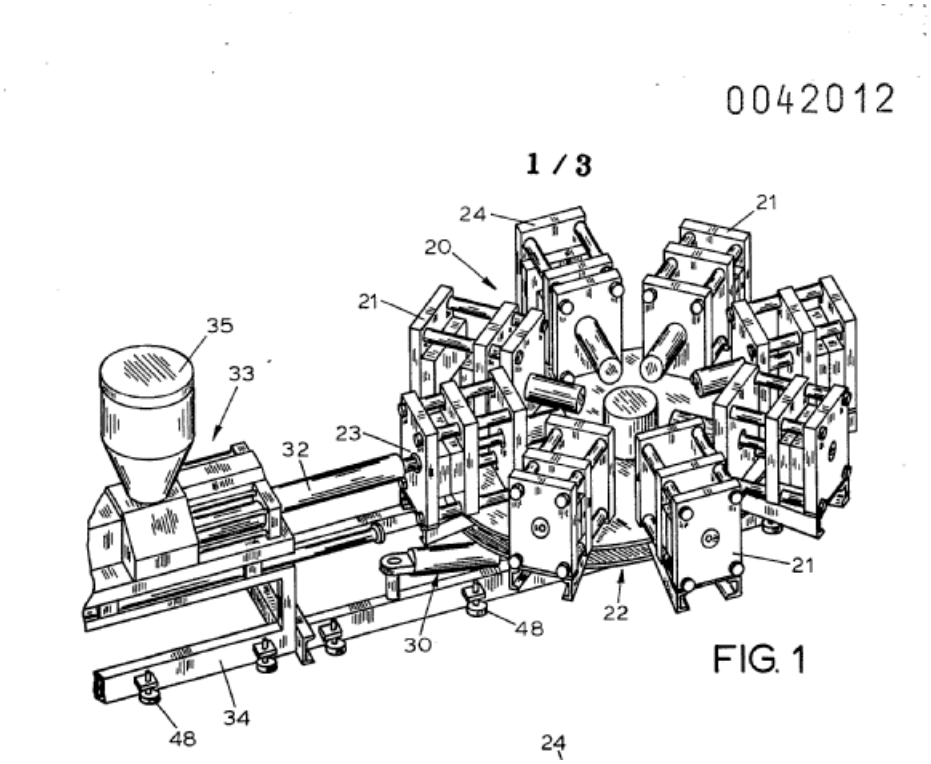

Synonyms and Keywords

In patent documents, the following words/expressions are often used with the meaning indicated:

"circumference"	"surface "

B29C 45/06

{mounted} on a turntable {, i.e. on a rotating support having a rotating axis parallel to the mould opening, closing or clamping direction}

Definition statement

This place covers:

Injection moulding machines comprising a turntable, being a horizontal moving table with complete moulds or mould halves (the mould halves are covered by B29C 45/062). The rotation axis is normally parallel to the open/closing axis of the moulds.

WO9739870

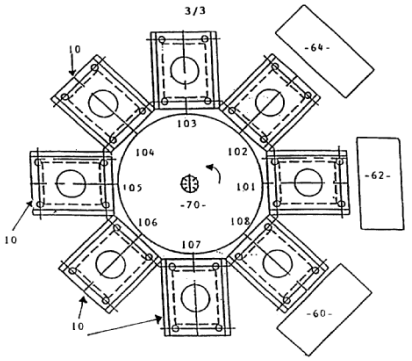

FIG. 3

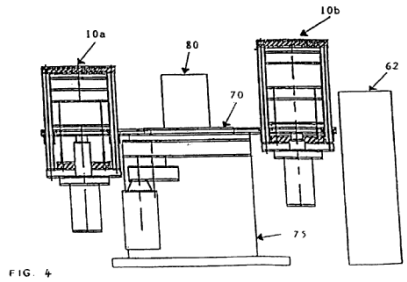

FIG. 4

EP0529940

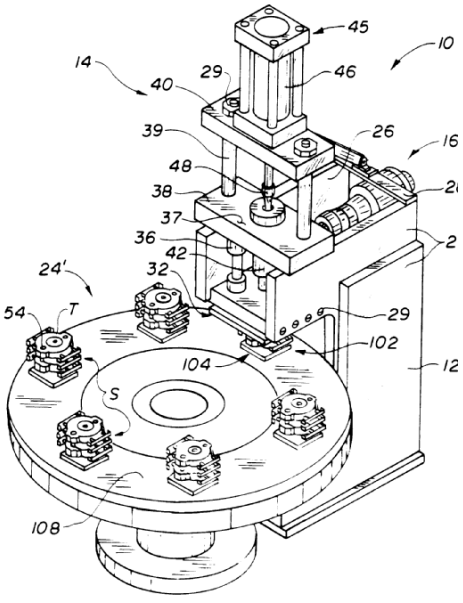

FIG. 7

References

Informative references

Attention is drawn to the following places, which may be of interest for search:

Turntables for presses	B30B 15/0023

B29C 45/062

{carrying mould halves co-operating with fixed mould halves}

Definition statement

This place covers:

EP300068 fig 1

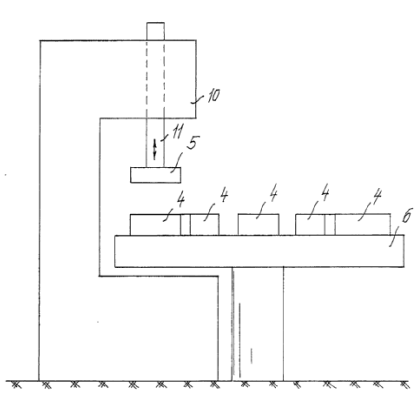

Fig.1

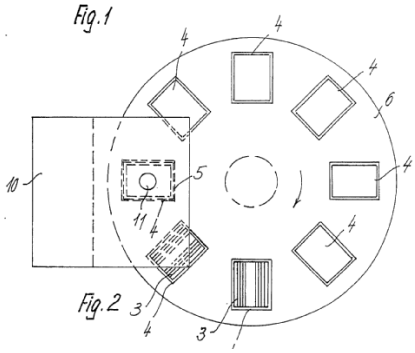

Fig.2

US20060177539

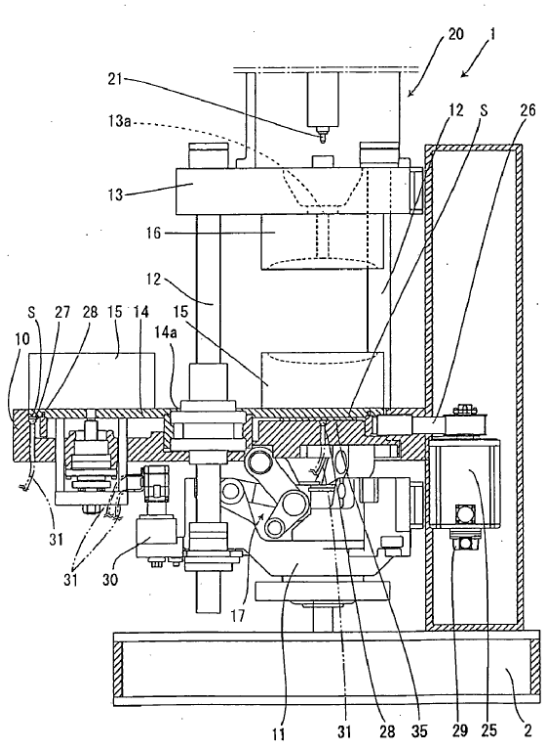

B29C 45/07

using movable injection units

Definition statement

This place covers:

Injection moulding processes, whereby EACH moulding cycle, the injection unit is MOVED and removed.

US3924994, fig 1& 2.

Fig.1

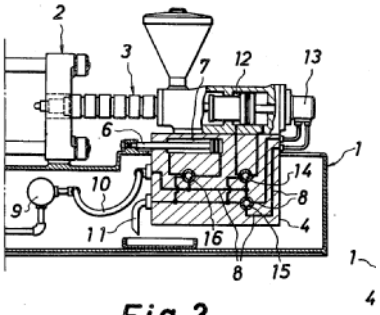

Fig.2

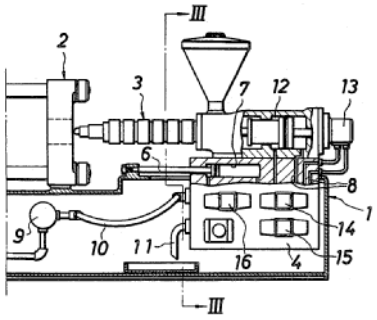

B29C 45/076

{cooperating with two or more moulds}

Definition statement

This place covers:

EP438721 fig 1,2 position A & B

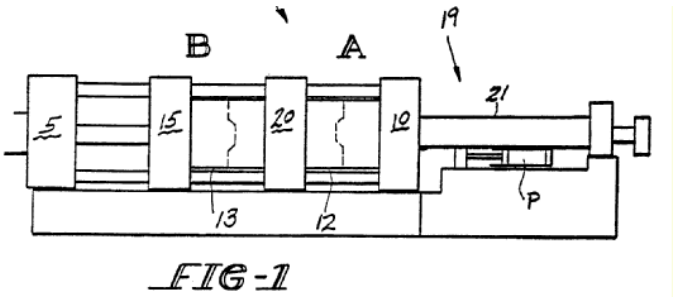

FIG-1

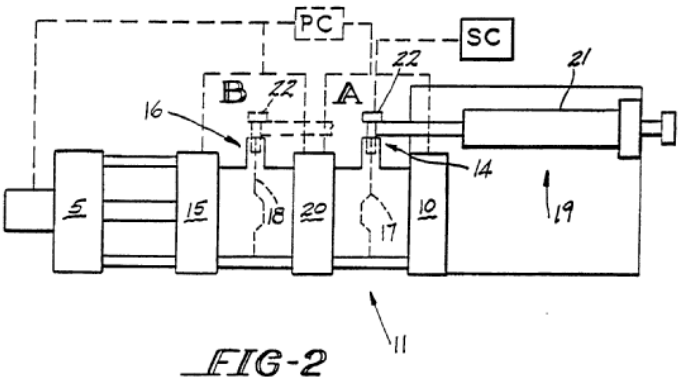

FIG-2

B29C 45/08

moving with the mould during the injection operation

Definition statement

This place covers:

Injection moulding processes, whereby the injection unit and the mould move at the same time.
FR2155808 dashed line 5

FIG.1

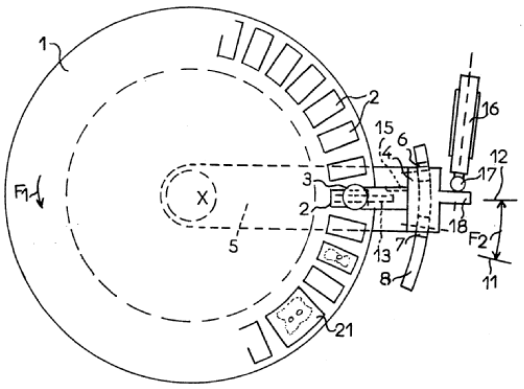

FIG.2

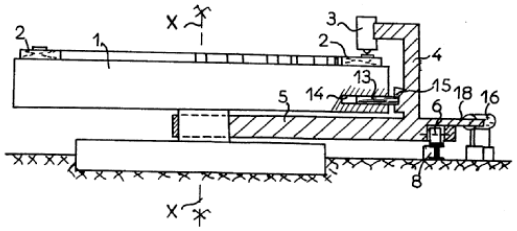

B29C 45/10

using moulds or injection units usable in different arrangements or combinations to each other

Definition statement

This place covers:

Different arrangements or combinations concerning the mould AND the injection unit.

Different arrangement of the mould and injection unit DE2543448, fig 1 & 2

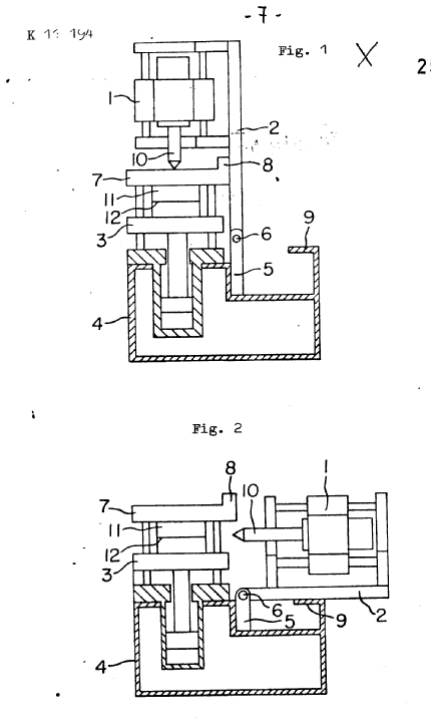

Different combination of the mould and injection unit EP138169, fig 1 & 2

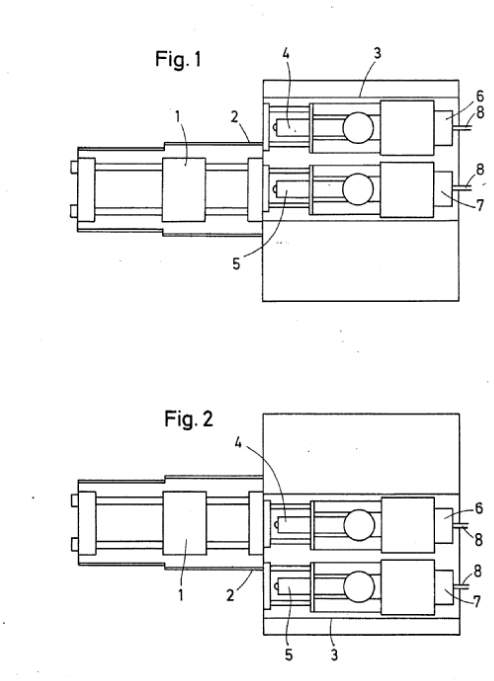

Note that the different arrangement or combination are not related to one moulding cycle but to a long period of use.

References

Limiting references

This place does not cover:

Moulds in different combinations	B29C 45/2673

B29C 45/12

using two or more fixed moulds, e.g. in tandem {(B29C 45/076 takes precedence)}

Definition statement

This place covers:

The INJECTION UNIT cooperates with BOTH MOULDS through a runner channel.

EP326175, figure 16

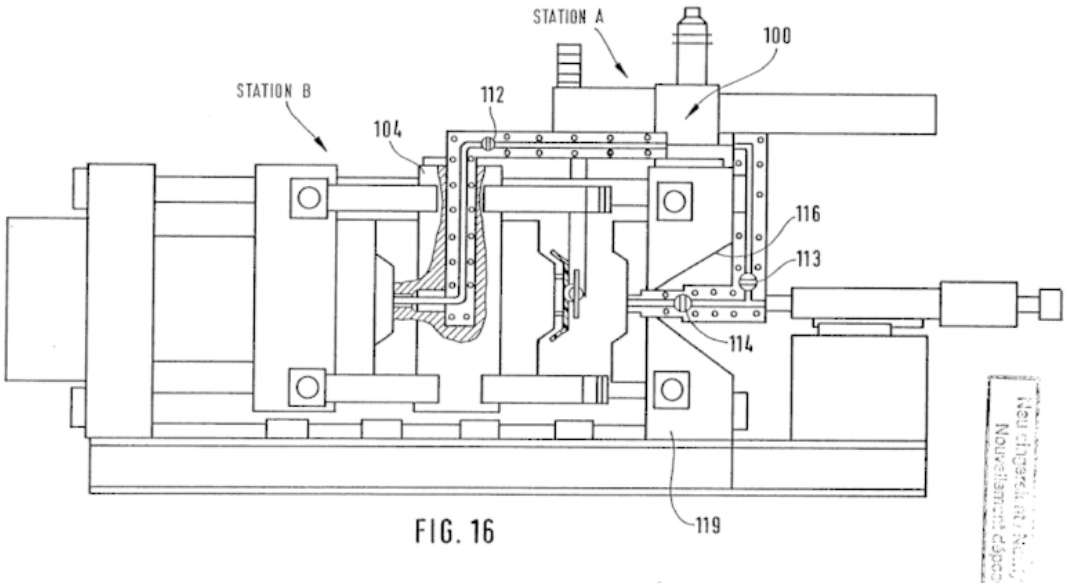

FIG. 16

References

Informative references

Attention is drawn to the following places, which may be of interest for search:

Stack moulds	B29C 45/32

B29C 45/125

{using a material distributing system}

Definition statement

This place covers:

EP265603 fig 1

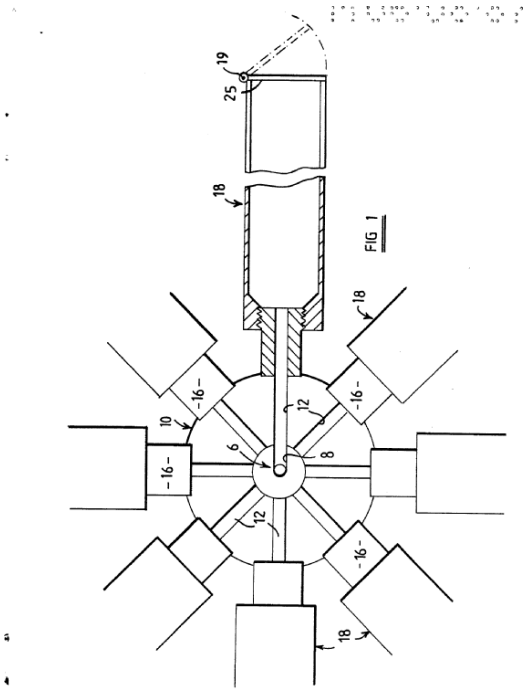

EP13118 fig 2,

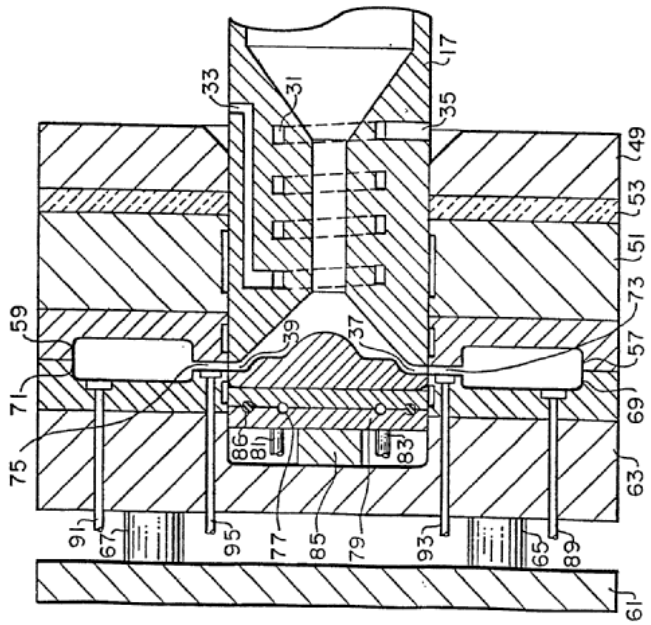

FIG. 2

WO9702126 fig 2.

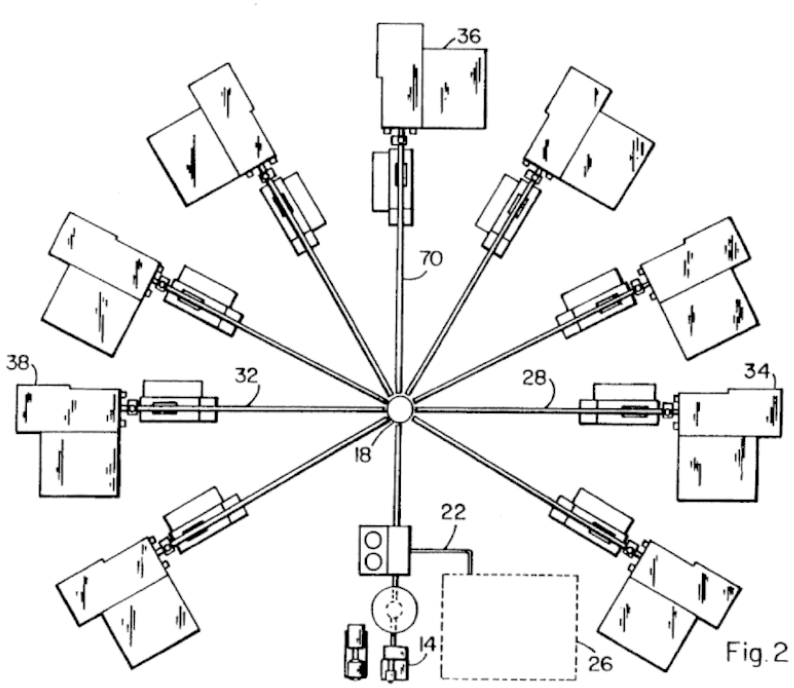

Fig.2

B29C 45/13

using two or more injection units co-operating with a single mould

Definition statement

This place covers:

Several injection units, typically for quickly filling one mould.

FR2381616, figure 1

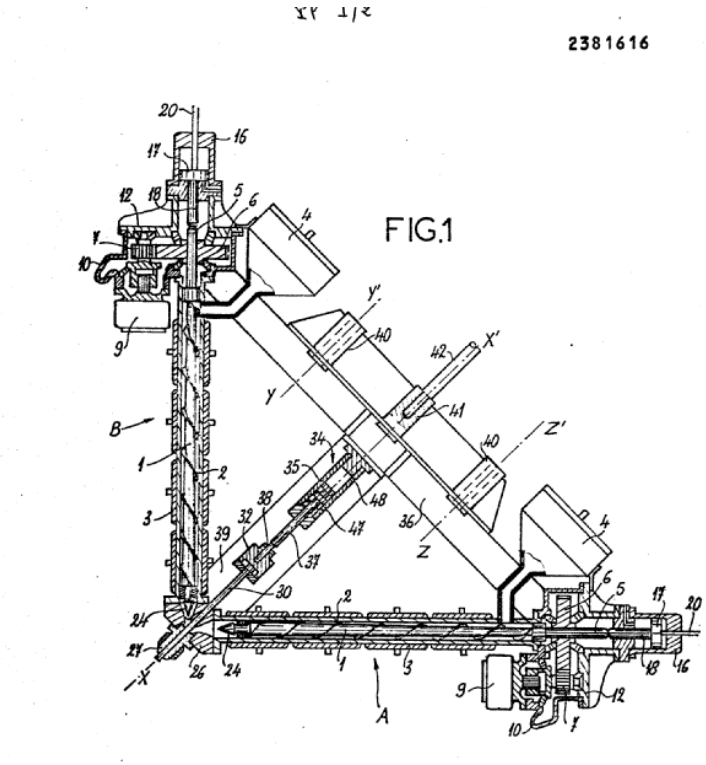

US2293304, figure 1

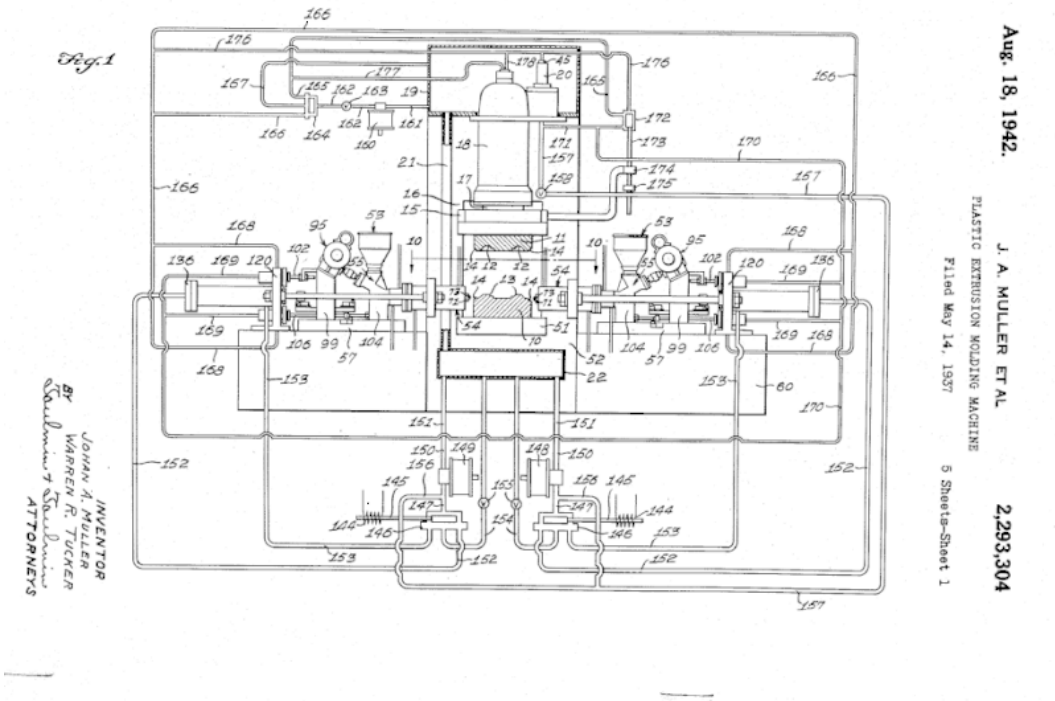

References

Informative references

Attention is drawn to the following places, which may be of interest for search:

Multi-component injection moulding	B29C 45/16

B29C 45/14

incorporating preformed parts or layers, e.g. injection moulding around inserts or for coating articles {(B29C 45/1671 takes precedence)}

Definition statement

This place covers:

EP492052 fig 1 & 2, label A.

FIG. 1

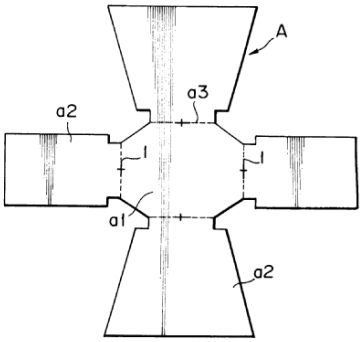

FIG. 2

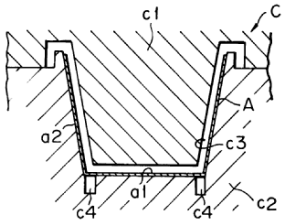

Synonyms and Keywords

In patent documents, the following words/expressions are often used as synonyms:

- "inserts","preformed parts", "articles", "films" and "preformed layers"

B29C 45/14008

{Inserting articles into the mould (B29C 45/14827 takes precedence)}

Definition statement

This place covers:

Usually robots for inserting the to be overmoulded articles into the mould cavity

EP373023, figure 1

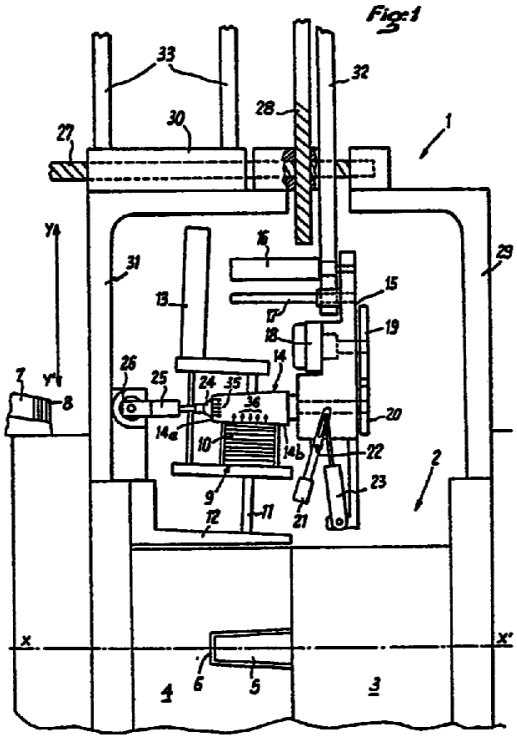

Relationships with other classification places

Attention is being paid to the difference between B29C 45/14008 and B29C 45/14065, B29C 45/14008 concerns the inserting of the articles INTO the mould. B29C 45/14065 concerns the positioning of the already inserted article WITHIN the mould (cavity).

References

Informative references

Attention is drawn to the following places, which may be of interest for search:

Handling of preformed parts in general	B29C 31/008
Inserting labels or films into blow moulds	B29C 49/2408
Feeding of linings or labels for thermoforming	B29C 51/165
Locating or holding inserts in metal casting	B22D 17/24
Orienting articles in an article feeder for assembling machines	B23P 19/002

B29C 45/14016

{Intermittently feeding endless articles, e.g. transfer films, to the mould (B29C 45/14262 takes precedence)}

Definition statement

This place covers:

Non-continuous feeding of a film

EP101095, fig 2

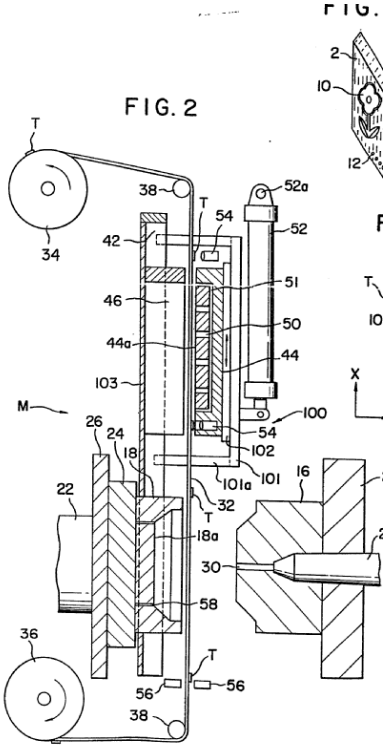

B29C 45/14024

{and punching or cutting a portion from the endless articles during mould closing}

Definition statement

This place covers:

EP231670, punch mechanism 3

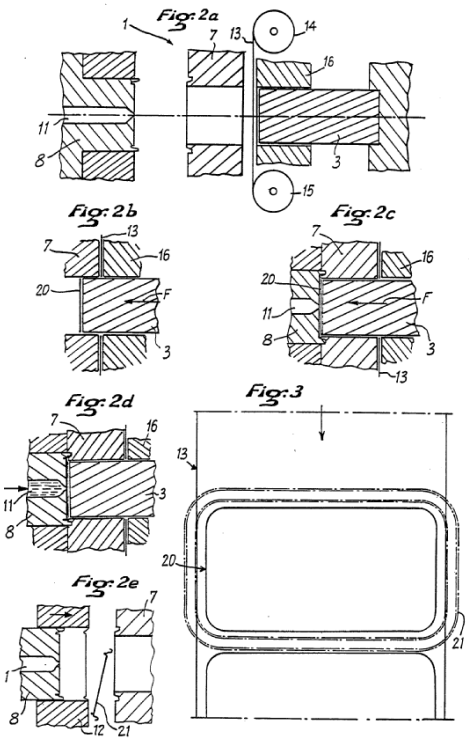

B29C 45/14032

{Transferring the inserts from a storage space inside the mould to the mould cavity}

Definition statement

This place covers:

EP37032 fig 3 & 4.

FIG. 3

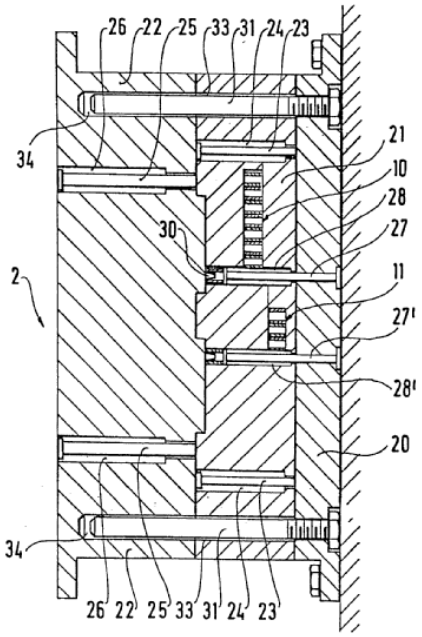

FIG. 4

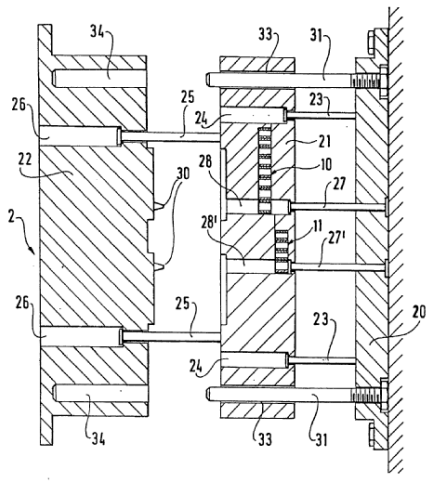

Inserts are introduced in storage space 10 inside the mould and when the mould is closed, one insert is transferred each moulding cycle by transfer means 27.

B29C 45/14065

{Positioning or centering articles in the mould}

Definition statement

This place covers:

EP257681 pin 110 in fig 11(means are here part of the insert)

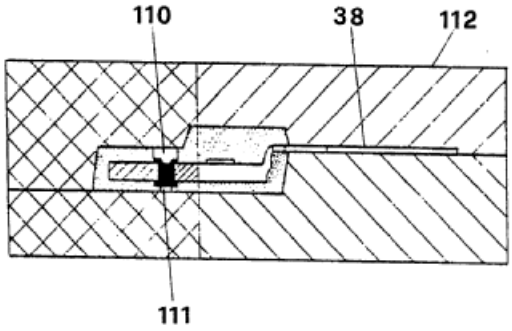

FIG. 11

Relationships with other classification places

Where B29C 45/14008 concerns the inserting of the insert INTO the mould, B29C 45/14065 concerns the positioning or centering in the cavity of the already inserted insert.

References

Informative references

Attention is drawn to the following places, which may be of interest for search:

Moulds with incorporated means for centering inserts in general	B29C 33/12
Moulds using magnetic means for positioning inserts in general	B29C 33/16
Moulds using vacuum to position inserts in general	B29C 33/18

B29C 45/14073

{using means being retractable during injection}

Definition statement

This place covers:

EP257681, retracting pins

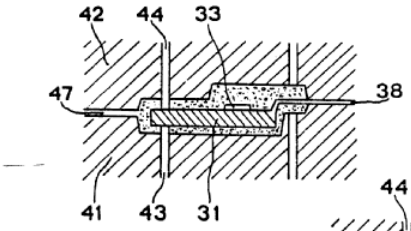

FIG. 6A

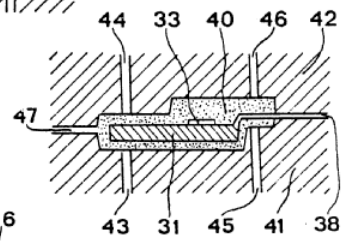

FIG. 6B

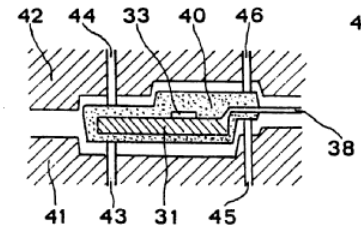

FIG. 6C

B29C 45/1418

{the inserts being deformed or preformed, e.g. by the injection pressure}

Definition statement

This place covers:

EP782908 insert S

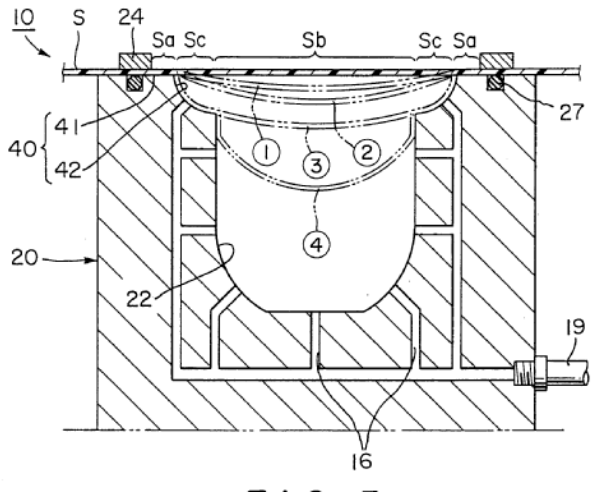

References

Informative references

Attention is drawn to the following places, which may be of interest for search:

Shaping linings by compression of the moulding material	B29C 43/184

B29C 45/14196

{the inserts being positioned around an edge of the injected part}

Definition statement

This place covers:

Moulding of edge wrapped articles

References

Informative references

Attention is drawn to the following places, which may be of interest for search:

Lining or sheeting by folding, winding, bending or the like	B29C 63/04

B29C 45/14221

{by tools, e.g. cutting means}

Definition statement

This place covers:

Deformation by mechanical means

EP721831, fig 1-3,

Fig. 1

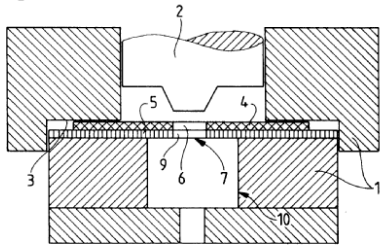

Fig. 2

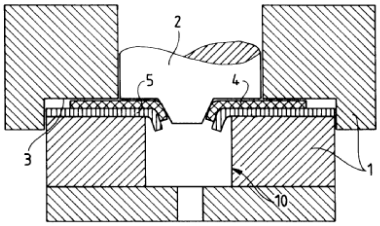

Fig. 3

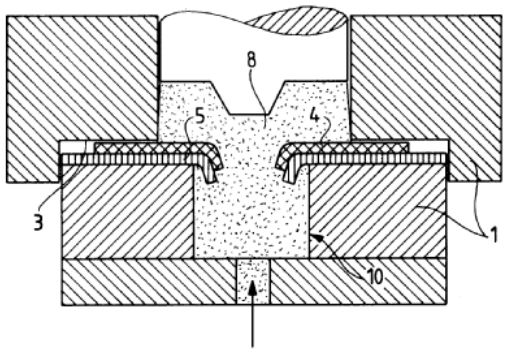

EP592768, fig 1,

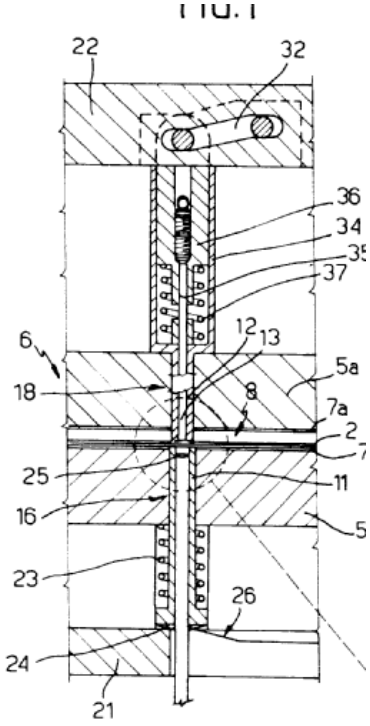

P517614, parts 11a, fig 1

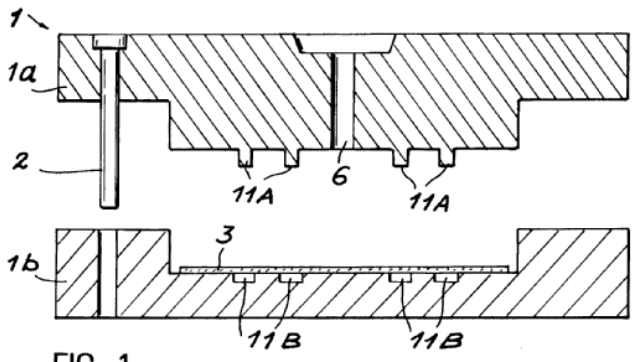

FIG. 1

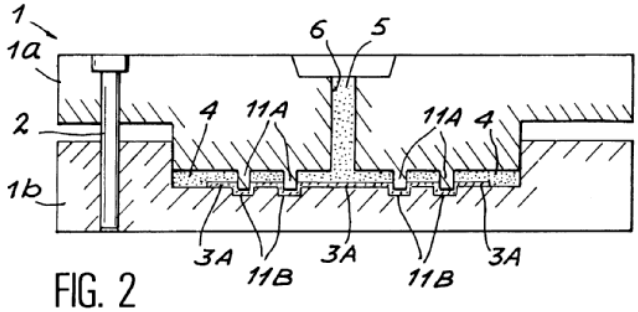

FIG. 2

References

Limiting references

This place does not cover:

Deformation by injection pressure	B29C 45/1418, B29C 45/14196

B29C 45/14311

{using means for bonding the coating to the articles (B29C 45/14795 takes precedence)}

Definition statement

This place covers:

Bonding means, e.g. adhesives, chemical means, locking configurations

EP976519, perforation in fig 2.

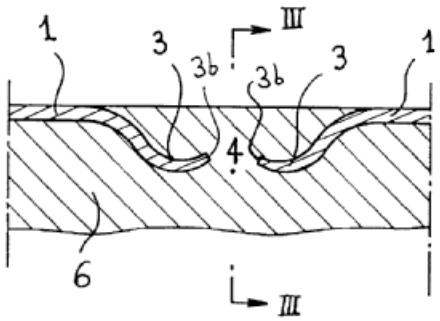

References

Informative references

Attention is drawn to the following places, which may be of interest for search:

Measures or configurations for obtaining an anchoring effect in contacting areas general	B29C 37/0078

B29C 45/14336

{Coating a portion of the article, e.g. the edge of the article (B29C 45/14573 and B29C 45/14598 take precedence)}

Definition statement

This place covers:

Moulding processes, whereby a part of the insert is outside the cavity during the moulding process.
EP1013392 fig 7, insert 4, coating 6 & 8

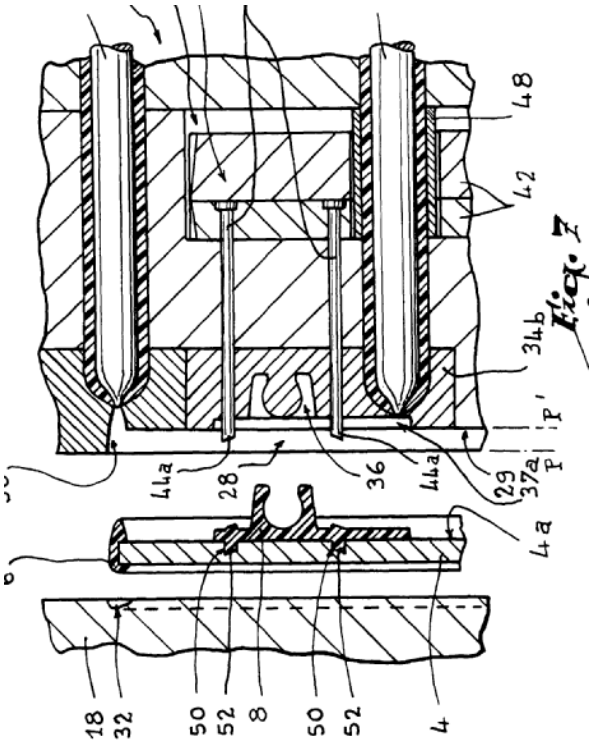

EP727289, only handle of the insert

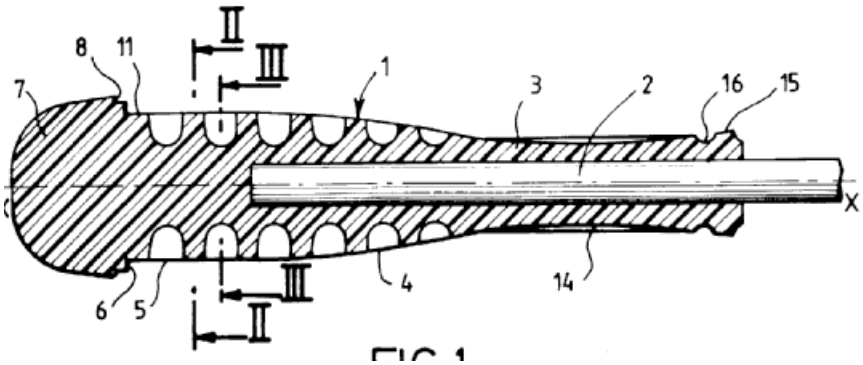

References

Limiting references

This place does not cover:

Coating the edge of articles at spaced locations	B29C 45/14573

Coating a portion of tubular articles	B29C 45/14598

B29C 45/14344

{Moulding in or through a hole in the article, e.g. outsert moulding}

Definition statement

This place covers:

outsert moulding: EP65220, insert 8 is, at least partially OUTSIDE the moulding material 14

FIG. 5

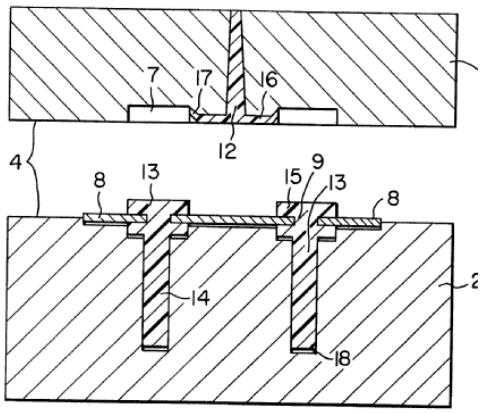

FIG. 6

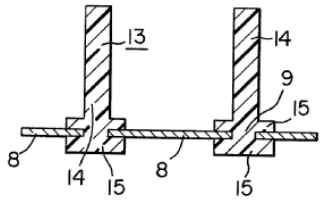

References

Informative references

Attention is drawn to the following places, which may be of interest for search:

Permeable inserts	B29C 45/14795
Moulding in general on a relative small portion of the preformed part e.g. outsert moulding	B29C 70/74

B29C 45/14377

{using an additional insert, e.g. a fastening element}

Definition statement

This place covers:

The use of an additional fastening element in combination with partial coating of an insert only (note: B29C 45/14467 takes precedence)

EP468713, fig 2 insert 2 and additional fastening means 12

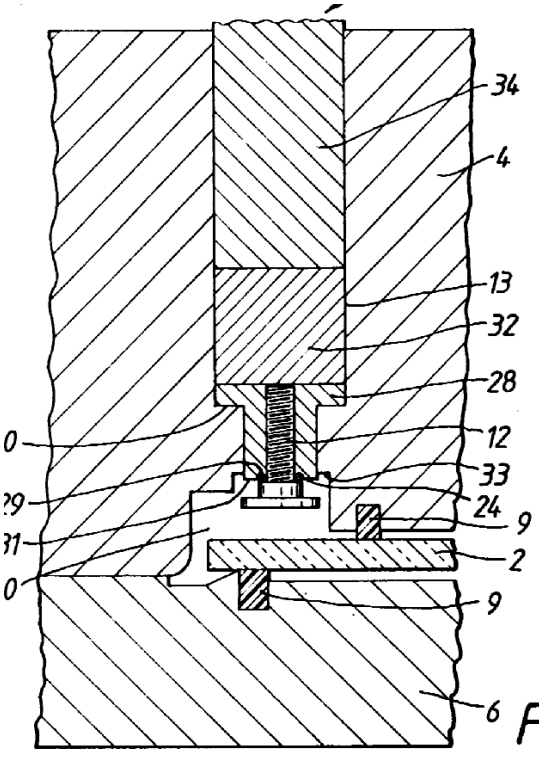

Fig.2.

EP436438 with additional fastening means 22 & 27 (fig 2 & 3).

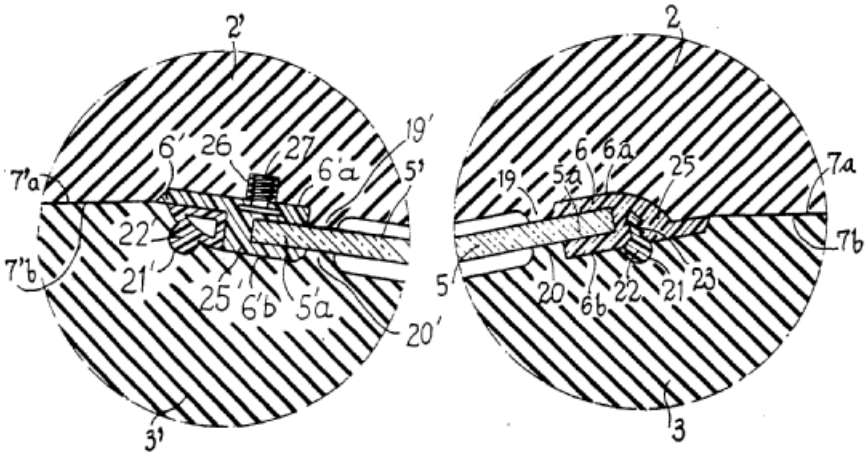

FIG.3 FIG.2

References

Informative references

Attention is drawn to the following places, which may be of interest for search:

Moulding in general on a relative small portion of preformed parts to be joined	B29C 70/845

B29C 45/14385

{Coating a portion of a bundle of inserts, e.g. making brushes}

Definition statement

This place covers:

EP676268

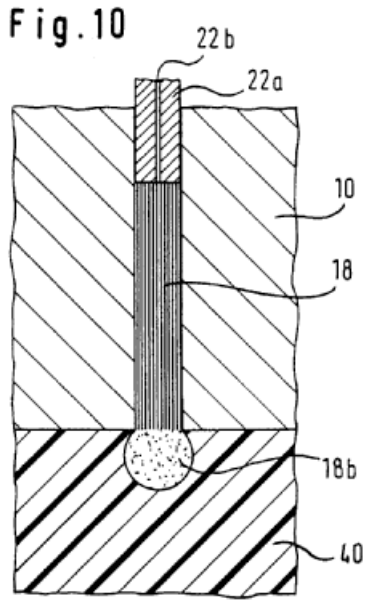

References

Informative references

Attention is drawn to the following places, which may be of interest for search:

Brushes characterised by mouldable materials for fixing the bristles	A46B 3/04
Moulding or casting a brush body around bristles or tufts	A46D 3/005

B29C 45/14409

{Coating profiles or strips by injecting end or corner or intermediate parts}

Definition statement

This place covers:

GB1431460, fig 2 corner 5;

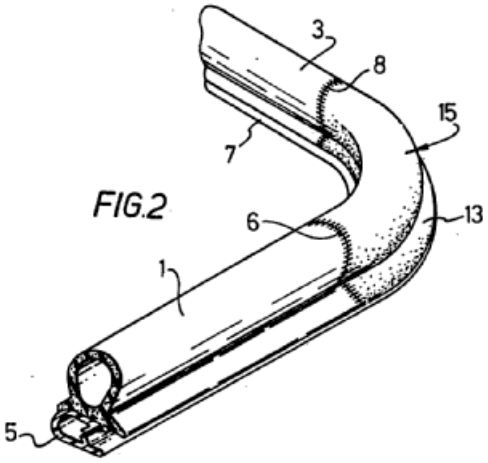

FIG.2

US4778550 end part 22

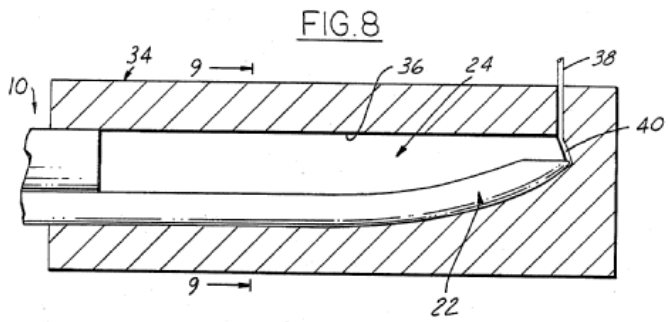

FIG.8

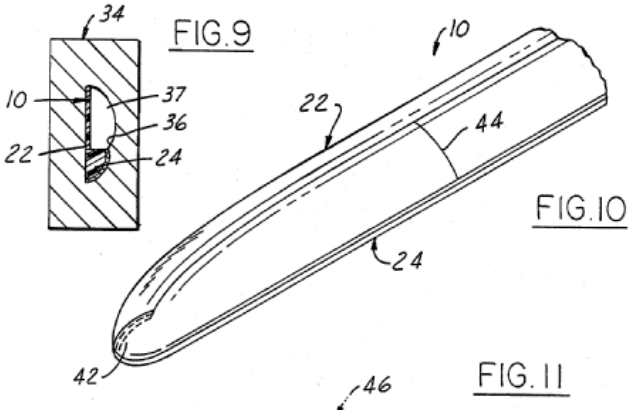

FIG.9

FIG.10

FIG.11

B29C 45/14418

{Sealing means between mould and article}

Definition statement

This place covers:

The application of separate sealing means, as well as sealing by mould parts, e.g. core mould and cavity walls

EP0845340-fig 4, seals 140 & 142,

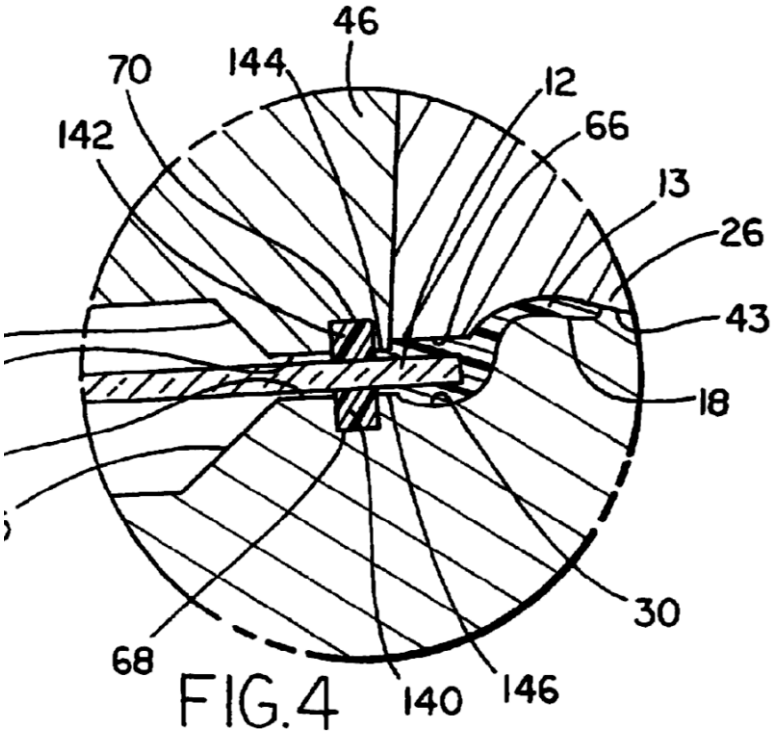

FIG.4

JP63-67127, sealing members 3 & 4

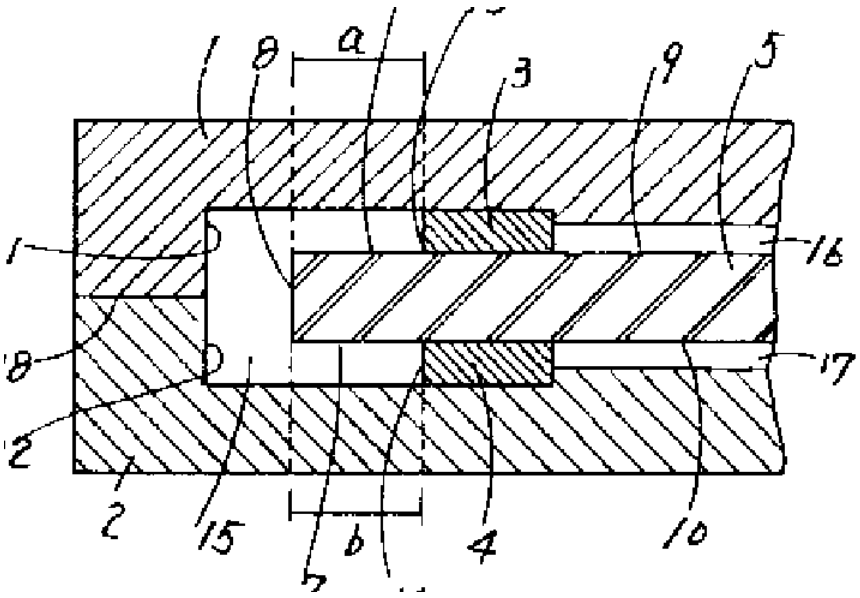

JP63-89313, seals 6a & 6b,

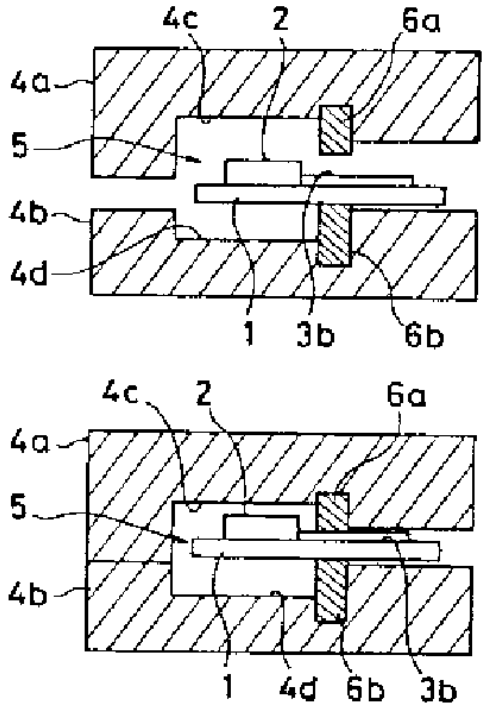

References

Informative references

Attention is drawn to the following places, which may be of interest for search:

Sealing means for sealing off parts of the insert during moulding in general	B29C 33/0044

B29C 45/14434

{Coating brittle material, e.g. glass (B29C 45/14377, B29C 45/14418 take precedence)}

Definition statement

This place covers:

Moulding on glass inserts

Moulding on windscreens, whereby the windscreen is not made out of the brittle material glass, but out of a transparent plastic.

B29C 45/14467

{Joining articles or parts of a single article (B29C 45/14377, B29C 45/14385, B29C 45/14581, B29C 45/14614 and B29C 45/006 take precedence)}

Definition statement

This place covers:

EP792960, fig 2 parts 1 & 7, connected by material 10

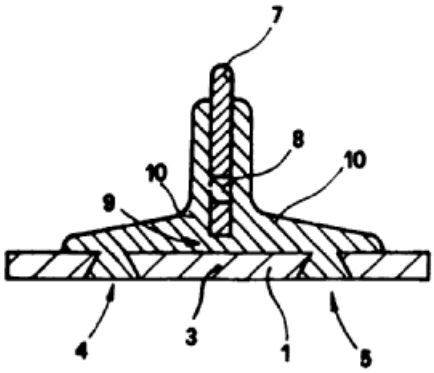

References

Limiting references

This place does not cover:

Joining articles moulded in separate cavities as final operation	B29C 45/006
Joining tubular articles	B29C 45/14614

Informative references

Attention is drawn to the following places, which may be of interest for search:

Joining preformed parts by the expansion of the moulding material	B29C 44/1228
Joining of preformed parts by moulding	B29C 65/70
Moulding in general on preformed parts to be joined	B29C 70/84
Casting around parts for joining	B22D 19/04
Key-type connections formed by solidification of injected material	F16B 3/005

B29C 45/14475

{Joining juxtaposed parts of a single article, e.g. edges of a folded container blank}

Definition statement

This place covers:

FR2272816 fig 1 & 2

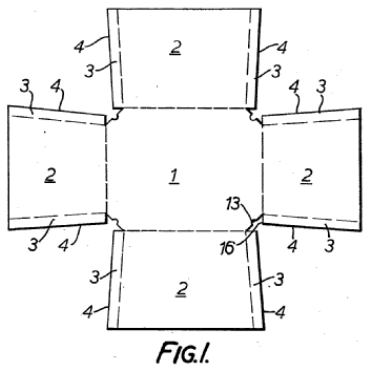

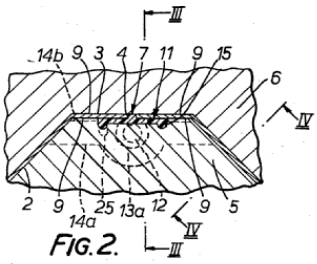

GB1360801 fig 1 part 5

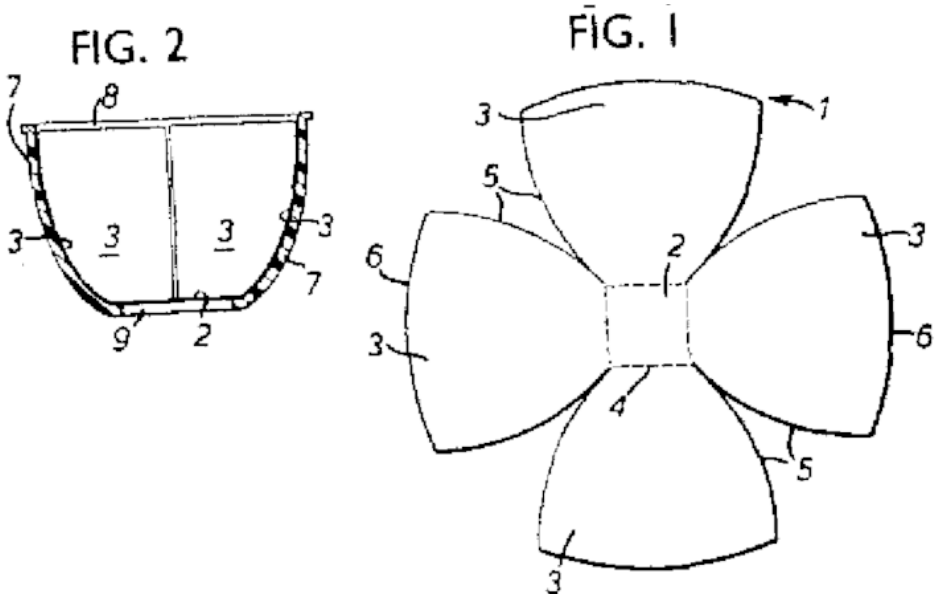

References

Informative references

Attention is drawn to the following places, which may be of interest for search:

Machines for making boxes by folding sheets combined with injection moulding for joining opposed edges	B31B 50/26, B31B 50/61

Glossary of terms

In this place, the following terms or expressions are used with the meaning indicated:

Juxtaposed	is being defined as lying next to each other within the same plane, while the juxtaposed parts touch each other along one edge

B29C 45/14491

{Injecting material between coaxial articles, e.g. between a core and an outside sleeve for making a roll}

Definition statement

This place covers:

WO0024561, fig 2, parts 31 and 33 connected by plastic 29

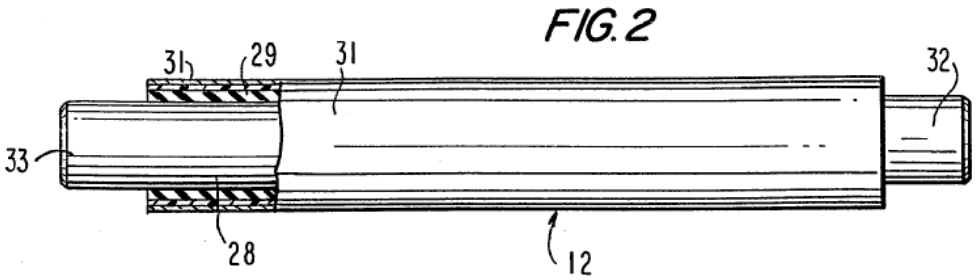

B29C 45/14508

{Joining juxtaposed sheet-like articles, e.g. for making trim panels}

Definition statement

This place covers:

EP953423 fig 1-3, articles 11-13

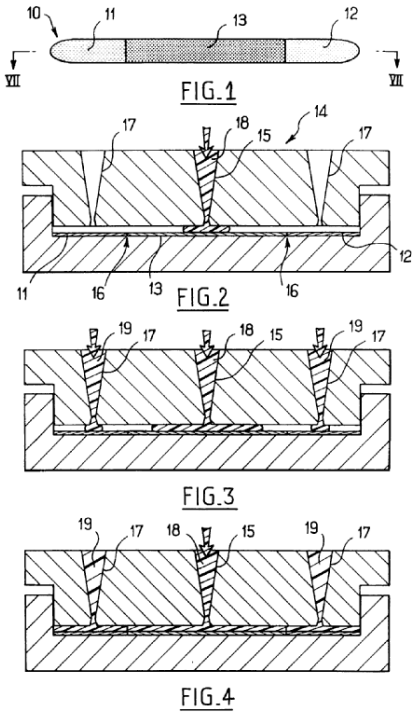

EP376263, fig 4, sheets 1a, 1b.

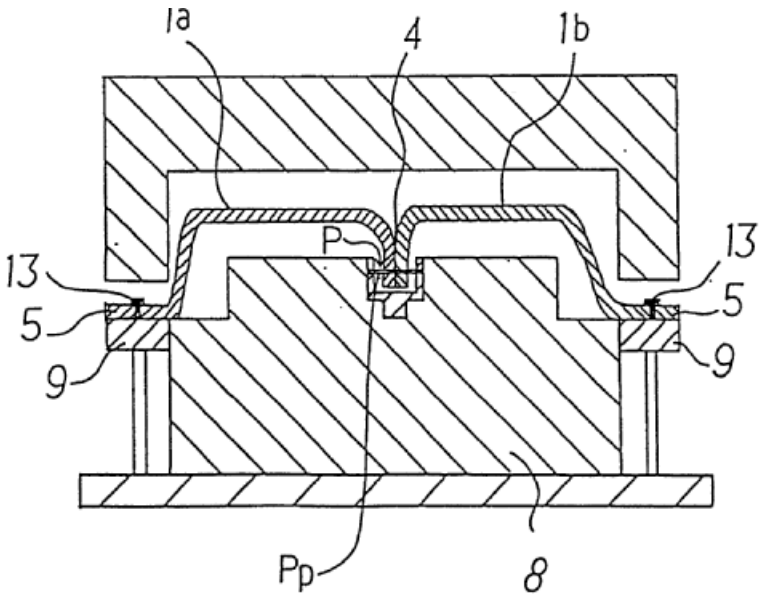

EP829337 fig 6 & fig 10.

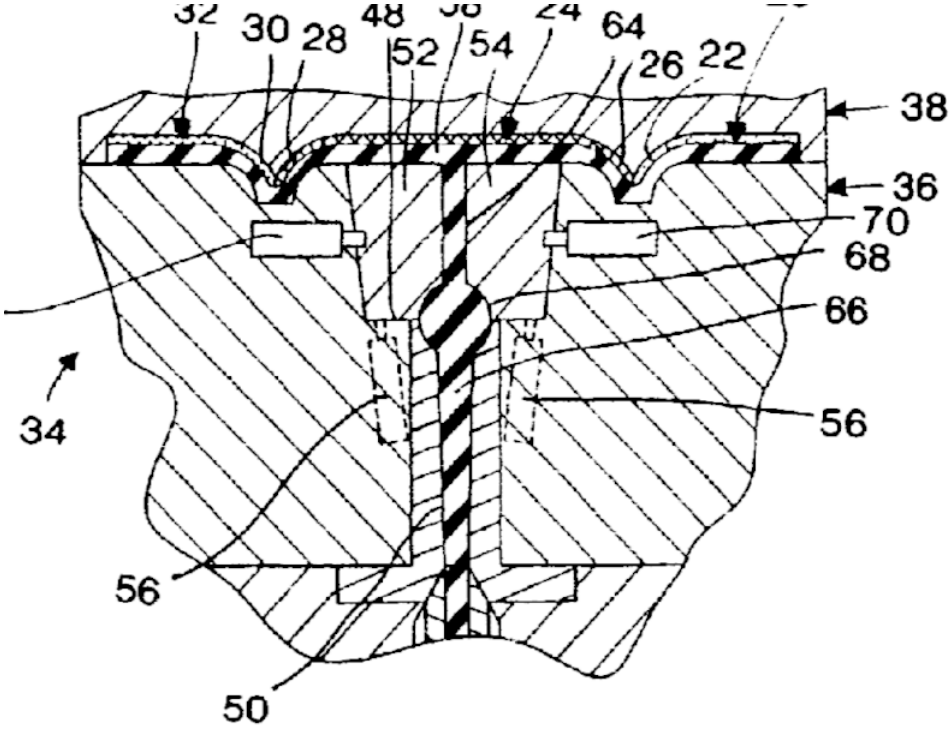

B29C 45/14549

{Coating rod-like, wire-like or belt-like articles (B29C 45/14426 takes precedence)}

Definition statement

This place covers:

EP719628, figure 1, rod like insert 21

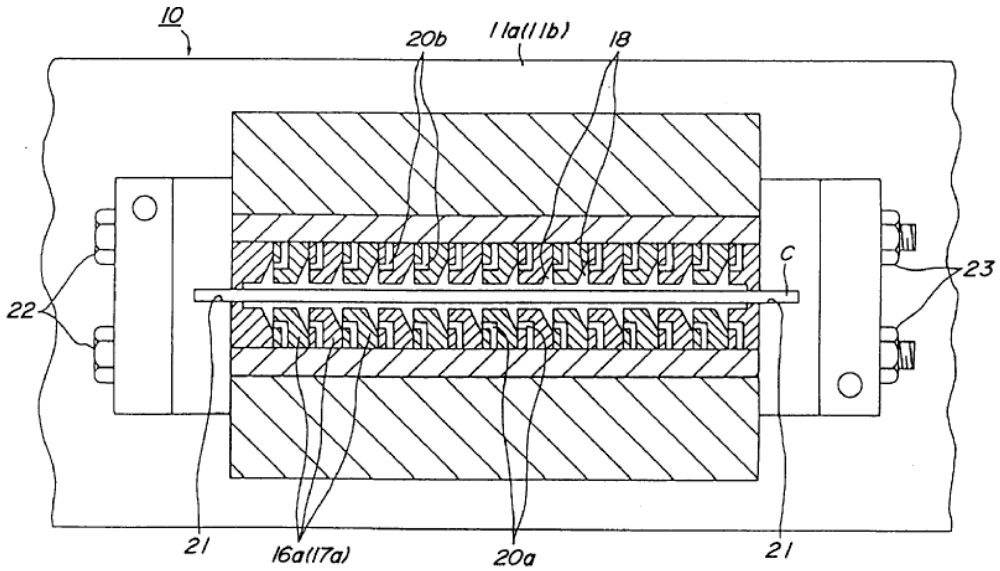

EP33848, figure 5 insulator insert 11

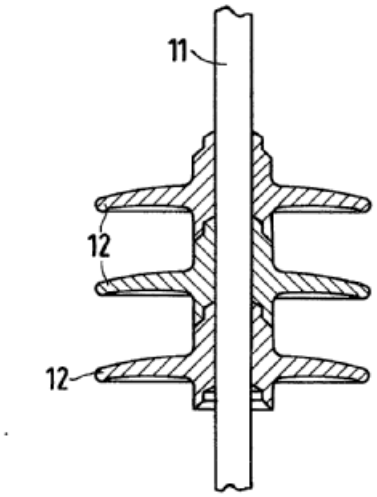

FIG 5

WO9107934, figure 3.

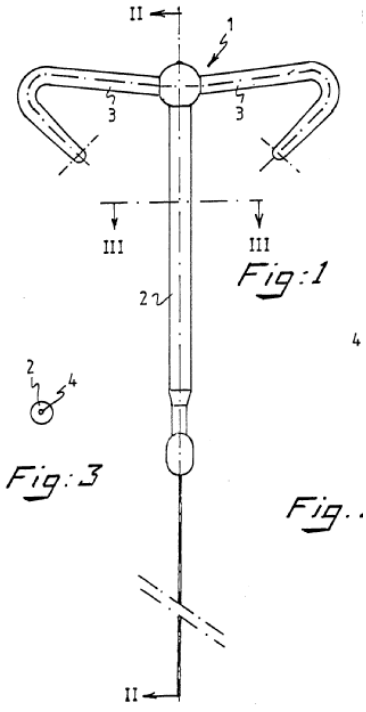

Fig:1

Fig:3

Fig..

References

Informative references

Attention is drawn to the following places, which may be of interest for search:

Assembly methods and manufacture of light guides	G02B 6/3833

B29C 45/14565

{at spaced locations, e.g. coaxial-cable wires}

Definition statement

This place covers:

EP225846, fig 4 wire 3, several plastic locations 21

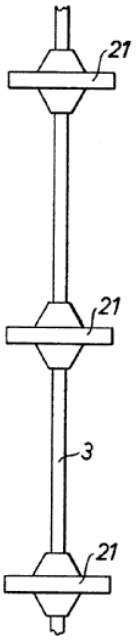

Fig. 4

EP221851, fig 6. Insert 1, plastics 22,23

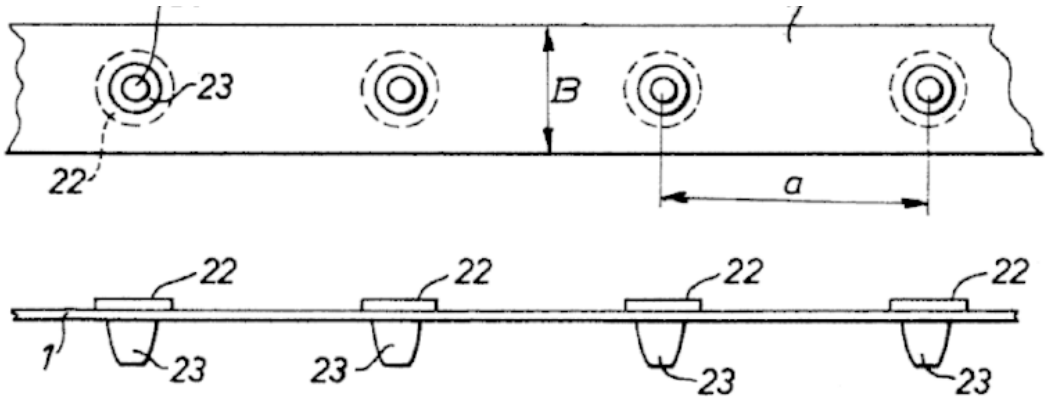

Fig. 6

B29C 45/14573

{Coating the edge of the article, e.g. for slide-fasteners}

Definition statement

This place covers:

EP641637 Insert 1, 24 at THE EDGE, at SPACED LOCATIONS.

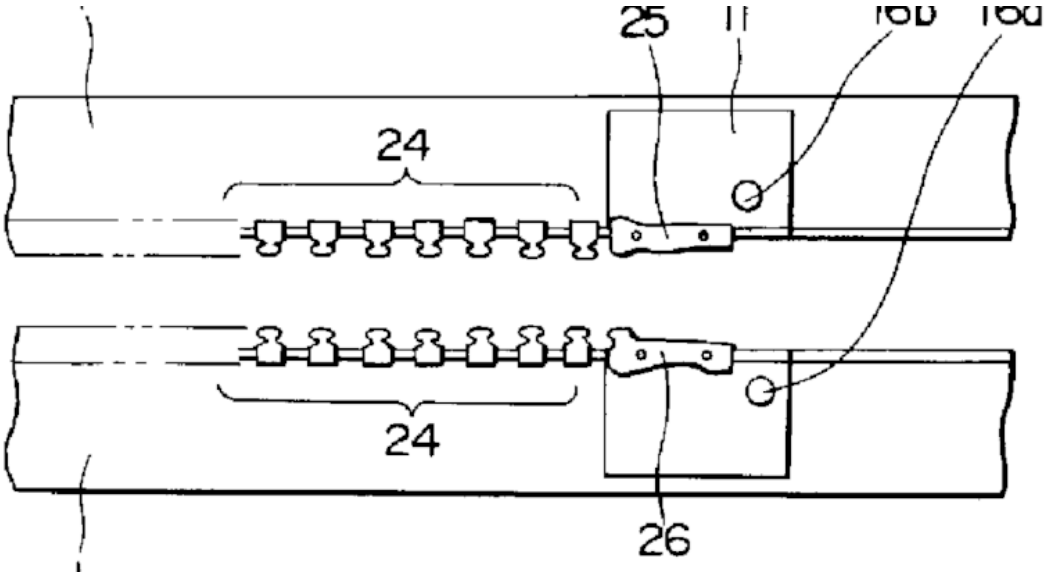

References

Informative references

Attention is drawn to the following places, which may be of interest for search:

Pressure die casting of slide fasteners	B22D 17/16
Producing fasteners with separate interlocking members	B29D 5/02

B29C 45/14581

{Coating the cross-over points of articles in the form of a network}

Definition statement

This place covers:

GB1128619 Inserts 20 & 20, plastic 18,

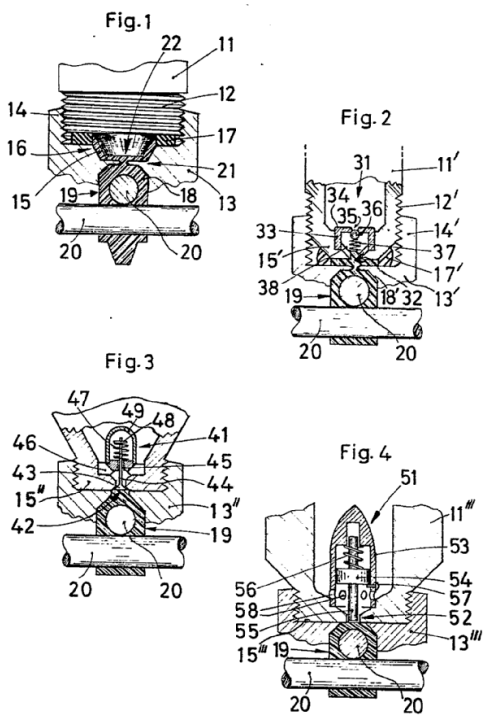

FR1435472, figure 2, wire 11 & 21, plastic 20

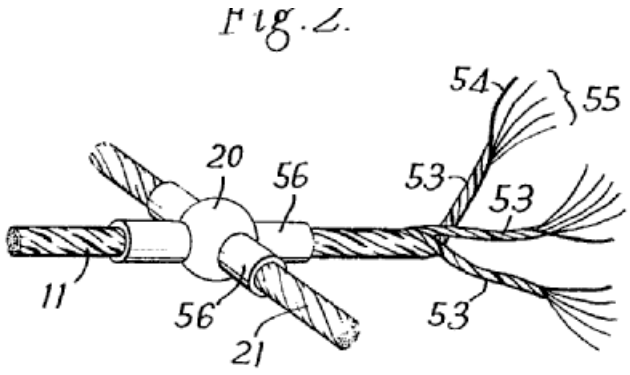

B29C 45/1459

{Coating annular articles}

Definition statement

This place covers:

Insert moulding processes for making rollers, wheels, bearings, tyres

EP712708 fig 1. Insert 21 & 22 - annular cavity C.

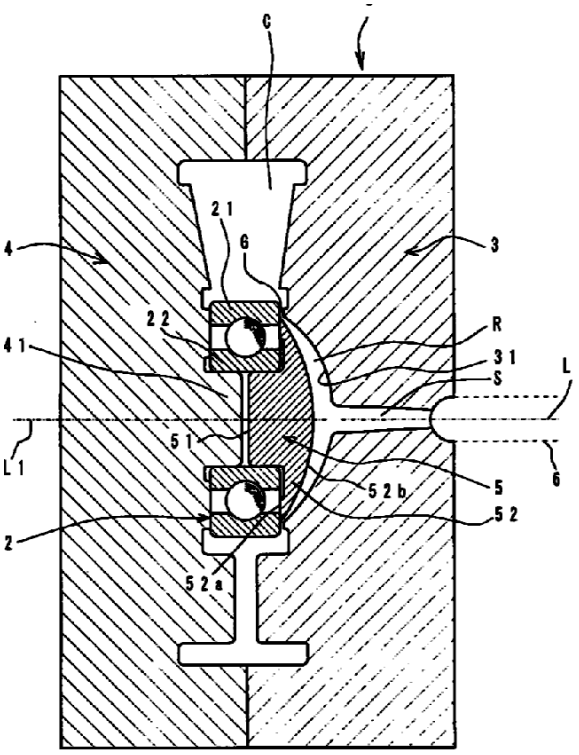

EP287495, fig 1. Retreading of a tyre.

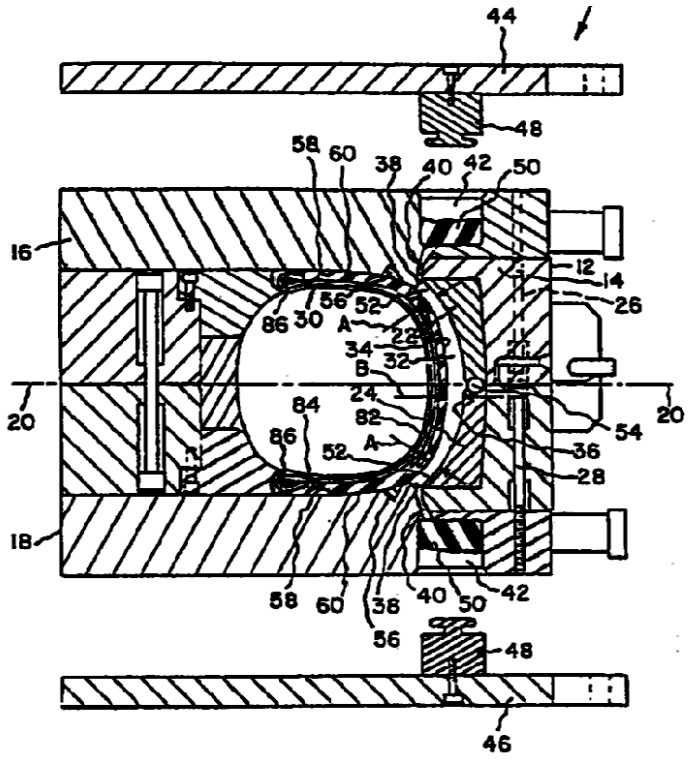

References

Informative references

Attention is drawn to the following places, which may be of interest for search:

Producing roller bodies	B29D 99/0032
Assembling wheels on an axle for making a castor	B60B 33/0028
Guiding rollers, wheels or the like formed by or on the outer element of a single bearing	F16C 13/006

B29C 45/14598

{Coating tubular articles}

Definition statement

This place covers:

US6210621, fig 4- 6 Part 61 is moulded onto part 8d.

Fig.4

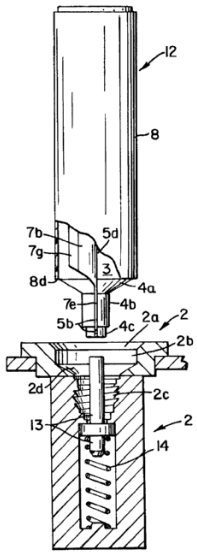

Fig.5

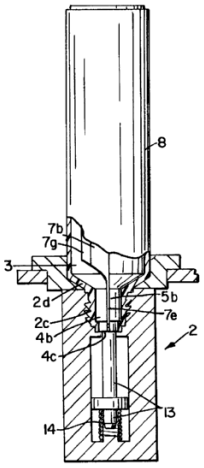

Fig.6

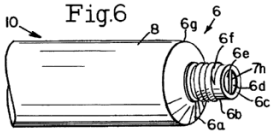

EP810073, fig 12

Fig. 12

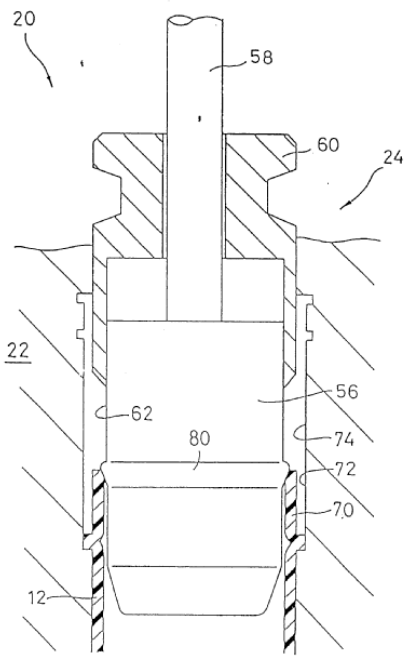

References

Informative references

Attention is drawn to the following places, which may be of interest for search:

Moulding on the end part of tubular articles in general	B29C 70/766
Producing rollers of cylinders	B29D 99/0035

Special rules of classification

Note that although the article is often coated only partly, the classification is only done in B29C 45/14598, since it takes precedence over B29C 45/14336

B29C 45/14614

{Joining tubular articles}

Definition statement

This place covers:

EP79575, fig 1 & 2. Plastic 12 and 14 connect the tubes 1, 2 and 3.

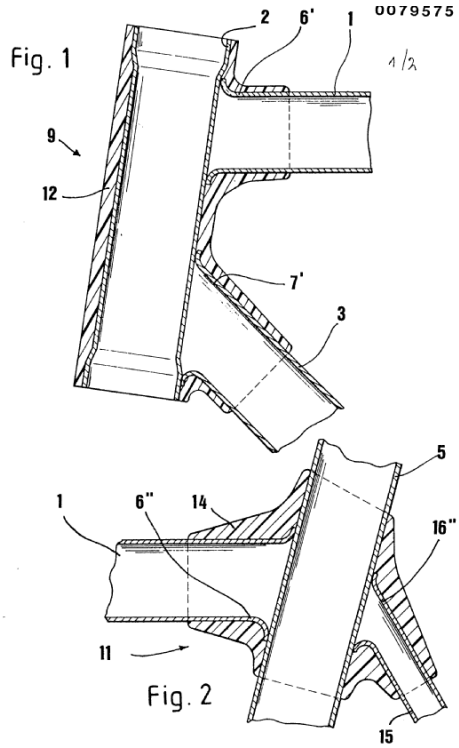

B29C 45/14622

{Lining the inner or outer surface of tubular articles}

Definition statement

This place covers:

WO9317847, fig 1-6, tubular article 12, core inside for pressure compensation, lining 30

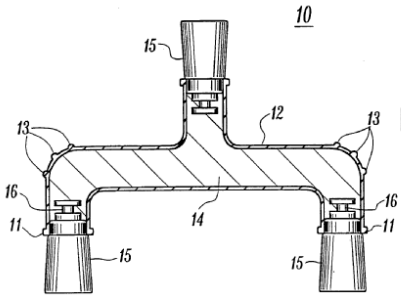

FIG. 1

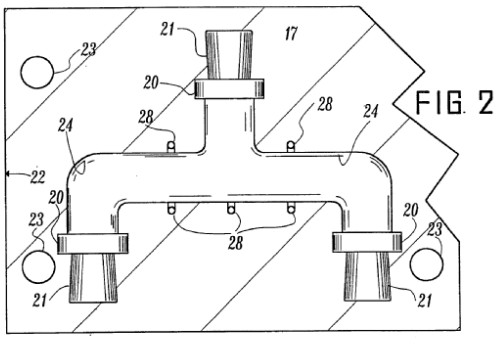

FIG. 2

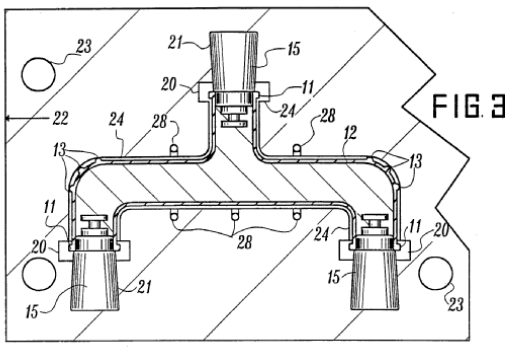

FIG. 3

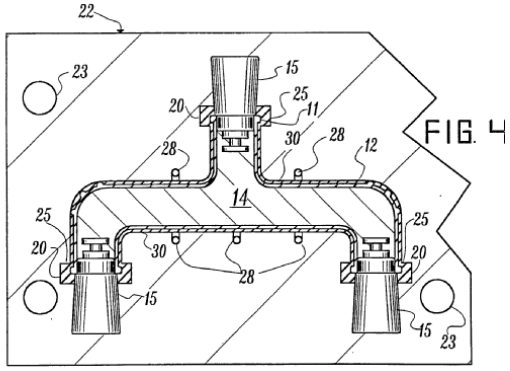

FIG. 4

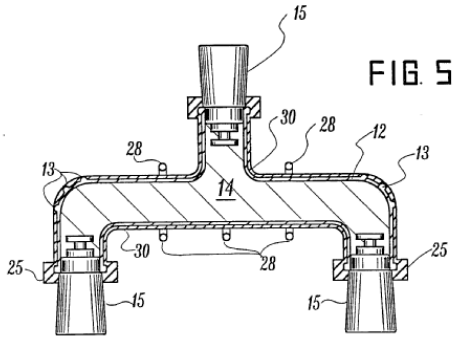

FIG. 5

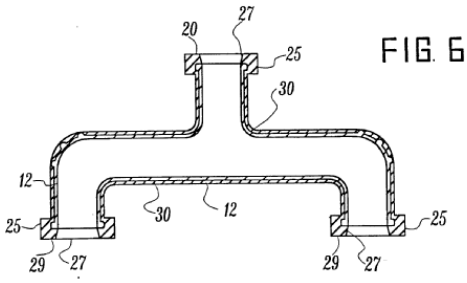

FIG. 6

B29C 45/14631

{Coating reinforcements (fibre reinforcements B29C 45/0005)}

Definition statement

This place covers:

Overmoulding of reinforcements, being an insert not forming a part of the moulding material before the moulding process:

e.g. overmoulding single wires or fibres, overmoulding metal parts used as reinforcement.

EP487476

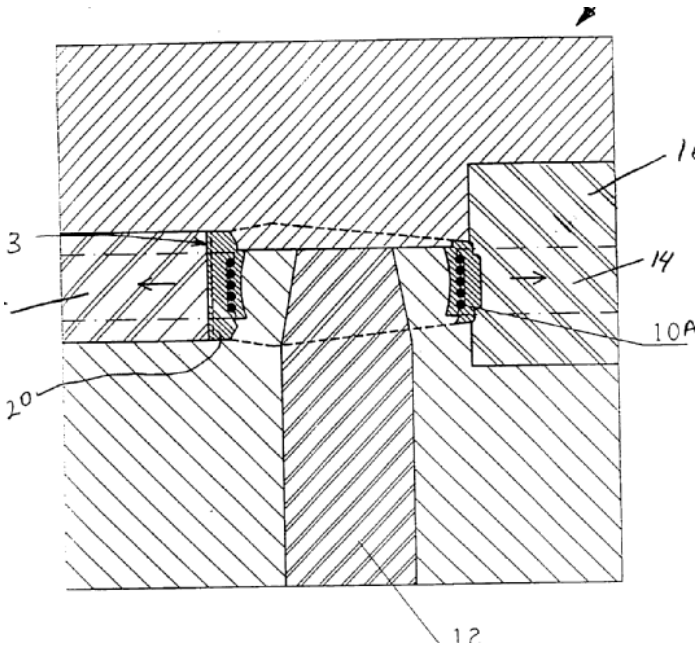

EP439033

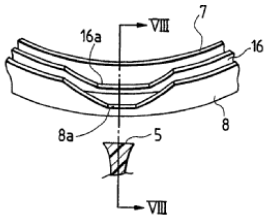

FIG. 8

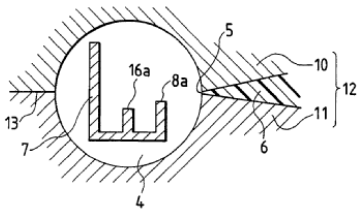

FIG. 9

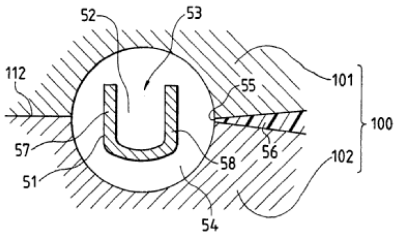

References

Informative references

Attention is drawn to the following places, which may be of interest for search:

Injection moulding using fibre reinforced plastics	B29C 45/0005
Incorporating articles with special properties	B29C 45/14778
Resin transfer moulding	B29C 70/48

B29C 45/14639

{for obtaining an insulating effect, e.g. for electrical components}

Definition statement

This place covers:

Overmoulding only when the disclosed moulding process is of importance due to the potentially very wide scope of possible applications (see also the informative references).

EP446489, fig 11

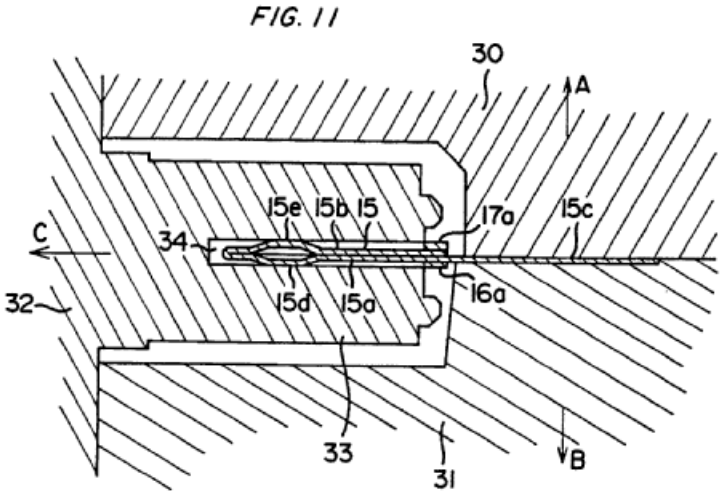

References

Informative references

Attention is drawn to the following places, which may be of interest for search:

IC or chip cards	B42D 25/00, G06K 19/07745
Cables, conductors	H01B 13/06
Resistors	H01C 17/02, H01C 1/034
Transformer, windings	H01F 41/127, H01F 27/022, H01F 41/005
Capacitors	H01G 13/00, H01G 4/002
Plugs, electric contacts	H01R 43/24
Repairing electric cables, joints, connectors	H02G 1/00, H02G 1/145
Machine engines, motors	H02K 15/12
Sealed casings	H05K 5/06
Apparatus or processes specially adapted for manufacturing or adjusting assemblages of electric components	H05K 13/00
LEDs	H10H 20/00

B29C 45/14647

{Making flat card-like articles with an incorporated IC or chip module, e.g. IC or chip cards}

Definition statement

This place covers:

Moulding processes, whereby the chip is embedded during the moulding process.

EP481557

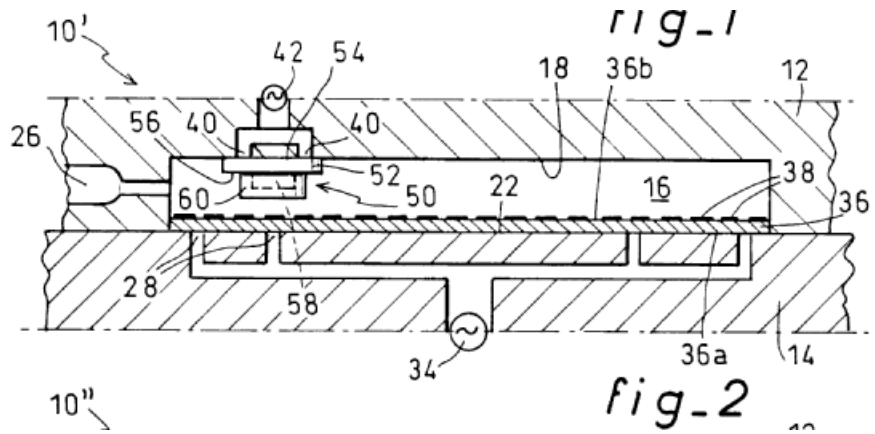

References

Informative references

Attention is drawn to the following places, which may be of interest for search:

Identity cards and the like	B42D 25/00
Mounting details of chip cards in general	G06K 19/07745

B29C 45/14655

{connected to or mounted on a carrier, e.g. lead frame}

Definition statement

This place covers:

EP489349, fig 4, chip 22, lead frame 18. Runner 412 & Gate 416, 418. The moulding step in this group usually concerns transfer moulding.

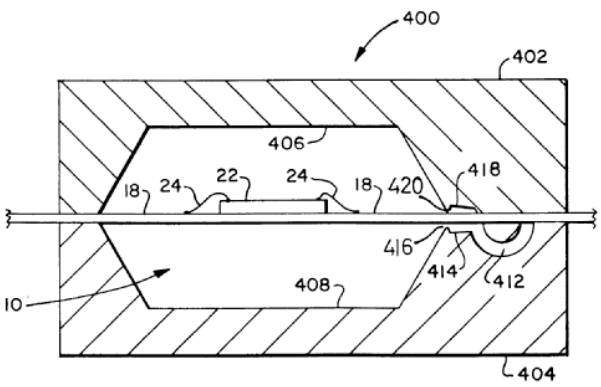

FIG. 4

Relationships with other classification places

The scope of this group is small in comparison to a typical related product group like H01L 21/565, since B29C 45/14655 is limited to disclosures related to the moulding process as such.

References

Informative references

Attention is drawn to the following places, which may be of interest for search:

Moulds for encapsulating semi-conductors	H01L 21/565
Apparatus for sealing, encapsulating for manufacturing or treating semiconductor or solid state devices	H01L 21/67126

B29C 45/1468

{Plants therefor}

Definition statement

This place covers:

EP825006, fig 1. Loading, unloading, etc.

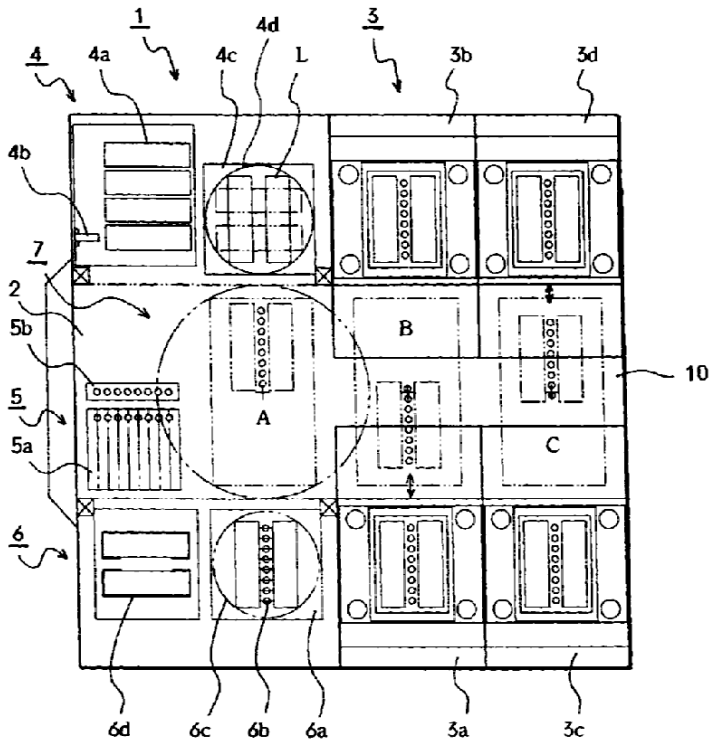

References

Informative references

Attention is drawn to the following places, which may be of interest for search:

Plants in general	B29C 45/0084

B29C 45/14688

{Coating articles provided with a decoration}

Relationships with other classification places

In B29C 45/14688, the insert is the decoration itself or the insert comprises a decoration and nothing more.

In the case with a plurality of layers where the decoration layer is one of them, the classification is B29C 45/14811

Furthermore, typical for B29C 45/14688 is that the moulding process is adapted or optimised for coating articles with a decoration.

Standard film overmoulding is classified B29C 45/14778, even if the film is provided with a decoration.

WO98/09790, fig 2 & 5, insert 18 and plastic 28.

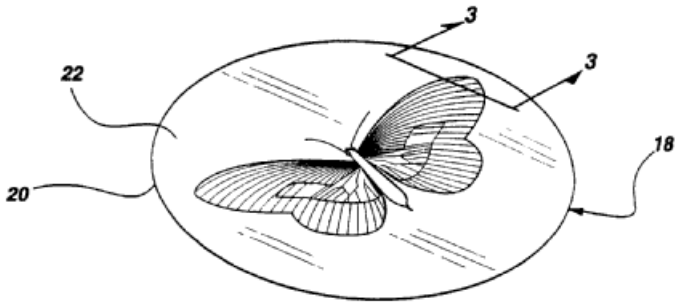

Fig.2

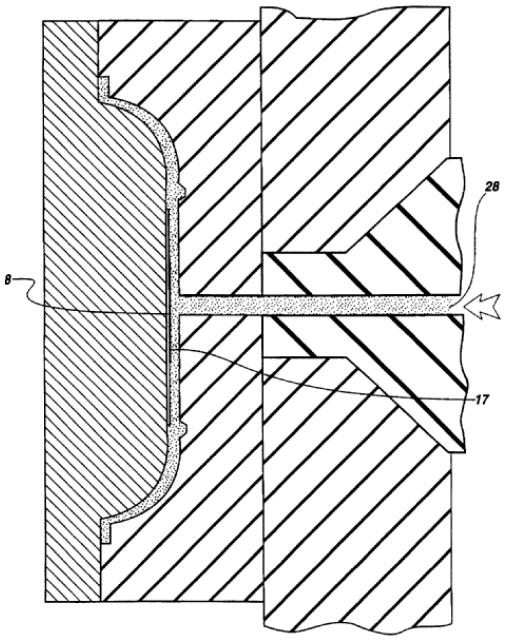

Fig.5

References

Limiting references

This place does not cover:

Incorporating decorated single layer or multi layered films by standard moulding processes	B29C 45/14778, B29C 45/14811
Applying transfer foils	B29C 45/14827

Glossary of terms

In this place, the following terms or expressions are used with the meaning indicated:

Decoration	A film provided with ink, paint or like means to create a decorative effect or information.

B29C 45/14754

{being in movable or releasable engagement with the coating, e.g. bearing assemblies}

Definition statement

This place covers:

Overmoulding inserts that can move relatively to the plastic after finishing the moulding process. Typically applied for making bearings and to preventing adhesion.

EP27770, insert 37 and plastic 16.

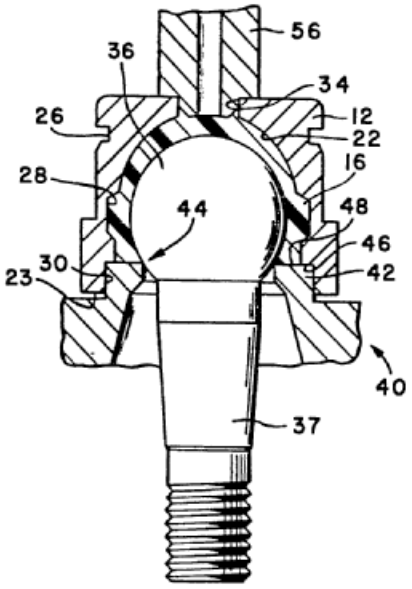

FIG. 4

B29C 45/14778

{the article consisting of a material with particular properties, e.g. porous, brittle}

Definition statement

This place covers:

E.g. moulding on films

Special rules of classification

In this group, it is of upmost importance that the material, condition or the property of the insert is identified by allocating the appropriate Indexing Code as provided in the subclass B29K

B29C 45/14786

{Fibrous material or fibre containing material, e.g. fibre mats or fibre reinforced material}

Definition statement

This place covers:

Moulding processes whereby inserts are coated, but not impregnated

EP547625, insert 13 is not completely impregnated but coated at only one side

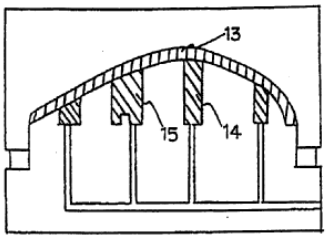

Fig. 3

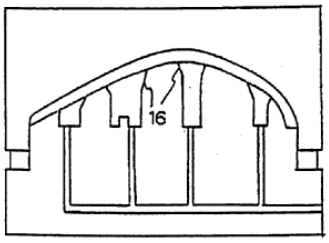

JP5269785

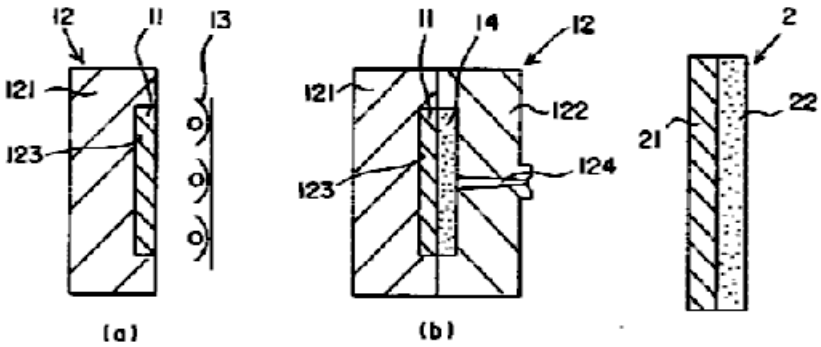

Relationships with other classification places

The difference between B29C 45/14786 and resin transfer moulding (B29C 70/48) is the way of coating.

In the group B29C 45/14786, the fibrous insert is not completely impregnated but coated at only one side.

A process, whereby an insert of fibrous material is complete impregnated refers to resin transfer moulding, even if the process is done by injection moulding.

Coating of single fibres/wires is classified B29C 45/14631

References

Informative references

Attention is drawn to the following places, which may be of interest for search:

Coating reinforcement	B29C 45/14631
Resin transfer moulding	B29C 70/48

B29C 45/14795

{Porous or permeable material, e.g. foam}

Definition statement

This place covers:

EP743155 fig 8a-8d, directly injection on two layers of foam.

FIG. 8A

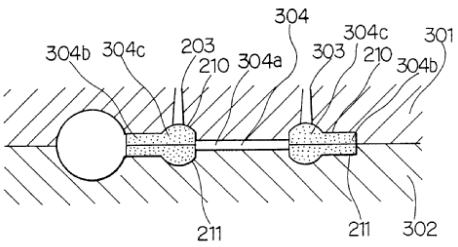

FIG. 8B

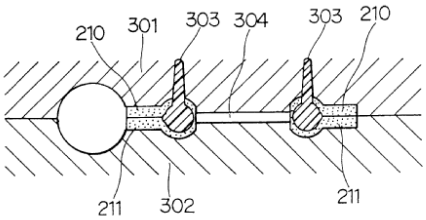

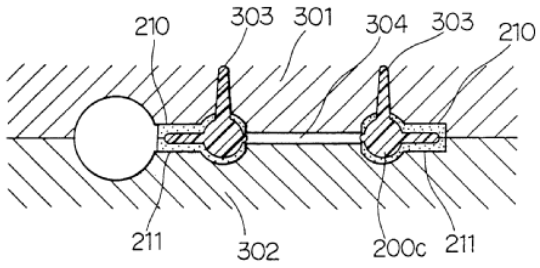

FIG. 8D

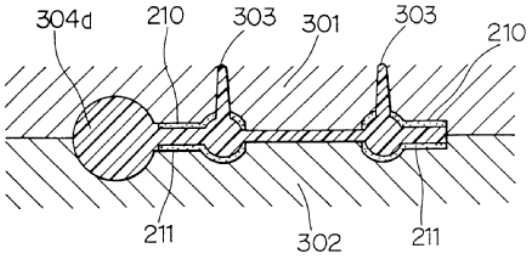

Relationships with other classification places

Note the difference between B29C 45/14795 and B29C 45/14811.

Moulding processes, whereby material is injected directly on foam, is covered by B29C 45/14795.

In the case of a multilayer insert where one of the layers consist of foam, the classification is B29C 45/14811

References

Informative references

Attention is drawn to the following places, which may be of interest for search:

Coating multilayered articles	B29C 45/14811

B29C 45/14811

{Multilayered articles (B29C 45/14827 takes precedence)}

Definition statement

This place covers:

EP1025973, fig 1, release layer, protecting layer, etc.

Fig. 1

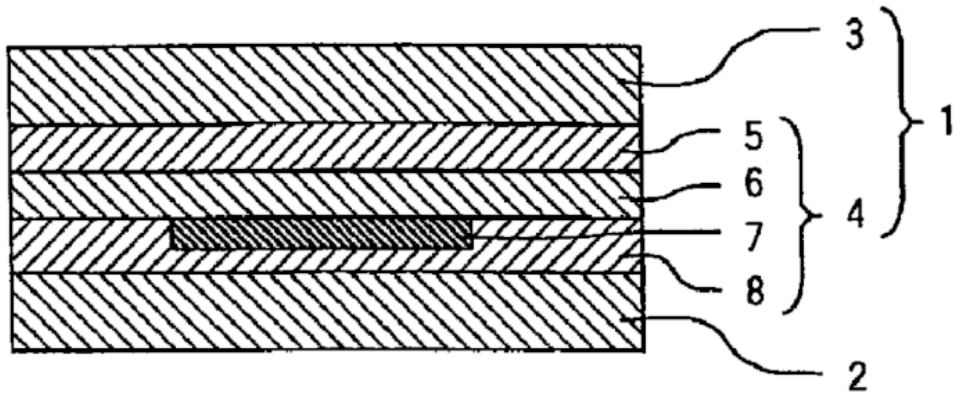

Injection fig 7 & 8.

Fig. 7

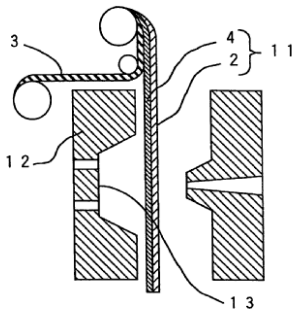

Fig. 8

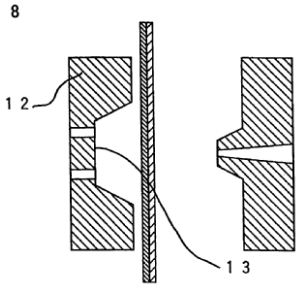

Relationships with other classification places

Concerning the preference of B29C 45/14827, it should be taken into account that this preference concerns either a double layered product where one layer is the transfer foil or a multilayered product, but were the invention concerns the use transfer foil as such (the identity of the other layers are not important for the invention).

Moulding processes, where the invention concerns the making of the multilayered inserts and where the fact that one of the layers can be removed is only disclosed on the level of additional information, is covered by the group B29C 45/14811.

References

Limiting references

This place does not cover:

Insert and adhesive layer only	B29C 45/14311
Insert with only decoration, paint, ink	B29C 45/14688
Coating a porous layer	B29C 45/14795

Informative references

Attention is drawn to the following places, which may be of interest for search:

laminated inserts overmoulded by injection moulding (Japanese F-term)	4F206/AD20, 4F206/AG03

Special rules of classification

In this group, it is highly desirable to identify every layer of the insert by allocating the appropriate Indexing Code as provided in the subclass B29K, or even the ones provided in B29L

Typical examples:

Fabric layers: B29K 2713/00

Scratch resistant layers, Abrasion resistant layers, protection layers: B29K 2995/0089

Barrier layers for gases: B29K 2995/0067

Decorative layers: B29K 2995/002

Porous layers, foam layers: B29K 2715/003

Adhesive layers: B29K 2715/006

Paint layers: B29L 2009/006

Metal layers: B29K 2705/00, B29L 2009/003

Layers with a metalized surface: B29L 2009/008

Hydrophobic layers: B29K 2995/0093

Hologram layers: B29L 2031/7224

B29C 45/14819

{the inserts being completely encapsulated}

Definition statement

This place covers:

Making of golf balls by insert moulding

EP425933

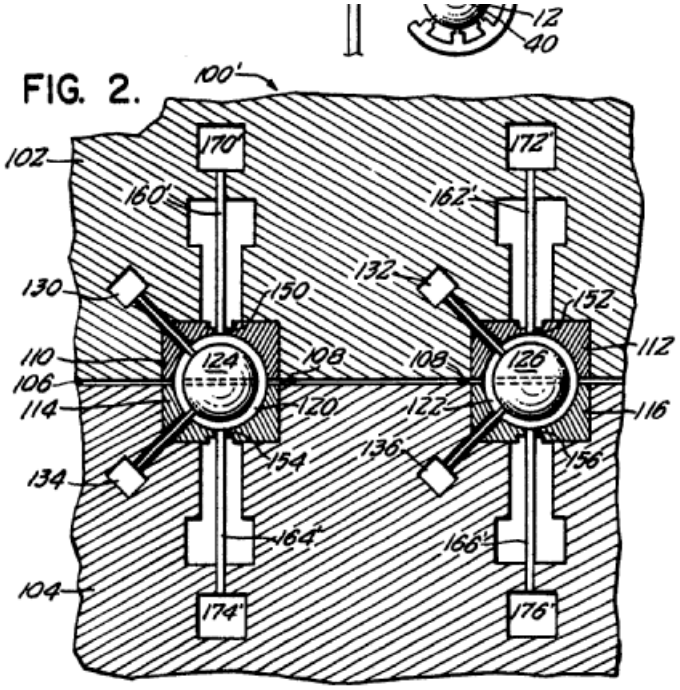

References

Limiting references

This place does not cover:

Completely encapsulating reinforcement	B29C 45/14631

Informative references

Attention is drawn to the following places, which may be of interest for search:

Positioning articles in the mould by means being retractable during the injection	B29C 45/14073

B29C 45/14827

{using a transfer foil detachable from the insert}

Definition statement

This place covers:

E.g. applying transfer foils to obtain decorative moulded articles.

Multilayered inserts whereby one layer is transfer foil to be removed from the remaining insert during the moulding process.

WO9516555, the dye material is transferred from the support layer to the plastic, the support layer is afterwards removed.

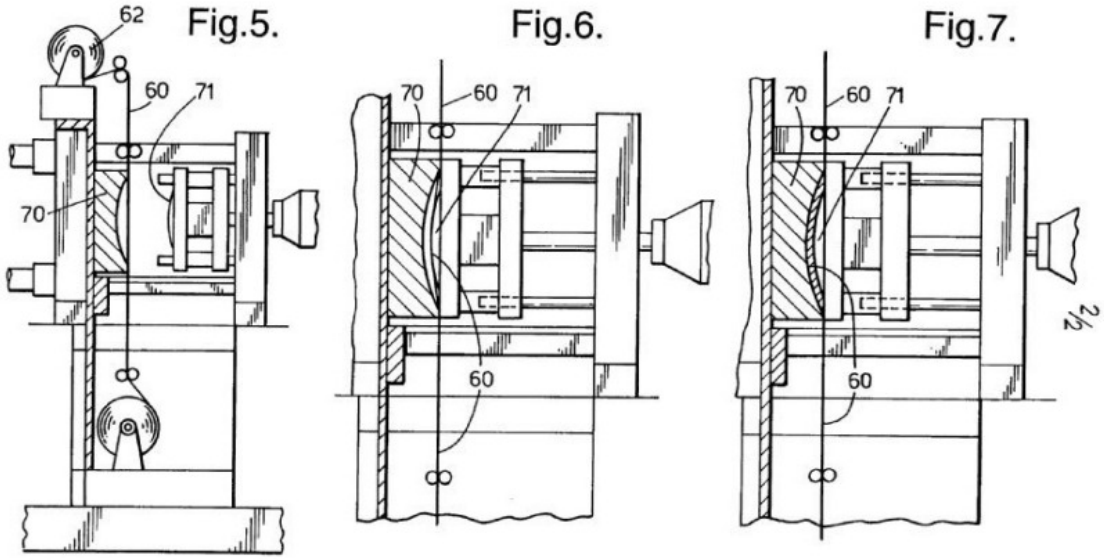

B29C 2045/14852

{incorporating articles with a data carrier, e.g. chips}

References

Informative references

Attention is drawn to the following places, which may be of interest for search:

Memory cards or chip cards	B29L 2017/006

B29C 2045/14934

{Preventing penetration of injected material between insert and adjacent mould wall}

References

Informative references

Attention is drawn to the following places, which may be of interest for search:

Sealing means between mould and article	B29C 45/14418

B29C 45/16

Making multilayered or multicoloured articles {(B29C 45/0062 takes precedence; feeding colouring materials into the injection unit B29C 45/1816)}

References

Limiting references

This place does not cover:

Injection moulding of successively moulded portions rigidly joined to each other	B29C 45/0003
Injection moulding of interconnected elements which are movable with respect to each other	B29C 45/0017
Joining articles injection moulded in separate cavities by injection moulding as final operation	B29C 45/0062

B29C 45/1615

{The materials being injected at different moulding stations}

Special rules of classification

If of general interest, classification as provided in the B29C 45/04 and it subgroups can be allocated to documents classified in this group, typically at additional information level to identify the type of mould movement. Exceptionally the classification in B29C 45/04 or its subgroup can be added at inventive level, if the alleged invention relates to the movement of the mould, whereby said movement is of general interest and use.

B29C 45/1634

{with a non-uniform dispersion of the moulding material in the article, e.g. resulting in a marble effect}

References

Informative references

Attention is drawn to the following places, which may be of interest for search:

Co-extruding a multicoloured striated pattern	B29C 48/175

B29C 45/1639

{Removable partitions between adjacent mould cavity portions}

Definition statement

This place covers:

Multi-component injection moulding processes whereby the second cavity is present before movement of the displaceable mould part.

B29C 45/1642

{having a "sandwich" structure (B29C 45/1603 takes precedence)}

References

Limiting references

This place does not cover:

Multiway nozzles	B29C 45/1603

B29C 45/1646

{Injecting parison-like articles (B29C 45/1643 takes precedence)}

References

Informative references

Attention is drawn to the following places, which may be of interest for search:

Blow moulding of parisons with at least one injected layer	B29C 2949/3032

B29C 45/1671

{with an insert}

Special rules of classification

In this class it is highly desirable to identify all aspects related to insert moulding by allocating the appropriate classification as provided for in B29C 45/14 and subgroups at additional information level.

B29C 45/1675

{using exchangeable mould halves}

References

Limiting references

This place does not cover:

Multi-component injection moulding using different moulding stations	B29C 45/1615

B29C 45/1684

{Injecting parison-like articles (B29C 45/1625, B29C 45/1643 and B29C 45/1646 take precedence)}

References

Informative references

Attention is drawn to the following places, which may be of interest for search:

Blow moulding of parisons with at least one injected layer	B29C 2949/3032

B29C 2045/1698

{multicoloured articles moulded in one step}

References

Informative references

Attention is drawn to the following places, which may be of interest for search:

Making multi-layered or multicoloured articles with a non-uniform dispersion of the moulding material in the article, e.g. resulting in a marble effect	B29C 45/1634

B29C 45/17

Component parts, details or accessories; Auxiliary operations

Definition statement

This place covers:

filters not in the nozzle located

exchanging runner channels

locking of mold halves during transport

B29C 45/1701

{using a particular environment during moulding, e.g. moisture-free or dust-free}

Definition statement

This place covers:

Moulding in an environment of inert gasses, reactive gasses, e.g. for preventing mould sweating or plastic oxidation

References

Limiting references

This place does not cover:

Injection moulding in vacuum environment	B29C 45/34

Informative references

Attention is drawn to the following places, which may be of interest for search:

Casting under special conditions	B29C 39/42
Compression moulding under special conditions	B29C 43/56
Blow moulding in a particular environment	B29C 49/46
Moulding in general using a particular environment	B29C 2791/005
Clean rooms for manipulators	B25J 21/005

B29C 45/1703

{Introducing an auxiliary fluid into the mould (B29C 45/1701 takes precedence)}

Definition statement

This place covers:

the application of cooling or heating fluids as auxiliary fluid, counterpressure methods

B29C 45/1704

{the fluid being introduced into the interior of the injected material which is still in a molten state, e.g. for producing hollow articles (B29C 45/1732 and B29C 45/1734 take precedence; injection blow-moulding B29C 49/06)}

Definition statement

This place covers:

IGM (internal gas moulding)

References

Informative references

Attention is drawn to the following places, which may be of interest for search:

EGM (external gas moulding)	B29C 45/174

B29C 45/1706

{using particular fluids or fluid generating substances}

Definition statement

This place covers:

E.g. the use of a plurality of gasses, refrigerating gasses, and other substances in combination with standard fluid

B29C 45/1735

{Nozzles for introducing the fluid through the mould gate, e.g. incorporated in the injection nozzle}

References

Informative references

Attention is drawn to the following places, which may be of interest for search:

Blow needles for blow moulding	B29C 49/58

B29C 45/174

{Applying a pressurised fluid to the outer surface of the injected material inside the mould cavity, e.g. for preventing shrinkage marks}

Definition statement

This place covers:

EGM (External Gas Moulding)

References

Informative references

Attention is drawn to the following places, which may be of interest for search:

IGM	B29C 45/1704

Special rules of classification

This technology is mainly applied for avoiding shrinkage marks, however these documents are not additionally being classified in B29C 45/0025

B29C 2045/1741

{Seals preventing pressurized fluid to escape from the mould cavity}

References

Informative references

Attention is drawn to the following places, which may be of interest for search:

Mould seals for injection moulding	B29C 45/2608

B29C 45/1742

{Mounting of moulds; Mould supports (mounting of exchangeable mould inserts B29C 45/2675)}

References

Informative references

Attention is drawn to the following places, which may be of interest for search:

Mounting of moulds in general	B29C 33/305
Mould plates mounted on frames	B29C 33/307
Mounting of stampers	B29C 45/263

B29C 45/1744

{Mould support platens}

References

Informative references

Attention is drawn to the following places, which may be of interest for search:

Means for maintaining press tables or press platens against deflection	B30B 15/007

B29C 45/1747

{Tie-rod connections}

References

Informative references

Attention is drawn to the following places, which may be of interest for search:

Mounting of press columns in presses	B30B 15/045

B29C 45/1748

{Retractable tie-rods}

References

Informative references

Attention is drawn to the following places, which may be of interest for search:

Mounting of press columns in presses	B30B 15/045

B29C 45/1751

{Adjustment means allowing the use of moulds of different thicknesses}

Definition statement

This place covers:

the control and regulation of mould thickness adjustment

B29C 45/1753

{Cleaning or purging, e.g. of the injection unit (B29C 45/24 takes precedence)}

Definition statement

This place covers:

cleaning the injection unit

cleaning the mould

References

Informative references

Attention is drawn to the following places, which may be of interest for search:

Cleaning of moulds and cores in general	B29C 33/72
Cleaning extruder parts	B29C 48/27

B29C 45/1756

{Handling of moulds or mould parts, e.g. mould exchanging means (moulds per se B29C 45/26)}

References

Informative references

Attention is drawn to the following places, which may be of interest for search:

Handling of moulds in general	B29C 31/006
Mounting of moulds	B29C 33/305

B29C 45/176

{Exchanging the injection unit or parts thereof}

References

Informative references

Attention is drawn to the following places, which may be of interest for search:

Exchanging extruder parts	B29C 48/256

B29C 45/1761

{Means for guiding movable mould supports or injection units on the machine base or frame; Machine bases or frames (B29C 45/1747 takes precedence)}

References

Informative references

Attention is drawn to the following places, which may be of interest for search:

Mould plates mounted on frames:	B29C 33/307

B29C 45/1769

{Handling of moulded articles or runners, e.g. sorting, stacking, grinding of runners}

Definition statement

This place covers:

Sorting, guiding, stacking, grinding

References

Limiting references

This place does not cover:

shaping of moulded articles	B29C 45/0055
heating and/or cooling moulded parts	B29C 45/7207

B29C 45/1774

{Display units or mountings therefor; Switch cabinets}

Definition statement

This place covers:

(mechanical) features of the display unit itself.

References

Informative references

Attention is drawn to the following places, which may be of interest for search:

using visualisation means in moulding processes general	B29C 2037/906

B29C 45/1775

{Connecting parts, e.g. injection screws, ejectors, to drive means}

References

Informative references

Attention is drawn to the following places, which may be of interest for search:

Drive connections for presses	B30B 15/068

B29C 45/1777

{Nozzle touch mechanism}

Definition statement

This place covers:

Adjusting the nozzle in respect to the mould

B29C 2045/1793

{by an electric linear motor}

References

Informative references

Attention is drawn to the following places, which may be of interest for search:

Linear motors; Sectional motors	H02K 41/02

B29C 2045/1794

{by a rotor or directly coupled electric motor, e.g. using a tubular shaft motor}

References

Informative references

Attention is drawn to the following places, which may be of interest for search:

Axially movable screws rotated by the coaxial rotor of an electric motor	B29C 2045/5024

B29C 2045/1797

{Machine parts provided with a shroud or cover or shield, e.g. for preventing oil or dust scattering}

References

Informative references

Attention is drawn to the following places, which may be of interest for search:

Auxiliary operation using a particular environment during moulding, e.g. moisture-free or dust-free	B29C 45/1701
Means for guiding or orienting articles while dropped from the mould	B29C 45/1771
Moulds having venting means	B29C 45/34
Used as safety device	B29C 45/84

B29C 45/18

Feeding the material into the injection moulding apparatus {, i.e. feeding the non-plastified material into the injection unit}

References

Informative references

Attention is drawn to the following places, which may be of interest for search:

Dispensing moulding material from hoppers in general	B29C 31/02
Feeding of the material to be moulded	B29C 31/04
Feeding the material to be extruded	B29C 48/285

B29C 45/1808

{Feeding measured doses}

Definition statement

This place covers:

feeding of tablets, preforms

References

Informative references

Attention is drawn to the following places, which may be of interest for search:

Injection of preformed charges of material	B29C 45/462

B29C 45/1816

{Feeding auxiliary material, e.g. colouring material}

Definition statement

This place covers:

E.g. feeding auxiliary material into the runner channel, the auxiliary material can for example be recycled material or fibre reinforcements

References

Informative references

Attention is drawn to the following places, which may be of interest for search:

Feeding additives to the extruder	B29C 48/29

B29C 45/1858

{Changing the kind or the source of material, e.g. using a plurality of hoppers}

Definition statement

This place covers:

Changing the feed from hoppers containing the same material or different materials, using one hopper to which different materials are supplied

Material switches

B29C 45/20

Injection nozzles {(B29C 45/1603 takes precedence)}

Definition statement

This place covers:

The machine nozzle, injecting the moulding material into the mould

References

Limiting references

This place does not cover:

Machine nozzles specially adapted for multi-component injection moulding	B29C 45/1603

Informative references

Attention is drawn to the following places, which may be of interest for search:

Runner nozzles, i.e. the nozzles located within the mould	B29C 45/27

B29C 45/22

Multiple nozzle systems

References

Informative references

Attention is drawn to the following places, which may be of interest for search:

Using a material distribution system for two or more fixed moulds	B29C 45/125

B29C 45/231

{Needle valve systems therefor}

Definition statement

This place covers:

needles valves that are pushed against a seat inside of a nozzle.

B29C 45/24

Cleaning equipment

Definition statement

This place covers:

all filters, when they are located upstream of the nozzle within the injection unit.

References

Informative references

Attention is drawn to the following places, which may be of interest for search:

Filters in the mould	B29C 45/17
Filters in extrusion nozzles or dies	B29C 48/69
Filtering material to be shaped	B29B 13/10

B29C 45/26

Moulds

Definition statement

This place covers:

Moulds for particular articles

EP263575

Special rules of classification

Attention for the assignment of the Indexing Codes as provided in the subclass B29L!

B29C 45/2602

{Mould construction elements}

Definition statement

This place covers:

DE4337942, fig 1 Klinkenzug (=constructional element) to allow the several mould elements to move in a certain order.

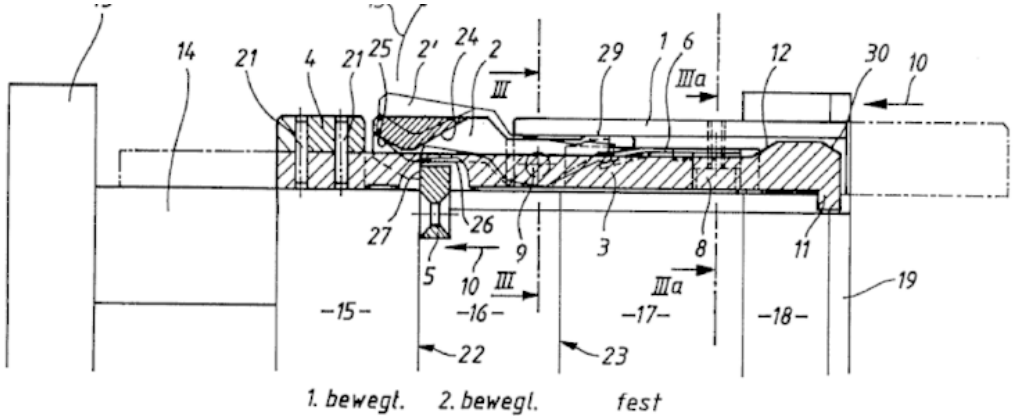

FIG 1

DE4124590, fig 4, interconnecting elements

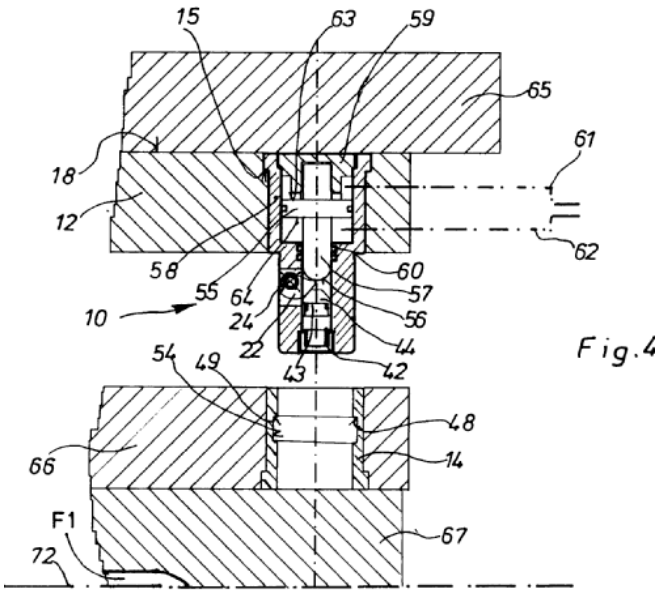

Fig.4

B29C 45/2606

{Guiding or centering means}

Definition statement

This place covers:

Guiding and centering of the moulds relatively to each

Guiding and centering a mould half on the mould carrier plate

DE1951908, fig 2,

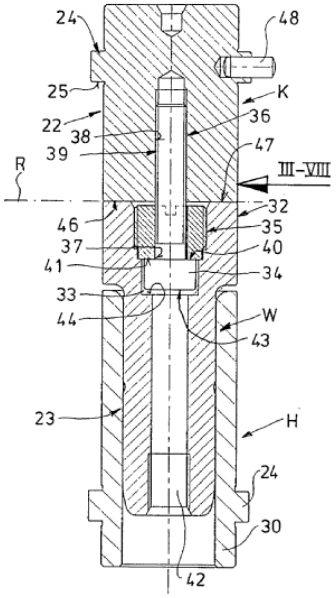

US5776517, cf. centering means 10

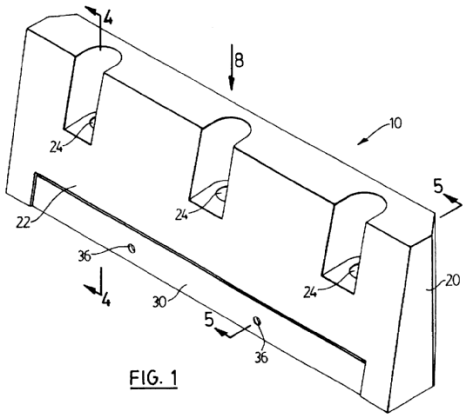

FIG. 1

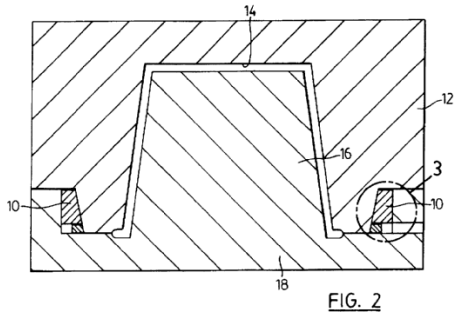

FIG. 2

References

Informative references

Attention is drawn to the following places, which may be of interest for search:

Centering mould halves or parts in general	B29C 33/303

B29C 45/2608

{Mould seals}

Definition statement

This place covers:

EP958908, Element 106 is a sealing element.

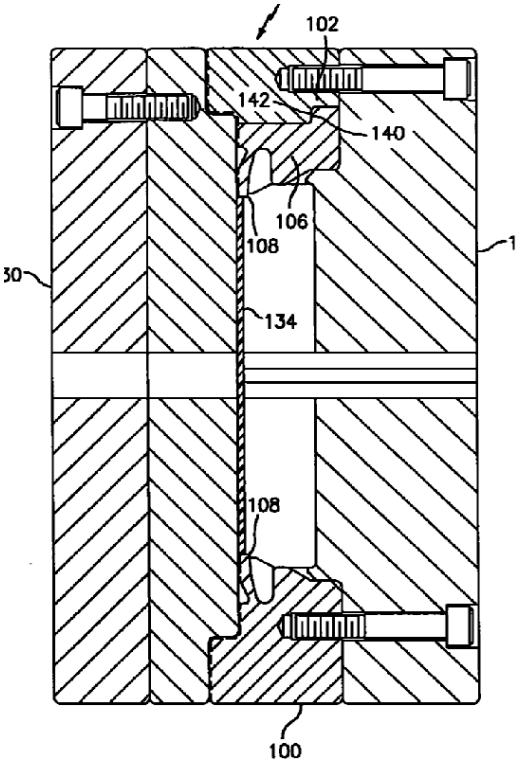

References

Limiting references

This place does not cover:

Applying a sealing means as an insert	B29C 45/14418

Informative references

Attention is drawn to the following places, which may be of interest for search:

Moulds in general provided with sealing means	B29C 33/0038
Compression moulds provided with means to avoid flashes	B29C 43/38
Die seals for pressure casting	B22D 17/2227

B29C 45/261

{having tubular mould cavities}

Definition statement

This place covers:

EP852339 optical connectors, fig 7b, 51,52 = tubular

FIG. 7A

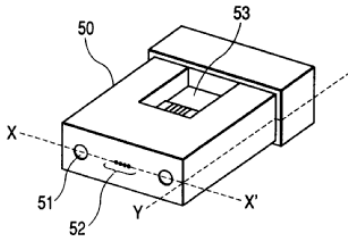

FIG. 7B

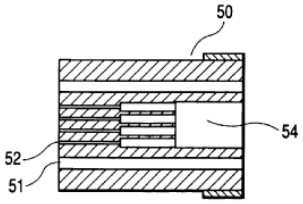

EP501091, fittings, element G in figure 7

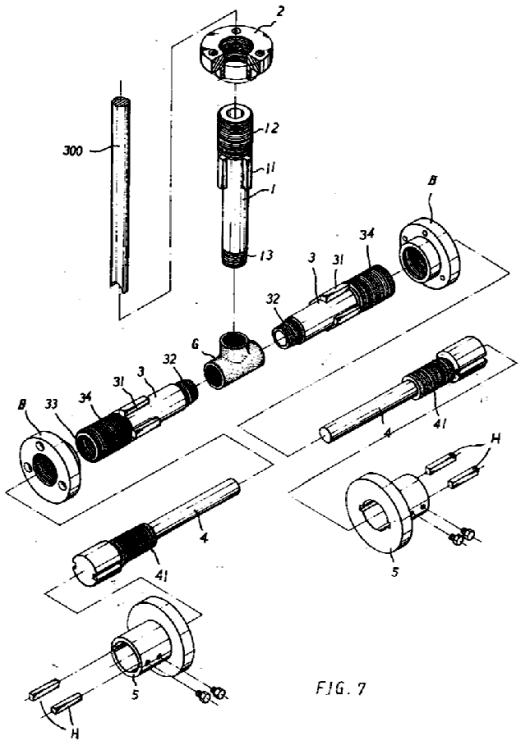

References

Informative references

Attention is drawn to the following places, which may be of interest for search:

Producing pipe or pipe joints	B29D 23/001
Ferrules for optical fibres	G02B 6/3885

Glossary of terms

In this place, the following terms or expressions are used with the meaning indicated:

Tubular	refers to being open at both ends and hollow

B29C 45/2612

{for manufacturing tubular articles with an annular groove}

Definition statement

This place covers:

DE2633050 see element 13, fig 2.

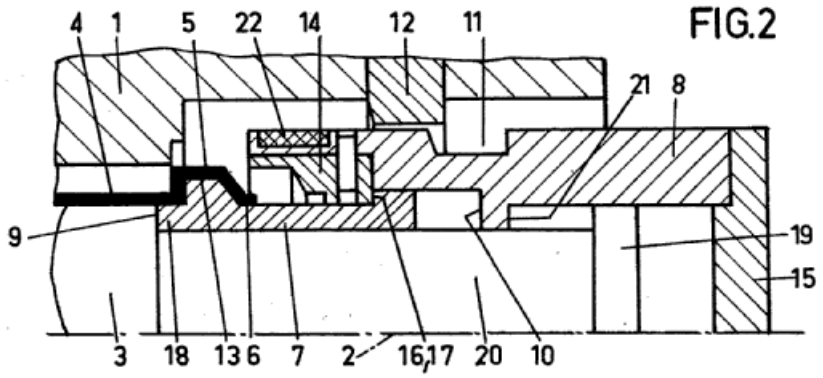

GB2145364

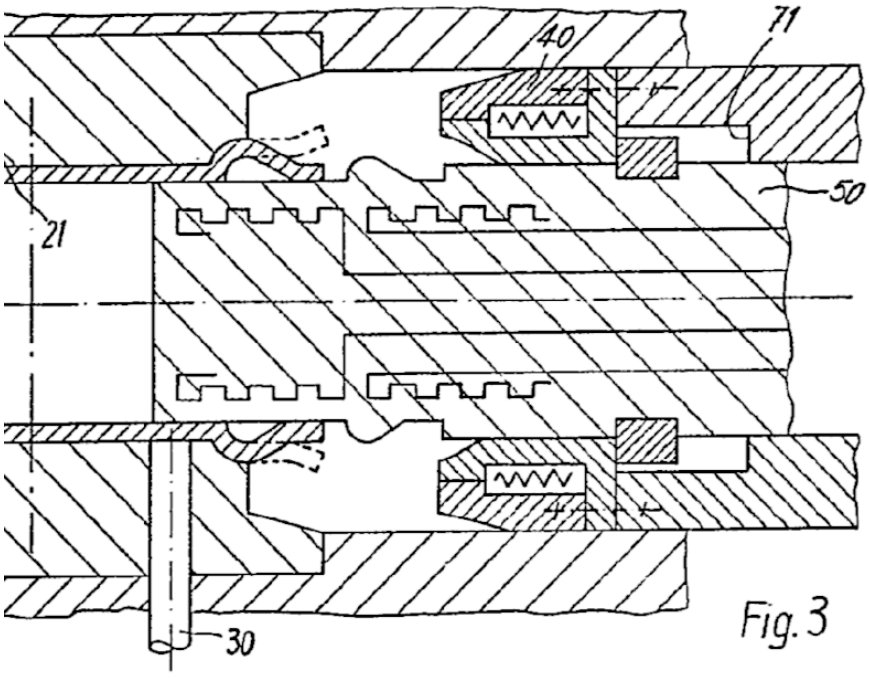

DE2757756

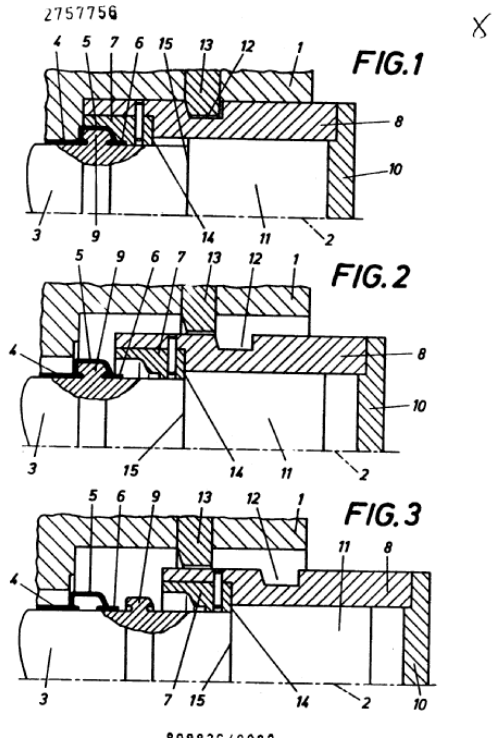

B29C 45/2616

{having annular mould cavities}

References

Informative references

Attention is drawn to the following places, which may be of interest for search:

Producing tyres or parts thereof by injection moulding	B29D 30/0678

B29C 45/262

{provided with unscrewing drive means (unscrewing means outside the mould B29C 45/178)}

References

Informative references

Attention is drawn to the following places, which may be of interest for search:

Moulds in general for stripping articles from a mould core using a rotating movement: to unscrew articles	B29C 33/446
Discharging articles by stripping from a mould core using a rotating movement: to unscrew articles	B29C 37/0021

B29C 45/2624

{provided with a multiplicity of wall-like cavities connected to a common cavity, e.g. for battery cases}

References

Informative references

Attention is drawn to the following places, which may be of interest for search:

Producing casings, e.g. accumulator cases	B29D 99/006

B29C 45/2626

{provided with a multiplicity of narrow cavities connected to a common cavity, e.g. for brushes, combs}

References

Informative references

Attention is drawn to the following places, which may be of interest for search:

Moulds with deep narrow cavities in general	B29C 33/0027
Making of toothbrushes	A46D 3/005, A46B 1/00

B29C 45/2628

{with mould parts forming holes in or through the moulded article, e.g. for bearing cages}

References

Informative references

Attention is drawn to the following places, which may be of interest for search:

Moulds for making articles with holes in general	B29C 33/0033

B29C 45/263

{with mould wall parts provided with fine grooves or impressions, e.g. for record discs}

References

Informative references

Attention is drawn to the following places, which may be of interest for search:

Producing phonographic records	B29D 17/002
Preparing and using a stamper for the manufacture of records or carriers	G11B 7/263
Record carriers characterised by their resin composition	G11B 23/0092

B29C 45/2632

{Stampers; Mountings thereof}

Definition statement

This place covers:

the mounting of stamper layers

B29C 45/2642

{Heating or cooling means therefor}

References

Informative references

Attention is drawn to the following places, which may be of interest for search:

Heating or cooling the injection mould in general	B29C 45/73

B29C 45/2673

{with exchangeable mould parts, e.g. cassette moulds (B29C 45/1756 takes precedence)}

References

Informative references

Attention is drawn to the following places, which may be of interest for search:

Moulds with exchangeable mould parts in general:	B29C 33/306
Adjustable moulds in general:	B29C 33/308
Adjustable moulds for injection moulding:	B29C 45/376

B29C 45/27

Sprue channels {; Runner channels or runner nozzles}

Definition statement

This place covers:

Sprue bushings, runner nozzles, runner channels

References

Limiting references

This place does not cover:

Runner nozzles for multi-component injection moulding	B29C 45/1603

Informative references

Attention is drawn to the following places, which may be of interest for search:

Machine nozzles (i.e. the nozzles injecting the material into the mould)	B29C 45/20

B29C 45/2701

{Details not specific to hot or cold runner channels (B29C 45/2725 takes precedence)}

References

Informative references

Attention is drawn to the following places, which may be of interest for search:

Material feeding channels in general	B29C 33/0061

B29C 45/2703

{Means for controlling the runner flow, e.g. runner switches, adjustable runners or gates}

Definition statement

This place covers:

e.g. rotatable sprue bushings

B29C 45/2708

{Gates (B29C 45/2703 takes precedence)}

References

Informative references

Attention is drawn to the following places, which may be of interest for search:

Mould filling gates in general	B29C 33/0077

Glossary of terms

In this place, the following terms or expressions are used with the meaning indicated:

gate	the mould part that connects the runner with the cavity or cavity entrance.

B29C 45/2735

{for non-coaxial gates, e.g. for edge gates}

Definition statement

This place covers:

Side gates

B29C 45/2806

{consisting of needle valve systems (B29C 45/2896 takes precedence)}

References

Informative references

Attention is drawn to the following places, which may be of interest for search:

Needle valves in spray nozzles in general	B05B 1/3046

B29C 45/32

having several axially spaced mould cavities {, i.e. for making several separated articles}

Definition statement

This place covers:

Stack moulds

References

Informative references

Attention is drawn to the following places, which may be of interest for search:

Stack moulds in general	B29C 33/0088
Presses having several platens arranged one above the other	B30B 7/02

B29C 45/34

having venting means

Definition statement

This place covers:

E.g. moulding in a vacuum environment

References

Informative references

Attention is drawn to the following places, which may be of interest for search:

Moulds with incorporated venting means in general	B29C 33/10
Moulding using vacuum in general	B29C 2791/006
Venting means for metal casting moulds	B22D 17/145

B29C 45/37

Mould cavity walls {, i.e. the inner surface forming the mould cavity, e.g. linings}

Definition statement

This place covers:

Mould cavity wall materials

References

Informative references

Attention is drawn to the following places, which may be of interest for search:

Mould coatings in general	B29C 33/56

B29C 45/372

{provided with means for marking or patterning, e.g. numbering articles}

Definition statement

This place covers:

Moulds walls provided with a surface roughness

References

Informative references

Attention is drawn to the following places, which may be of interest for search:

Moulds provided with means for marking or patterning in general	B29C 33/424

B29C 45/374

{for displaying altering indicia, e.g. data, numbers}

Definition statement

This place covers:

Mould cavity wall indicator means which are able to be adjusted in the mould.

References

Limiting references

This place does not cover:

Indicators by exchanging parts of the cavity wall	B29C 45/2673, B29C 45/372

B29C 45/376

{adjustable (B29C 45/374 takes precedence)}

Definition statement

This place covers:

Changing of the cavity configuration, e.g. by mould parts that are movable

B29C 45/38

Cutting-off equipment for sprues or ingates

References

Informative references

Attention is drawn to the following places, which may be of interest for search:

Cutting-off sprues in pressure die casting	B22D 17/2076
Cutting-off surplus material in metal casting	B22D 31/00

B29C 45/40

Removing or ejecting moulded articles

Definition statement

This place covers:

The process of the ejection

EP92916

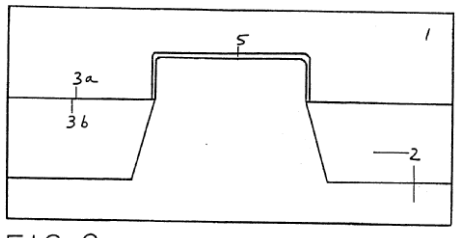

FIG 2

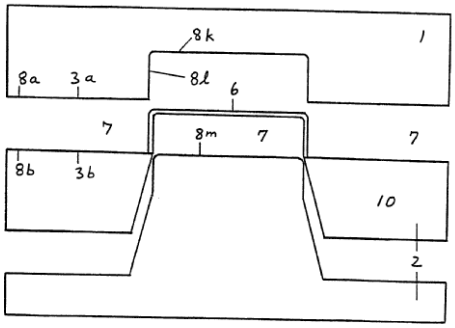

FIG 3

Mechanical details of the ejector (covered by B29C 45/4005 and B29C 45/401)

References

Informative references

Attention is drawn to the following places, which may be of interest for search:

Moulds with means for removing or ejecting articles in general	B29C 33/44
Discharging articles from the mould in general	B29C 37/0003
Ejecting castings in pressure die casting	B22D 17/2236

B29C 45/4005

{Ejector constructions; Ejector operating mechanisms (B29C 45/44 takes precedence)}

Definition statement

This place covers:

EP503068 fig 1, construction of the drive of the ejection unit.

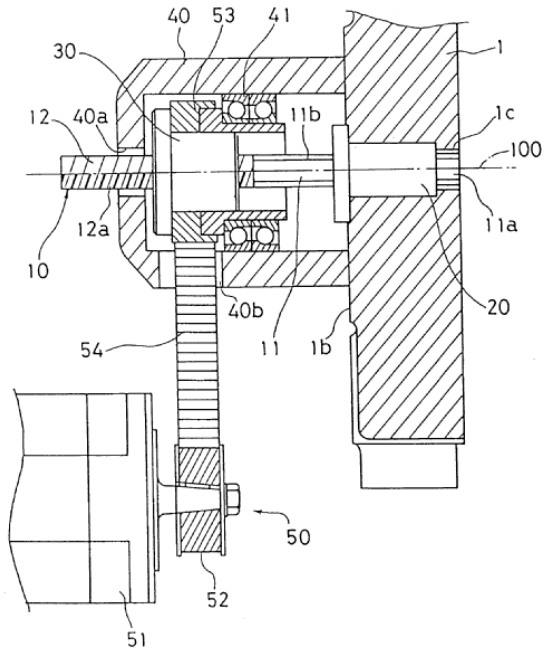

References

Informative references

Attention is drawn to the following places, which may be of interest for search:

Mechanical ejectors of moulds in general	B29C 33/442

B29C 45/401

{Ejector pin constructions or mountings}

Definition statement

This place covers:

WO9819845, fig 3 and 4, sealing means 13 and construction 15 are special features of the pin.

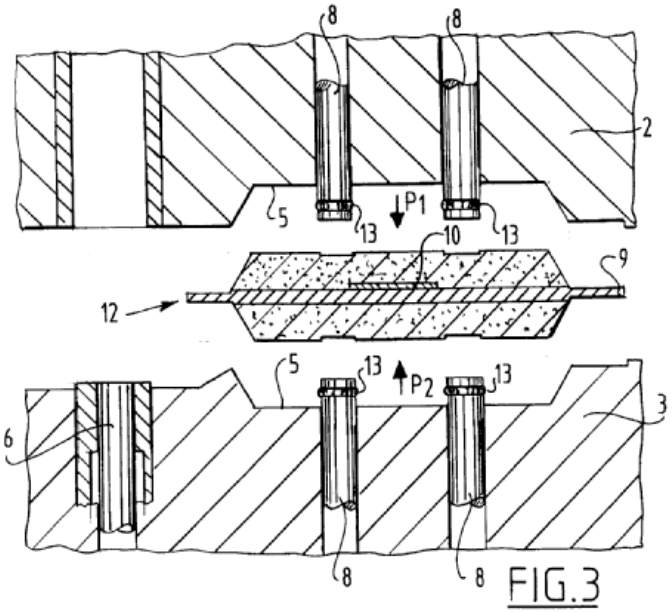

FIG.3

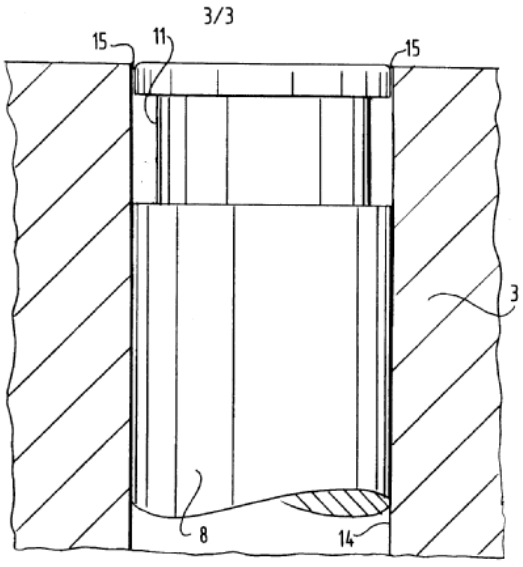

FIG.4

B29C 45/42

using means movable from outside the mould between mould parts {, e.g. robots}

Definition statement

This place covers:

Robots for removing moulded articles

EP218101

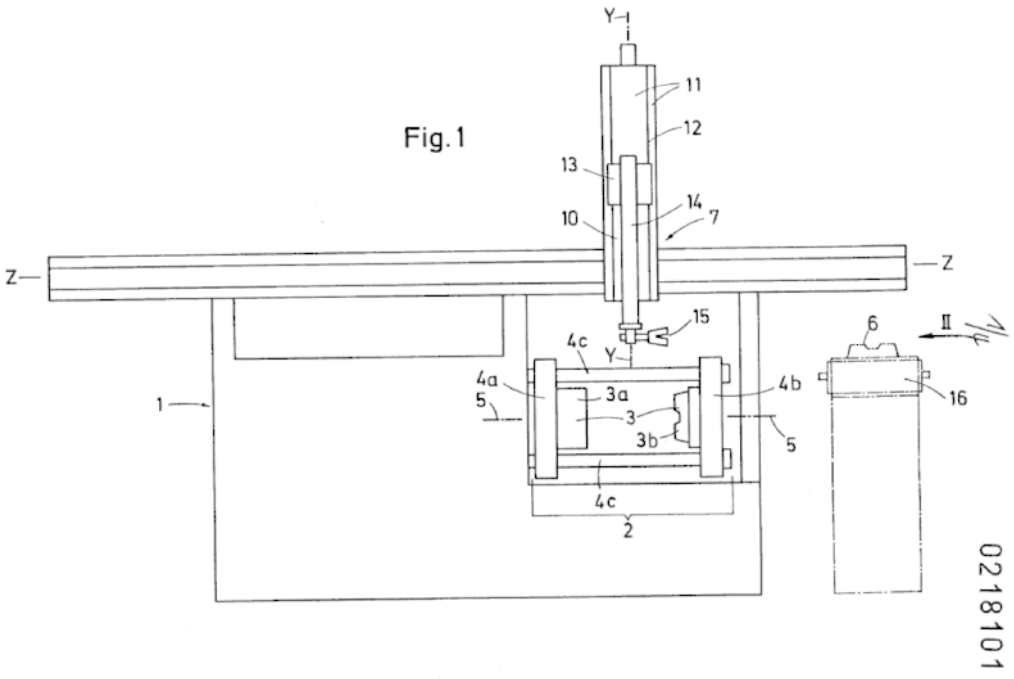

References

Informative references

Attention is drawn to the following places, which may be of interest for search:

Discharging moulded articles by robots in general	B29C 37/0007
Manipulators for evacuating cast pieces in pressure die casting	B22D 17/2084
Robots in general	B25J

B29C 45/4208

{and driven by the movable mould part}

Definition statement

This place covers:

EP837666, the moving mould causes the rack to rotate the pignon to move the robot

FIG.1

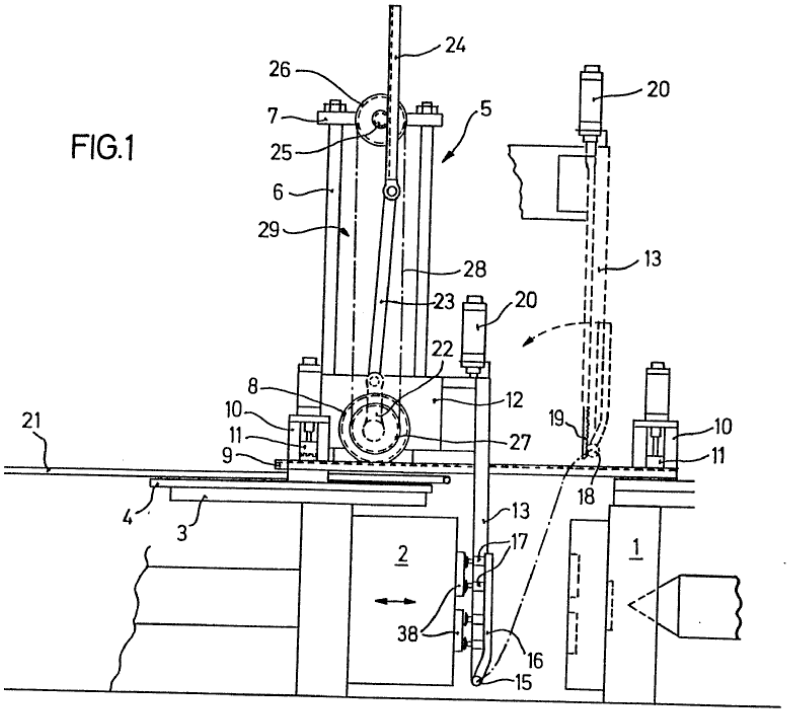

B29C 45/4225

{Take-off members or carriers for the moulded articles, e.g. grippers}

Definition statement

This place covers:

The part of the robot that picks up the moulded article

EP919352

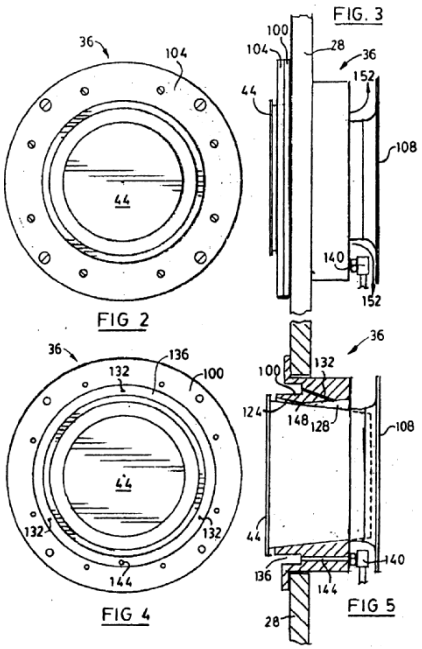

References

Informative references

Attention is drawn to the following places, which may be of interest for search:

Gripping heads of manipulators in general	B25J 15/00
Gripping devices for feeding or discharging articles from a conveyor	B65G 47/90

B29C 45/43

using fluid under pressure

Definition statement

This place covers:

US4438065, fig 5 & 6, air through channel 70 & 75

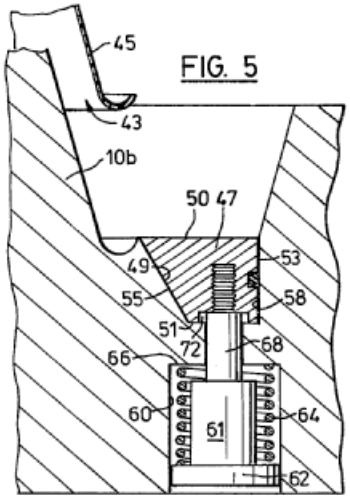

FIG. 5

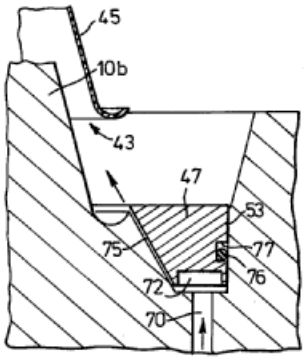

FIG. 6

US3892512, fig 4 & 5

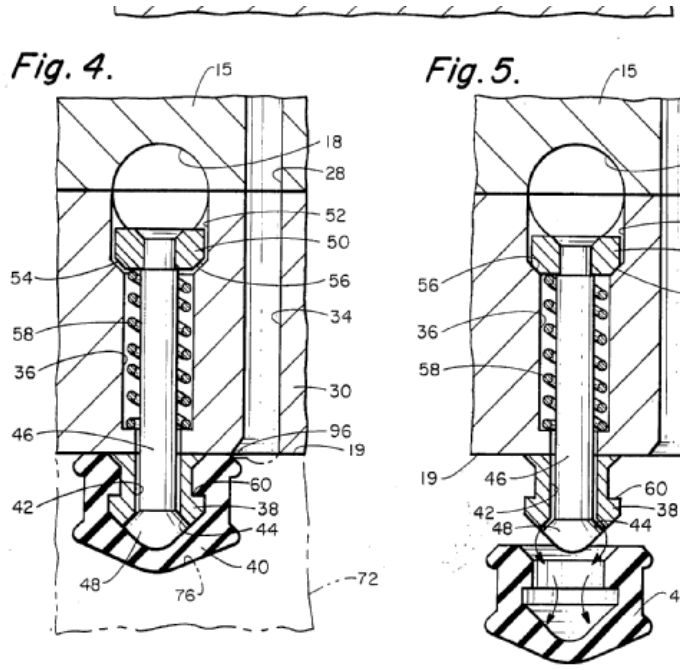

References

Informative references

Attention is drawn to the following places, which may be of interest for search:

Using fluid pressure to remove articles from the mould in general	B29C 33/46

B29C 45/435

{introduced between a mould core and a hollow resilient undercut article, e.g. bellows}

Definition statement

This place covers:

EP818297, fig 5

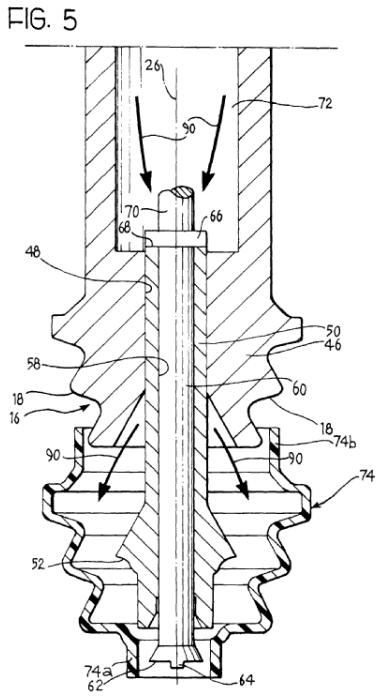

EP100422 fig 1 & 2

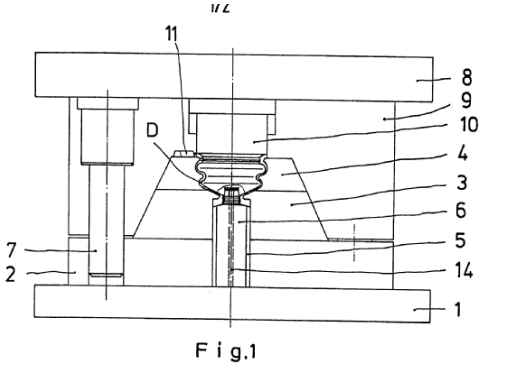

Fig.1

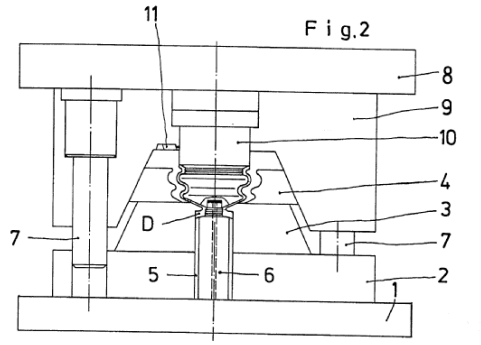

Fig.2

References

Informative references

Attention is drawn to the following places, which may be of interest for search:

Bellows obtained by moulding	B29L 2031/703

B29C 45/44

for undercut articles

Definition statement

This place covers:

EP595491

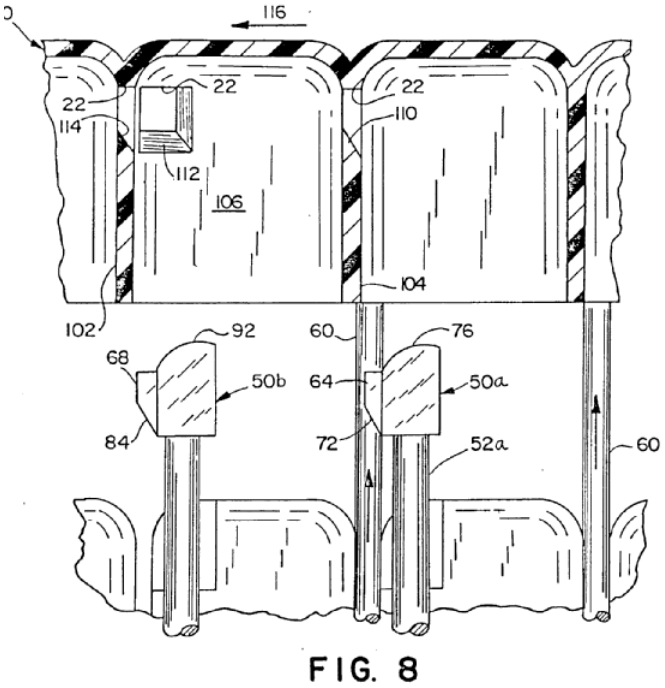

FIG. 8

Glossary of terms

In this place, the following terms or expressions are used with the meaning indicated:

undercut	an opening in a moulded article made by a supplementary mould part which can not move in an axial direction upon mould opening.

B29C 45/4407

{by flexible movement of undercut portions of the articles}

Definition statement

This place covers:

the flexible movement is the UNDERCUT PORTION of the ARTICLE

EP635351, fig 8,9,10 part 24 can move flexible

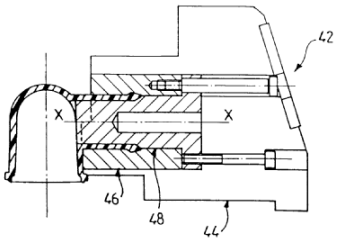

FIG. 8

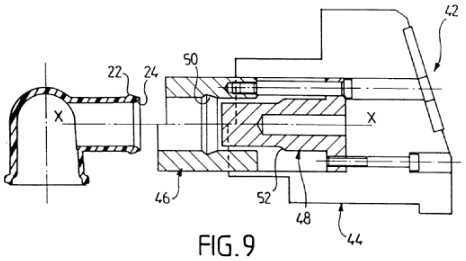

FIG. 9

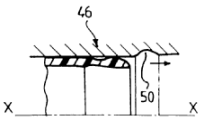

FIG. 10

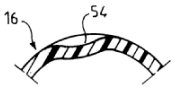

FIG. 11

EP510650, fig 1, undercut 44,/64. fig 2b & 4b core moves and undercut can flex away

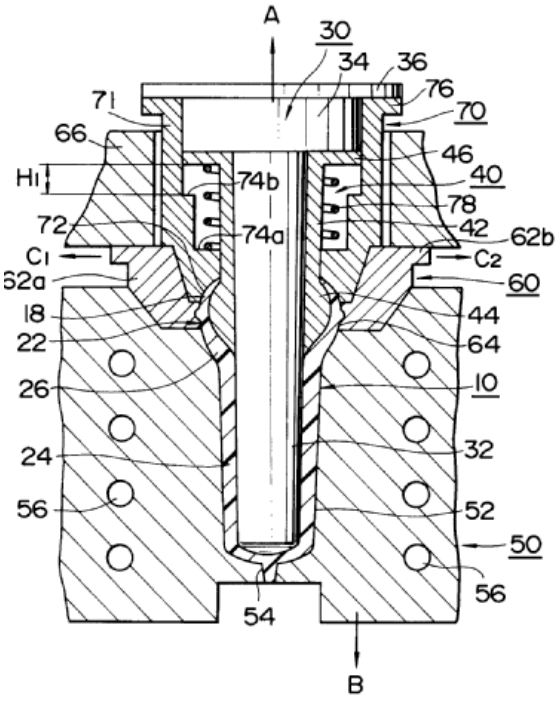

References

Informative references

Attention is drawn to the following places, which may be of interest for search:

Discharging moulded articles from the mould by deforming undercut portions of the article in general	B29C 37/0014

B29C 45/4421

{using expansible or collapsible cores}

Definition statement

This place covers:

moulds comprise usually two types of cores.

US5403179, items 108 and 138 are collapsible, because of the insertable and removable pin.

The movement of the cores is linked to each other.

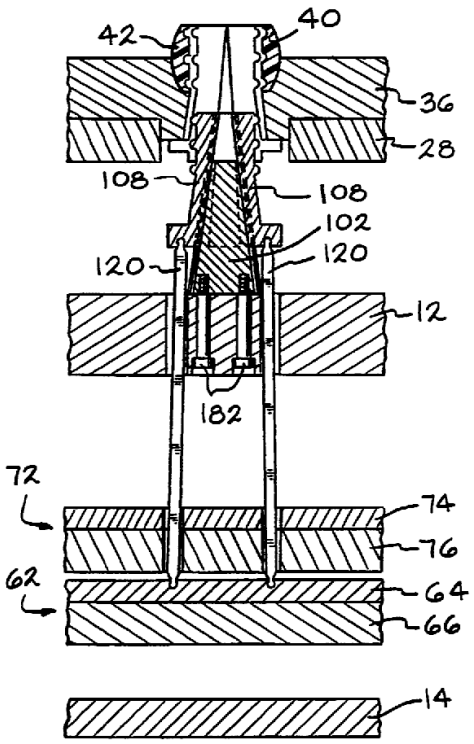

US4286766

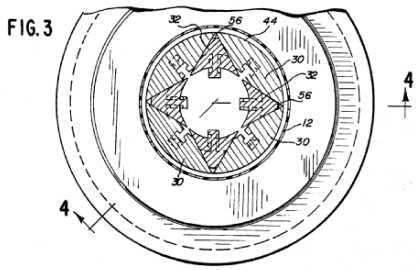

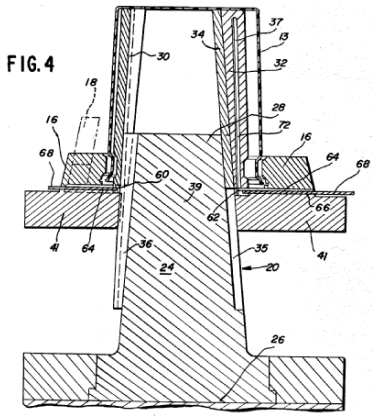

References

Informative references

Attention is drawn to the following places, which may be of interest for search:

Collapsible cores or mandrels for removing or ejecting moulded articles in general	B29C 33/485
Collapsible cores for winding and joining	B29C 53/824

B29C 45/4435

{using inclined, tiltable or flexible undercut forming elements driven by the ejector means}

Definition statement

This place covers:

Only undercut forming element being driven by the ejector means.

Three types of undercut forming elements are present:

Flexible:

EP1201396, fig 4, undercut forming element 3, flexing at 2, driven by 9/10

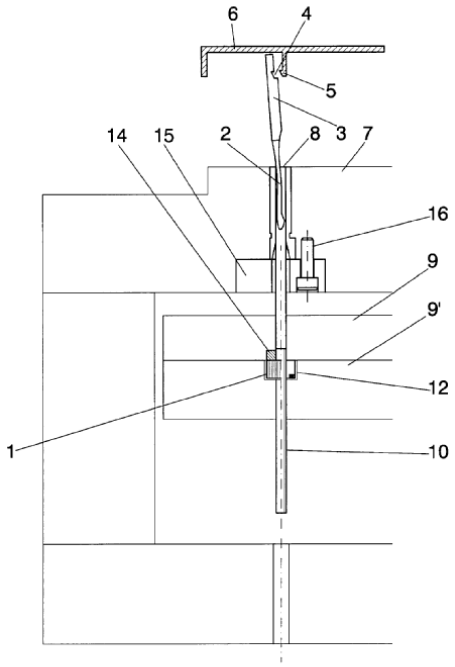

FIG.4

Inclined:

US5551864, inclined element 26 driven by 24

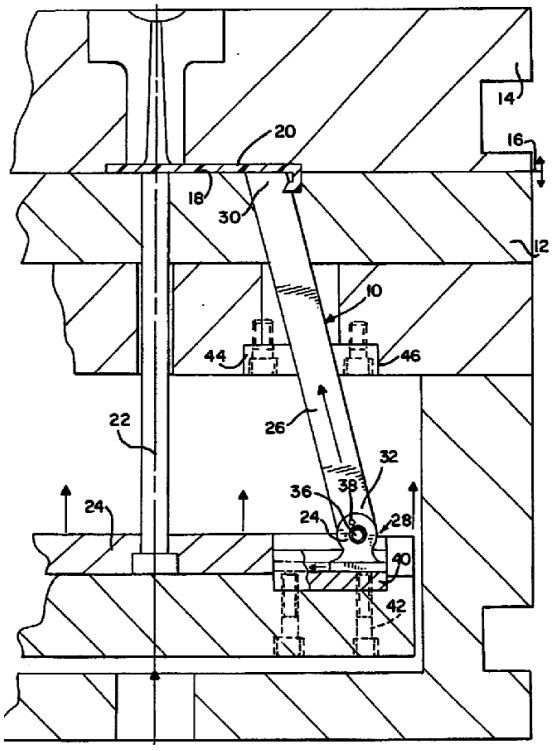

Tiltable (or pivotable),

US5773048, Undercut forming element 94, driven by ejector 46. See hinge 90-92 (fig 1 & 2)

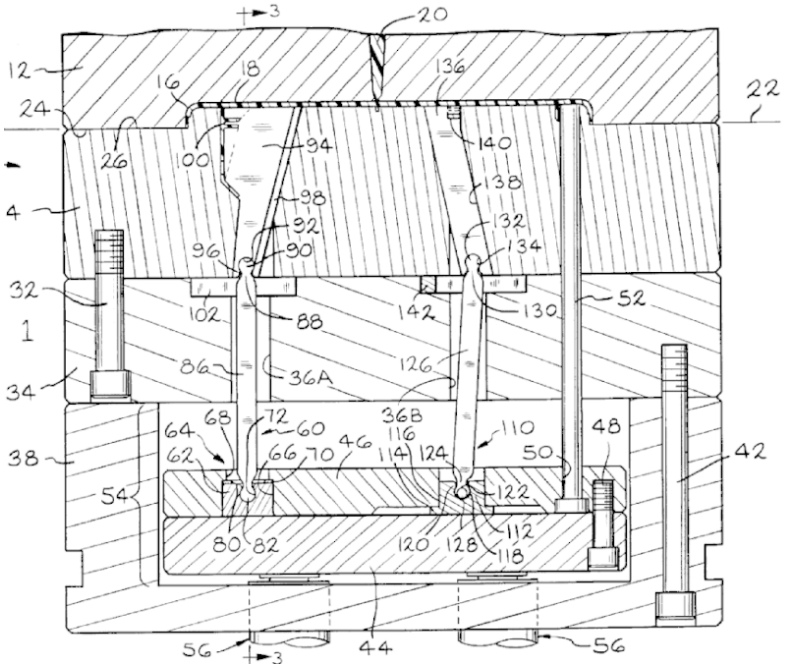

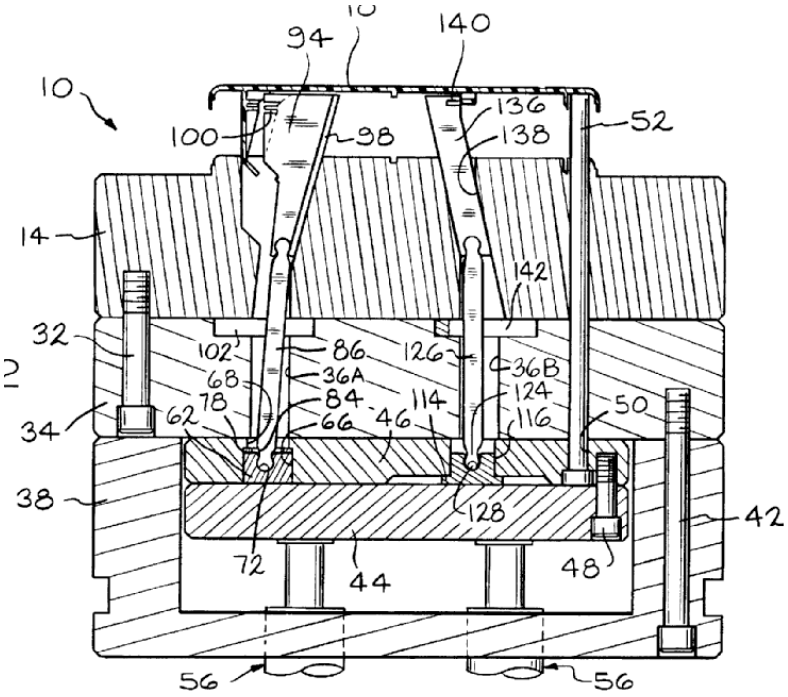

DE19507009, figure 1

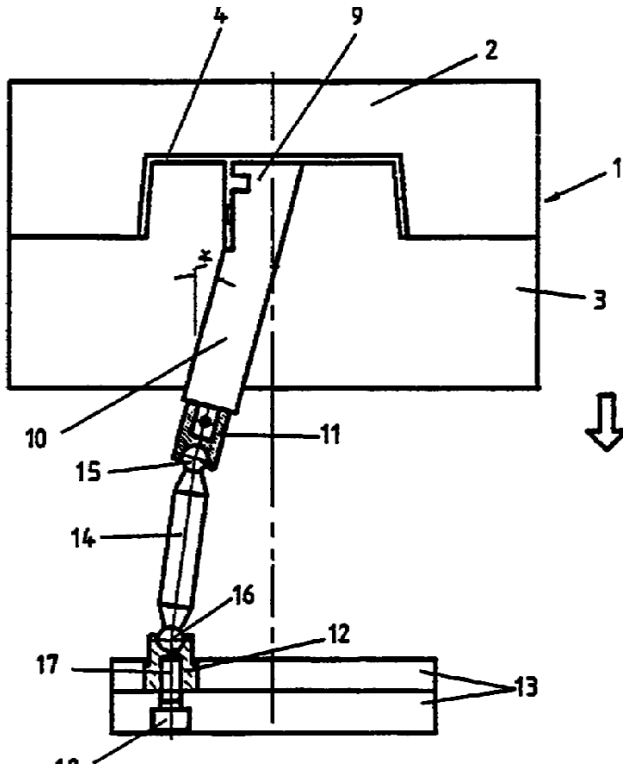

References

Informative references

Attention is drawn to the following places, which may be of interest for search:

Inclined, tiltable or flexible undercut forming elements driven by other means than the ejector	B29C 45/4471

B29C 45/4457

{using fusible, soluble or destructible cores}

Definition statement

This place covers:

Soluble cores, e.g. salt, ice, wax, plastic, metal

EP173447, claim 1, core 17 (fig 1-5)

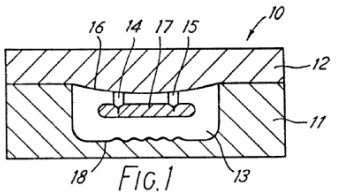

FIG.1

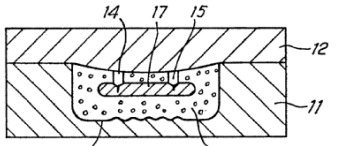

FIG.2

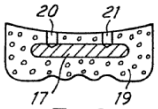

FIG.3

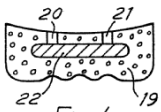

FIG.4

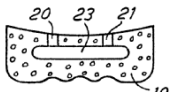

FIG.5

References

Informative references

Attention is drawn to the following places, which may be of interest for search:

Destructible cores to facilitate the removal or ejection of moulded articles in general	B29C 33/448
Soluble cores to facilitate the removal or ejection of moulded articles in general	B29C 33/52

B29C 45/4471

{using flexible or pivotable undercut forming elements (B29C 45/4435 takes precedence)}

Definition statement

This place covers:

EP1223021, fig 2 & 3. The pincers of the head open automatically.

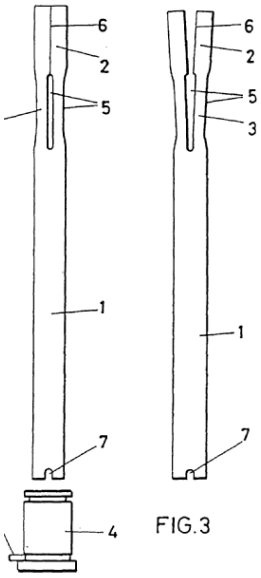

FIG.1



FIG.2

FIG.3

EP421136, pivotable/tiltable. Plastic = 5, part 14/14a pivotable. The outside pivoting movement of 14 is actioned by 16.

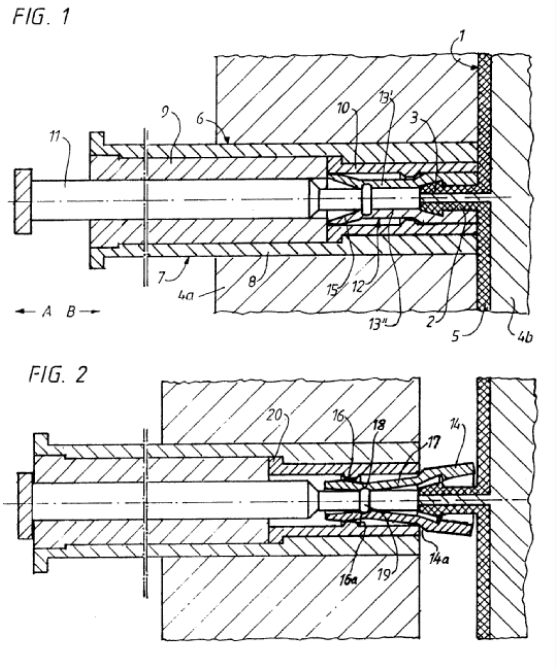

EP738578, fig 5-7, pivotable part 9

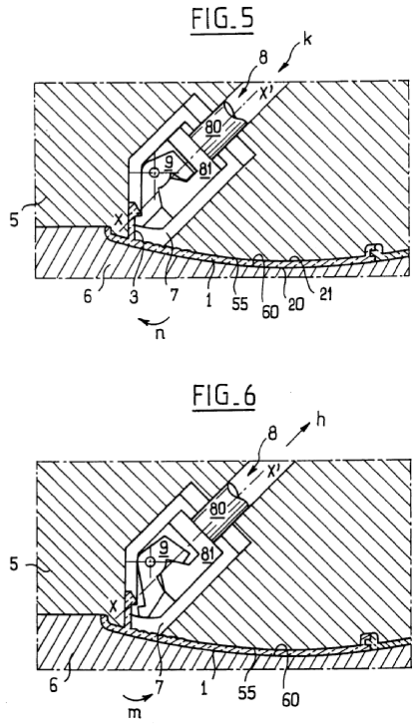

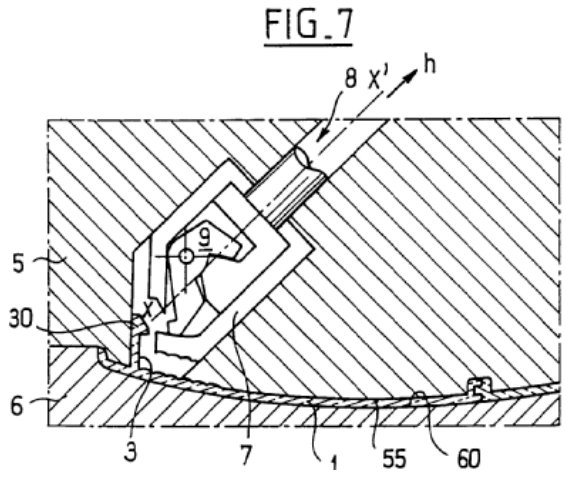

US5630977 fig 1 & 2 (flexible)

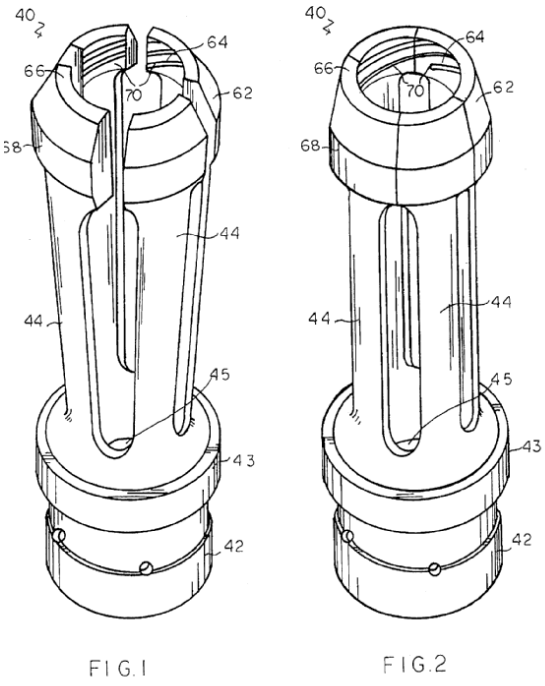

References

Limiting references

This place does not cover:

Pivotable undercut forming elements driven by the ejector	B29C 45/4435

Informative references

Attention is drawn to the following places, which may be of interest for search:

Elastic or flexible cores or mandrels to facilitate the removal of the moulded article	B29C 33/50

B29C 45/4478

{using non-rigid undercut forming elements, e.g. elastic or resilient}

Definition statement

This place covers:

DE2609198, fig 4-6, non-rigid element 24,

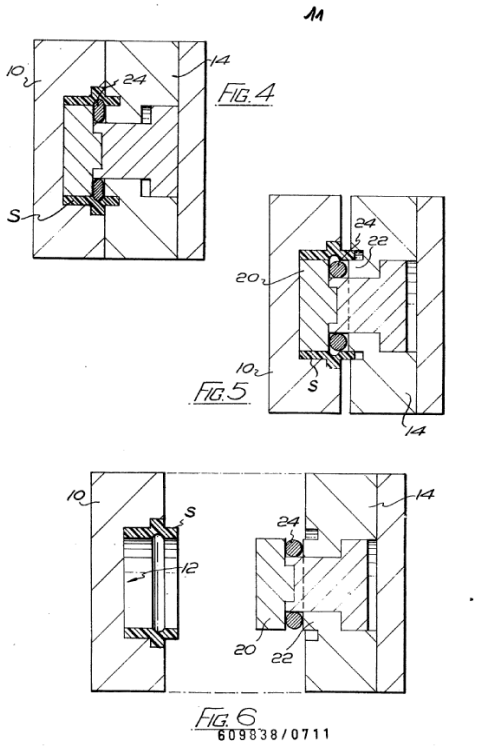

DE2239508, element 20 can act in a flexible way after rod 24 is removed

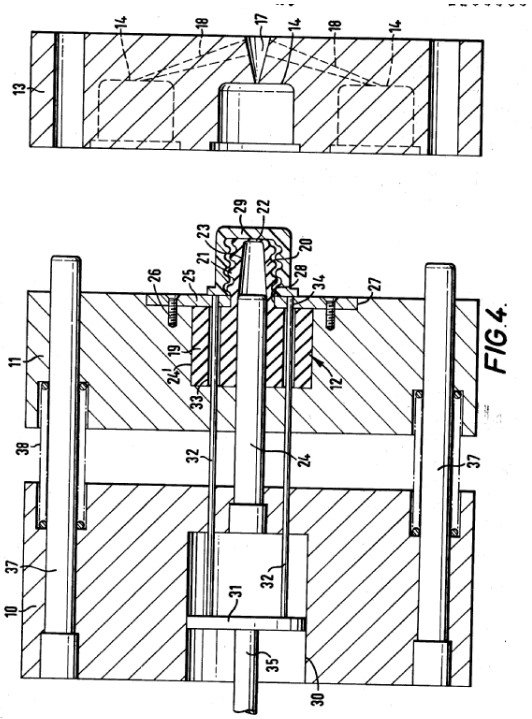

GB2323321, inflatable means 28,

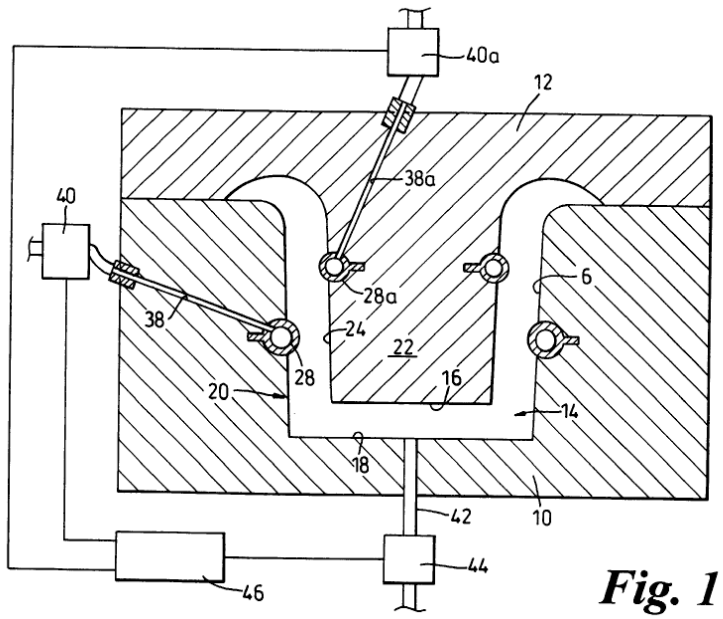

Fig. 1

FR1559371, element 9

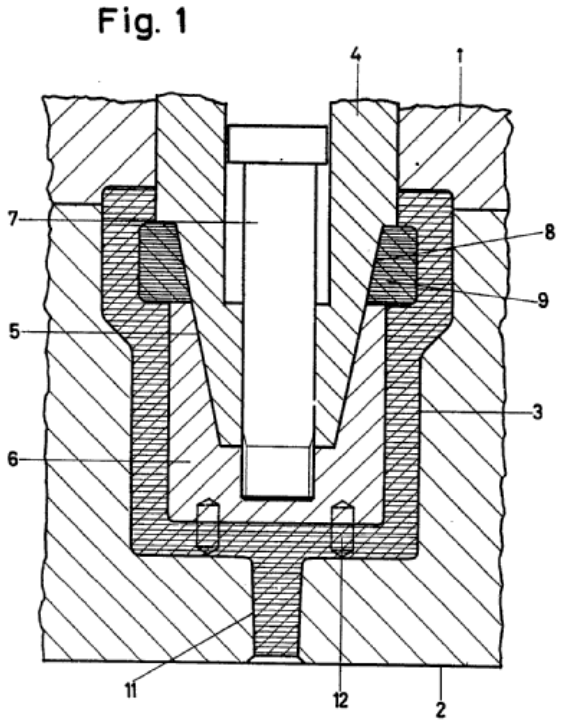

US5080576, element 16

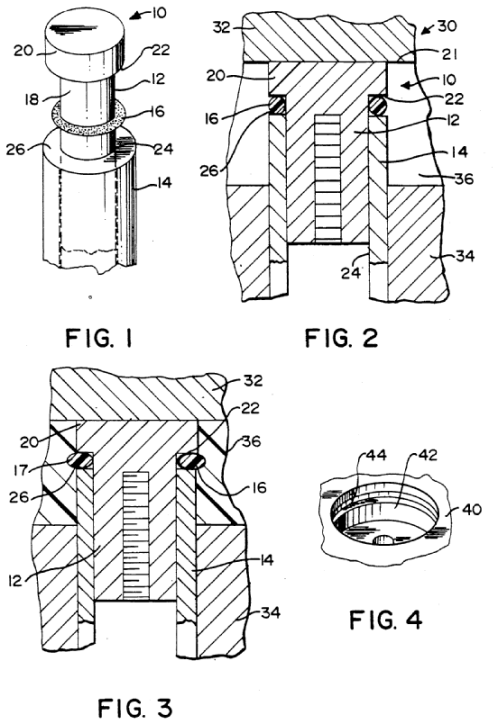

B29C 45/462

{Injection of preformed charges of material}

Definition statement

This place covers:

Injection of lumps, billets, tablets, preforms

References

Informative references

Attention is drawn to the following places, which may be of interest for search:

Feeding of measured doses	B29C 45/1808
Blocks, tablets as preform for moulding	B29K 2105/255

B29C 45/464

{using a rotating plasticising or injection disc}

Definition statement

This place covers:

Grooved conical discs for plasticising or injection

References

Informative references

Attention is drawn to the following places, which may be of interest for search:

Using rollers or discs in extrusion moulding	B29C 48/46

B29C 45/5008

{Drive means therefor}

Definition statement

This place covers:

Drives for axially movable screws by rotation and translation or translation only

References

Limiting references

This place does not cover:

Drives for axially movable screws by rotation only	B29C 45/47

Informative references

Attention is drawn to the following places, which may be of interest for search:

Hydraulic circuits in injection moulding machines as such	B29C 45/82

B29C 45/5605

{Rotatable mould parts}

References

Informative references

Attention is drawn to the following places, which may be of interest for search:

Moulding articles between moving mould surfaces	B29C 67/0003

B29C 2045/5665

{Compression by transversely movable mould parts}

References

Informative references

Attention is drawn to the following places, which may be of interest for search:

Moulds having transversely, e.g. radially, movable mould parts	B29C 45/33

B29C 45/568

{Applying vibrations to the mould parts}

Definition statement

This place covers:

applying vibrations to runners, gates, etc. during moulding.

References

Informative references

Attention is drawn to the following places, which may be of interest for search:

Using vibrations during moulding in general	B29C 2791/008

B29C 45/57

Exerting after-pressure on the moulding material {(B29C 45/174 takes precedence)}

Definition statement

This place covers:

the application of dwell pressure

References

Informative references

Attention is drawn to the following places, which may be of interest for search:

Compensating volume or shape change during moulding in general	B29C 37/005

Applying pressure to compensate volume change during casting	B29C 39/405

B29C 45/572

{using movable mould wall or runner parts}

Definition statement

This place covers:

the application of dwell pressure by means incorporated in the mould, e.g. locally pressurizing pins

EP662383 (mould wall part)

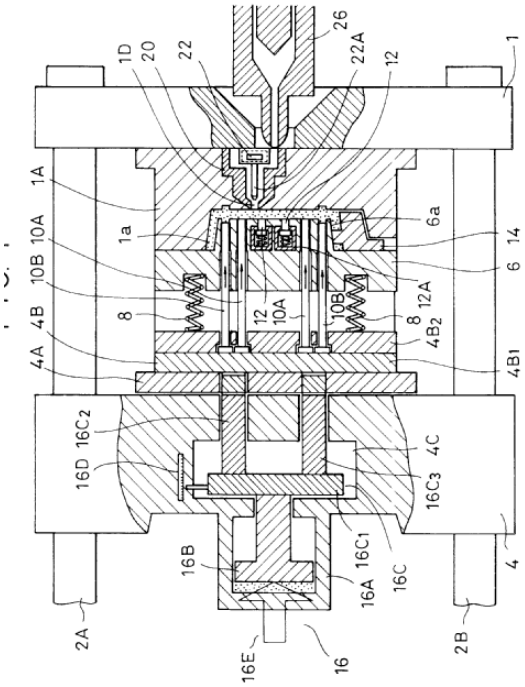

EP1052078 (runner part)

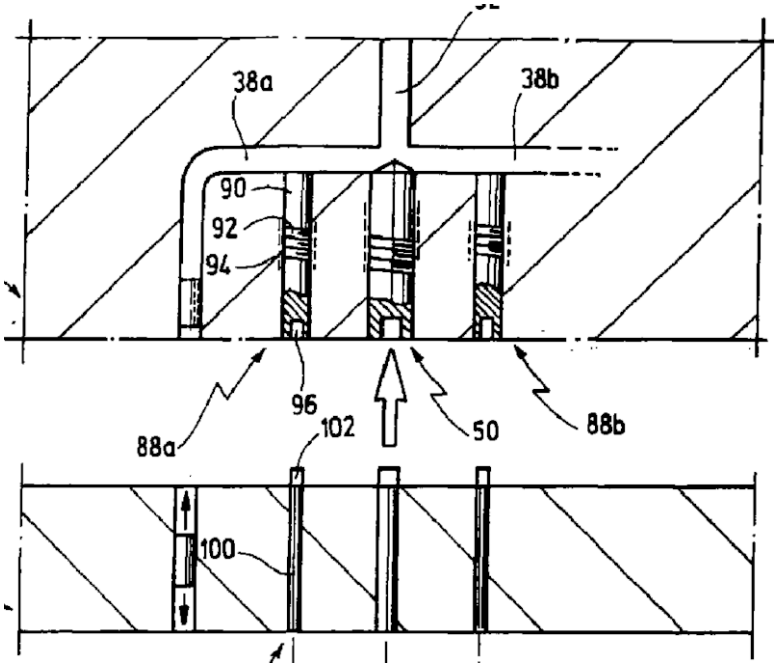

Relationships with other classification places

The difference between injection compression moulding (B29C 45/561) and B29C 45/572 is typically that in injection compression moulding a movable mould half is used for shaping the material in the cavity, while in B29C 45/572 the already shaped material is pressed for compensating the volume change caused by the shrinkage. Pressurizing is typically done locally e.g. by pressurizing pins

It is further noted, that B29C 45/56 comprises a reference out, that B29C 45/572 takes precedence.

B29C 45/58

Details

Definition statement

This place covers:

Details of the injection unit

B29C 45/581

{Devices for influencing the material flow, e.g. "torpedo constructions" or mixing devices}

References

Limiting references

This place does not cover:

Details of the screw	B29C 45/60
Heating or cooling of the injection unit	B29C 45/72

Informative references

Attention is drawn to the following places, which may be of interest for search:

Mixing devices in extrusion moulding	B29C 48/36
Extruder like static flow mixers in general	B01F 25/434

B29C 45/585

{Vibration means for the injection unit or parts thereof}

Definition statement

This place covers:

Vibrating screws or plungers

References

Informative references

Attention is drawn to the following places, which may be of interest for search:

Applying vibration to mould parts	B29C 45/568
Applying vibrations during extrusion moulding	B29C 48/14
Applying vibrations during moulding in general	B29C 2791/008
Applying vibrations during extrusion moulding of ceramics	B28B 3/205

B29C 45/586

{Injection or transfer plungers}

References

Informative references

Attention is drawn to the following places, which may be of interest for search:

Injection pistons for pressure die casting	B22D 17/203

B29C 45/60

Screws

Definition statement

This place covers:

mixing parts connected to the screw

References

Informative references

Attention is drawn to the following places, which may be of interest for search:

Screws in extrusion moulding:	B29C 48/505

B29C 45/62

Barrels or cylinders

Definition statement

This place covers:

Also transfer pots

References

Informative references

Attention is drawn to the following places, which may be of interest for search:

Details of extruder barrels or cylinders	B29C 48/68
Construction of extruder barrels	B29C 48/6801

B29C 45/63

Venting or degassing means

References

Informative references

Attention is drawn to the following places, which may be of interest for search:

Venting or degassing means in extrusion moulding	B29C 48/76

B29C 45/64

Mould opening, closing or clamping devices {(combined with means for plasticising or homogenising B29C 45/70)}

Definition statement

This place covers:

Mechanical, hydraulic and hydro-mechanical opening, closing & clamping means. For these aspects subgroups are present.

The remaining scope of B29C 45/64 is small, e.g. magnetic, piezoelectric, magnetostrictive means, using shape memory alloy.

DE10053424: linear motors L1 & L2

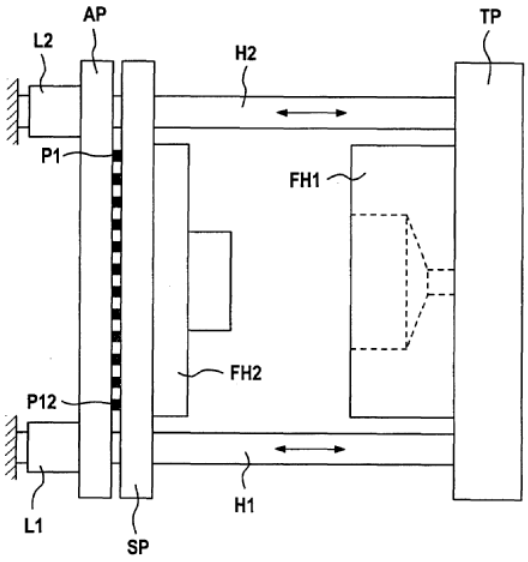

DE4336572, magnetostrictive elements (13)

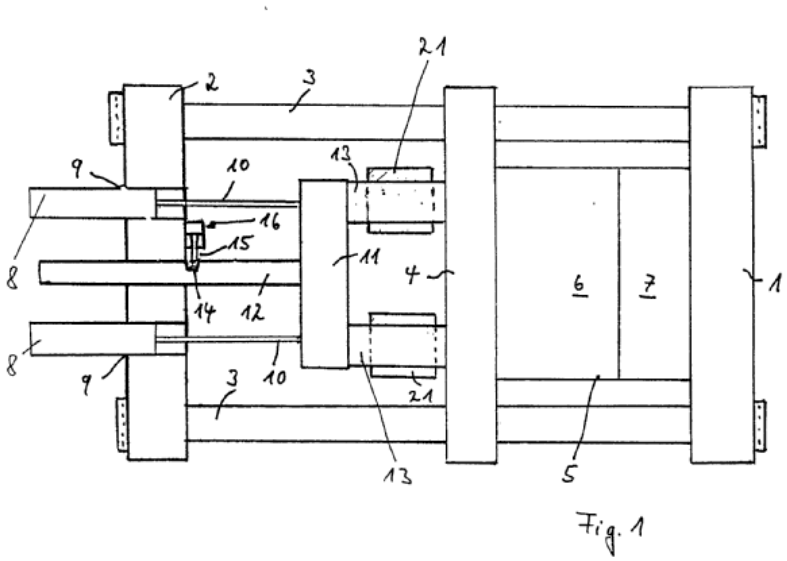

Fig. 1

DE3715161, electromagnet 12

Fig. 2

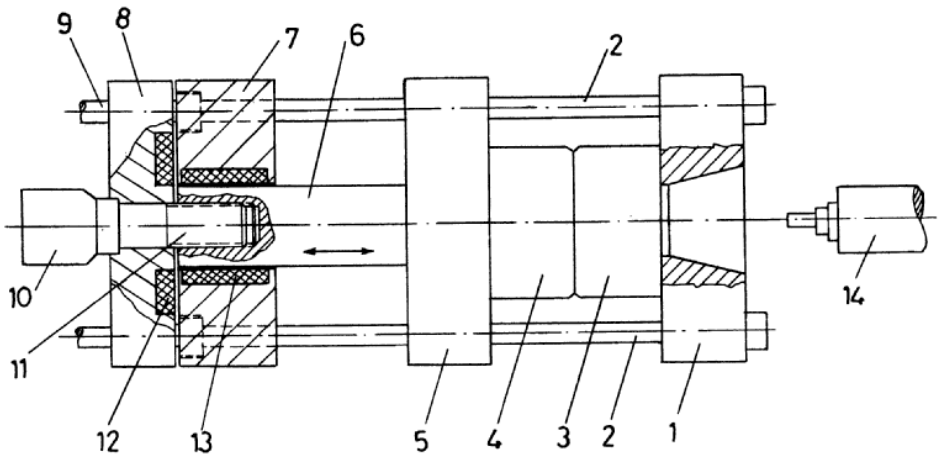

ORIGINAL INSPECTED

EP272138, claim 1, elongation of the tie-bar by energy storage.

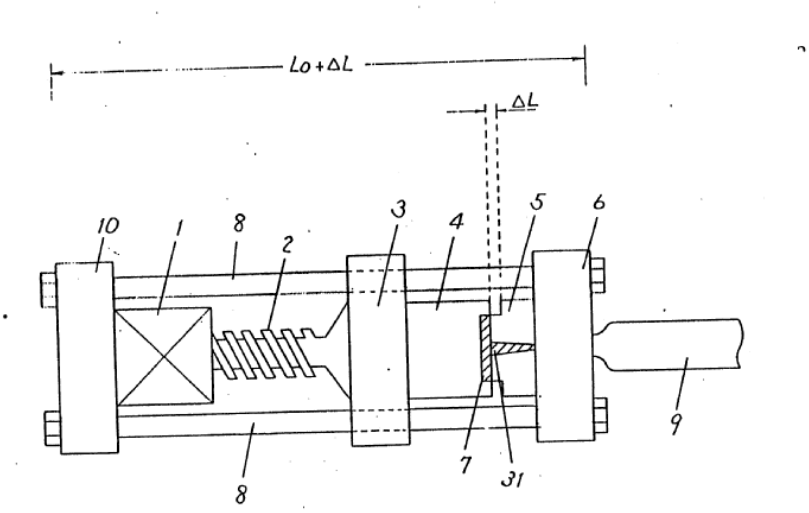

FIG. 4

EP807508

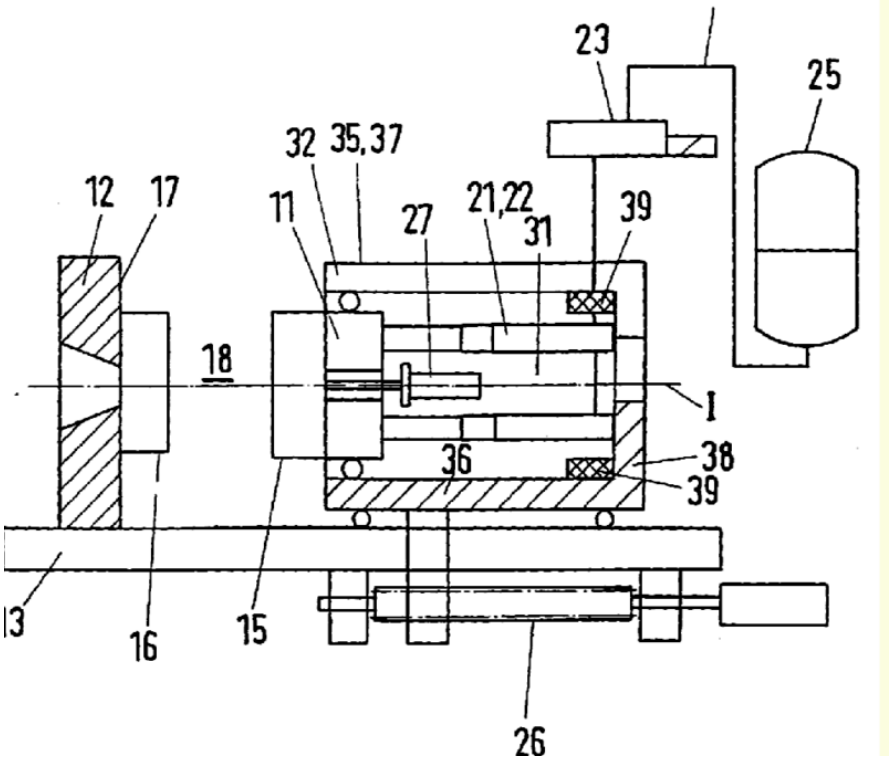

B29C 45/641

{Clamping devices using means for straddling or interconnecting the mould halves, e.g. jaws, straps, latches}

Definition statement

This place covers:

Clamping devices applicable to moulds which are ALREADY CLOSED.

EP1214999, fig 1, stradling means 9

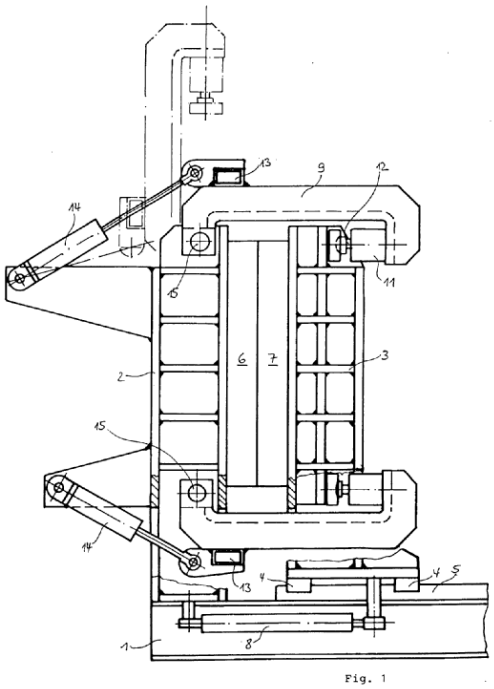

EP420098, stradling means 7b

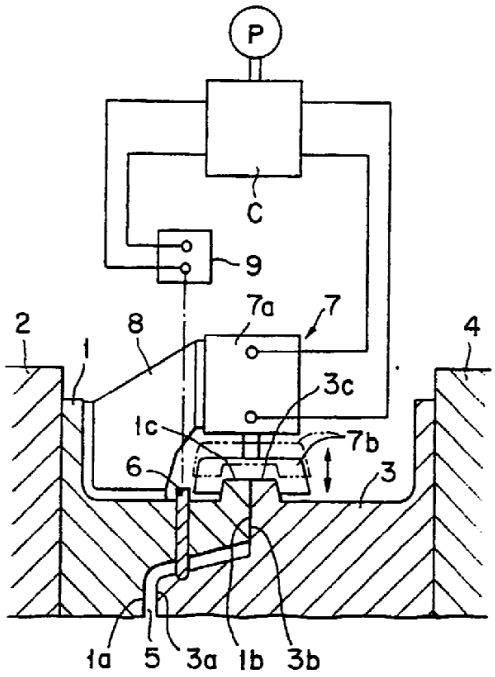

FIG. 1

EP0209413, locking means 11 after closing

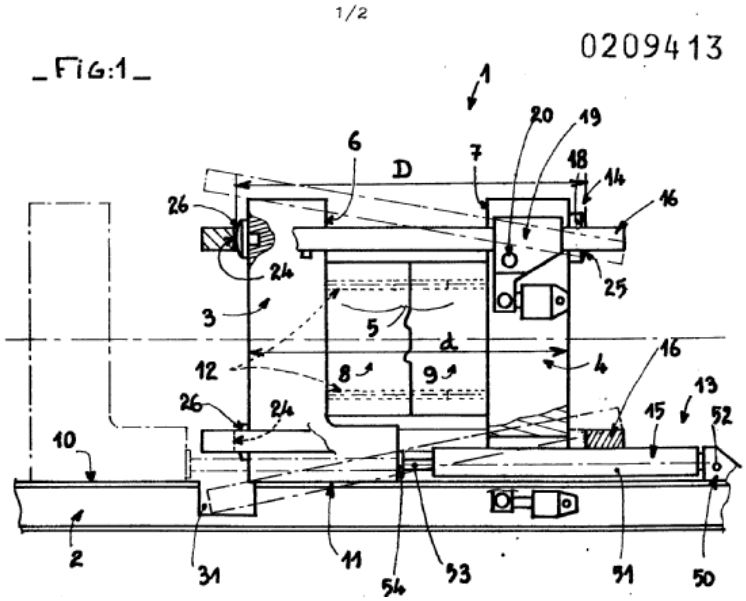

WO0121378, stradling means 13

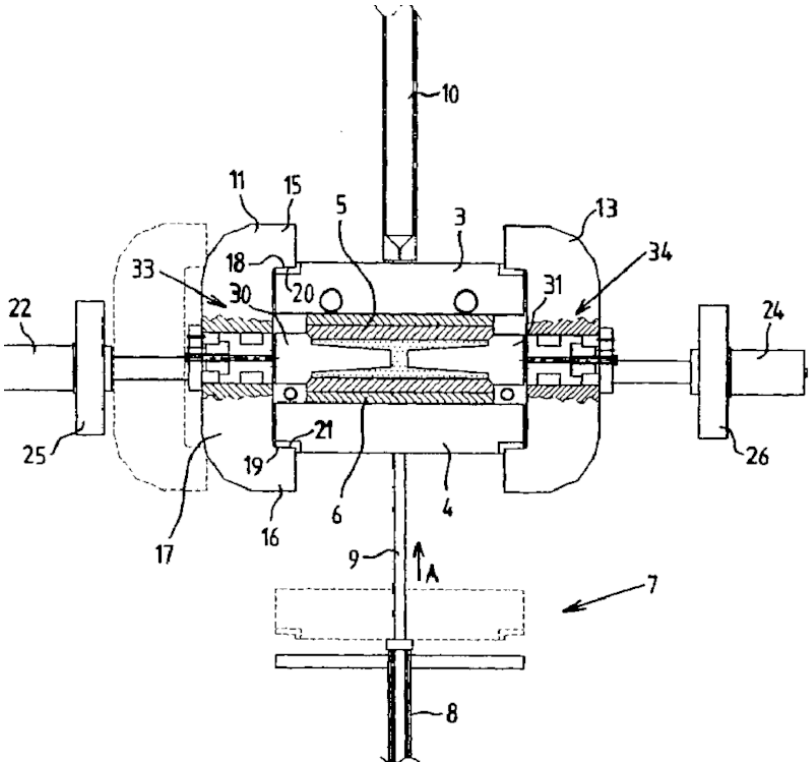

WO9942275, mould halves 26/62 clamped by 10 (fig 2)

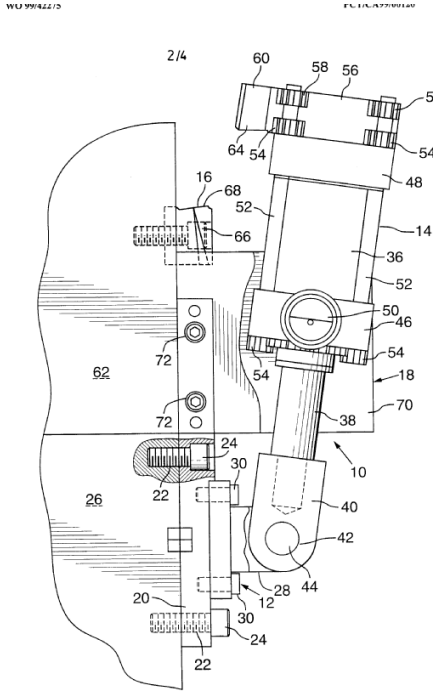

FIG.2

SUBSTITUTE SHEET (RULE 26)

References

Informative references

Attention is drawn to the following places, which may be of interest for search:

Clamping means operating on closed or nearly closed mould parts, the clamping means being independently movable of the opening or closing means in general	B29C 33/202

B29C 45/66

mechanical

Definition statement

This place covers:

Mechanical means for opening closing and clamping. A motor for driving the mechanical means can only be electric or servo but not hydraulic.

EP645228 fig 1 (note: this is not a toggle, then it should have been driven at point 18, it is driven at 16)

FIG. 1

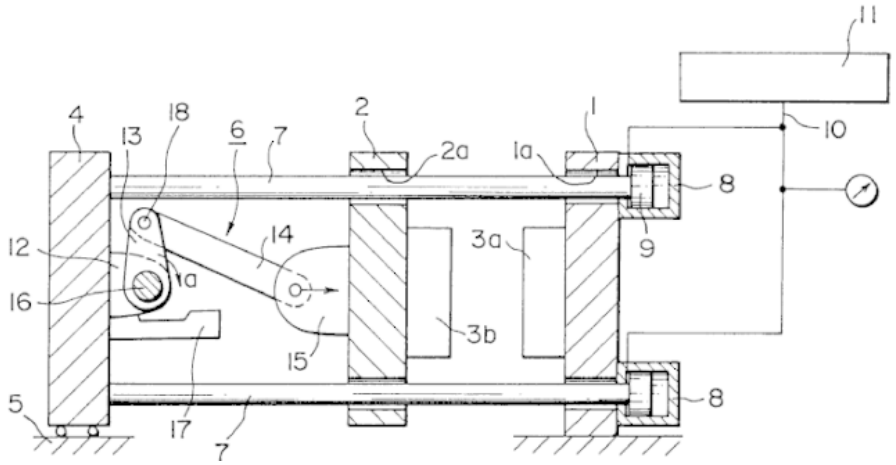

EP627577 lever

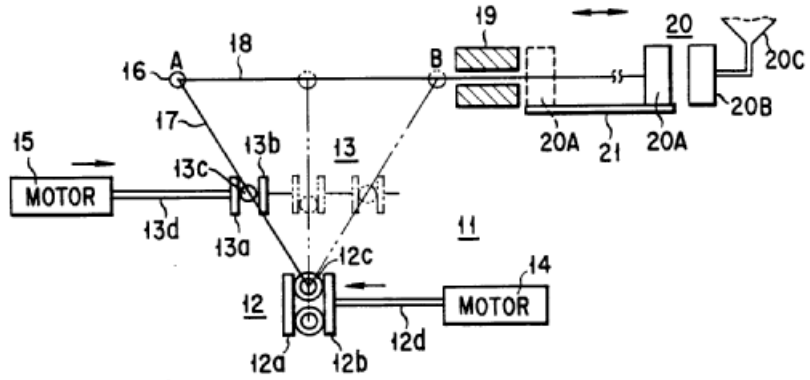

FIG. 1

EP427438 fig 2, pignon/rack 11/12

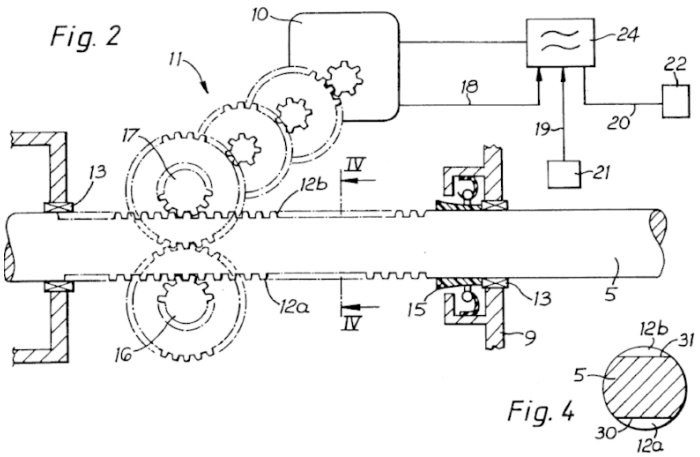

EP386233 crank mechanism fig 1a,b,c

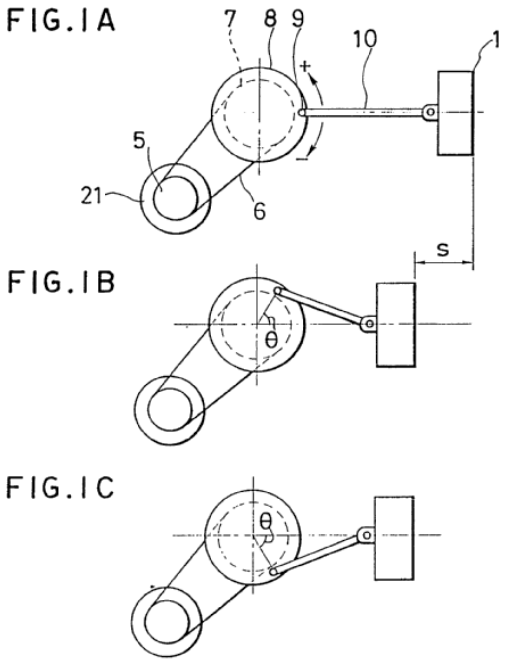

EP381770 40,50 ball nut & screw mechanism.

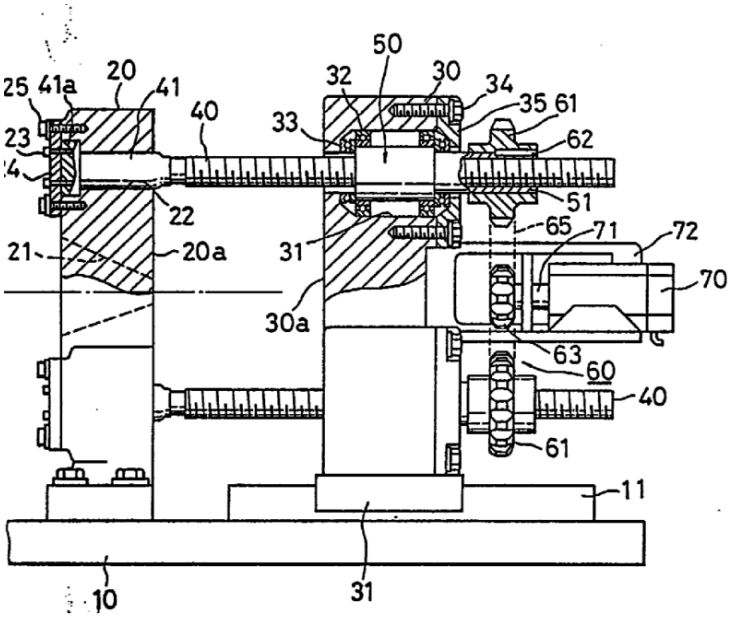

Examples for cranks and excentrics as mechanical opening, closing and clamping means are taken from the field of presses (B30B) for reference purpose.

Cranks:

US5544577, driven crank axis is 14, 6 is like the mould

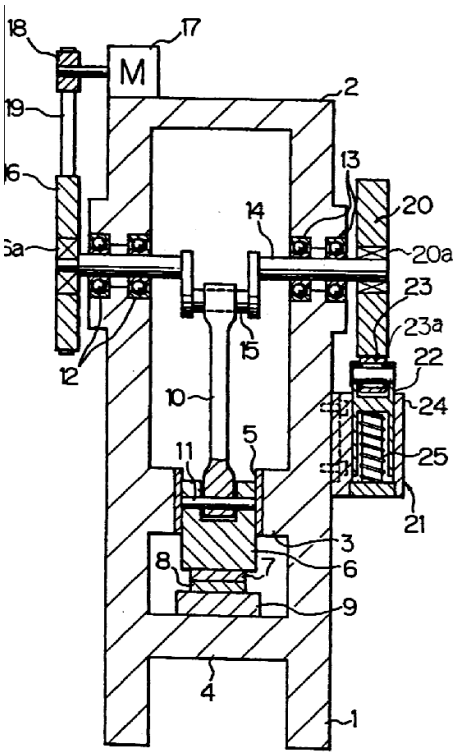

DE403768 Driven axis is a which drives b

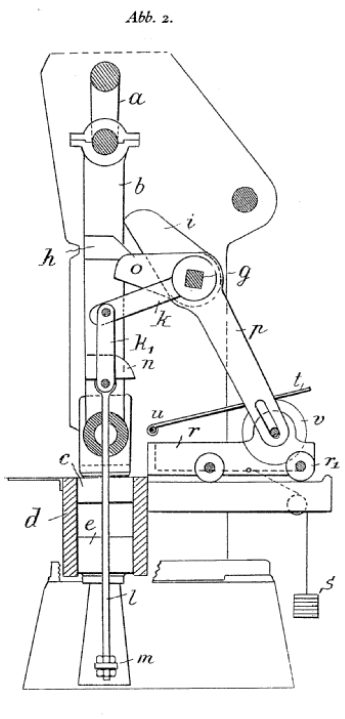

Eccentrics:

DE19810425 continuous axis 4 is driven, around the excenter or cam is the bush which is rotated in an excentric way to drive part 12 for 'opening closing clamping mould 3'

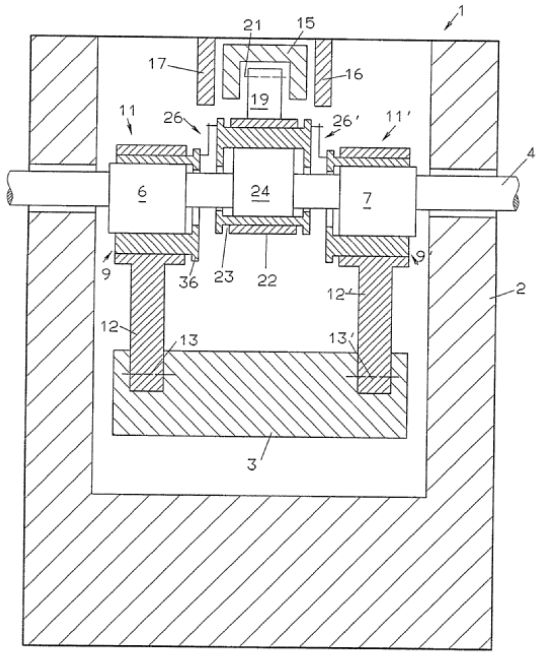

References

Informative references

Attention is drawn to the following places, which may be of interest for search:

Presses driven by a lever mechanism	B30B 1/02
Presses driven by cranks, cams, or eccentrics	B30B 1/26

B29C 45/661

{using a toggle mechanism for mould clamping}

Definition statement

This place covers:

EP775567 screw nut drives the toggle, the toggle drives the moving mould, therefore toggle

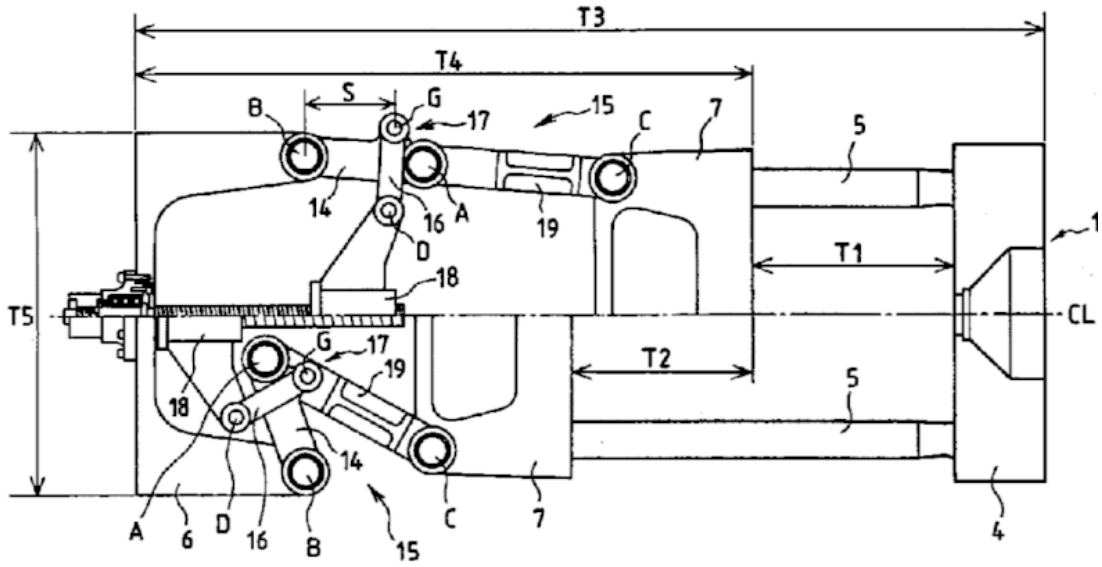

EP546187 fig 5 toggle

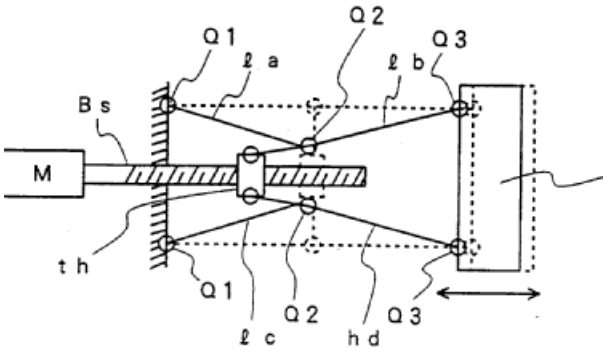

EP427438 fig 5 rack & pignon drives the toggle

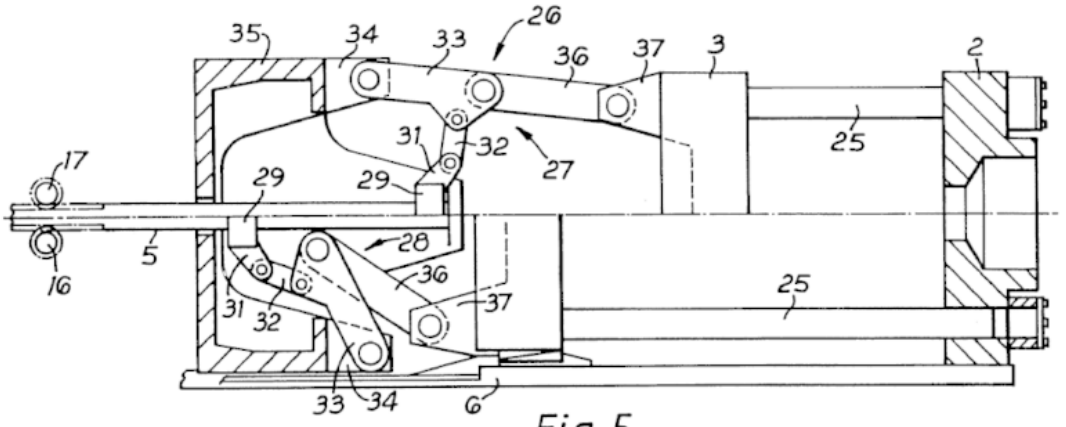

Fig. 5

EP164419 fig 1, servomotor 1 driving nut 4 & screw drives the toggle

FIG.1

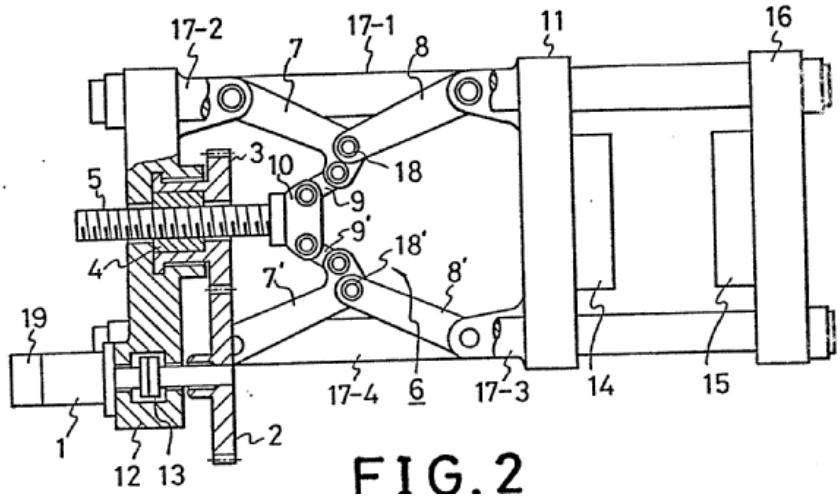

FIG.2

Reference is further made to several types of toggle mechanisms for mould clamping:

DE9403353U figures 1,2 and 3,

Fig. 1

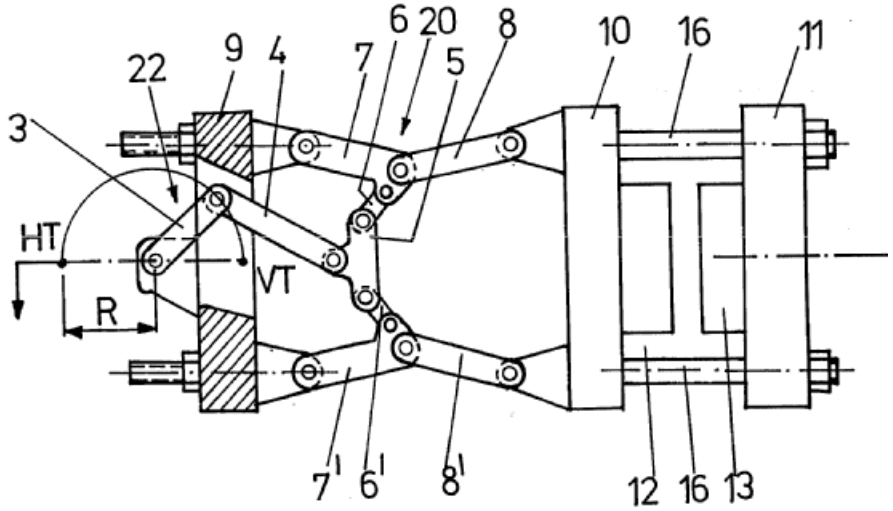

EP573917 fig 1,

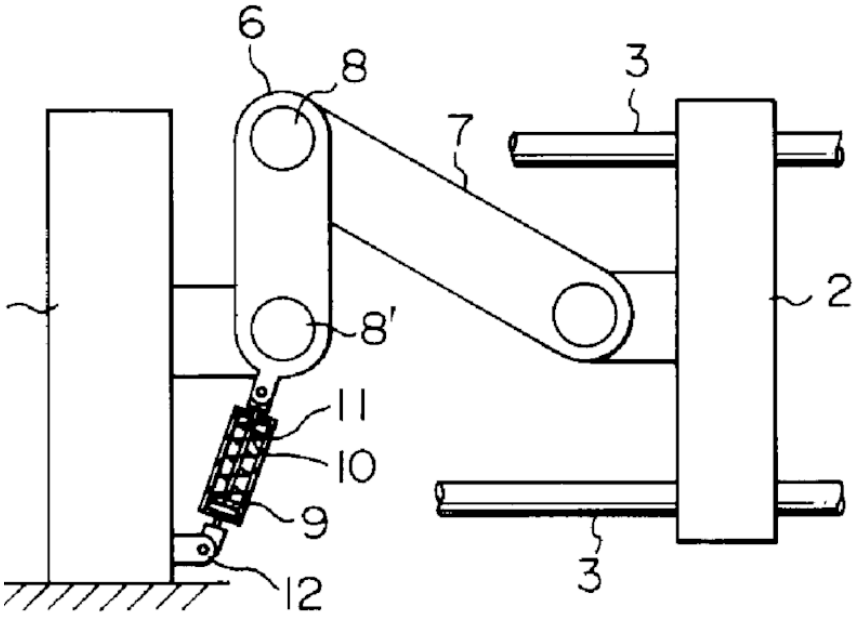

EP383935 fig 1

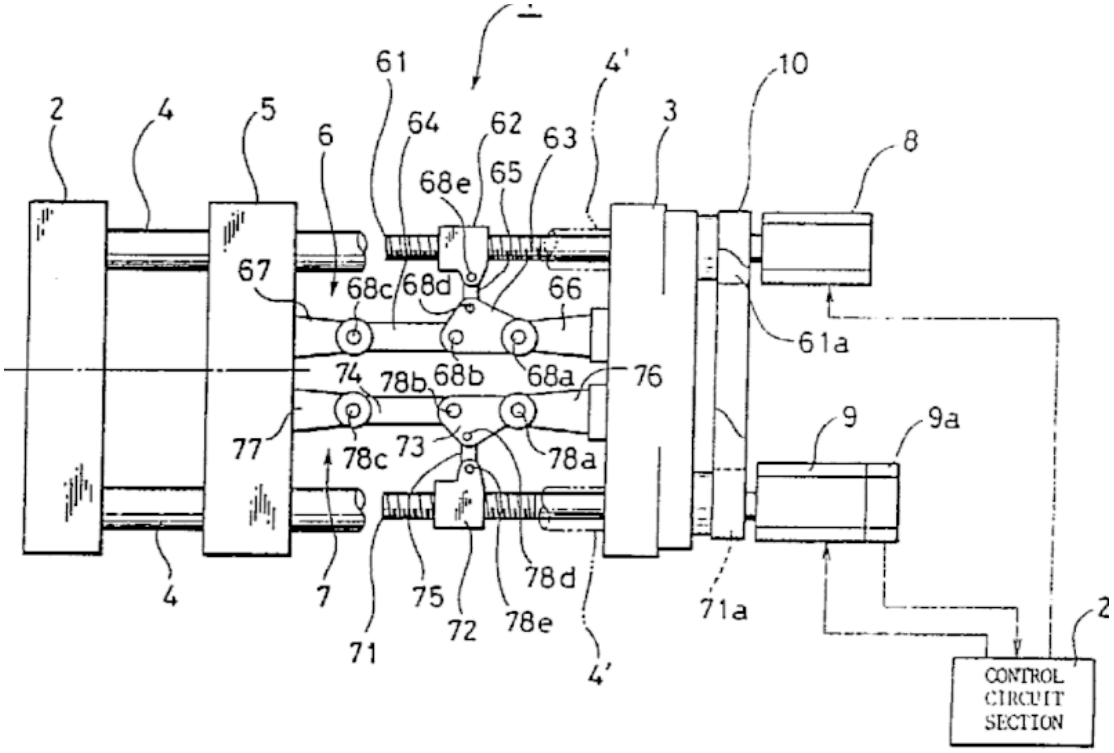

References

Informative references

Attention is drawn to the following places, which may be of interest for search:

Presses driven by a toggle mechanism	B30B 1/10

B29C 45/67

hydraulic

Definition statement

This place covers:

EP665093, clamping cylinder 32, opening &closing cylinder 22

hydraulic includes also other fluids & gas (e.g. pneumatic)

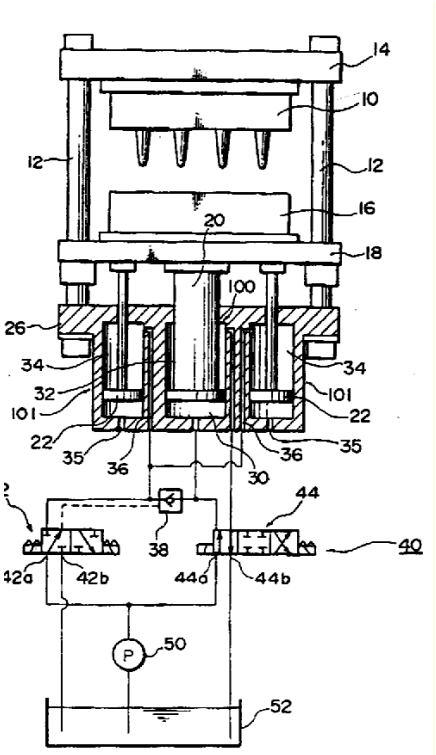

References

Informative references

Attention is drawn to the following places, which may be of interest for search:

Hydraulic circuits in general	B29C 45/82

B29C 45/6707

{without relative movement between the piston and the cylinder of the clamping device during the mould opening or closing movement}

Definition statement

This place covers:

JP10296809, during opening and closing operation by cylinder 20, the clamping force cylinder 22 is inactive and moves together with the movable platen 18. Only after closing the mould and clamping on

the tie rods (locking nut & cylinder 26,28), there is a relative movement between the piston 24 and the cylinder 22 of the clamping device

【図１】

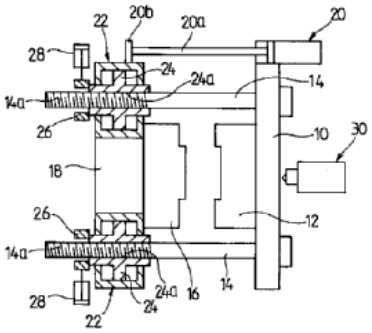

【図２】

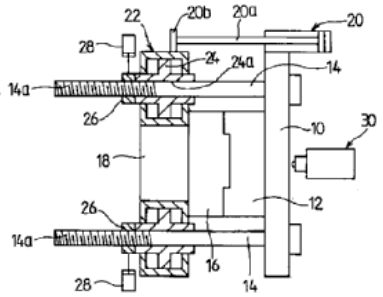

【図３】

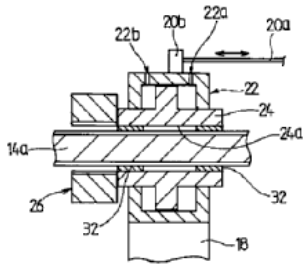

EP689924, opening & closing by cylinder 8, locking means 9 after locking clamping by cylinder 6.

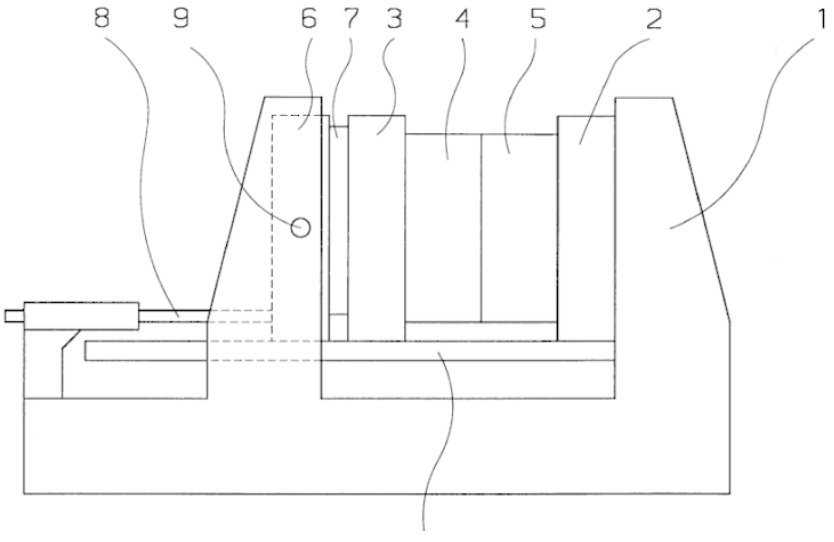

EP319487 10 = closing means, clamping on tie rod by 12, pulling & clamping by 36

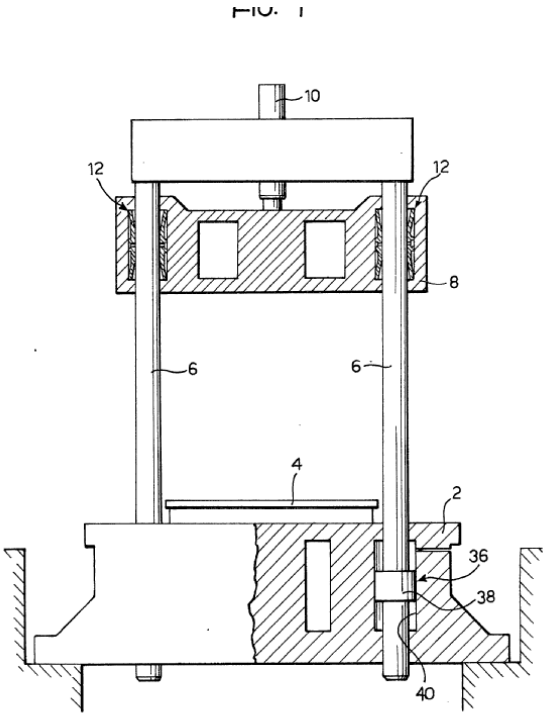

WO99/00239, closing by cylinder 5, blocking on tie rod by 19, tie rod clamped by cylinder 13

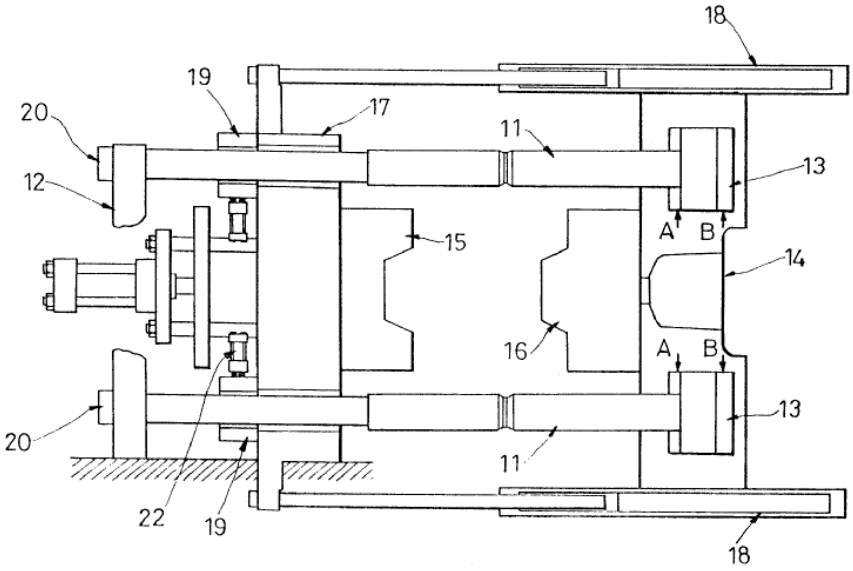

US3862596, exceptional no clamping on the tie rods, similar no movement for the clamping cylinder

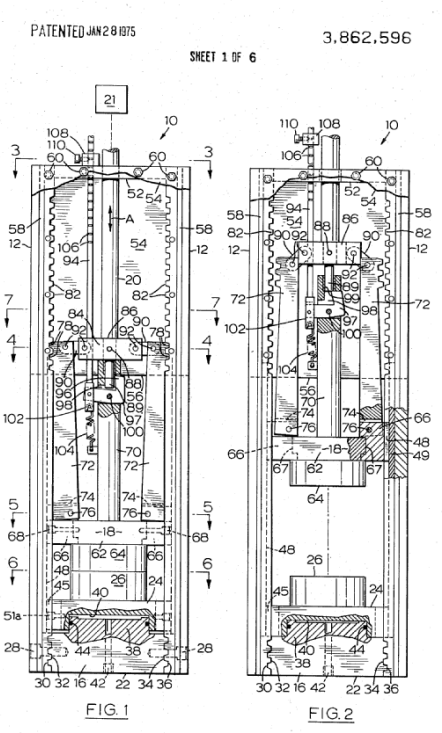

US3833333 movable cylinder, clamping cylinder 45/47/48, opening & closing 20/21

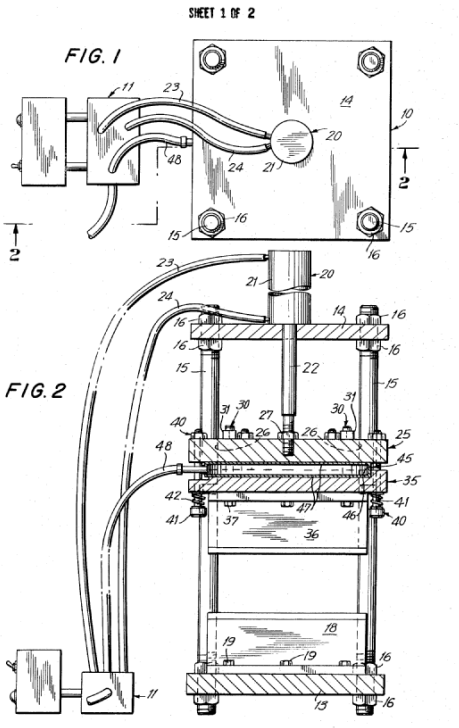

References

Informative references

Attention is drawn to the following places, which may be of interest for search:

Presses using low fluid pressure long stroke plunger for opening and closing and high pressure short stroke cylinder means	B30B 1/323

B29C 45/6714

{using a separate element transmitting the mould clamping force from the clamping cylinder to the mould}

Definition statement

This place covers:

Separate element is MCFTM (mould clamping force transmitting means)

EP551099 fig 1, element 28 = MCFTM & moves with the movable mould.

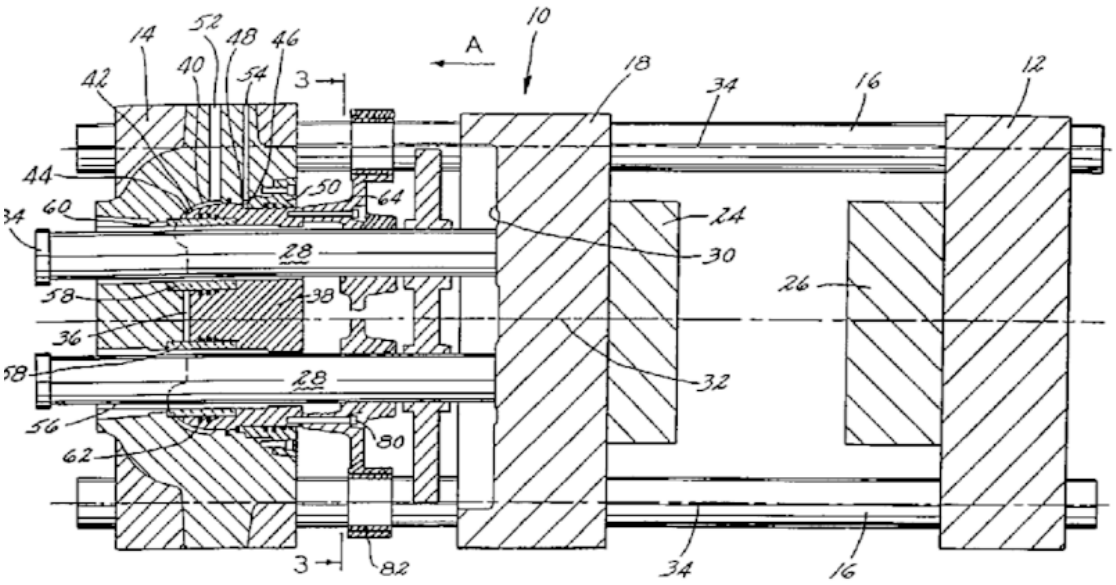

FIG-1

Once the mould is closed (fig 2), block plate 66, required for being able to transmit the clamping force. Note that the clamping cylinder is not operative during opening & closing

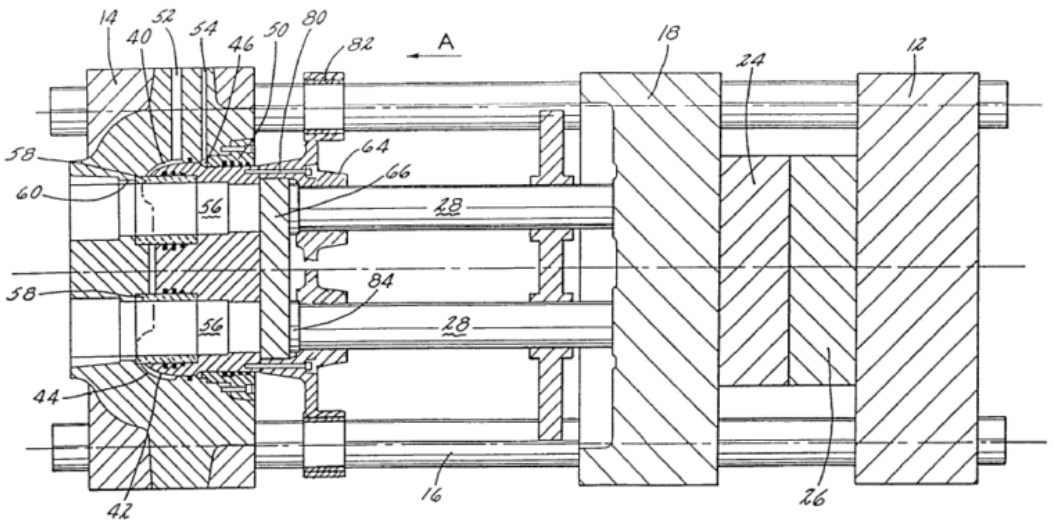

FIG-2

EP513572: MCFTM 30/31.

Fig 1 mould closed, blocked position

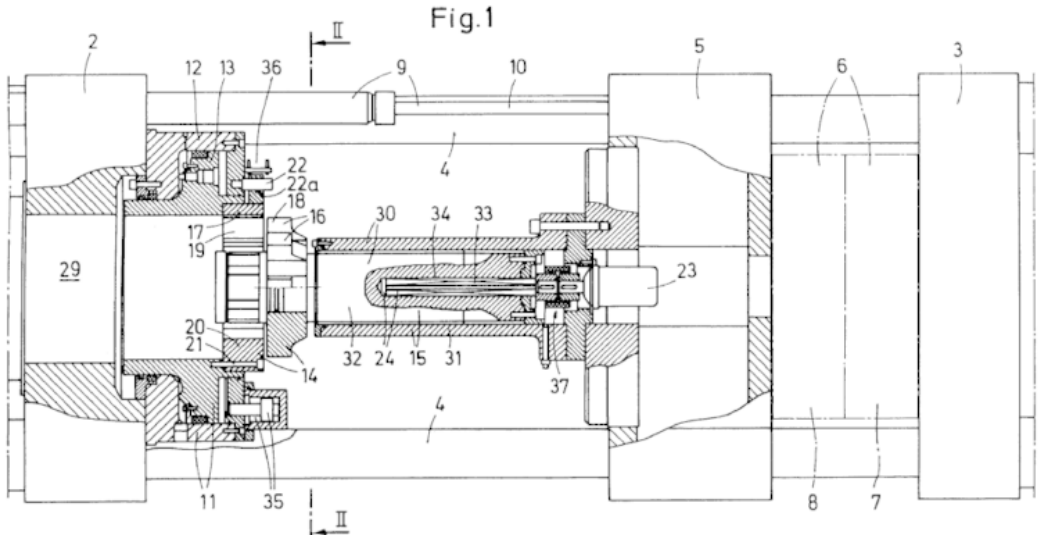

fig 3 & clamping force can be transmitted

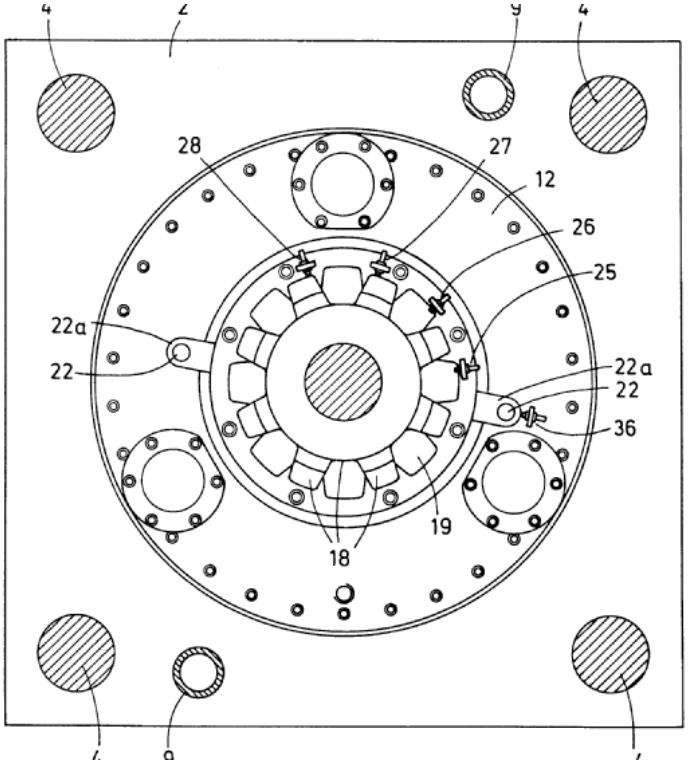

EP480351 MCFTM = element 18

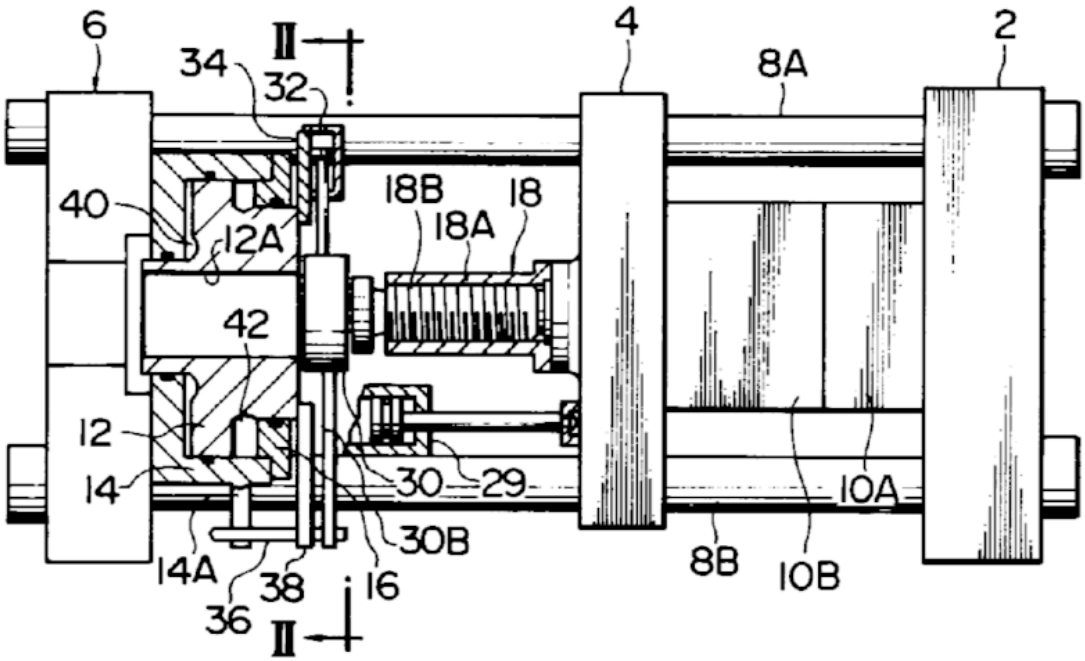

References

Informative references

Attention is drawn to the following places, which may be of interest for search:

Presses using low fluid pressure long stroke plunger for opening and closing and high pressure short stroke cylinder means	B30B 1/323

B29C 45/6721

{the separate element being displaceable with respect to the mould or the clamping cylinder}

Definition statement

This place covers:

MCFTM (mould clamping force transmission means, cf. B29C 45/6714) is 'removable'.

GB1220970 MCFTM 15 is put in between only when the mould is closed, see fig 1, otherwise opening & closing cylinder 6,7 would not be able to open the mould.

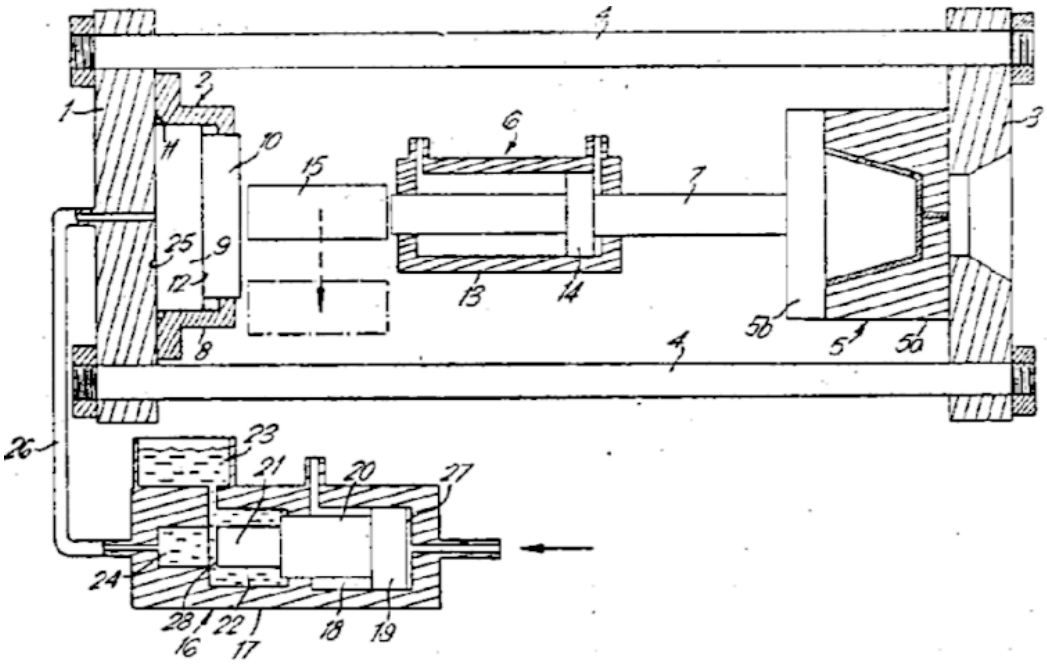

GB1032477 element 8 = removable MCFTM (fig 1 & 2)

Fig. 1

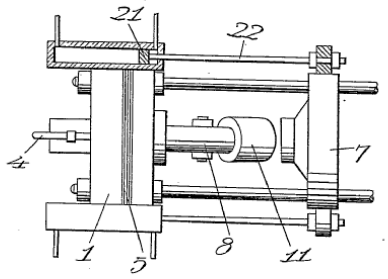

Fig. 2

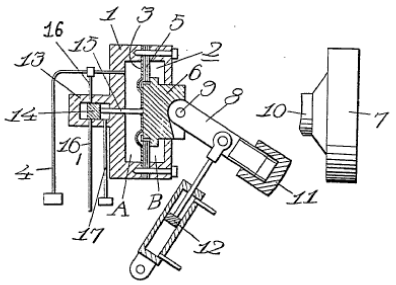

FR2084078 removable MCFTM = element 44

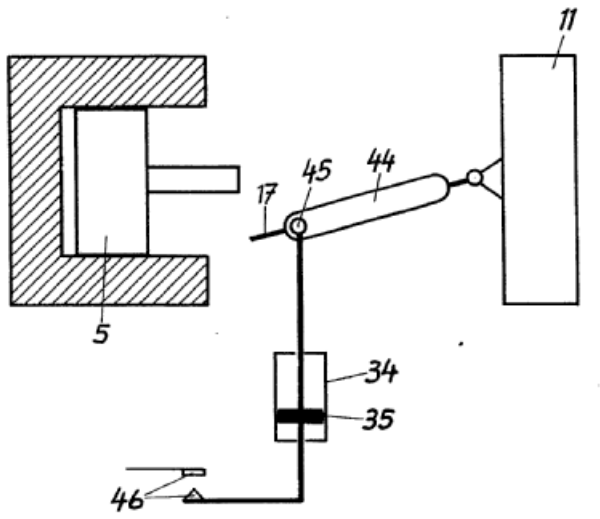

B29C 45/6728

{the separate element consisting of coupling rods}

Definition statement

This place covers:

tie rods mounted on and movable with the movable mould plate and coupled to the fixed mould plate during mould clamping. Bayonet couplings are typically applied.

The separate mould clamping force transmission means, (SMCFTM) is the coupling rod 164 in EP296410, coupling means 180.

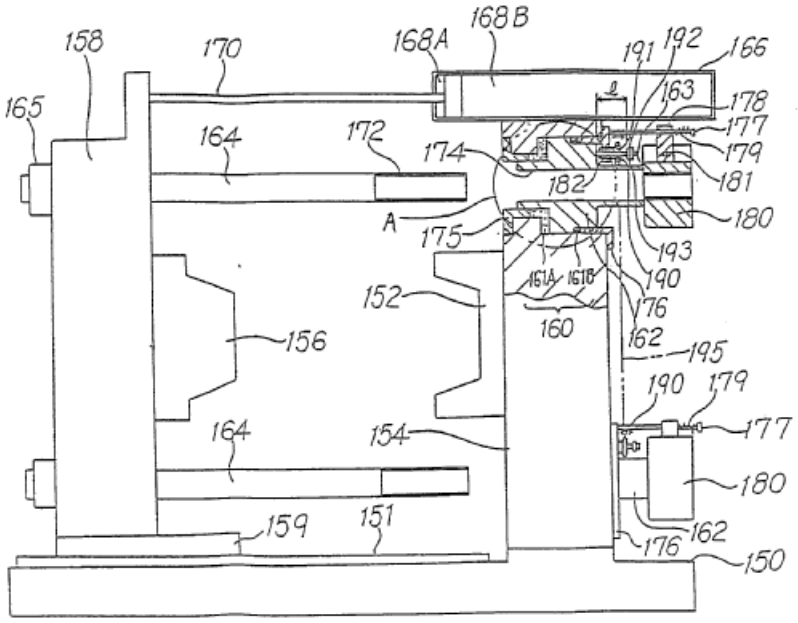

WO8902357, SMCFTM = coupling members 12,13. clamping by 16.

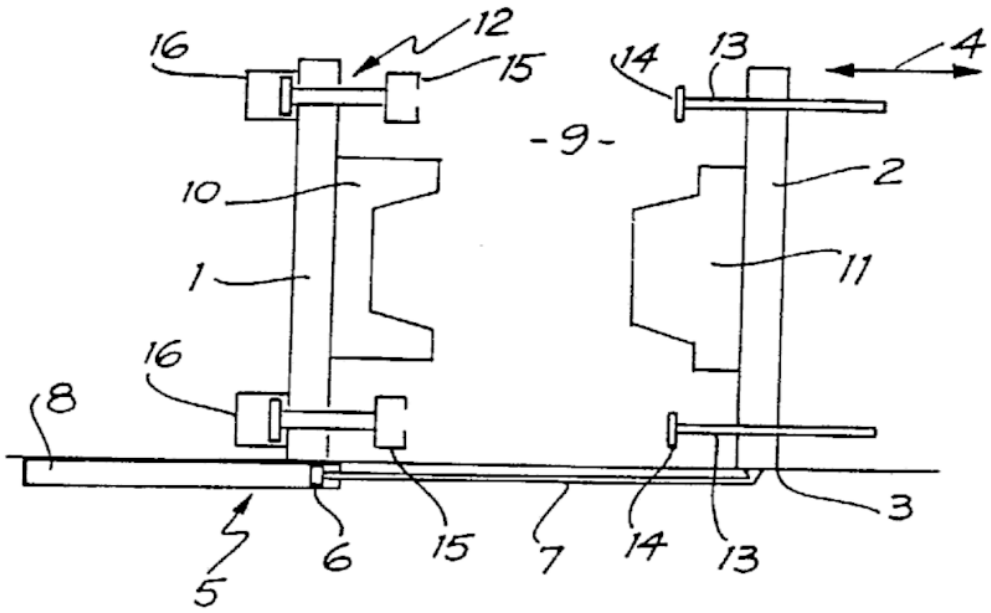

GB2064415 clamping bush 31, piston 18.

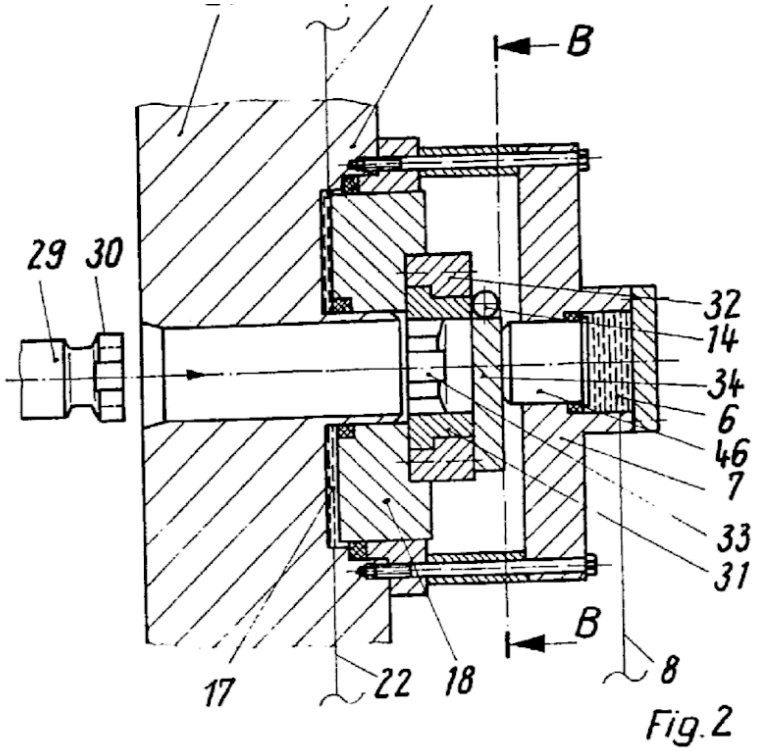

Fig. 2

B29C 45/6764

{using hydraulically connectable chambers of the clamping cylinder during the mould opening and closing movement}

Definition statement

This place covers:

JP7186220, hydraulic chambers A1 & A2 are able to communicate through passage 19 and valve 21 during the opening and closing movement of the clamping die. Note the difference in active piston surface area on the left side and right side of 11

Clamping pressure is typically applied to only one of the chambers (A1), note the possibility of fluid leakage through 23 & 25.

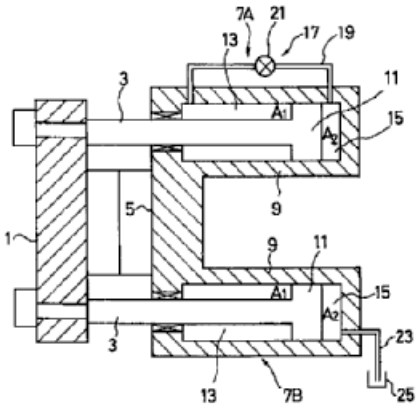

【図4】

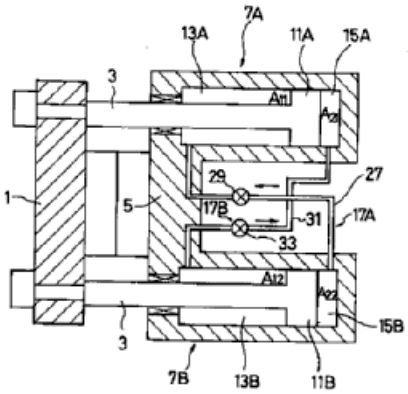

EP281330, fig 1, cylinder 27 during closing volume hydraulic chamber decreases so hydraulic oil moves through 33 into W. Fig 2, valve 34 is closed and high pressure oil is fed from pump 14 to W.

FIG.1

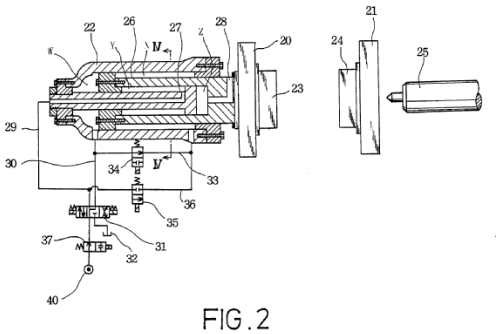

FIG.2

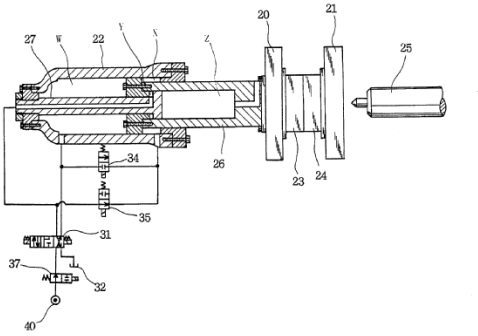

B29C 45/6771

{the connection being provided within the clamping cylinder}

Definition statement

This place covers:

EP342235, see fig 1,2 the different diameter clamping piston & cylinder. After closing, no connection between chamber 1a & 1b. In fig 1, the oil still flows between the chambers.

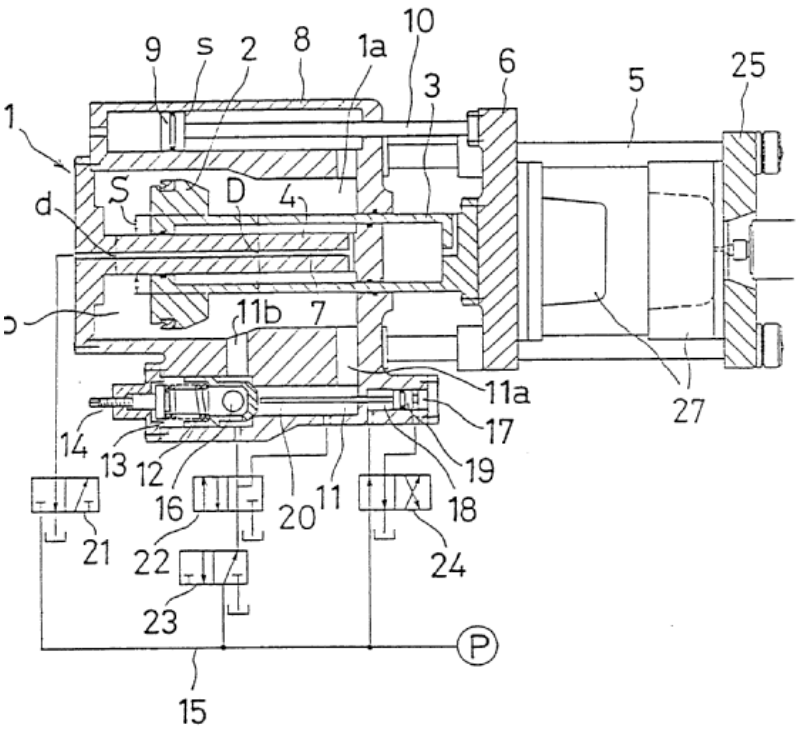

In fig 2, clamping is possible (chamber 1b).

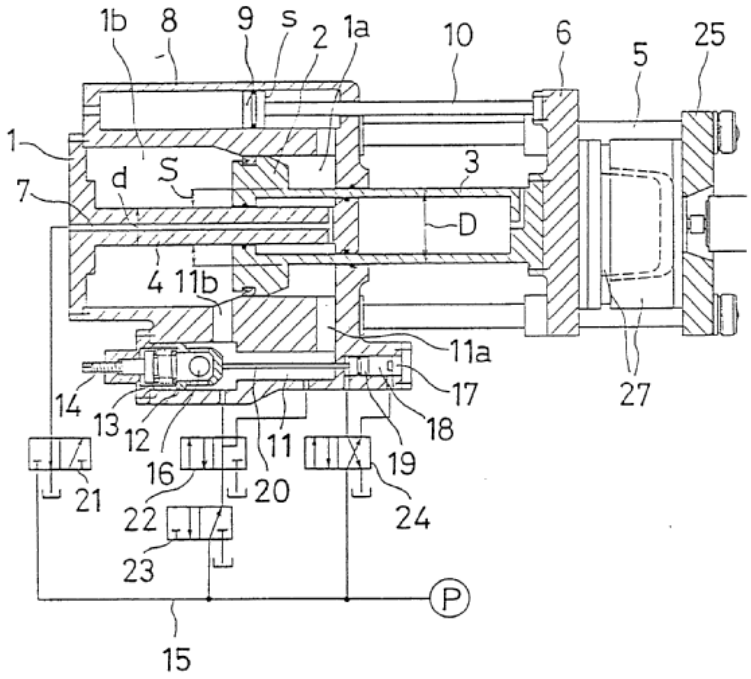

EP281329, opening 47 can be closed by valve 52.

Fig 4, open.

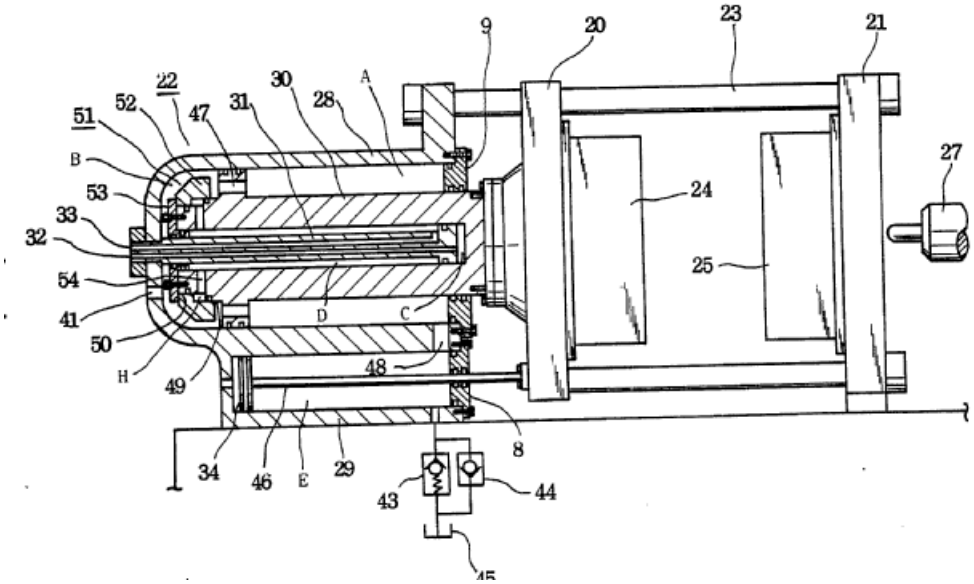

Figure 6, closed valve, now high pressure in room B, possible to clamp. The connection is done through the plunger.

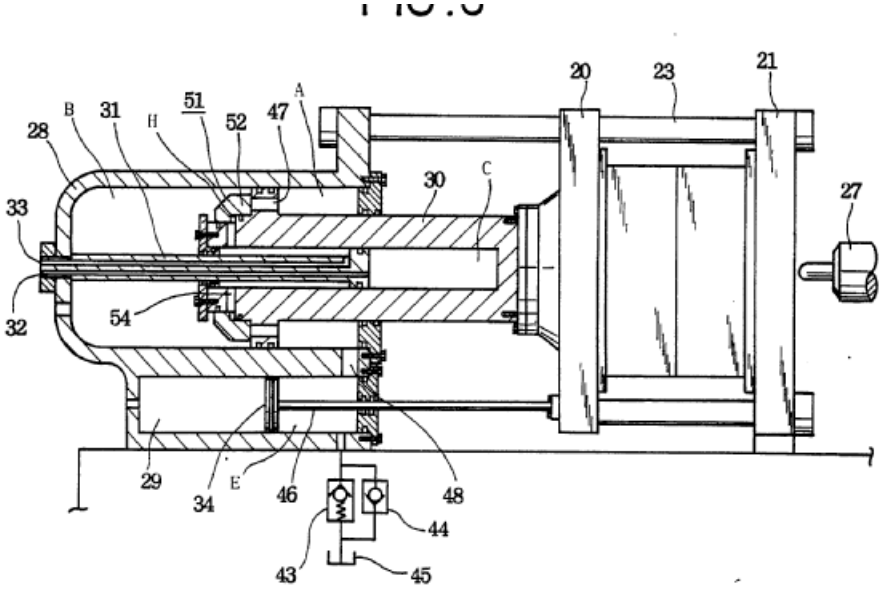

B29C 45/6778

{Stroke adjusting or limiting means}

Definition statement

This place covers:

DE2203020 cf. element 3

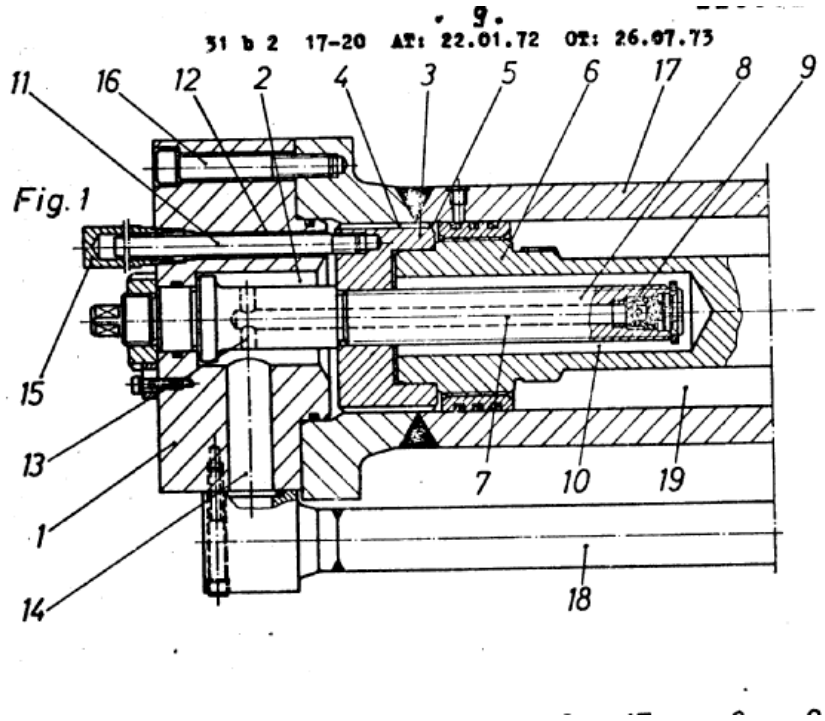

B29C 45/68

hydro-mechanical

Definition statement

This place covers:

WO9211993, closing by screw/nut (fig 1), hydraulic chamber 19 for clamping.

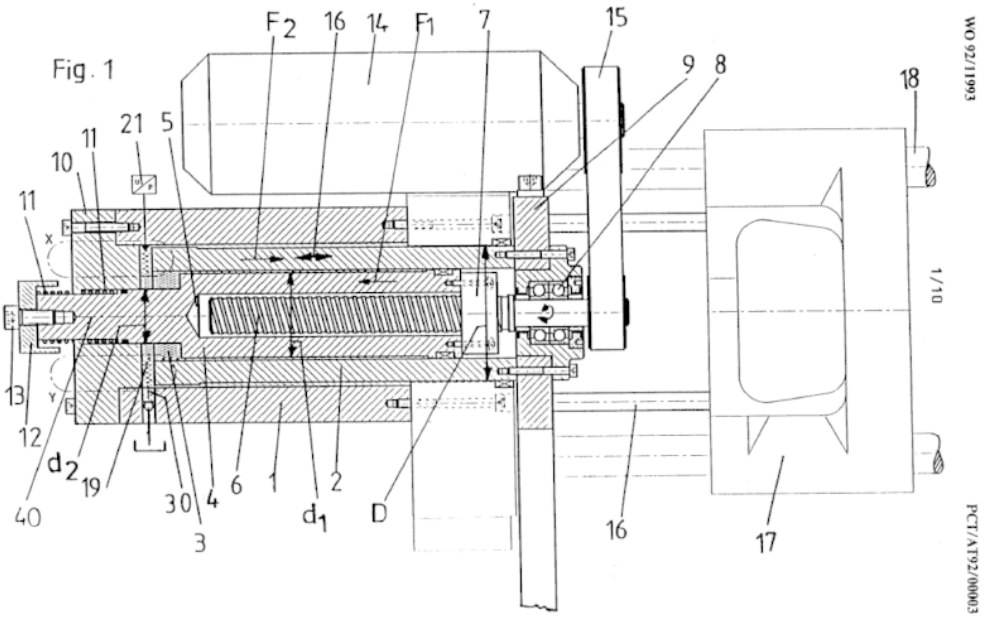

DE10103983

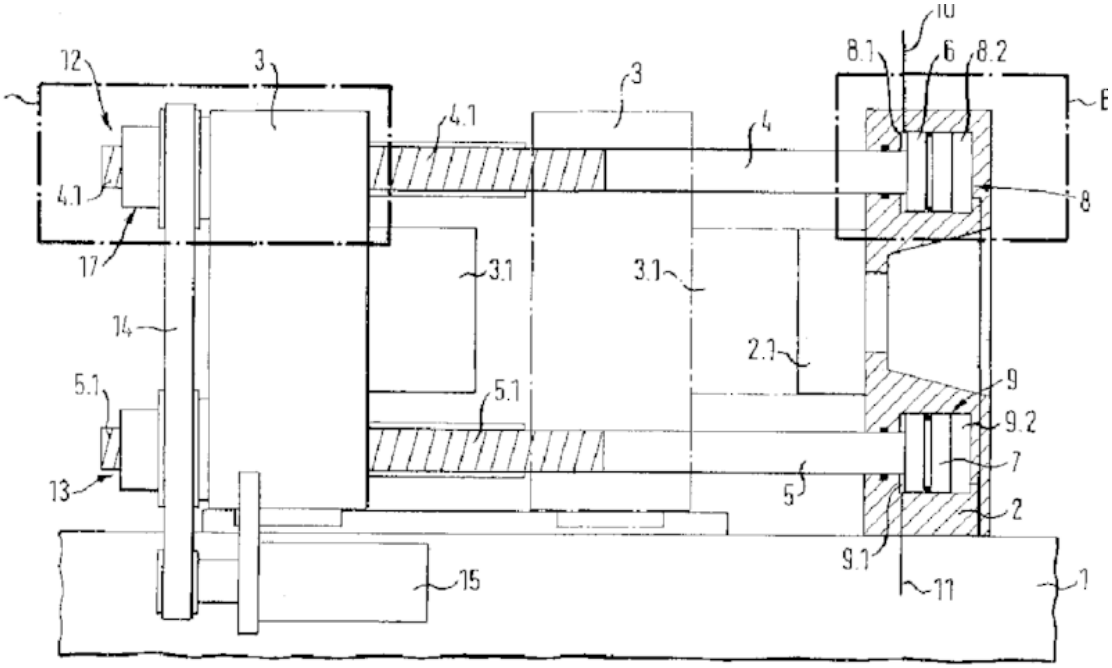

B29C 45/681

{using a toggle mechanism as mould clamping device}

Definition statement

This place covers:

EP192484, piston 4 drives the toggle 5 for opening, closing and clamping.

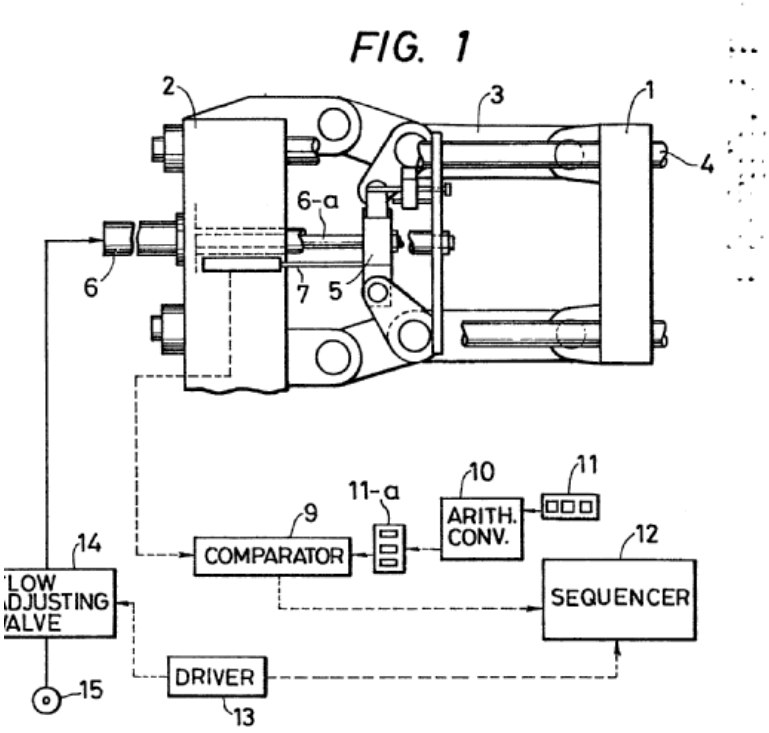

WO8900914, cf. fig 1

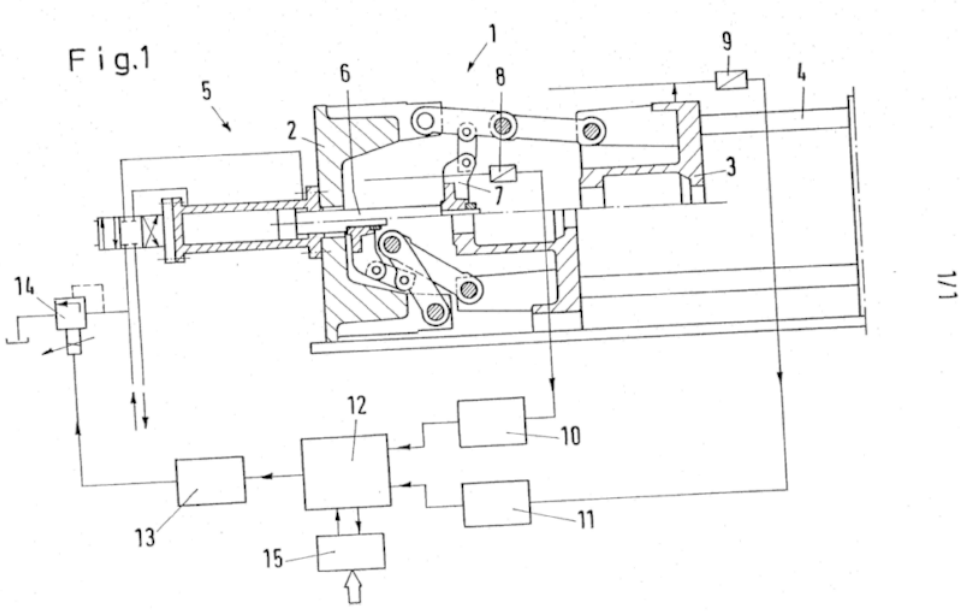

B29C 45/683

{using both a toggle mechanism as mould closing device and another mechanism as mould clamping device}

Definition statement

This place covers:

FR2317982, closing by toggle. The toggle is only used for closing, not for clamping. A separate cylinder (6,7,8) is provided for clamping.

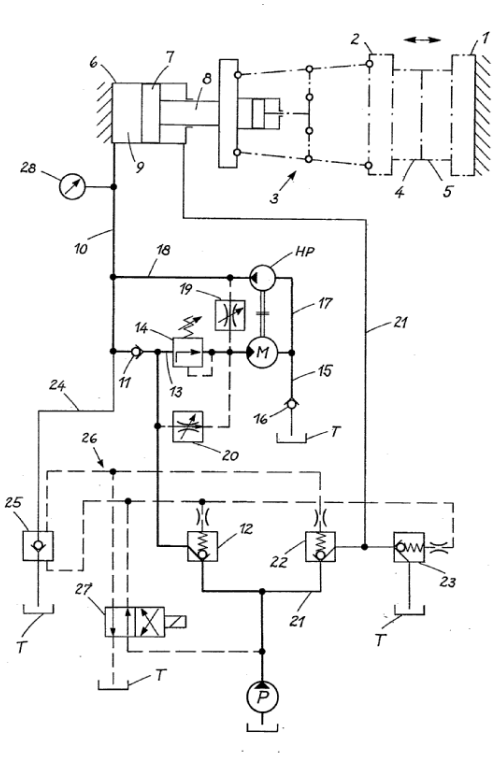

FR2302187, Closing of toggle 5,6 by cylinder 1.Separate means (14) for clamping

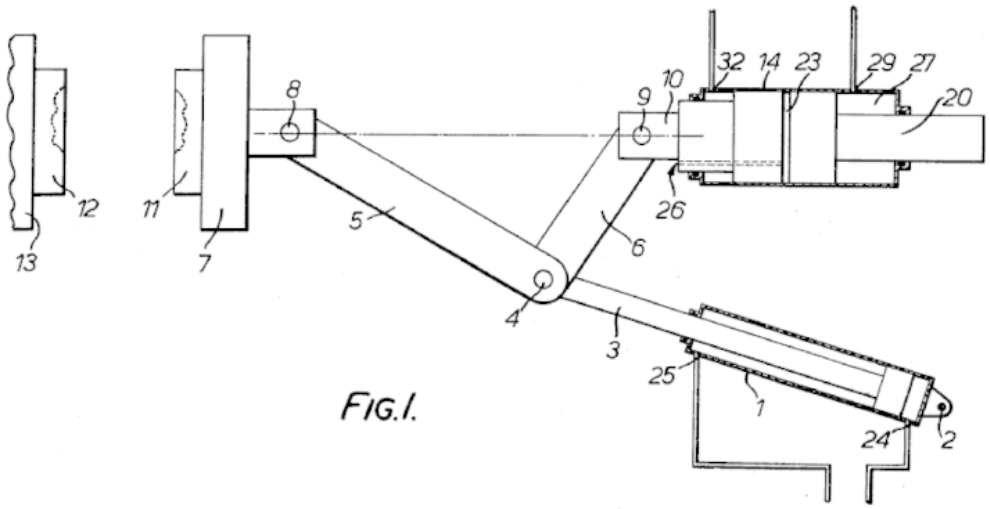

FIG.1.

B29C 45/72

Heating or cooling

Definition statement

This place covers:

Heating or cooling of the mould (covered by B29C 45/73), the moulded articles (covered by B29C 45/7207), the injection unit (covered by B29C 45/74) as well as the mould and the injection unit (covered by B29C 45/72).

References

Limiting references

This place does not cover:

Heating or cooling means for moulds provided with fine grooves or impressions	B29C 45/263
Heating or cooling means for runner channels	B29C 45/2737
Heating of tablets	B29C 45/462

B29C 45/7207

{of the moulded articles}

References

Informative references

Attention is drawn to the following places, which may be of interest for search:

Cooling preforms during blow moulding:	B29C 49/6427

Cooling in general:	F25D 13/065

B29C 45/73

of the mould {(B29C 45/2642 and B29C 45/2737 take precedence)}

References

Informative references

Attention is drawn to the following places, which may be of interest for search:

Moulds with incorporated heating or cooling means in general	B29C 33/02
Cooling or heating equipment for pressure casting dies	B22D 17/2218
Press plates with heating or cooling means	B30B 15/064

B29C 45/7306

{Control circuits therefor}

References

Informative references

Attention is drawn to the following places, which may be of interest for search:

Tempering units for temperature control of moulds or cores in general	B29C 35/007

B29C 45/74

of the injection unit

Definition statement

This place covers:

heating of the injection unit, including everything which belongs to it, e.g. hopper, cylinder.

References

Limiting references

This place does not cover:

Heating and cooling of the injection unit AND the mould	B29C 45/72

Informative references

Attention is drawn to the following places, which may be of interest for search:

Heating or cooling of the extrusion cylinder	B29C 48/83

B29C 45/76

Measuring, controlling or regulating {(measuring in general G01; controlling or regulating in general G05)}

References

Limiting references

This place does not cover:

Control and regulation of mould thickness adjustments	B29C 45/1751

Special rules of classification

Document classified in B29C 45/76 and subgroups are indexed by allocating B29C 2945/00 Indexing Codes to identify all aspect related to what, how, when, where the measurement is done and what, how, where and when the regulation is done. .

B29C 45/7626

{the ejection or removal of moulded articles}

Definition statement

This place covers:

e.g. using a camera or laser to inspect if an article has been correctly ejected, the process of ejection.

Special rules of classification

Since B29C 45/7626 takes precedence over B29C 45/84, inspection systems for controlling the ejection, including an alarm system as a safety device, are only classified in B29C 45/7626.

B29C 2045/764

{detecting or preventing overload of an ejector}

References

Informative references

Attention is drawn to the following places, which may be of interest for search:

Force sensors associated with industrial machines or actuators with specific indicating arrangements, e.g. of overload	G01L 5/0071

B29C 45/7686

{the ejected articles, e.g. weight control}

Relationships with other classification places

Measuring and controlling of the articles once they are ejected.

References

Informative references

Attention is drawn to the following places, which may be of interest for search:

Control of the ejection process of moulded articles	B29C 45/7626

B29C 45/82

Hydraulic {or pneumatic} circuits

References

Limiting references

This place does not cover:

Hydraulic or pneumatic circuits for mould clamping	B29C 45/67

B29C 45/83

Lubricating means

References

Limiting references

This place does not cover:

Release agents, lubricating means for mould cavity walls	B29C 33/60

Informative references

Attention is drawn to the following places, which may be of interest for search:

Cleaning or lubricating moulds in pressure die casting	B22D 17/2007
Lubricating means for presses	B30B 15/0088, B30B 15/0011

B29C 45/84

Safety devices {(B29C 45/7626 takes precedence)}

References

Limiting references

This place does not cover:

Safety devices for the ejection process	B29C 45/7626

Informative references

Attention is drawn to the following places, which may be of interest for search:

Safety devices for pressure die casting	B22D 17/2092

B29C 45/842

{Detection of insert defects, e.g. inaccurate position, breakage}

Definition statement

This place covers:

e.g. detection of broken glass to be overmoulded, misfeeding the inserts

B29C 2045/848

{detecting or preventing overload of an injection plunger}

References

Informative references

Attention is drawn to the following places, which may be of interest for search:

Force sensors associated with industrial machines or actuators with specific indicating arrangements, e.g. of overload	G01L 5/0071

B29C 48/00

Extrusion moulding, i.e. expressing the moulding material through a die or nozzle which imparts the desired form; Apparatus therefor (extrusion blow-moulding B29C 49/04)

Definition statement

This place covers:

Processes whereby material of substances in a plastic state (e.g. polymers) are being pressed through a nozzle, thereby obtaining a cross sectional shape. This shape could be any hollow or solid shape.

Combinations of extrusion and other shaping techniques.

References

Limiting references

This place does not cover:

Extrusion blow-moulding	B29C 49/04

Informative references

Attention is drawn to the following places, which may be of interest for search:

Apparatus for additive manufacturing	B29C 64/20
Combined blow-moulding and manufacture of the preform or the parison, whereby the parison is being partly injected and partly extruded	B29C 2949/3032, B29C 2949/3041
Mixing dough	A21C 1/00
Mixing chocolate	A23G
Mixing in general, phases	B01F 23/00
Mixing in general, mixer types	B01F 25/00

Mixing in general, mixers with rotary stirring devices	B01F 27/00
Hand held extruders	B05C 17/00
Extruding metal	B21C 23/00
Presses for clay or mixtures containing cement wherein material is extruded	B28B 3/20
Extruding clay	B28B 3/22
Mixing, kneading of the material to be shaped	B29B 7/00
Mixing or kneading with more than one shaft	B29B 7/46
Making preforms by extrusion moulding	B29B 11/10
Presses using a press ram	B30B 1/00
Extrusion presses	B30B 11/22
Machinery for making envelopes or bags etc	B31B
Folding and filling bags	B65B 9/08
Extruding microstructures	B81B, B81C
Reaction extrusion	C08
Formation of filaments, threads, or the like, e.g. by melt spinning	D01D 5/00

Special rules of classification

All material aspects, not only the moulding material as such, but also fillers, preformed parts of mould (die) composition has to be identified by allocating the appropriate Indexing Code of B29K. This also applies to moulding material properties, e.g. tear strength for identifying that extruded layers are easily torn apart is classified in B29K 2995/0081.

Extrusion techniques characterised by the material must be allocated a classification in B29C 48/0022.

All SHAPING CONDITIONS influencing the extrusion technique, e.g. extrusion in sterile or vacuum environments, the application of vibrations, must be identified by allocating the appropriate Indexing Code as provided in B29C 2791/004 and subgroups, as well the classification in B29C 48/14 or subgroups.

Cutting operations and printing operations must be identified by allocating the appropriate Indexing Code as provided in B29C 2793/00 and B29C 2795/00.

All ARTICLES must be identified by allocating the appropriate Indexing Codes as provided for by the subclass B29L, e.g. anchoring between layers in general, e.g. due to chemical treatment B29C 2045/1664, mechanical anchoring in general, e.g. layers gripping into each other B29C 37/0082.

COMBINATIONS of extrusion and other techniques corresponding to the subgroups of B29C 48/001 are classified in B29C 48/001 or one of its subgroups.

Orienting or stretching of extruded materials should be identified by allocation the Indexing Code B29K 2995/005 and B29K 2995/0046 or one of its subgroups.

The Indexing Codes B29C 2791/00 - B29C 2791/003 are generally not used in this group B29C 48/00.

All MEASURING and CONTROL aspects must receive the relevant code(s) in the B29C 2948/92 indexing scheme.

B29C 48/0011

{combined with compression moulding}

References

Informative references

Attention is drawn to the following places, which may be of interest for search:

Compression moulding, i.e. applying external pressure to flow the moulding material, e.g. foaming	B29C 43/00
Coagulating materials by using a bath	B29C 48/919
Polymer / Wood fiber composites	B27N 3/28
Moulding materials	B29K 2001/00 - B29K 2103/00
Condition form or state of the material to be shaped or moulded material	B29K 2105/00
Use of materials as reinforcements	B29K 2201/00 - B29K 2313/00
Use of materials as preformed parts, e.g. inserts	B29K 2601/00 - B29K 2713/00
Use of materials as mould material	B29K 2801/00 - B29K 2913/00
Properties of the moulding materials	B29K 2995/00
Compositions of Macromolecular compounds in general	C08L 1/00 - C08L 101/10

B29C 48/0014

{producing flat articles having components brought in contact outside the extrusion die}

Definition statement

This place covers:

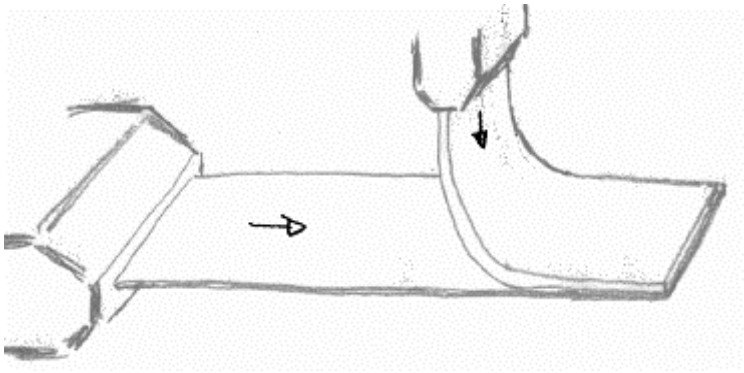

B29C 48/0015

{producing hollow articles having components brought in contact outside the extrusion die}

Definition statement

This place covers:

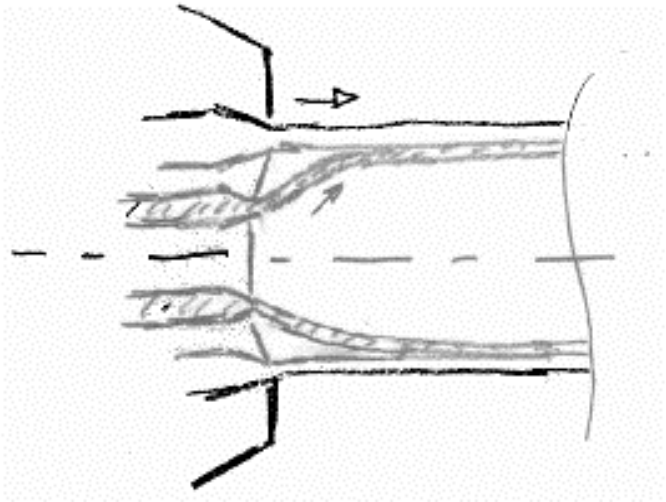

B29C 48/0016

{using a plurality of extrusion dies}

Definition statement

This place covers:

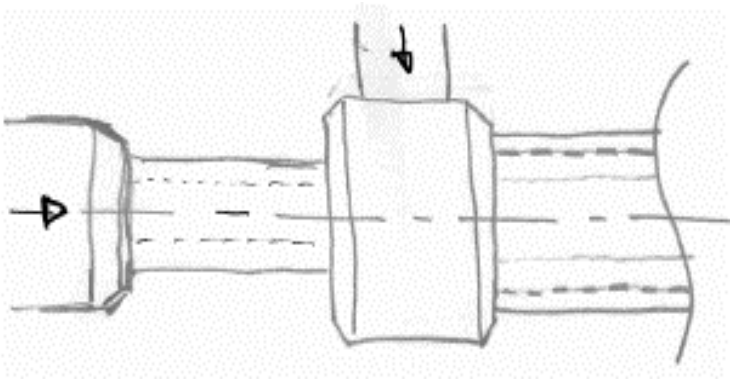

B29C 48/0017

{combined with blow-moulding or thermoforming}

References

Informative references

Attention is drawn to the following places, which may be of interest for search:

Blow moulding combined with the manufacture of the preform	B29C 49/02
Thermoforming combined with the manufacture of the preform	B29C 51/02

B29C 48/0018

{combined with shaping by orienting, stretching or shrinking, e.g. film blowing (B29C 48/0017 takes precedence)}

References

Limiting references

This place does not cover:

Extrusion moulding combined with blow-moulding or thermoforming	B29C 48/0017

Informative references

Attention is drawn to the following places, which may be of interest for search:

Oriented material	B29K 2995/005

Special rules of classification

The Indexing Codes as provided in B29K 2995/005 and B29K 2995/0046 and subgroups should preferably be allocated to identify aspects relating to orienting or stretching.

B29C 48/0019

{combined with shaping by flattening, folding or bending}

References

Informative references

Attention is drawn to the following places, which may be of interest for search:

Shaping by bending, folding, twisting, straightening or flattening of blown tubular films	B29C 53/10
Folding sheets for making bags	B31B 50/26
Folding and filling bags	B65B 9/08

B29C 48/002

{combined with surface shaping}

References

Informative references

Attention is drawn to the following places, which may be of interest for search:

Surface shaping of articles, e.g. embossing; Apparatus therefor	B29C 59/00

B29C 48/0021

{combined with joining, lining or laminating}

References

Informative references

Attention is drawn to the following places, which may be of interest for search:

Lining or sheathing, i.e. applying preformed layers or sheathings of plastics; Apparatus therefor	B29C 63/00
Joining or sealing of preformed parts, e.g. welding of plastics materials; Apparatus therefor	B29C 65/00
Methods or apparatus for laminating, e.g. by curing or by ultrasonic bonding	B32B 37/00

B29C 48/0022

{combined with cutting}

References

Informative references

Attention is drawn to the following places, which may be of interest for search:

Cutting	B29C 2793/00
Cutting off	B29C 2793/0027
Cutting longitudinally	B29C 2793/0063

Special rules of classification

The Indexing Codes as provided in B29C 2793/00 and subgroups should preferably be allocated to identify aspects relating to the process of cutting

B29C 48/0023

{combined with printing or marking}

References

Informative references

Attention is drawn to the following places, which may be of interest for search:

Printing	B29C 2795/00

Special rules of classification

The Indexing Codes as provided in B29C 2795/00 and subgroups should preferably be allocated to identify aspects relating to the process of printing.

B29C 48/02

Small extruding apparatus, e.g. handheld, toy or laboratory extruders

Definition statement

This place covers:

- Handheld extruders;
- Toy extruders;
- Laboratory extruders, e.g. extruders used for material testing or for making test specimens for testing material properties.

Illustrative examples of subject matter classified in this place:

1.

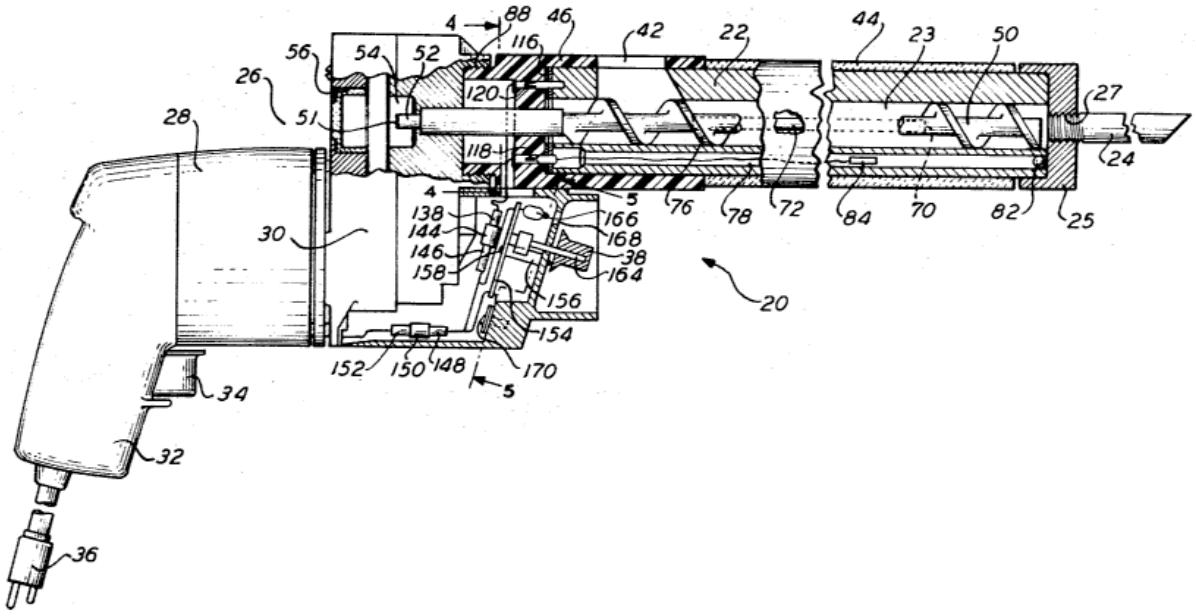

Figure 1 illustrates a handheld extruder.

2.

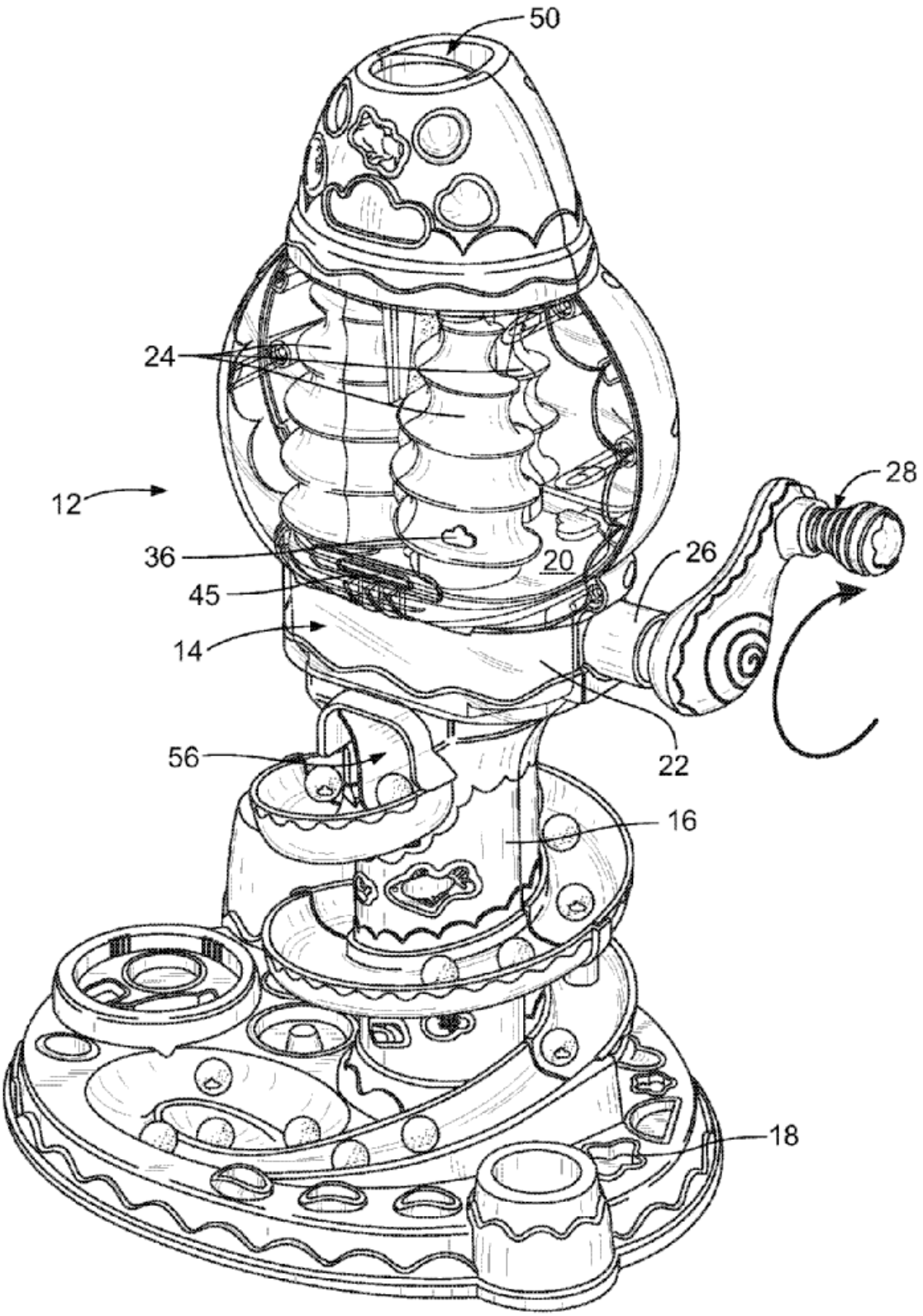

Figure 2 illustrates a toy extruder.

3.

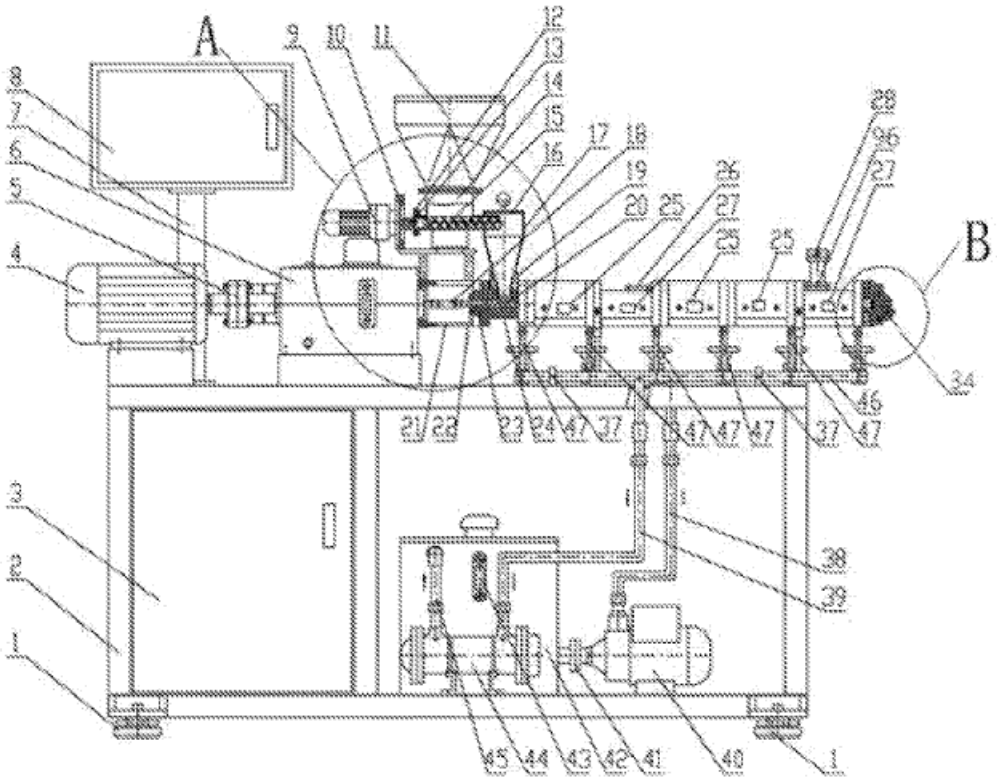

Figure 3 illustrates a laboratory extruder.

References

Informative references

Attention is drawn to the following places, which may be of interest for search:

Design of extruder parts, e.g. by modelling based on mathematical theories or experiments	B29C 48/251

B29C 48/022

{characterised by the choice of material}

References

Informative references

Attention is drawn to the following places, which may be of interest for search:

Coagulating materials by using a bath	B29C 48/919
Polymer / Wood fiber composites	B27N 3/28
Moulding materials	B29K 2001/00 - B29K 2103/00
Condition form or state of the material to be shaped or moulded material	B29K 2105/00
Use of materials as reinforcements	B29K 2201/00 - B29K 2313/00

Use of materials as preformed parts, e.g. inserts	B29K 2601/00 - B29K 2713/00
Use of materials as mould material	B29K 2801/00 - B29K 2913/00
Properties of the moulding materials	B29K 2995/00
Compostions of Macromolecular compounds in general	C08L 1/00 - C08L 101/10

B29C 48/023

{Extruding materials comprising incompatible ingredients}

References

Informative references

Attention is drawn to the following places, which may be of interest for search:

Feeding at several locations	B29C 48/297
Degradable materials	B29K 2995/0059

B29C 48/025

General arrangement or layout of plant

References

Informative references

Attention is drawn to the following places, which may be of interest for search:

Using more than one extruder to feed one die, e.g. adapter blocks	B29C 48/49

B29C 48/0255

{for extruding parallel streams of material, e.g. several separate parallel streams of extruded material forming separate articles (B29C 48/0013, B29C 48/345 takes precedence)}

References

Limiting references

This place does not cover:

Extrusion moulding in several steps	B29C 48/0013
Extrusion nozzles comprising two or more adjacently arranged ports	B29C 48/345

Informative references

Attention is drawn to the following places, which may be of interest for search:

Using more than one extruder to feed one die, e.g. adapter blocks	B29C 48/49

B29C 48/03

characterised by the shape of the extruded material at extrusion

References

Informative references

Attention is drawn to the following places, which may be of interest for search:

Extrusion dies or nozzles	B29C 48/30
Manufactured articles	B29L

B29C 48/04

Particle-shaped (making granules B29B 9/00)

Definition statement

This place covers:

The extrusion moulding articles characterised by their shape, the shape being particle, powder, or granule.



References

Limiting references

This place does not cover:

Making granules	B29B 9/00

Informative references

Attention is drawn to the following places, which may be of interest for search:

Particles, powder, granules	B29K 2105/251

B29C 48/05

Filamentary, e.g. strands

Definition statement

This place covers:

The extrusion moulding articles characterised by their shape, the shape being filamentary (e.g. threads, fibres).

References

Informative references

Attention is drawn to the following places, which may be of interest for search:

Multiple annular extrusion nozzles in coaxial arrangement, e.g. for making multi-layered tubular articles	B29C 48/335
Producing filamentary materials	B29D 99/0078
Filamentary material	B29L 2031/731

B29C 48/06

Rod-shaped

Definition statement

This place covers:

The extrusion moulding articles characterised by their shape, the shape being non-tubular rigid (e.g. rod).

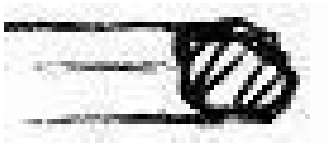

References

Informative references

Attention is drawn to the following places, which may be of interest for search:

Producing rods	B29D 99/0046
Rods	B29L 2031/06

B29C 48/07

Flat, e.g. panels

Definition statement

This place covers:

The extrusion moulding articles characterised by their shape, the shape being flat rigid (e.g. panel or plate).



References

Informative references

Attention is drawn to the following places, which may be of interest for search:

Flat articles	B29L 2007/00
Belts or bands	B29L 2029/00

B29C 48/08

flexible, e.g. films

Definition statement

This place covers:

The extrusion moulding articles characterised by their shape, the shape being flat flexible (e.g. sheet, foil, or film).



References

Informative references

Attention is drawn to the following places, which may be of interest for search:

Flat articles	B29L 2007/00
Films webs	B29L 2007/008
Belts or bands	B29L 2029/00

B29C 48/09

Articles with cross-sections having partially or fully enclosed cavities, e.g. pipes or channels

Definition statement

This place covers:

The extrusion moulding articles characterised by their shape, the shape being tubular rigid (e.g. one hole).



References

Informative references

Attention is drawn to the following places, which may be of interest for search:

Hollow articles	B29L 2022/00
Tubular articles	B29L 2023/00
Tubes or pipes, i.e. rigid	B29L 2023/22
Articles with hollow walls	B29L 2024/00

B29C 48/10

flexible, e.g. blown foils

Definition statement

This place covers:

The extrusion moulding articles characterised by their shape, the shape being tubular flexible (e.g. foil or film).



References

Informative references

Attention is drawn to the following places, which may be of interest for search:

Tubular articles	B29L 2023/00
Tubular films, sleeves	B29L 2023/001

B29C 48/11

comprising two or more partially or fully enclosed cavities, e.g. honeycomb-shaped

Definition statement

This place covers:

The extrusion moulding articles characterised by their shape, the shape being multi hole (e.g. honeycomb).

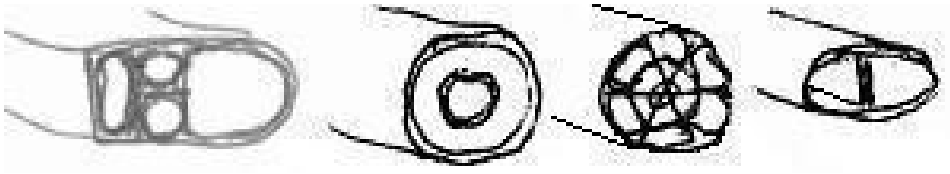

References

Informative references

Attention is drawn to the following places, which may be of interest for search:

Extruding ceramic honeycomb structures	B28B 2003/203
Producing honeycomb structures	B29D 99/0089
Multi-tubular articles	B29L 2031/60
Honeycomb	B29L 2031/608

B29C 48/12

Articles with an irregular circumference when viewed in cross-section, e.g. window profiles

Definition statement

This place covers:

The extrusion moulding articles characterised by their shape, the shape being irregular (e.g. non-flat or non-cylindrical).



References

Informative references

Attention is drawn to the following places, which may be of interest for search:

Articles having a profiled cross section	B29L 2031/003

B29C 48/13

Articles with a cross-section varying in the longitudinal direction, e.g. corrugated pipes

Definition statement

This place covers:

The extrusion moulding articles characterised by their shape, the shape being longitudinally irregular.

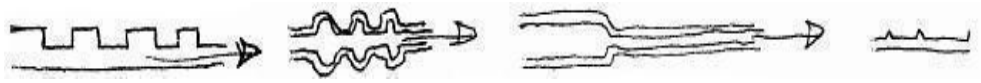

B29C 48/131

{Curved articles}

Definition statement

This place covers:

The extrusion moulding articles characterised by their shape, the shape being curved.

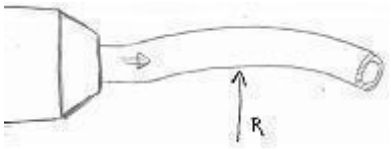

B29C 48/14

characterised by the particular extruding conditions, e.g. in a modified atmosphere or by using vibration

References

Informative references

Attention is drawn to the following places, which may be of interest for search:

Shaping conditions, e.g. vacuum	B29C 2791/004

B29C 48/142

{using force fields, e.g. gravity or electrical fields (B29C 48/9165 takes precedence)}

Definition statement

This place covers:

Vertical extrusion

References

Limiting references

This place does not cover:

Electrostatic pinning	B29C 48/9165

B29C 48/15

incorporating preformed parts or layers, e.g. extrusion moulding around inserts

References

Informative references

Attention is drawn to the following places, which may be of interest for search:

Relative movement between apparatus parts, e.g. moving die along preformed part to be coated	B29C 48/266
Thermal treatment of preformed parts	B29C 48/79
Applying material to surfaces	B05C 5/02
Applying material to a part of an article	B05C 5/0216

B29C 48/16

Articles comprising two or more components, e.g. co-extruded layers

References

Informative references

Attention is drawn to the following places, which may be of interest for search:

Feedblocks or adapter blocks	B29C 48/495

B29C 48/17

the components having different colours

References

Informative references

Attention is drawn to the following places, which may be of interest for search:

Applying surface layers, e.g. coatings, decorative layers	B29C 37/0025
Applying coating, colouring	B29D 11/00865, B29D 11/00894
Pigments, colouring agents	B29K 2105/0032
Materials having optical properties	B29K 2995/0018
Coloured articles	B29K 2995/002
Multi-coloured articles	B29K 2995/0021

B29C 48/175

{comprising a multi-coloured single component, e.g. striated, marbled or wood-like patterned}

Definition statement

This place covers:



B29C 48/18

the components being layers

Definition statement

This place covers:

Co-extrusion of several components, e.g. layers

References

Informative references

Attention is drawn to the following places, which may be of interest for search:

Incorporating preformed components	B29C 48/15
Dies for co-extrusion of multi-component articles	B29C 48/304, B29C 48/335
Flow dividers for layer multiplication	B29C 48/71
Plastic layered products	B29L 2009/00
Layered products	B32B 1/00 - B32B 33/00
Methods or apparatus for laminating	B32B 37/00

B29C 48/185

{comprising six or more components, i.e. each component being counted once for each time it is present, e.g. in a layer}

References

Informative references

Attention is drawn to the following places, which may be of interest for search:

Layer multiplication	B29C 48/71

B29C 48/19

the layers being joined at their edges

Definition statement

This place covers:

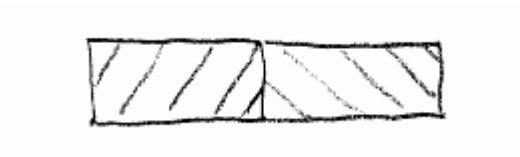

B29C 48/20

one of the layers being a strip, e.g. a partially embedded strip

Definition statement

This place covers:

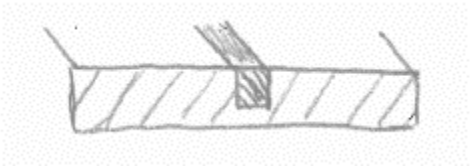

B29C 48/21

the layers being joined at their surfaces

Definition statement

This place covers:

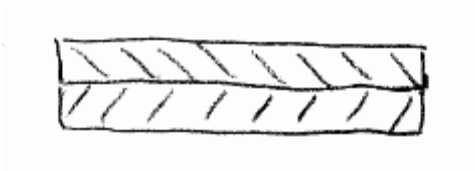

B29C 48/22

with means connecting the layers, e.g. tie layers or undercuts

References

Informative references

Attention is drawn to the following places, which may be of interest for search:

Mechanical anchoring in general, e.g. layers gripping to each other	B29C 37/0082
Anchoring between layers in general, e.g. due to chemical treatment	B29C 2045/1664
Tear strength in general, e.g. layers easily torn apart	B29K 2995/0081

B29C 48/23

with means for avoiding adhesion of the layers, e.g. for forming peelable layers

References

Informative references

Attention is drawn to the following places, which may be of interest for search:

Decreased tear strength	B29K 2995/0081

B29C 48/251

{Design of extruder parts, e.g. by modelling based on mathematical theories or experiments}

Definition statement

This place covers:

Extruder calculations, e.g. analytical or numerical, theory or experiments.

B29C 48/2519

{by modelling of mechanical strength}

Definition statement

This place covers:

For example, analytical or numerical

B29C 48/252

{Drive or actuation means; Transmission means; Screw supporting means}

References

Informative references

Attention is drawn to the following places, which may be of interest for search:

Drive means for presses	B30B 11/241
Gearings	F16H 1/22

B29C 48/2528

{Drive or actuation means for non-plasticising purposes, e.g. dosing unit}

Definition statement

This place covers:

For example, drives for conveyor unit or cutting unit

B29C 48/255

Flow control means, e.g. valves (flow dividers B29C 48/695)

Definition statement

This place covers:

Valves or adjustable parts, e.g. for changing flow direction, to change or modify the flow pattern or to throttle the flow.

References

Limiting references

This place does not cover:

Flow dividers	B29C 48/695

Informative references

Attention is drawn to the following places, which may be of interest for search:

Explicit throttling in general	B29C 48/268

B29C 48/256

{Exchangeable extruder parts (B29C 48/691 takes precedence)}

References

Limiting references

This place does not cover:

Arrangements for replacing filters	B29C 48/691

Informative references

Attention is drawn to the following places, which may be of interest for search:

Injection moulding exchanging the injection unit or parts thereof	B29C 45/176

B29C 48/2564

{Screw parts}

Definition statement

This place covers:

For example, modular screw parts

B29C 48/2565

{Barrel parts}

Definition statement

This place covers:

For example, modular barrel parts

B29C 48/2566

{Die parts}

Definition statement

This place covers:

For example, modular die parts

B29C 48/2567

{Hopper or feeder parts}

Definition statement

This place covers:

For example, modular hopper of feeder parts

B29C 48/2568

{Inserts}

Definition statement

This place covers:

Small parts, e.g. for changed flow pattern, changed extrudate shape, to throttle flow or replaceable parts due to wear

B29C 48/266

{Means for allowing relative movements between the apparatus parts, e.g. for twisting the extruded article or for moving the die along a surface to be coated}

Definition statement

This place covers:

Illustrative examples of subject matter classified in this place:

1.

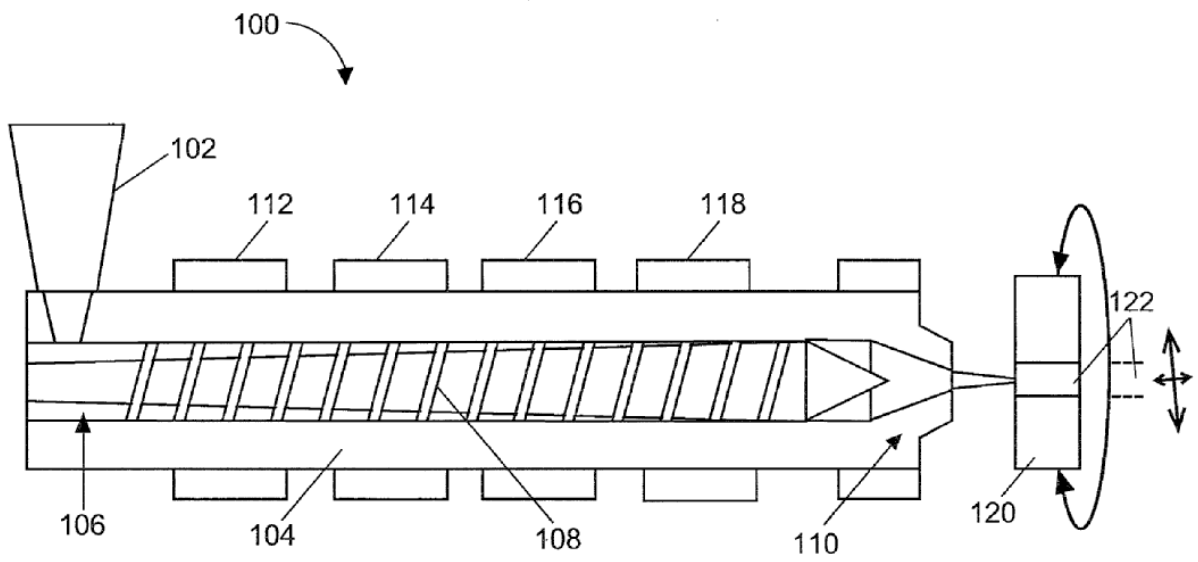

Figure 1 illustrates relative movement between die (120) and nozzle (110) for twisting the extruded article.

2.

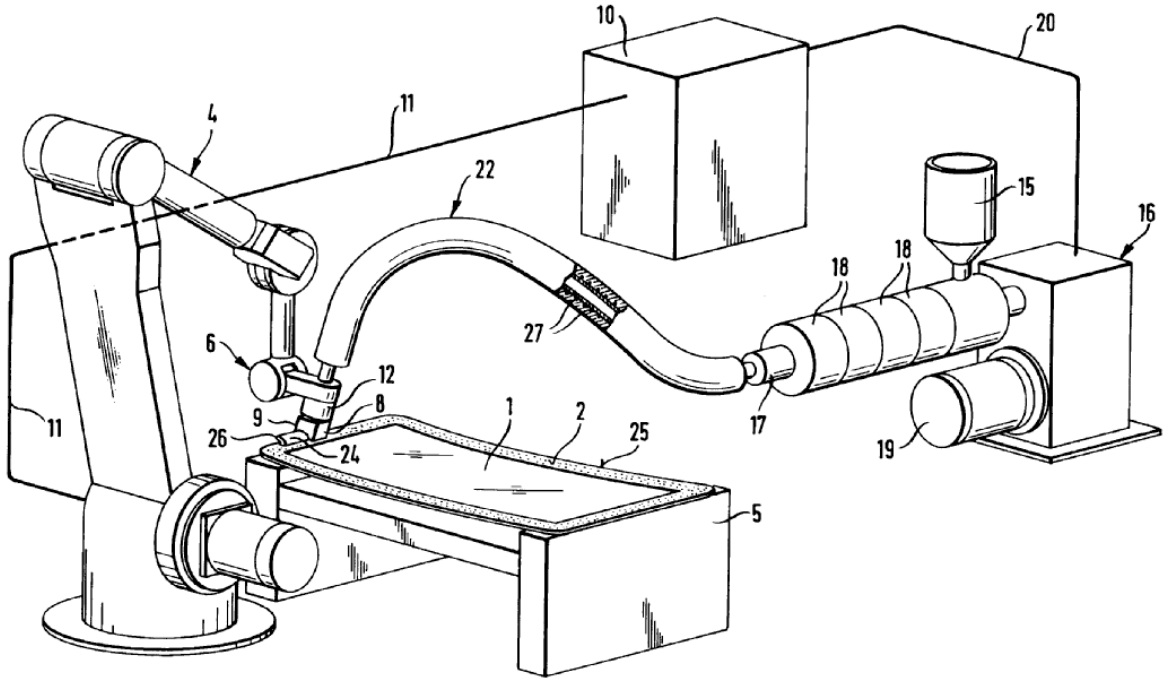

Figure 2 illustrates manipulation head (6) of robot (4), which moves extrusion nozzle (8) along edge of glass pane (1).

References

Informative references

Attention is drawn to the following places, which may be of interest for search:

Extruding onto a preformed part or component	B29C 48/15

B29C 48/268

{Throttling of the flow, e.g. for cooperating with plasticising elements or for degassing (flow control means B29C 48/255)}

Definition statement

This place covers:

Explicit throttling

References

Limiting references

This place does not cover:

Flow control means	B29C 48/255

Informative references

Attention is drawn to the following places, which may be of interest for search:

Throttling in mixers	B29B 7/488

B29C 48/2694

{Intermittent extrusion}

References

Informative references

Attention is drawn to the following places, which may be of interest for search:

Articles of definite length	B29C 2791/002

B29C 48/285

Feeding the extrusion material to the extruder

References

Informative references

Attention is drawn to the following places, which may be of interest for search:

Handling material to be moulded	B29C 31/02
Injection moulding, feeding	B29C 45/18
Conveying of bulk material	B65G 53/00

B29C 48/286

{Raw material dosing}

Definition statement

This place covers:

Raw material dosing in proximity to or during the feeding, e.g.

- handling and feeding pre-formed parts in the correct velocity
- handling and/or mixing materials in foreseen quantities and feeding these.

References

Informative references

Attention is drawn to the following places, which may be of interest for search:

Feeding in measured doses	B29C 31/06
Control aspects of volume	B29C 2948/92161, B29C 2948/92657
Control aspects of weight	B29C 2948/9218, B29C 2948/92676
Control aspects of dosing	B29C 2948/92333, B29C 2948/92828
Mixing, kneading	B29B 7/00
Making preforms	B29B 11/00
Weighing	G01G 13/00, G01G 19/22

B29C 48/287

{Raw material pre-treatment while feeding (B29C 48/78 takes precedence)}

Definition statement

This place covers:

Pre-treatment in proximity to or during feeding, e.g. drying or cleaning

References

Limiting references

This place does not cover:

Thermal treatment of the extrusion moulding material or of preformed parts or layers	B29C 48/78

Informative references

Attention is drawn to the following places, which may be of interest for search:

Conditioning of physical pre-treatment of a material to be shaped	B29C 31/00
Drying of half products, e.g. preforms	B29C 37/0092
Control aspects of pre-treatment	B29C 2948/92342, B29C 2948/92838
Conditioning or physical pre-treatment of a material to be shaped	B29B 13/00
Pre-treatment of a material to be shaped in general	B29B 15/00

B29C 48/288

{in solid form, e.g. powder or granules}

Definition statement

This place covers:

For example, feeding the main material in solid form

References

Informative references

Attention is drawn to the following places, which may be of interest for search:

Solid material	B29K 2105/25
Particle, powder, granule	B29K 2105/251

B29C 48/2883

{of preformed parts, e.g. inserts, retaining their shape during the extrusion process}

Definition statement

This place covers:

- Inserts fed and transported generally uninfluenced through the extruder, e.g. due to the high melting point of the insert material.
- Inserts fed directly to the die, e.g. for cable coating.

References

Informative references

Attention is drawn to the following places, which may be of interest for search:

Containing inserts	B29K 2105/20
Use of materials as reinforcements	B29K 2201/00 - B29K 2313/00
Use of materials as preformed parts, e.g. inserts	B29K 2601/00 - B29K 2713/00

Glossary of terms

In this place, the following terms or expressions are used with the meaning indicated:

preformed part	a part made of any material, being completely shaped to have a determined form and which is not used as a reinforcement, e.g. wires or nets forced only into the surface of an article
insert	a preformed part incorporated in an article during moulding

B29C 48/2886

{of fillers or of fibrous materials, e.g. short-fibre reinforcements}

References

Informative references

Attention is drawn to the following places, which may be of interest for search:

Moulding materials containing continuous reinforcements	B29K 2105/08
Moulding materials containing short length reinforcements	B29K 2105/12
Moulding materials containing fillers	B29K 2105/16
Use of materials as reinforcements	B29K 2201/00 - B29K 2313/00
Use of materials as fillers	B29K 2401/00 - B29K 2511/00

Glossary of terms

In this place, the following terms or expressions are used with the meaning indicated:

filler	a relatively inert substance in the form of particles, powder, beads, flakes or spheres, which improves the physical properties or increases the bulk or weight of an article
fibrous reinforcement	a reinforcement in the form of fibres

B29C 48/2888

{in thread form or in strip form, e.g. rubber strips}

Definition statement

This place covers:

- Feeding the extrusion material to the extruder in strip form, e.g. feeding rubber strips to extruders for producing multicomponent tyre treads or sidewalls.
- Feeding the extrusion material to the extruder in thread form, e.g. feeding welding wires or rods to welding extruders.

Illustrative examples of subject matter classified in this place:

1.

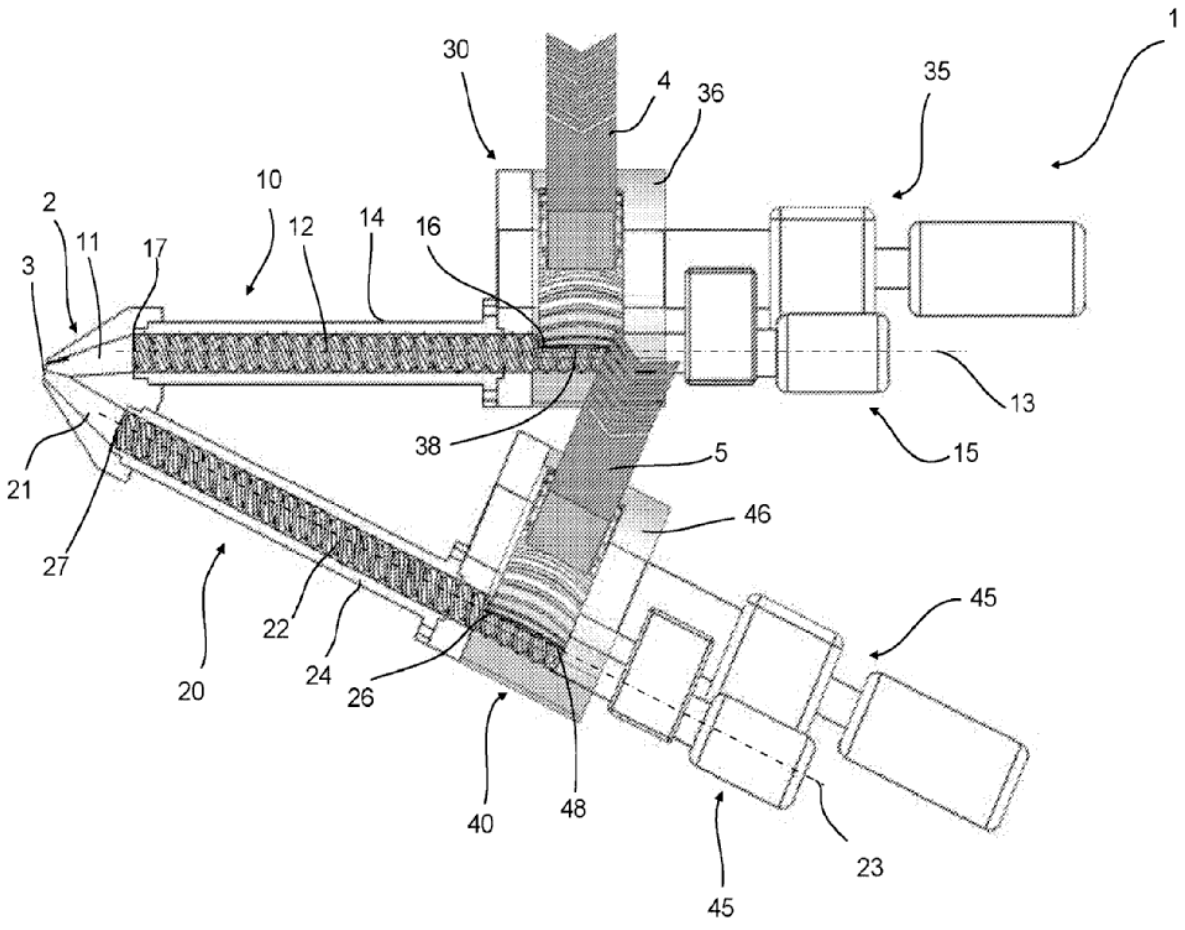

Strips (4, 5) are fed to extruders (10, 20) for producing a coextruded profiled element.

2.

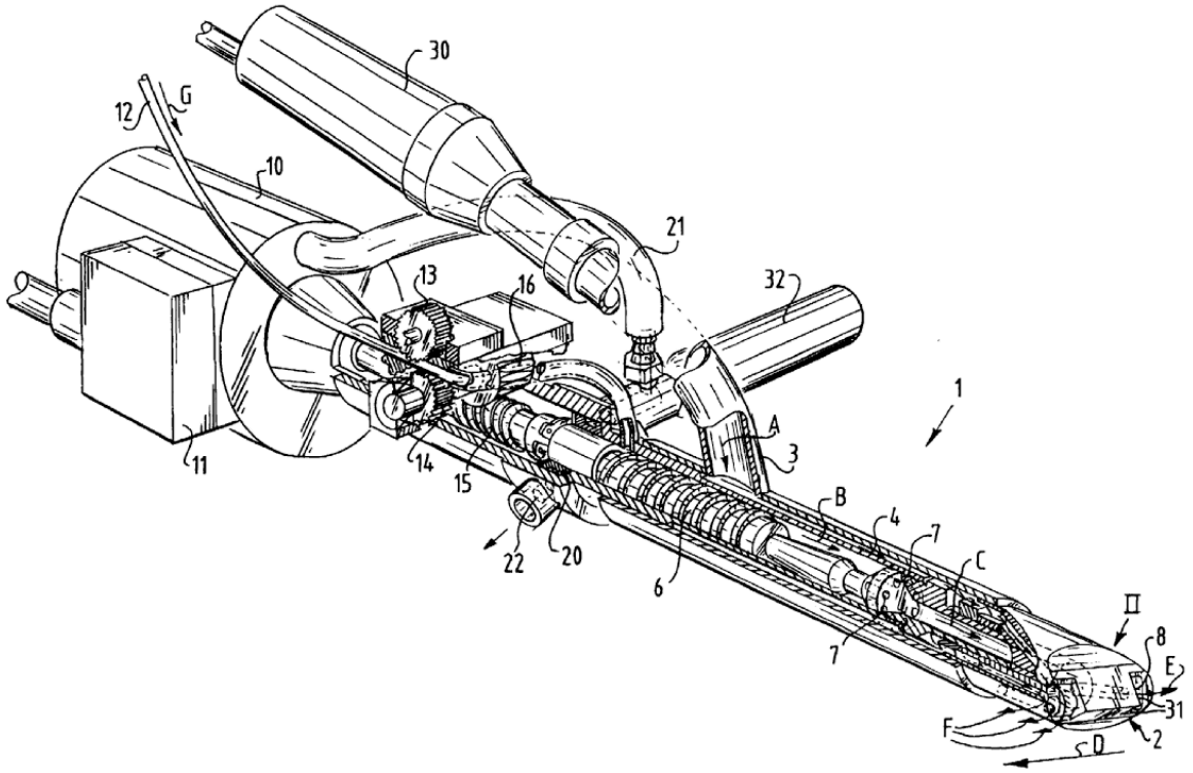

Plastic wire (12) is fed to extruder (1).

B29C 48/29

in liquid form

Definition statement

This place covers:

For example, feeding additives

References

Informative references

Attention is drawn to the following places, which may be of interest for search:

Plasticisers	B29K 2105/0038
Liquid or viscous moulding materials	B29K 2105/0058

B29C 48/295

in gaseous form

Definition statement

This place covers:

For example, feeding of blowing agents

References

Informative references

Attention is drawn to the following places, which may be of interest for search:

Moulding material in a gaseous state	B29K 2105/0055
Moulding material in plasma state	B29K 2105/0082

B29C 48/297

{at several locations, e.g. using several hoppers or using a separate additive feeding}

Definition statement

This place covers:

For example, using separate reinforcement feeding

B29C 48/3001

{characterised by the material or their manufacturing process}

Special rules of classification

Materials and coatings for calibrators are classified in the same groups as for dies, B29C 48/3001, B29C 48/3003

B29C 48/302

{being adjustable, i.e. having adjustable exit sections}

References

Informative references

Attention is drawn to the following places, which may be of interest for search:

Flow control means before the exit section	B29C 48/2556

Glossary of terms

In this place, the following terms or expressions are used with the meaning indicated:

Exit section	last part of die shaping the material

B29C 48/303

{using dies or die parts movable in a closed circuit, e.g. mounted on movable endless support (B29C 48/35 takes precedence)}

Definition statement

This place covers:

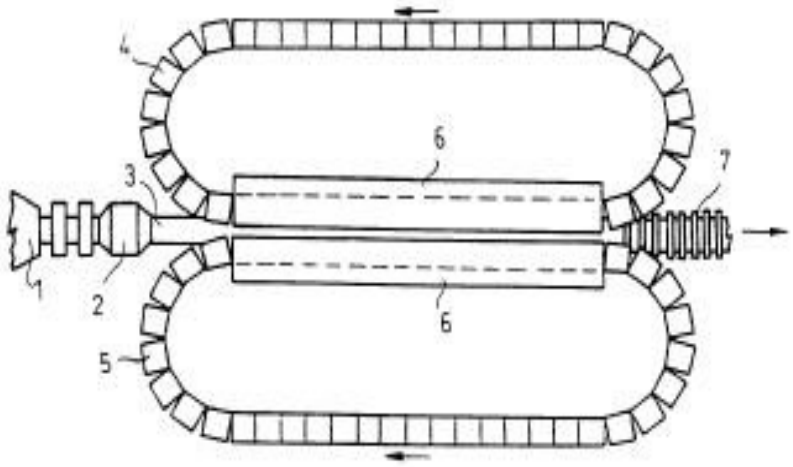

FIG. 1

References

Limiting references

This place does not cover:

Extrusion nozzles or dies with rollers	B29C 48/35

Informative references

Attention is drawn to the following places, which may be of interest for search:

Continuously moving moulds in general	B29C 33/36
Casting between endless belts	B29C 39/16
Compression moulding between endless belts	B29C 43/228
Foaming between endless belts	B29C 44/30
Blow moulding of articles of indefinite length using moulds movable in closed circuit	B29C 49/0021
Blow moulding using moulds mounted on movable endless supports	B29C 49/38

B29C 48/304

{specially adapted for bringing together components, e.g. melts within the die}

References

Informative references

Attention is drawn to the following places, which may be of interest for search:

Co-extrusion of multi-component articles	B29C 48/18

B29C 48/305

having a wide opening, e.g. for forming sheets

Definition statement

This place covers:

For example, extrusion dies for panels or plates

B29C 48/307

{specially adapted for bringing together components, e.g. melts within the die}

References

Informative references

Attention is drawn to the following places, which may be of interest for search:

Co-extrusion of multi-component articles	B29C 48/18

B29C 48/31

{being} adjustable {, i.e. having adjustable exit sections}

References

Informative references

Attention is drawn to the following places, which may be of interest for search:

Flow control means before the exit section	B29C 48/2556

Glossary of terms

In this place, the following terms or expressions are used with the meaning indicated:

Exit section	last part of die shaping the material

B29C 48/325

{being} adjustable {, i.e. having adjustable exit sections}

References

Informative references

Attention is drawn to the following places, which may be of interest for search:

Flow control means before the exit section	B29C 48/2556

Glossary of terms

In this place, the following terms or expressions are used with the meaning indicated:

Exit section	last part of die shaping the material

B29C 48/335

Multiple annular extrusion nozzles in coaxial arrangement, e.g. for making multi-layered tubular articles

References

Informative references

Attention is drawn to the following places, which may be of interest for search:

Co-extrusion of multi-component articles	B29C 48/18

B29C 48/34

Cross-head annular extrusion nozzles, i.e. for simultaneously receiving moulding material and the preform to be coated

Definition statement

This place covers:

Side feeding the nozzle, i.e. nozzle axis not on the extruder axis, but normally perpendicular to it or at an angle

B29C 48/345

Extrusion nozzles comprising two or more adjacently arranged ports, for simultaneously extruding multiple strands, e.g. for pelletising

Definition statement

This place covers:

Multiple separate nozzle outlets next to each other.

References

Informative references

Attention is drawn to the following places, which may be of interest for search:

Extrusion of particle, powder, granular shapes	B29C 48/04
Extrusion of filamentary shapes	B29C 48/05
Extrusion followed by under-water pelletizing	B29B 9/065
Producing filamentary material	B29D 99/0078
Electro spinning	D01D 5/00
Melt blowing	D04H 1/54

Special rules of classification

Pure melt-extrusion where the filaments are not shaped/formed by extrusion through the die but with other extrusion aspects should be allocated the Indexing Code B29C 48/00, but not an inventive or additional classification in B29C 48/345 for this aspect.

B29C 48/35

with rollers

Definition statement

This place covers:

Rollers shape the material exiting the extruder nozzle - normally nozzle exit at a roller or between rollers

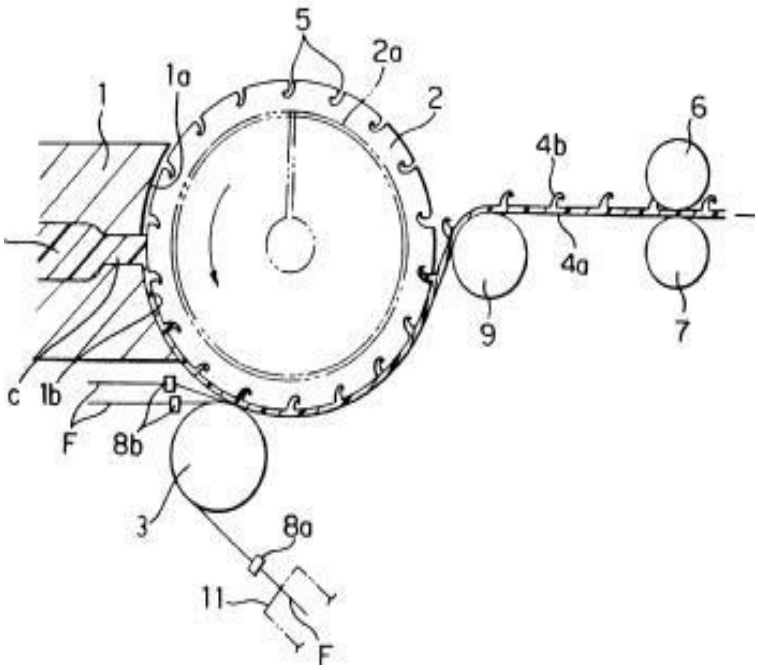

References

Informative references

Attention is drawn to the following places, which may be of interest for search:

Calendering	B29C 43/24

B29C 48/36

Means for plasticising or homogenising the moulding material or forcing it through the nozzle or die

References

Informative references

Attention is drawn to the following places, which may be of interest for search:

Means for plasticising or homogenising in injection moulding	B29C 45/46

B29C 48/37

Gear pumps

References

Informative references

Attention is drawn to the following places, which may be of interest for search:

Gear pumps	F04C 2/08

B29C 48/375

Plasticisers, homogenisers or feeders comprising two or more stages

Definition statement

This place covers:

For example, one plasticiser after the other

B29C 48/38

using two or more serially arranged screws in the same barrel

References

Informative references

Attention is drawn to the following places, which may be of interest for search:

Multi stage plasticising using separate plasticisers, e.g. screw extruder followed by a gear pump	B29C 48/375
Mixers with consecutive casings or screws	B29B 7/487

B29C 48/387

{using a screw extruder and a gear pump}

References

Informative references

Attention is drawn to the following places, which may be of interest for search:

Injection moulding using screws and injection ram or piston	B29C 45/54

B29C 48/39

a first extruder feeding the melt into an intermediate location of a second extruder

Definition statement

This place covers:

Feeding a plasticised melt into another plasticised melt, e.g. feeding one plasticised melt into the middle of an extruder plasticising another melt.

References

Informative references

Attention is drawn to the following places, which may be of interest for search:

Feeding of the raw material to be extruded	B29C 48/285

B29C 48/395

using screws surrounded by a cooperating barrel, e.g. single screw extruders

Definition statement

This place covers:

Screws or worms that transport, melt, mix and pump the material out through the nozzle and where the interaction between barrel to screw or screw to screw is important.

References

Informative references

Attention is drawn to the following places, which may be of interest for search:

Means for plasticising or homogenising using screws in injection moulding	B29C 45/47
Design, e.g. calculations, experiments or theory, e.g. for intermeshing screws, mechanical strength or flow	B29C 48/251 - B29C 48/2519
Flow control by valves	B29C 48/2552
Explicit throttling	B29C 48/268
Cleaning or purging	B29C 48/2715
Screws	B29C 48/505
Screw elements, i.e. element shapes affecting flow	B29C 48/51 - B29C 48/67

Barrels	B29C 48/68
Venting	B29C 48/766
Heating or cooling at plasticising zone	B29C 48/80
Handheld extruders	B05C 17/00
Mixers with screw or helix	B29B 7/42
Presses using screws or worms	B30B 11/24

B29C 48/40

using two or more parallel screws {or at least two parallel non-intermeshing screws}, e.g. twin screw extruders

References

Informative references

Attention is drawn to the following places, which may be of interest for search:

Mixers with two or more intermeshing devices	B29B 7/46

B29C 48/42

Non-identical or non-mirrored screws

Definition statement

This place covers:

For example, the screws having differing lengths or different screw element types

B29C 48/425

using three or more screws (serially arranged screws B29C 48/38, B29C 48/385)

Definition statement

This place covers:

For example, screws arranged next to each other in a circular configuration

References

Limiting references

This place does not cover:

Plasticizers, homogenisers or feeders using two or more serially arranged screws	B29C 48/38, B29C 48/385

Informative references

Attention is drawn to the following places, which may be of interest for search:

Mixers with three or more screws	B29B 7/485

B29C 48/435

Sub-screws

References

Informative references

Attention is drawn to the following places, which may be of interest for search:

Mixers with three or more screws	B29B 7/485

B29C 48/45

Axially movable screws

References

Informative references

Attention is drawn to the following places, which may be of interest for search:

Axially movable screws in injection moulding	B29C 45/50

B29C 48/46

using vanes

References

Informative references

Attention is drawn to the following places, which may be of interest for search:

Roller extrusion nozzles	B29C 48/35

B29C 48/475

using pistons, accumulators or press rams

References

Informative references

Attention is drawn to the following places, which may be of interest for search:

Injection moulding using screws and injection ram or piston	B29C 45/54

B29C 48/49

using two or more extruders to feed one die or nozzle

Definition statement

This place covers:

For example, means to combine melt flows, e.g. using adapter blocks.

References

Informative references

Attention is drawn to the following places, which may be of interest for search:

General arrangement or layout of extrusion plants	B29C 48/025

B29C 48/501

{Extruder feed section}

Definition statement

This place covers:

Constructional details of the section of the extruder that is located around the inlet of material, details of cylinder or screw in that particular location.

B29C 48/503

{Extruder machines or parts thereof characterised by the material or by their manufacturing process (B29C 48/256 takes precedence)}

Definition statement

This place covers:

For example, first time assembly

For example, cooling a barrel lining and inserting it into the barrel

References

Limiting references

This place does not cover:

Exchangeable extruder parts	B29C 48/256

Informative references

Attention is drawn to the following places, which may be of interest for search:

Moulds characterised by the manufacturing process	B29C 33/3842
Manufacturing dies	B23P 15/00
Use of materials as mould material	B29K 2801/00 - B29K 2913/00

B29C 48/505

Screws

Definition statement

This place covers:

Details of the construction and layout of the screw.

References

Informative references

Attention is drawn to the following places, which may be of interest for search:

Means for plasticising or homogenising using screws in injection moulding	B29C 45/47
Injection moulding, details, screws	B29C 45/60
Design, e.g. calculations, experiments or theory, e.g. for intermeshing screws, mechanical strength or flow	B29C 48/251 - B29C 48/2519
Drives, screw supports, bearings	B29C 48/2522
Flow control by valves	B29C 48/2552
Mounting or handling of screws	B29C 48/2561
Exchangeable screw parts or segments, e.g. modular screws	B29C 48/2564
Inserts, i.e. small exchangeable parts, e.g. for replacement due to wear	B29C 48/25682
Explicit throttling	B29C 48/268
Cleaning or purging of screws	B29C 48/2715
Feeding, e.g. blowing agents, through a screw	B29C 48/298
Screw elements, i.e. element shapes affecting flow	B29C 48/51 - B29C 48/67
Venting through the screw	B29C 48/766
Heating or cooling screws	B29C 48/80
Screws for mixers	B29B 7/42 - B29B 7/48
Presses using screws or worms	B30B 11/24
Details of the screws of screw conveyors	B65G 33/26

B29C 48/515

for auxiliary fluids, e.g. foaming agents

References

Informative references

Attention is drawn to the following places, which may be of interest for search:

Thermal treatment of the extrusion moulding material or of preformed parts or layers, e.g. by heating or cooling	B29C 48/78
Thermal treatment of the stream of extruded material, e.g. cooling	B29C 48/88

B29C 48/59

characterised by details of the thread, i.e. the shape of a single thread of the material-feeding screw

Definition statement

This place covers:

For example, openings, interruptions or changing thread thickness

B29C 48/625

characterised by the ratio of the threaded length of the screw to its outside diameter [L/D ratio]

Definition statement

This place covers:

For example, section length L/D

B29C 48/63

having sections without mixing elements or threads, i.e. having cylinder shaped sections

References

Informative references

Attention is drawn to the following places, which may be of interest for search:

With discontinuous threads	B29C 48/605

B29C 48/68

Barrels or cylinders

References

Informative references

Attention is drawn to the following places, which may be of interest for search:

Injection moulding, details, barrels or cylinders	B29C 45/62

B29C 48/685

characterised by their inner surfaces, e.g. having grooves, projections or threads

Definition statement

This place covers:

Irregular inner surfaces being not simple cylindrical or conical surfaces

B29C 48/69

Filters or screens for the moulding material

Definition statement

This place covers:

Filters to prevent contaminants in the melt from reaching the nozzle and ending up in the finished product

References

Informative references

Attention is drawn to the following places, which may be of interest for search:

Injection moulding cleaning equipment	B29C 45/24
Sealings for filters	B29C 48/2545
Flow control, e.g. valves in proximity to filters	B29C 48/2554
Cleaning or purging	B29C 48/2725
Filters in general	B01D 29/00
Changing filters	B01D 35/12
Filtering liquids in general	B01D 39/00
Condition, form or state of moulded materials, containing impurities	B29K 2105/065

B29C 48/70

comprising means for dividing, distributing and recombining melt flows

Definition statement

This place covers:

Divided melts merging before the die zone

References

Informative references

Attention is drawn to the following places, which may be of interest for search:

Static mixers, e.g. breaker plates in the end of the plastizising unit	B29C 48/362
Non-actuated dynamic mixing devices, e.g. free rotating mixing elements	B29C 48/363
Flow division and recombination for layer multiplication	B29C 48/71

B29C 48/705

{in the die zone, e.g. to create flow homogeneity}

Definition statement

This place covers:

Divided melts merging in the die zone

References

Informative references

Attention is drawn to the following places, which may be of interest for search:

Flow division and recombination for layer multiplication	B29C 48/71

B29C 48/72

Feedback means, i.e. part of the molten material being fed back into upstream stages of the extruder

Definition statement

This place covers:

Melt flow feed-back means, i.e. a part of the melt is fed back into the extruder line when still molten

References

Informative references

Attention is drawn to the following places, which may be of interest for search:

Feed-back in the sense of measuring/controlling/regulating	B29C 48/92

B29C 48/74

Bypassing means, i.e. part of the molten material being diverted into downstream stages of the extruder

Definition statement

This place covers:

Part of the melt by-passes a part of the extruder to re-enter at a later stage

B29C 48/76

Venting {, drying} means; Degassing means

Definition statement

This place covers:

Steam, gas or vapour arising during heating and melting of the material is let out of the extruder in a controlled manner

References

Informative references

Attention is drawn to the following places, which may be of interest for search:

Venting or degassing means during injection moulding	B29C 45/63
Flow control by valves	B29C 48/2552
Explicit throttling	B29C 48/268
Venting or degassing during mixing or kneading	B29B 7/84

B29C 48/762

{Vapour stripping}

Definition statement

This place covers:

Removing a component, e.g. by adding a second component binding to the first component

B29C 48/763

{Vent constructions, e.g. venting means avoiding melt escape}

Definition statement

This place covers:

For example, means for improving venting

B29C 48/765

{in the extruder apparatus}

Definition statement

This place covers:

For example, venting of the melt in a gear pump or in a separate venting chamber

B29C 48/766

{in screw extruders}

Definition statement

This place covers:

For example, venting through a screw, a screw bearing or a feed inlet

B29C 48/78

Thermal treatment of the extrusion moulding material or of preformed parts or layers, e.g. by heating or cooling

References

Informative references

Attention is drawn to the following places, which may be of interest for search:

Raw material pretreatment	B29C 48/287
Conditioning or physical pre-treatment of a material to be shaped	B29B 13/00
Pre-treatment of a material to be shaped in general	B29B 15/00

B29C 48/875

for achieving a non-uniform temperature distribution, e.g. using barrels having both cooling and heating zones

Definition statement

This place covers:

Thermal treatment of the extrusion moulding material or of preformed parts or layers to obtain a non-uniform temperature distribution.

B29C 48/88

Thermal treatment of the stream of extruded material, e.g. cooling

Definition statement

This place covers:

Heating or cooling of the material having left the extruder nozzle

B29C 48/885

External treatment, e.g. by using air rings for cooling tubular films

Special rules of classification

External cooling of hollow articles is classified by allocating the CPC symbols B29C 48/885 and B29C 48/9115.

External cooling of tubular films is classified by allocating the CPC symbols B29C 48/885 and B29C 48/912.

B29C 48/89

Internal treatment, e.g. by applying an internal cooling fluid stream

Special rules of classification

Internal cooling of hollow articles is classified by allocating the CPC symbols B29C 48/89 and B29C 48/9115.

Internal cooling of tubular films is classified by allocating the CPC symbols B29C 48/89 and B29C 48/912.

B29C 48/90

with calibration or sizing, i.e. combined with fixing or setting of the final dimensions of the extruded article

Definition statement

This place covers:

Finalising shaping of the article while cooling takes place to correct for warp and shrinking

B29C 48/902

{internally}

References

Informative references

Attention is drawn to the following places, which may be of interest for search:

Shaping by stretching of blown tubular films using internal mechanical means, e.g. mandrel	B29C 55/285

B29C 48/914

{Cooling drums}

References

Informative references

Attention is drawn to the following places, which may be of interest for search:

Moulds and cores with heating or cooling means in rolls, calenders or drums	B29C 33/044

B29C 48/919

{using a bath, e.g. extruding into an open bath to coagulate or cool the material}

Definition statement

This place covers:

For example, using a bath for coagulatable material

B29C 48/92

Measuring, controlling or regulating

References

Informative references

Attention is drawn to the following places, which may be of interest for search:

Design of extruder parts, e.g. by modelling based on mathematical theories or experiments	B29C 48/251
Measuring, controlling or regulating in general	G01
Taking samples	G01N 1/2035
Adaptive control, learning, e.g. fuzzy logic	G05B 13/0265

Special rules of classification

For all documents to be classified in B29C 48/92 for inventive or additional information, all measuring and controlling aspects therein must be identified by adding the relevant codes in the B29C 2948/92 indexing scheme.

In case of classification in the B29C 2948/92 indexing scheme, the allocation of B29C 48/92 as additional information is optional.

B29C 48/94

Lubricating

Definition statement

This place covers:

Using internal lubrication, e.g. adding a plasticiser, or using external lubrication, e.g. adding a film of lubricating material in the interface between the melt and the extruder, die, calibrator or conveyor.

References

Informative references

Attention is drawn to the following places, which may be of interest for search:

Lubricating for moulds or cores in general	B29C 33/56
Lubricating means for injection moulding	B29C 45/83
Moulding materials containing plasticisers	B29K 2105/0038
Liquid or viscous moulding materials	B29K 2105/0058
Moulding materials having a particular viscosity	B29K 2105/0094

Special rules of classification

Materials and coatings for calibrators are classified in the same groups as for dies, B29C 48/3001, B29C 48/3003

B29C 48/95

by adding lubricant to the moulding material

References

Informative references

Attention is drawn to the following places, which may be of interest for search:

Lubricating compositions	C10M

B29C 49/00

Blow-moulding, i.e. blowing a preform or parison to a desired shape within a mould; Apparatus therefor

Definition statement

This place covers:

Blow-moulding methods, blow-moulding apparatus and articles obtained by blow-moulding, when these articles are characterised by the blow-moulding method.

Simulation of blow-moulding or any other simulated aspect related to blow-moulding, e.g. simulating heating a preform before blow-moulding. This aspect is covered in the group B29C 49/42398.

References

Informative references

Attention is drawn to the following places, which may be of interest for search:

Injection a fluid, e.g. air, in molten plastic in injection moulding	B29C 45/1704
Extrusion moulding of tubular films	B29C 48/10
Vacuum or pressure forming of sheet like materials	B29C 51/10
Enlarging tube ends using pressure difference	B29C 57/08
Making of balloon catheters	A61M 25/1027
Metal blow-moulding	B21D 26/00
Making preforms per se	B29B 11/00
Packaging individual articles in containers or receptacles whereby the machines incorporate means for making the containers	B65B 3/022
Labelling of blow-moulded articles outside the mould	B65C 3/00
Glass blow-moulding	C03B 9/00

Special rules of classification

For articles and materials, as much as possible additional classification by adding the Indexing Codes of B29K and B29L is recommended.

If more than 4 different thermoplastic materials are described in the disclosure, then the Indexing Code B29K 2101/12 should be allocated. In addition, only up to 4 of the disclosed uncommon thermoplastic materials are classified (common thermoplastics for blow-moulding are PET, PE, PP) by allocating the appropriate Indexing Code as provided in B29K 2001/00 - B29K 2101/00.

Inventive and additional information disclosed in documents to be classified should be identified by allocation the appropriate classification codes of B29C 49/00 - B29C 49/78. In particular attention should be paid to the so called break down Indexing Codes, which are only present at additional information level, but should be allocated if applicable.

If during blow-moulding also vacuum is used, or only vacuum is used for deformation of the tubular parison then one or both of the following classification codes are additionally allocated: B29C 2791/006 and/or B29C 2791/007.

The indexing of preforms for blow-moulding bottles using the coding scheme under B29C 2949/07 is obligatory when the structure of the preform differs from the conventional shape (one layer, open neck, flange, cylindrical body, closed semi-spherical end).

Glossary of terms

In this place, the following terms or expressions are used with the meaning indicated:

Preform or parison	A tubular object obtained by moulding substantially consisting of plastic material, which has to undergo an additional processing step, e.g. blow-moulding, to obtain its final shape, examples are: tubes, extruded parisons, two parallel sheets which behave like tubular preforms, injection moulded tubular preforms normally with one end closed.
Blowing	using a pressurized blowing gas to deform the tubular preform or parison; but also applying a vacuum on one side of the tubular article, since the ambient pressure is deforming the tubular preform or parison.

B29C 49/0005

{characterised by the material}

Definition statement

This place covers:

- Blow moulding processes, whereby their disclosure focuses on the materials or material parameters

References

Informative references

Attention is drawn to the following places, which may be of interest for search:

Compostions of macromolecular compounds in general	C08L 1/00 - C08L 101/10

Special rules of classification

If reinforcing material is comprised in the material to be thermoformed, then the following Indexing Codes should additionally be allocated: the appropriate subgroups of B29K 2105/06 and B29K 2201/00 - B29K 2313/00.

B29C 49/0006

{for heating or cooling}

Definition statement

This place covers:

Modification or selection of the moulding material to facilitate heating or cooling.

B29C 49/0015

{Making articles of indefinite length, e.g. corrugated tubes}

Definition statement

This place covers:

- WO02/36333

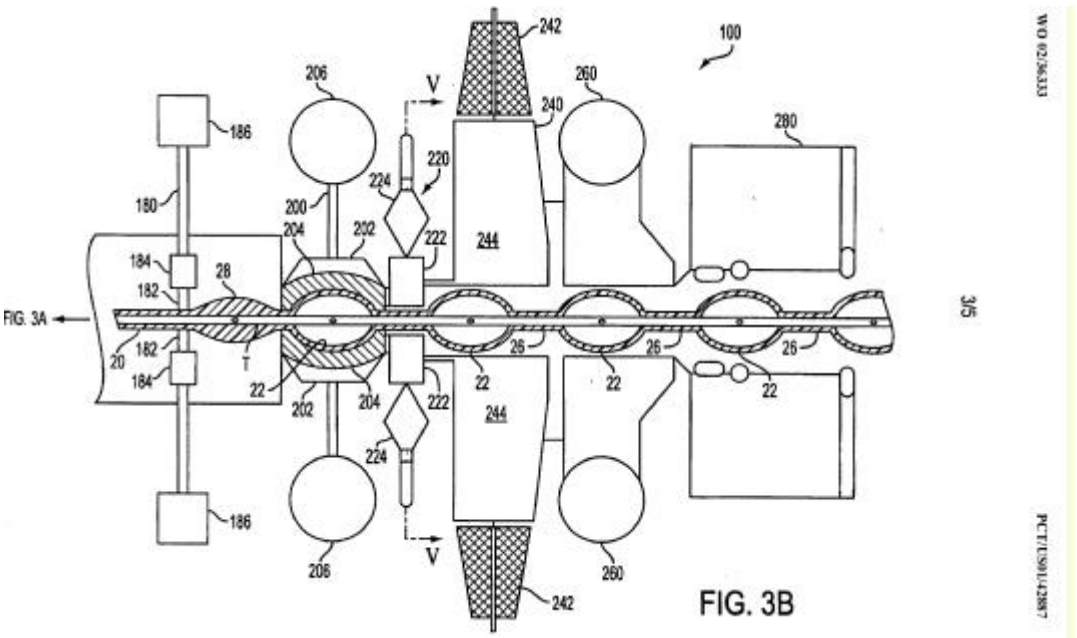

B29C 49/0021

{using moulds or mould parts movable in a closed path, e.g. mounted on movable endless supports}

Definition statement

This place covers:

- Blow moulding processes whereby either only pressure, pressure and vacuum or only vacuum is used during the forming process of indefinite length articles, as long as the preform is three dimensionally deformed.

- WO2004110734

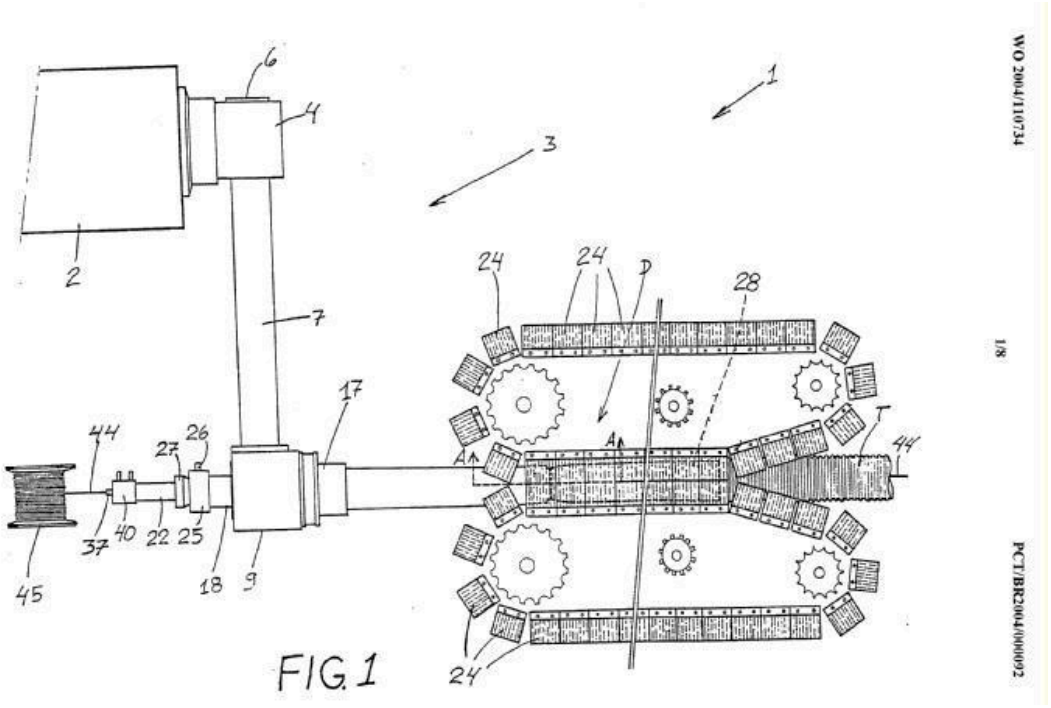

Special rules of classification

It is highly desirable that all documents classified in B29C 49/0021 the appropriate Indexing Code in B29L 2023/00 is added to identify the type of tubular product

B29C 49/0022

{characterised by mould return means}

Definition statement

This place covers:

Details of the device to return the moulding section to a receiving portion of the parison.

B29C 49/0023

{using adjustable machine tables, e.g. to align extrusion nozzles with the moulds}

Definition statement

This place covers:

Relative movement of the mould table or support of the extrusion nozzle for alignment of the apparatus.

B29C 49/0024

{using varying mould speed}

Definition statement

This place covers:

Modification of the mould speed to account for changes in mould geometry or extrudate thickness. Usually to form a product having uniform thickness.

B29C 49/0025

{subsequent mould cavities being different, e.g. for making bells}

Definition statement

This place covers:

Indefinite length moulding apparatus which has cavities of different configurations along the mould path.

Illustrative example of subject matter classified in this group:

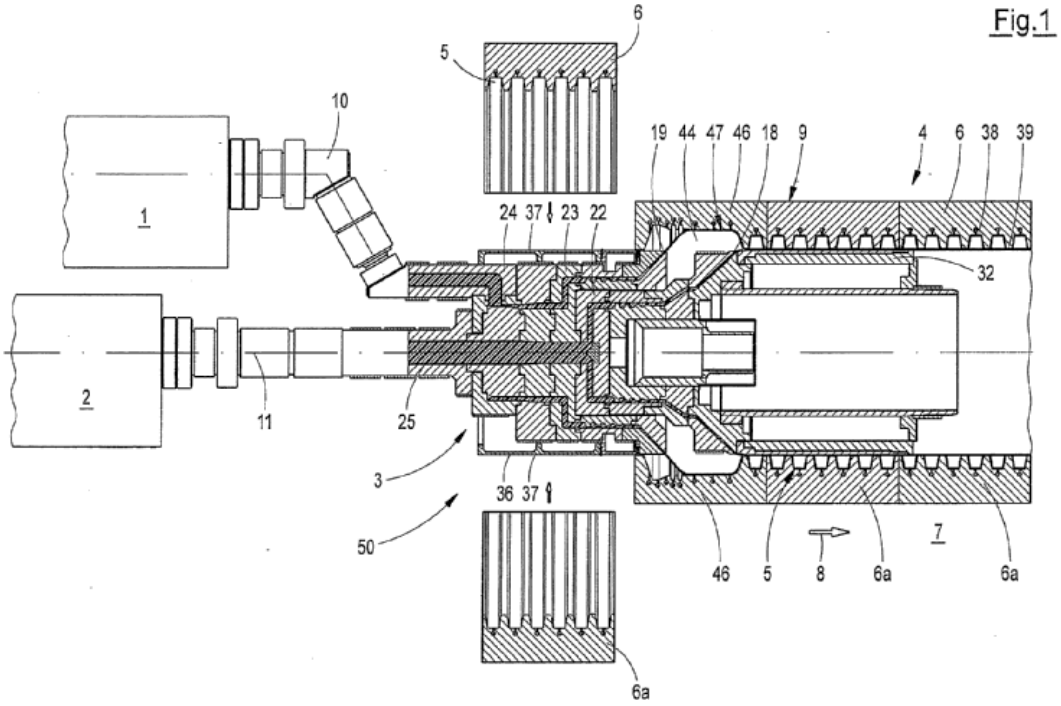

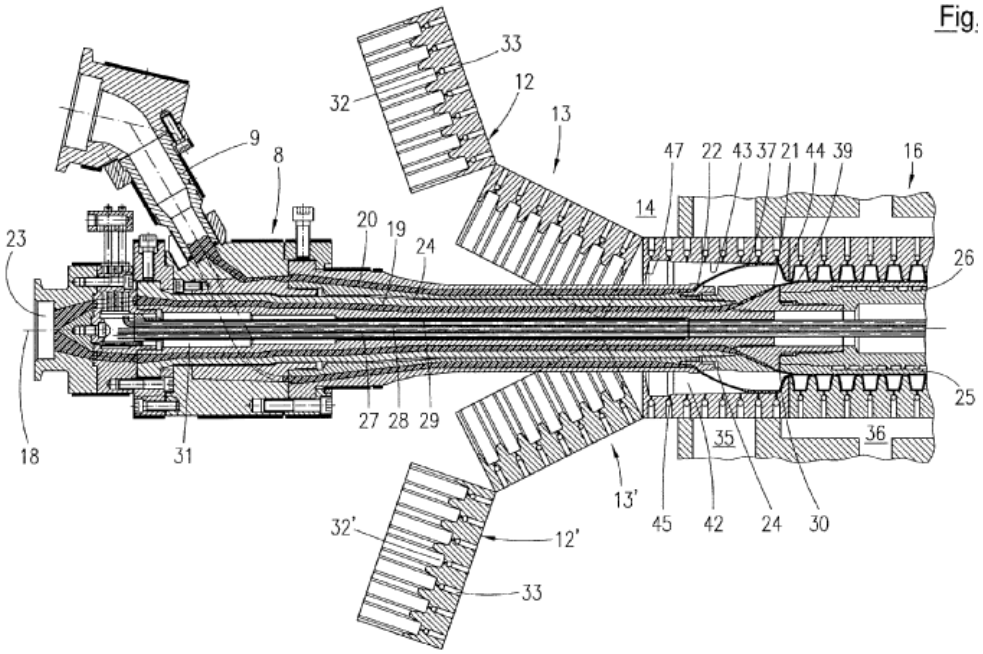

B29C 49/0027

{involving the change of moulds, e.g. in production processes without interrupting the production processes}

Definition statement

This place covers:

Using an auxiliary device, e.g. conveyor, to change the moulds without pausing the moulding apparatus.

B29C 49/0028

{using variable forming length, e.g. adapted to cooling needs}

Definition statement

This place covers:

Indefinite length moulding apparatus whose length can be varied according to desired process conditions or outcomes (e.g. cooling).

Illustrative example of subject matter classified in this group:

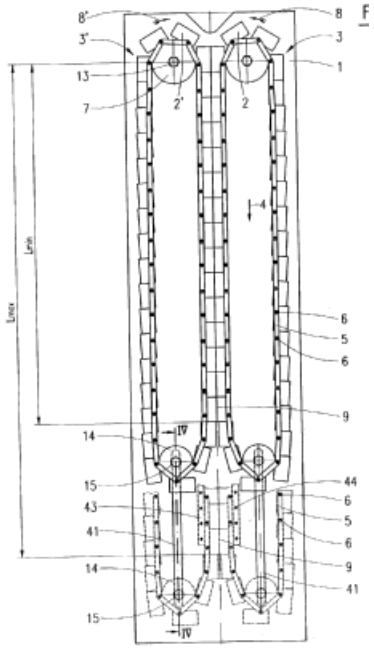

B29C 49/0029

{wherein the process is characterised by the pressure used, e.g. using varying pressure depending on sequence of cavity shapes}

Definition statement

This place covers:

Indefinite length moulding apparatus which uses varying/controlled pressure in the moulding process.

B29C 49/003

{wherein the process is characterised by temperature conditioning, e.g. using inside cooling by air}

Definition statement

This place covers:

Indefinite length moulding apparatus which involves various temperature conditioning techniques (e.g. interior cooling air). Examples include cooling of fused layers and details of the internal cooling plug.

B29C 49/0031

{Making articles having hollow walls}

Definition statement

This place covers:

- JP60149432

第 1 図

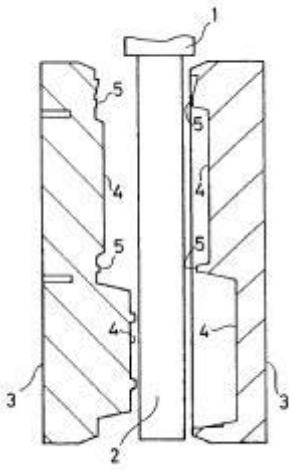

第 2 図

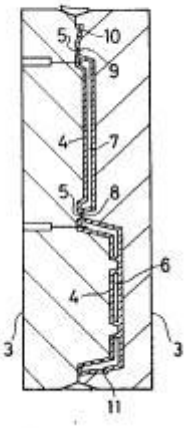

References

Informative references

Attention is drawn to the following places, which may be of interest for search:

Hollow walled articles	B29L 2024/00

B29C 49/0042

{without using a mould (B29C 49/1602 takes precedence)}

Definition statement

This place covers:

Illustrative example of subject matter classified in this group:

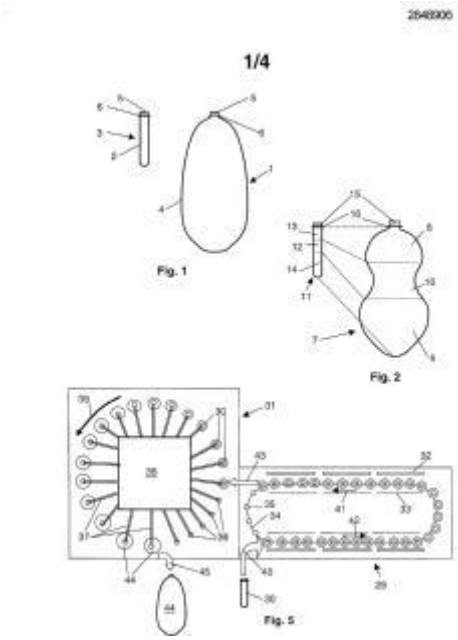

References

Limiting references

This place does not cover:

Pre-blowing without using a mould	B29C 49/1602

B29C 49/006

{Blow-moulding plants, e.g. using several blow-moulding apparatuses cooperating}

Definition statement

This place covers:

A combination of different apparatus to form a single blow-moulding plant. More than just extrusion or injection moulding combined with blow-moulding, could also be more than one blow-mould or other moulding apparatus.

B29C 49/0062

{using two or more parallel stations, e.g. two parallel heating or blowing stations}

Definition statement

This place covers:

A plant wherein the plurality of stations are parallel to one another.

B29C 49/0064

{the number of preform manufacturing stations being different to the number of blowing stations}

Definition statement

This place covers:

Blow-moulding plants that have preform manufacturing segments and blow-moulding segments which are not equal in number.

In the example below the injection mould has 32 cavities and the blow-mould has 4 cavities.

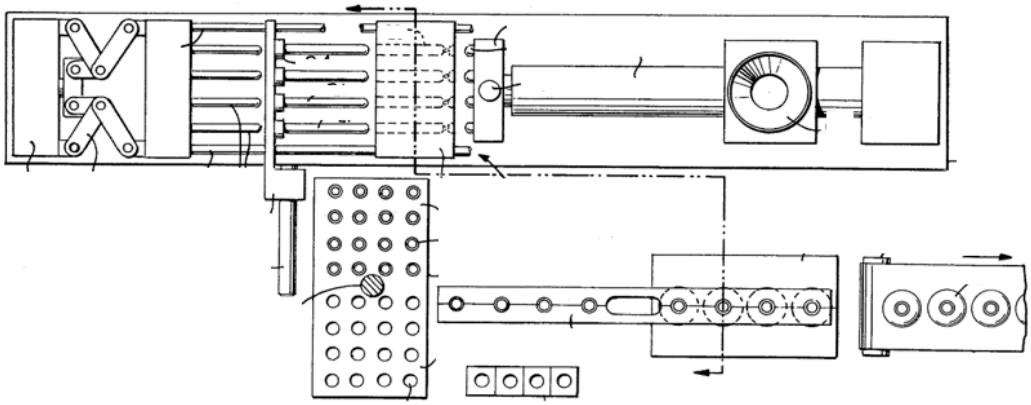

B29C 49/0208

{joining several separate preforms while blow-moulding, e.g. two cylindrical preforms welded together during blowing}

Definition statement

This place covers:

Manufacturing process which includes both preform manufacture and blow-moulding of the preform, especially including manufacturing more than one distinct preforms and joining them together during blow-moulding.

Illustrative example of subject matter classified in this group:

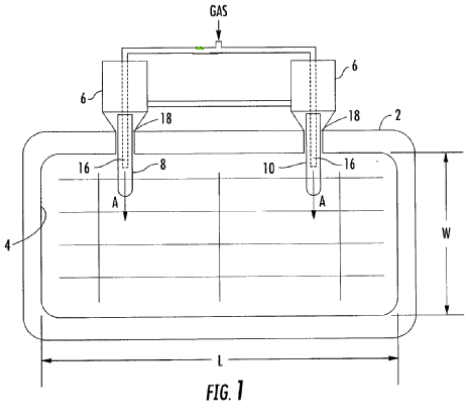

FIG. 1

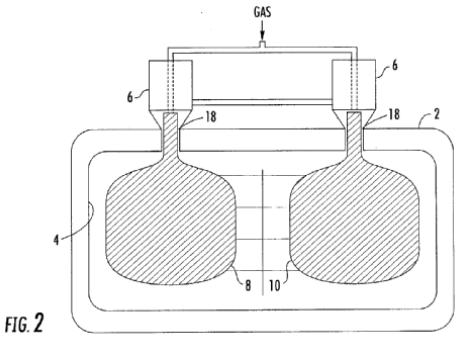

FIG. 2

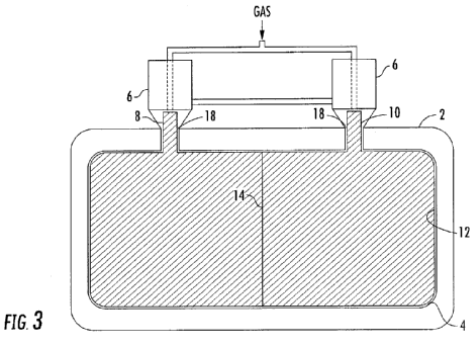

FIG. 3

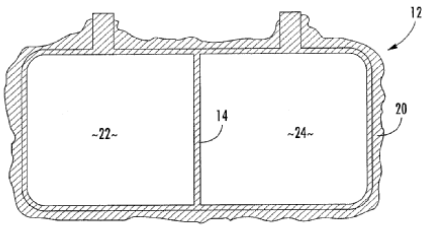

FIG. 4

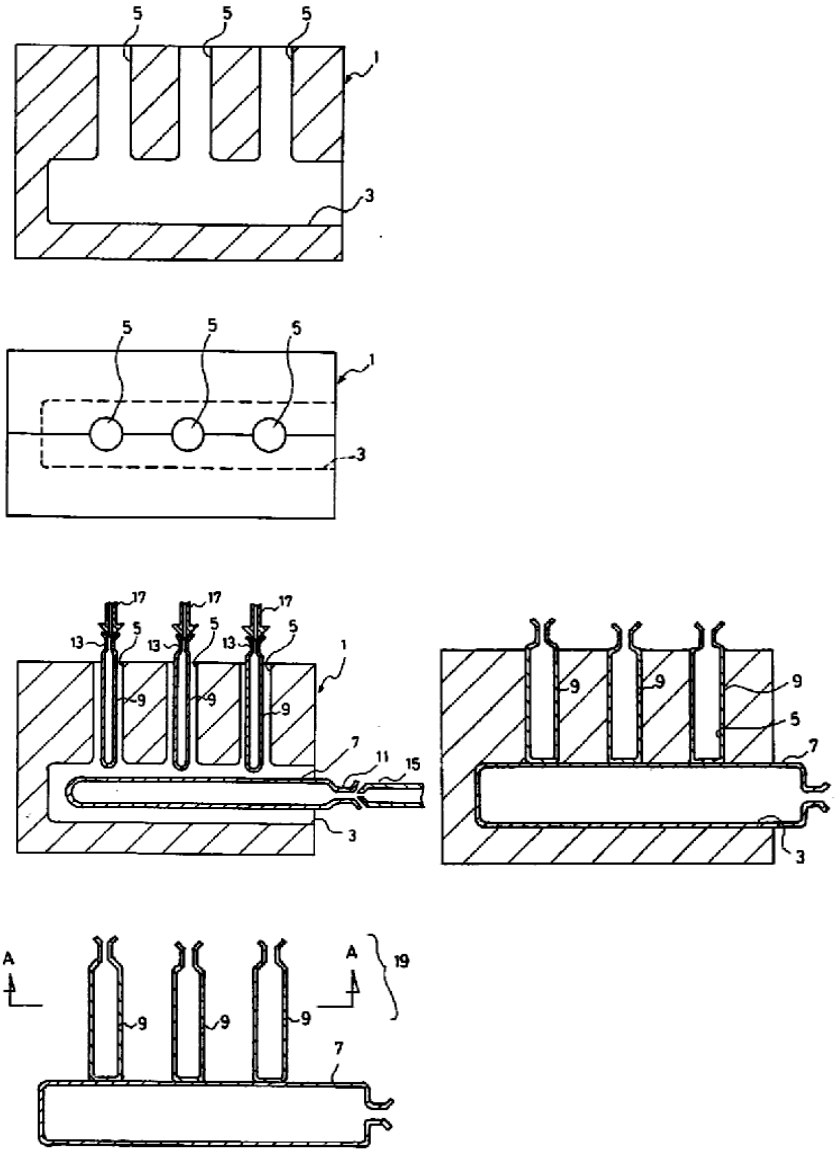

B29C 49/04

Extrusion blow-moulding

References

Informative references

Attention is drawn to the following places, which may be of interest for search:

Making preforms by extrusion moulding	B29B 11/10

Special rules of classification

- If the parison shape, e.g. the cross section or thickness distribution, is different from the standard cylindrical shape, then the to be classified document should receive a class in B29C 49/071 as inventive information and only B29C 49/04 as additional information.

- If the parison is multilayered, then the to be classified document should receive a class in B29C 49/22 as inventive information and only B29C 49/04 as additional information.

B29C 49/04102

{extruding the material continuously}

Definition statement

This place covers:

Manufacturing preforms via continuous extrusion prior to blow-moulding the preforms.

Illustrative example of subject matter classified in this group:

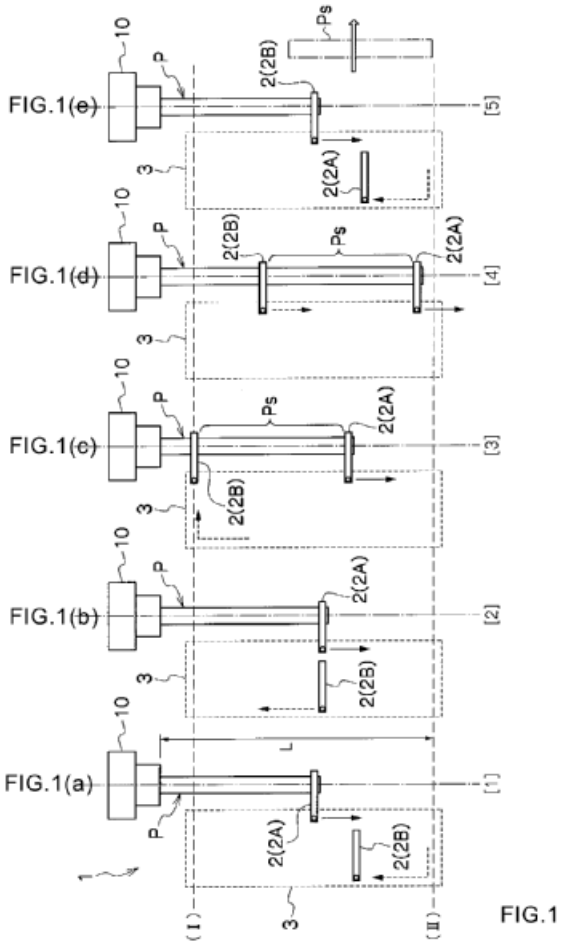

FIG.1

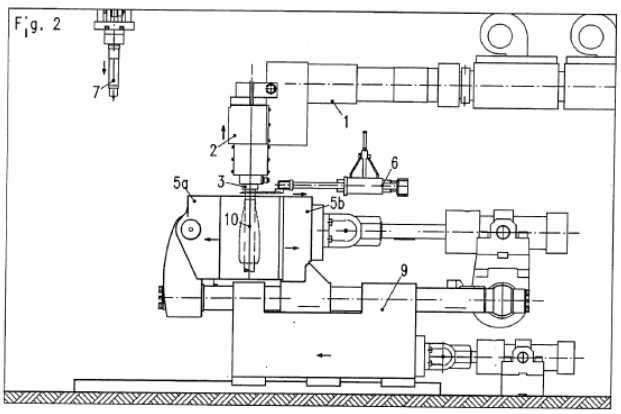

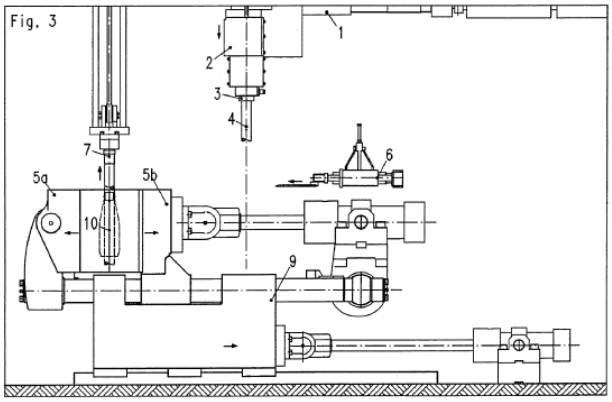

B29C 49/04104

{extruding the material discontinuously}

Definition statement

This place covers:

Manufacturing preforms via extrusion which is not continuous, prior to blow-moulding the preforms.

Illustrative example of subject matter classified in this group:

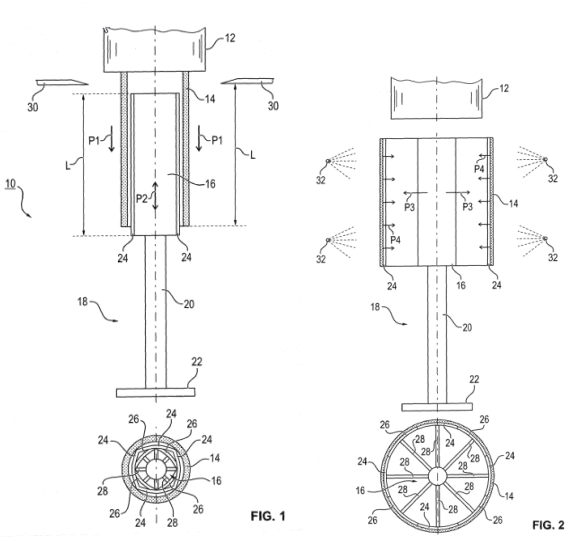

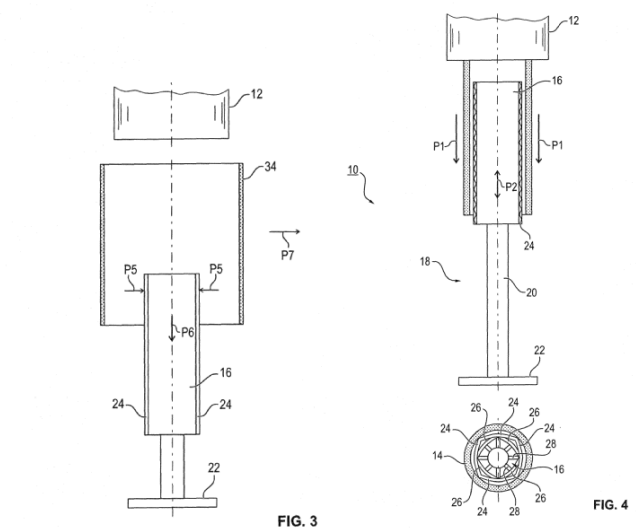

FIG. 3 FIG. 4

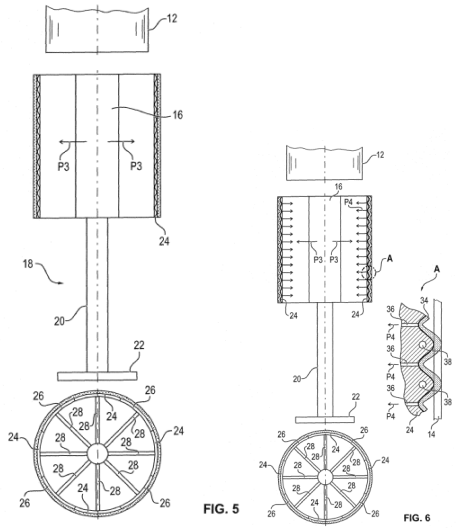

FIG. 5 FIG. 6

FIG. 4

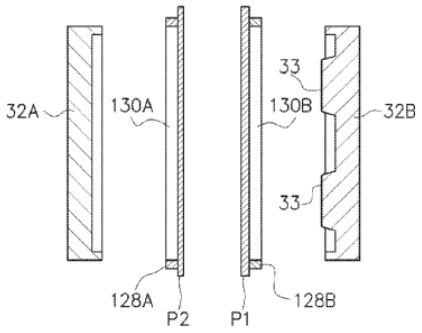

B29C 49/04106

{Means for moving the extruder head up and down, e.g. to continue extruding the next parison while blow-moulding the previous parison in the blow-mould}

Definition statement

This place covers:

Manufacturing method which includes preform manufacture followed by blow-moulding and also including a vertically movable extruder. This allows the extruder to be repositioned during the process to accommodate subsequent moulding operations concurrently with extrusion.

Illustrative example of subject matter classified in this group:

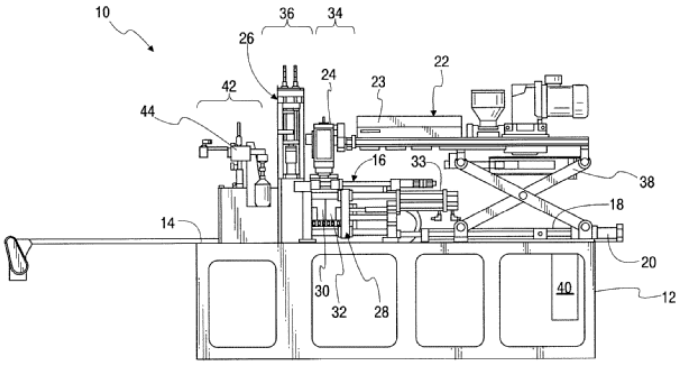

Fig. 1

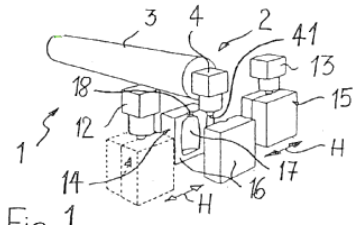

Fig. 1

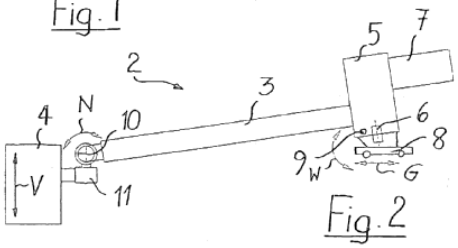

Fig. 2

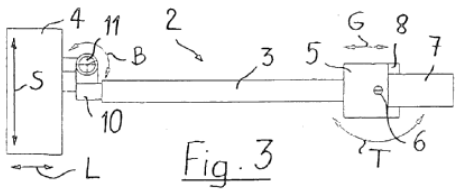

Fig. 3

B29C 49/04108

{extruding several parisons parallel to each other at the same time}

Definition statement

This place covers:

Preform extrusion including several preforms (i.e. parisons) being extruded simultaneously and parallel to each other.

Illustrative example of subject matter classified in this group:

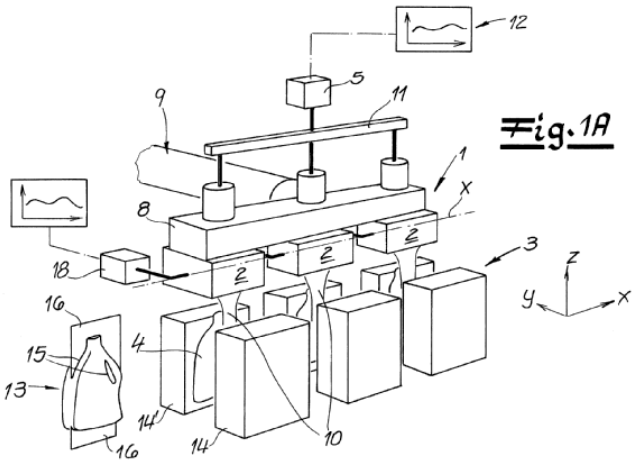

Fig. 1A

B29C 49/0411

{Means for defining the wall or layer thickness}

Definition statement

This place covers:

Preform extrusion in which the wall/layer thickness is particularly controlled by an apparatus feature.

Illustrative example of subject matter classified in this group:

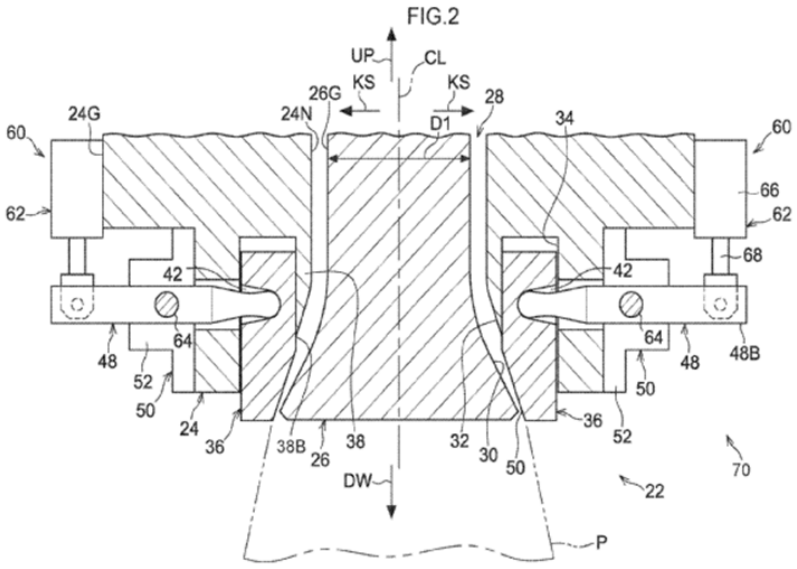

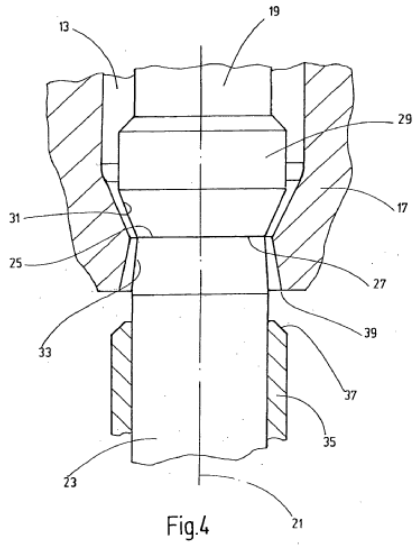

Fig.4

B29C 49/04114

{for keeping constant thickness}

Definition statement

This place covers:

Preform extrusion wherein it is ensured that the preform wall/layer thickness is constant.

Illustrative example of subject matter classified in this group:

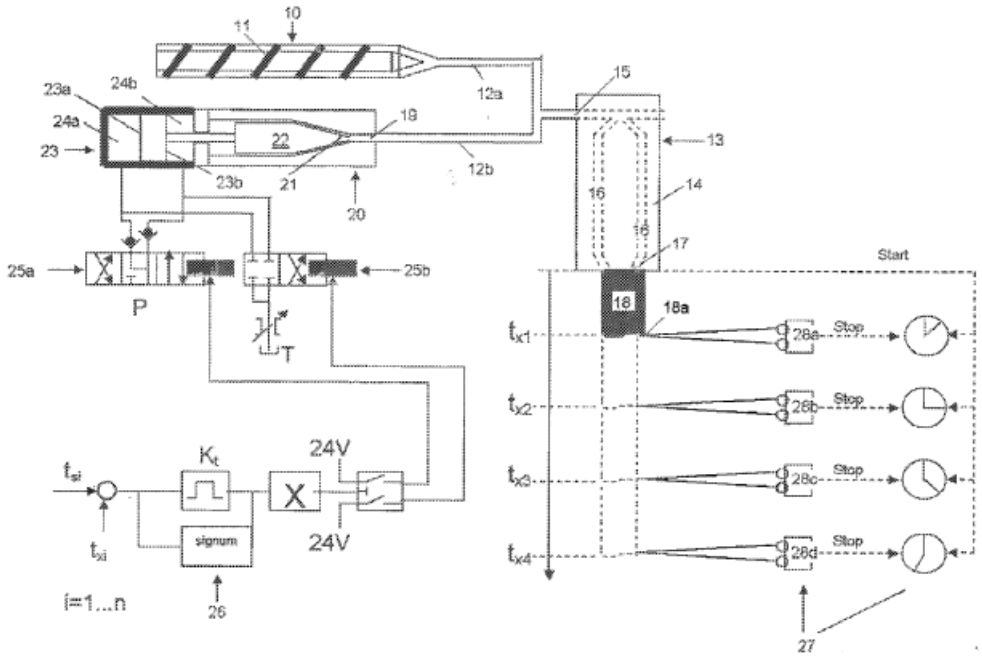

FIG. 1

B29C 49/04116

{characterised by the die}

Definition statement

This place covers:

Preform extrusion wherein the die configuration is of particular importance and effect.

Illustrative example of subject matter classified in this group:

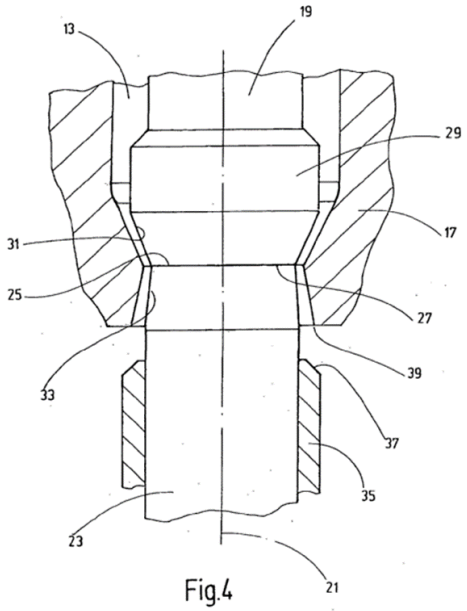

Fig.4

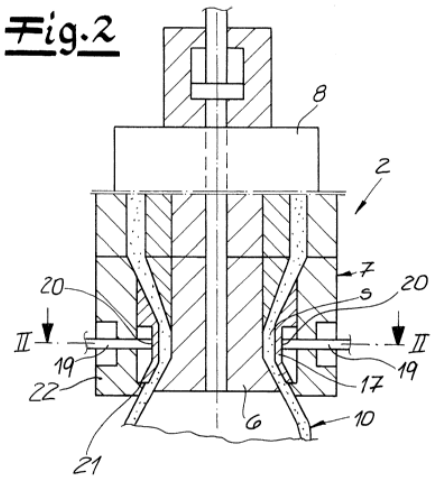

B29C 49/04118

{Means for supporting the extruded parison}

Definition statement

This place covers:

Preform extrusion method including elements which support or guide the preform after it is extruded.

Illustrative example of subject matter classified in this group:

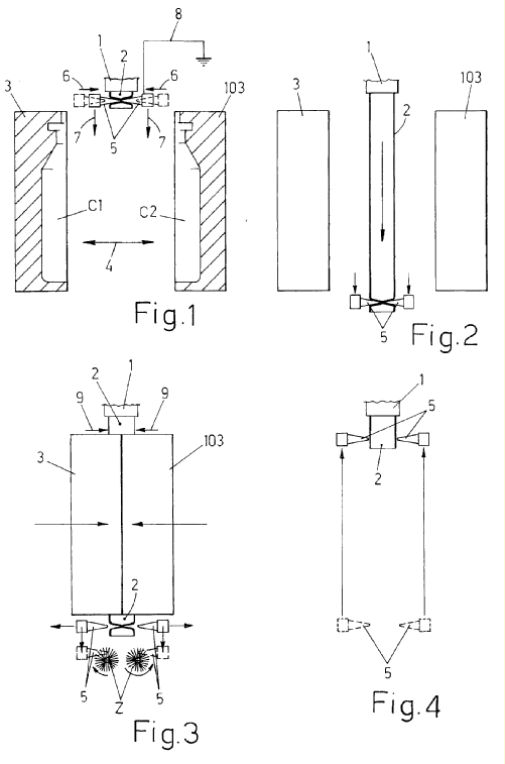

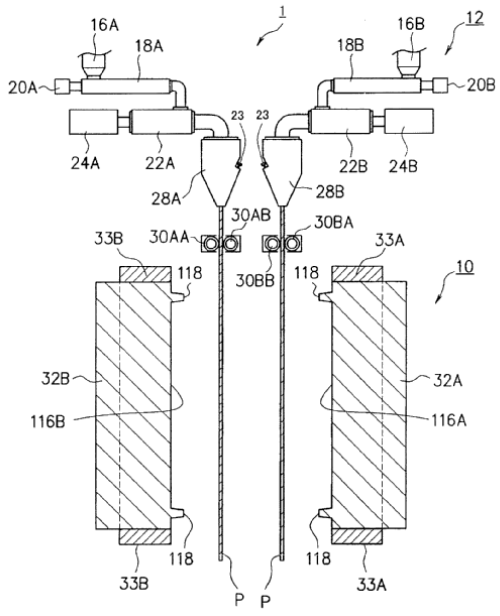

B29C 49/0412

{Means for cutting the extruded preform}

Definition statement

This place covers:

Cutting to length of the parison or cutting the tubular parison to form sheets.

Illustrative example of subject matter classified in this group:

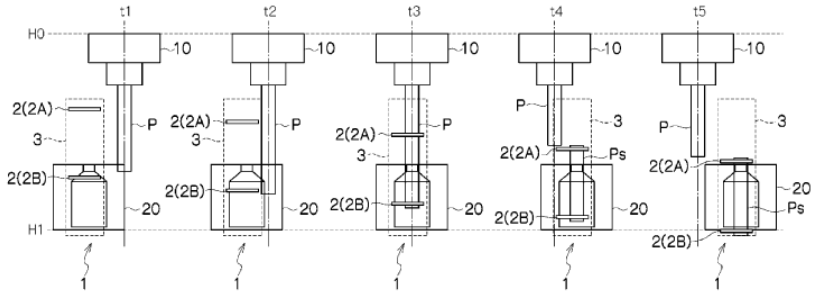

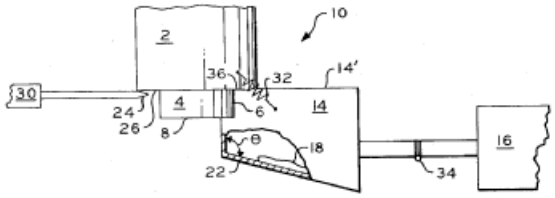

FIG. 1

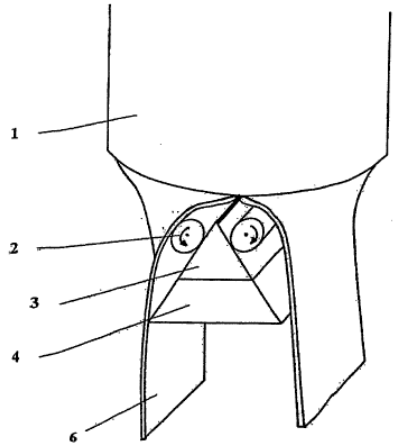

FIGURE 1

B29C 49/06

Injection blow-moulding

Definition statement

This place covers:

The injection moulding apparatus, with which the preform is produced.

The blow-moulding apparatus, with which the preform is blow-moulded.

References

Informative references

Attention is drawn to the following places, which may be of interest for search:

Injection moulding	B29C 45/00
Making preforms by injection moulding	B29B 11/08

Special rules of classification

The additional information classification B29C 49/06 is allocated to a document to be classified, when the preform is produced by injection moulding but when the injection moulding apparatus is not disclosed in greater detail.

B29C 49/42 has to be allocated as additional information where appropriate.

For the heating or cooling of preforms, as much as possible additional classification by adding appropriate classification in B29C 49/64 or its subgroups, e.g. B29C 49/6409 is recommended.

B29C 49/061

{with parison holding means displaceable between injection and blow stations}

Definition statement

This place covers:

- EP0228106

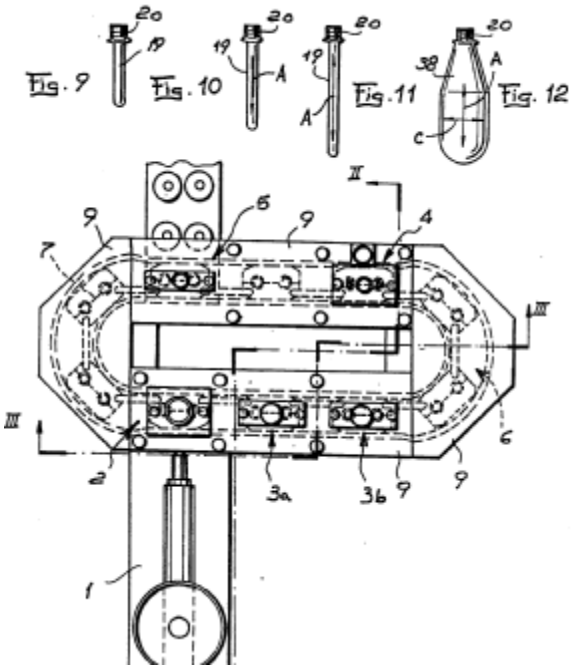

B29C 49/062

{following an arcuate path, e.g. rotary or oscillating-type}

Definition statement

This place covers:

- DE10061744

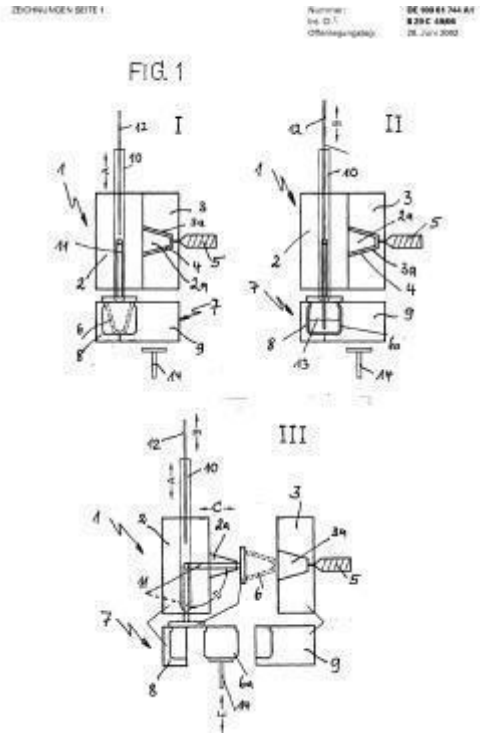

- JP6238742

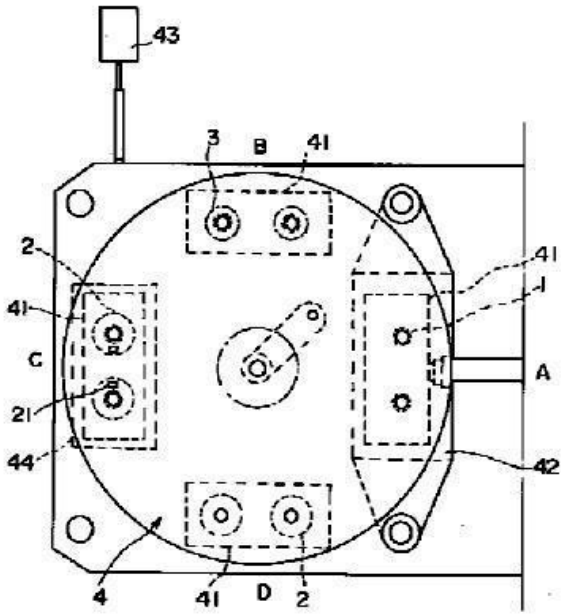

【図5】

B29C 49/063

{with the parison axis held in the plane of rotation}

Definition statement

This place covers:

- US2008118686

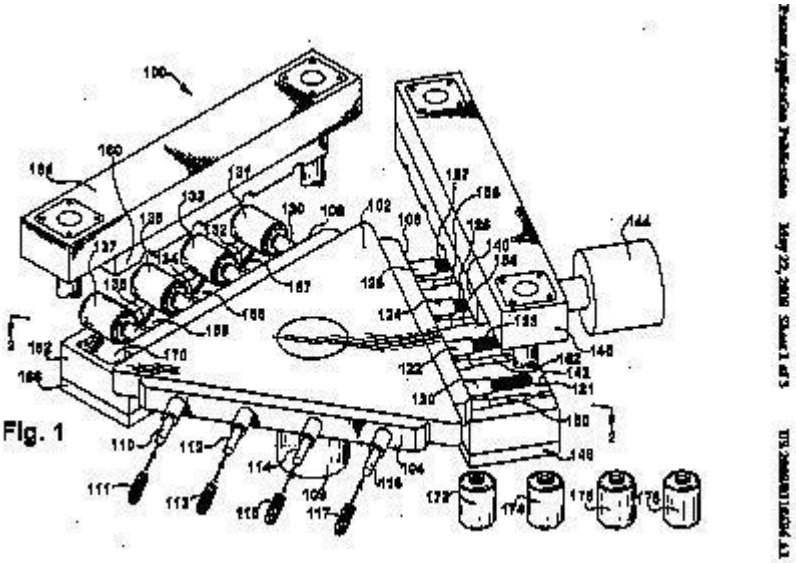

B29C 49/064

{following a rectilinear path, e.g. shuttle-type}

Definition statement

This place covers:

- US4540543

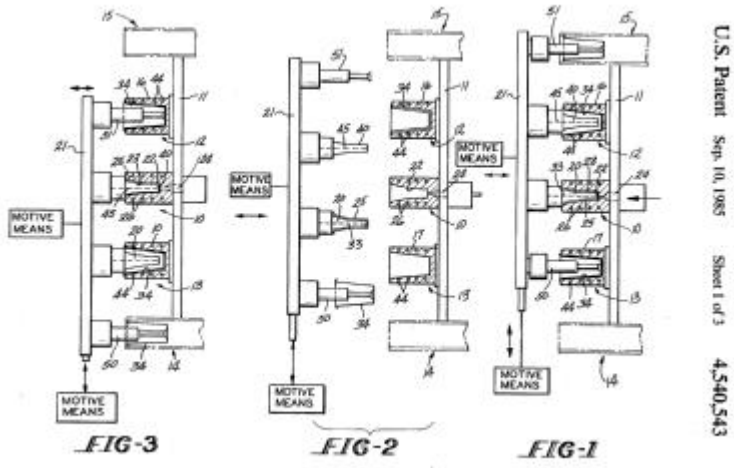

B29C 49/0665

{the injection mould cavity and the blow-mould cavity being displaceable to the geometrically fixed injection core mould}

Definition statement

This place covers:

An injection moulding apparatus of creating a preform and a blow-moulding apparatus for blowing of the preform, which includes a stationary core that is common between the injection mould and the blow-mould.

Illustrative example of subject matter classified in this group:

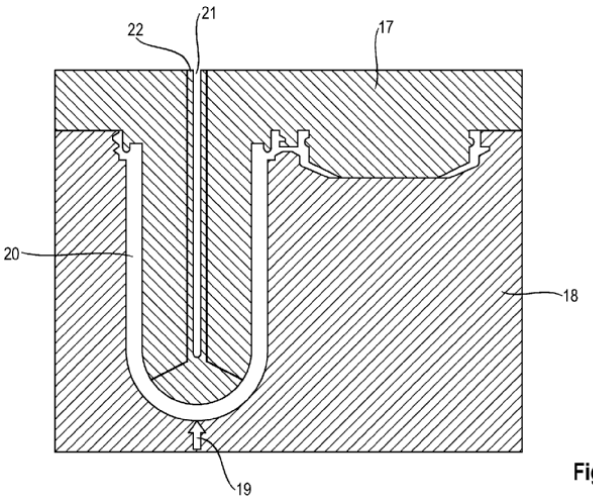

Fig. 9

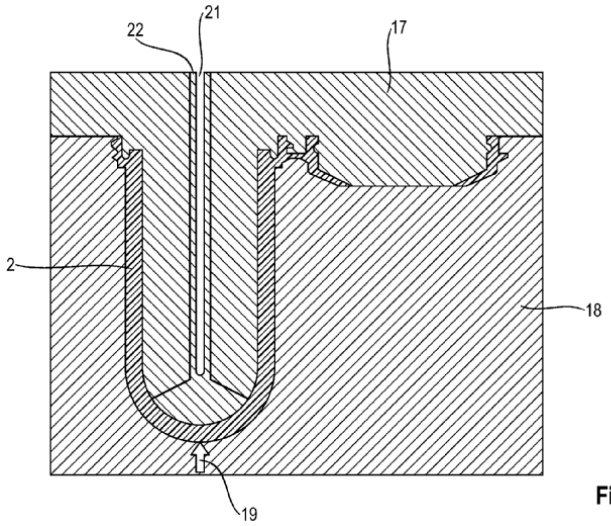

Fig. 10

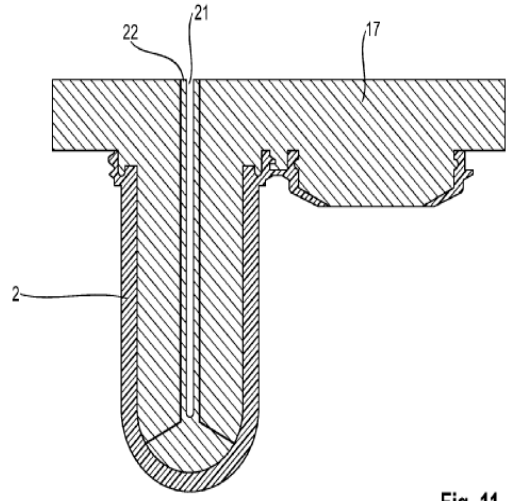

Fig. 11

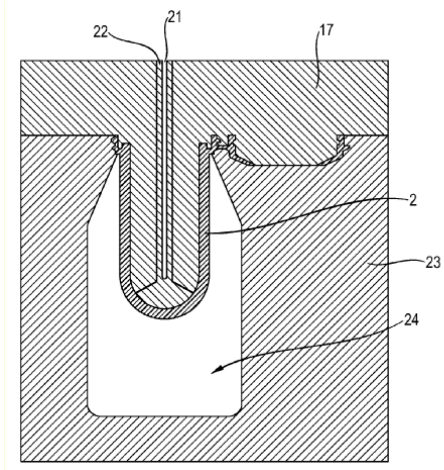

Fig. 12

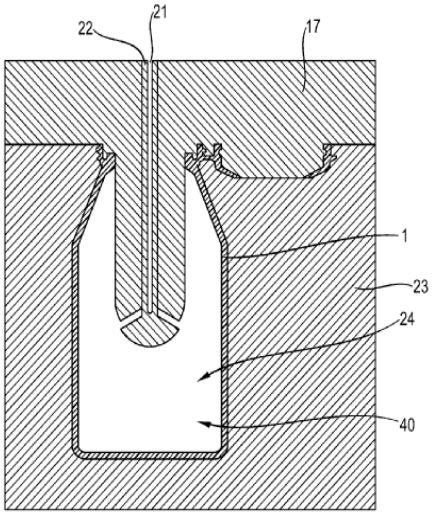
22
21
17
1
23
24
40

Fig. 13

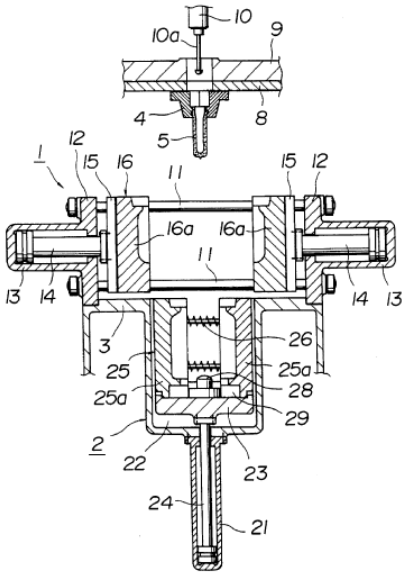
10
10a
9
4
8
5
12
1
15
16
11
15
12
16a
16a
11
13
14
14
13
3
26
25
25a
25a
28
29
2
22
23
24
21

FIG.2

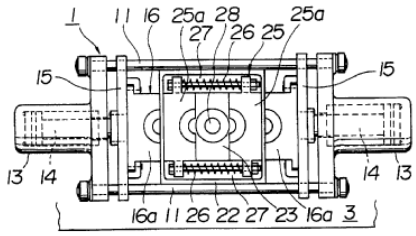

FIG.3

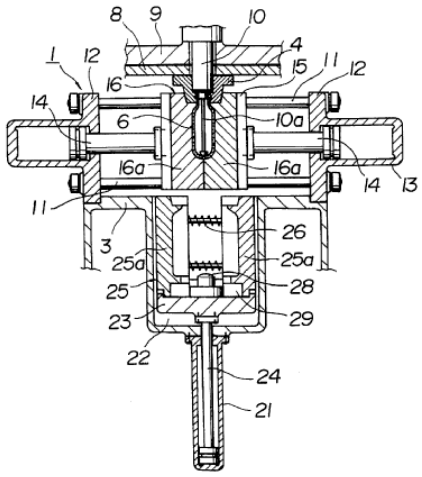

FIG.4

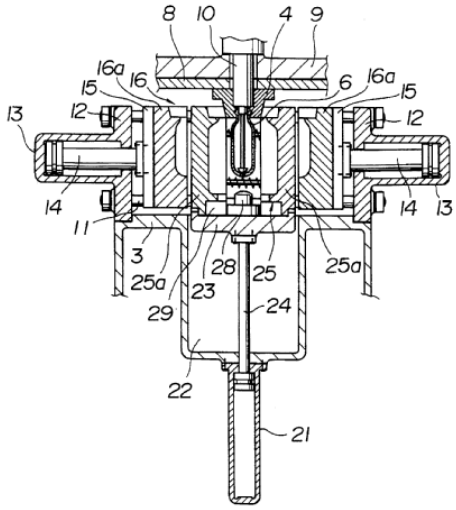

FIG.5

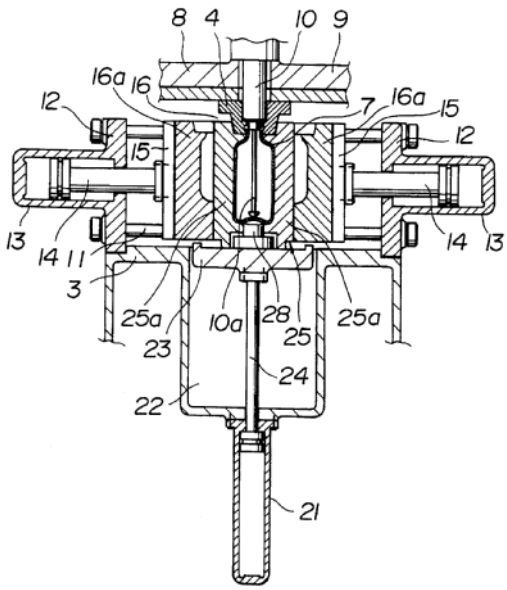

FIG.6

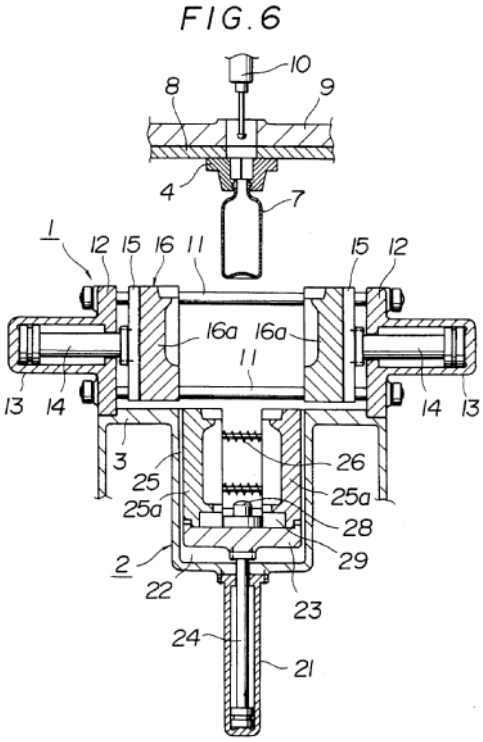

B29C 49/0685

{Compression blow-moulding}

Definition statement

This place covers:

Blow-moulding where the preform is made by compression moulding and then blow-moulded into a final article.

Illustrative example of subject matter classified in this group:

FIG. 1A

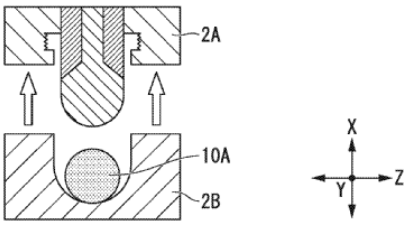

FIG. 1B

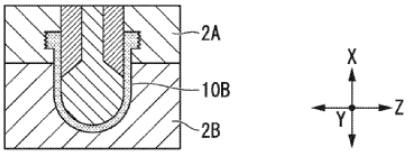

FIG. 1C

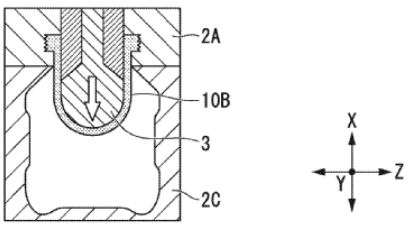

FIG. 1D

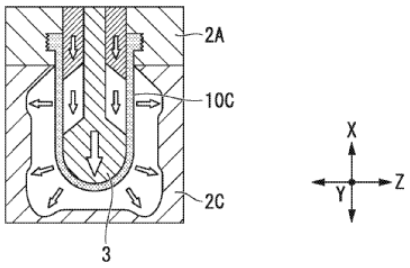

FIG. 1E

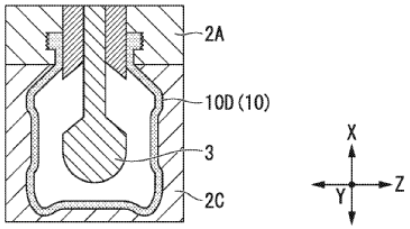

B29C 49/06905

{Using combined techniques for making the preform}

Definition statement

This place covers:

Preform manufacturing which includes a variety of moulding processes, e.g. compression, injection, extrusion, or casting.

Illustrative example of subject matter classified in this group:

The figure shows a combination of injection moulding followed by extrusion as the die moves away from the neck mould.

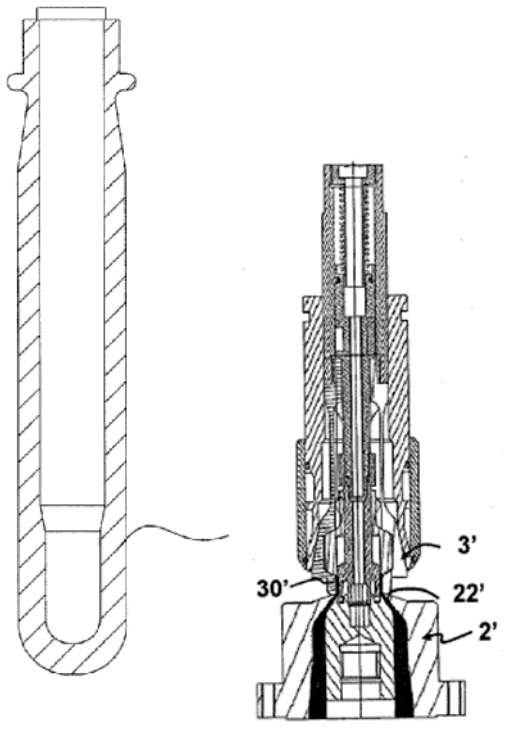

Fig.7

B29C 49/06912

{using folded sheets as a preform, e.g. folded into parallel sheets or rolled into cylindrical shape}

Definition statement

This place covers:

Preform manufacturing which includes making sheets followed by a folding process to create the preform.

B29C 49/06914

{using parallel sheets as a preform}

Definition statement

This place covers:

Manufacturing process which identifies the preform as two parallel sheets.

Illustrative example of subject matter classified in this group:

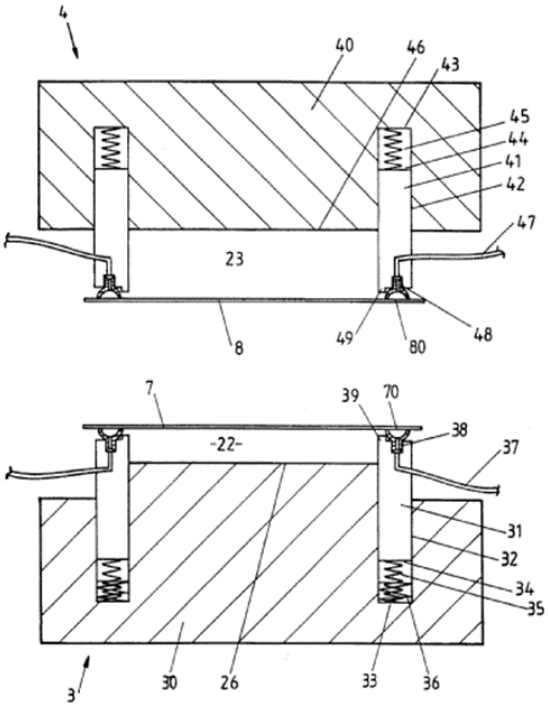

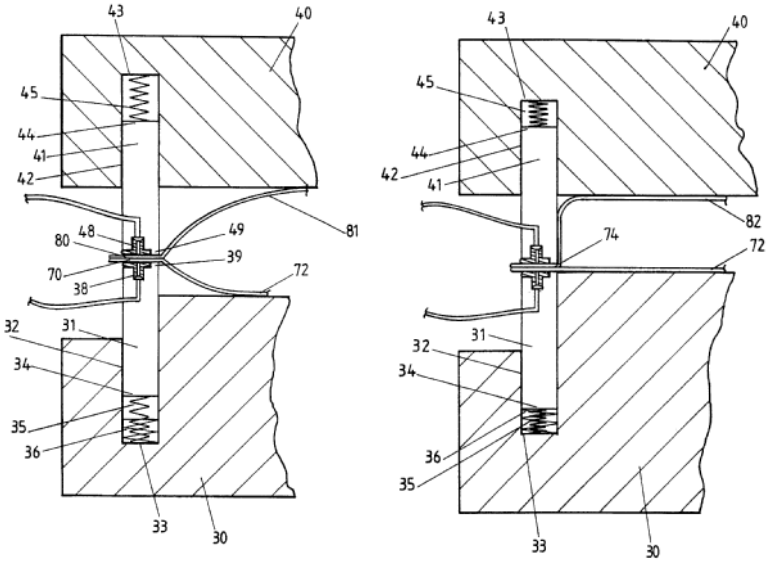

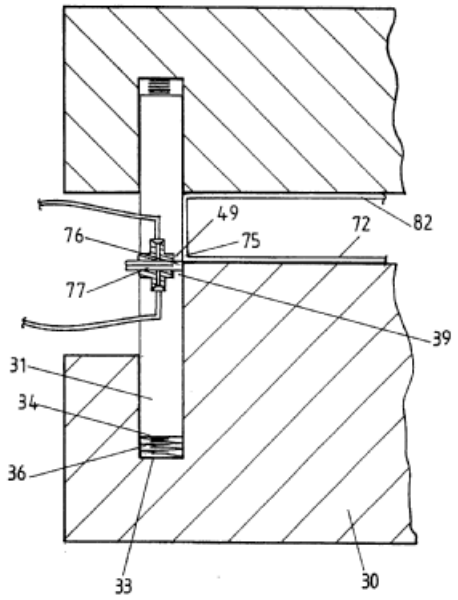
49
72
82
76
75
77
39
31
34
36
33
30

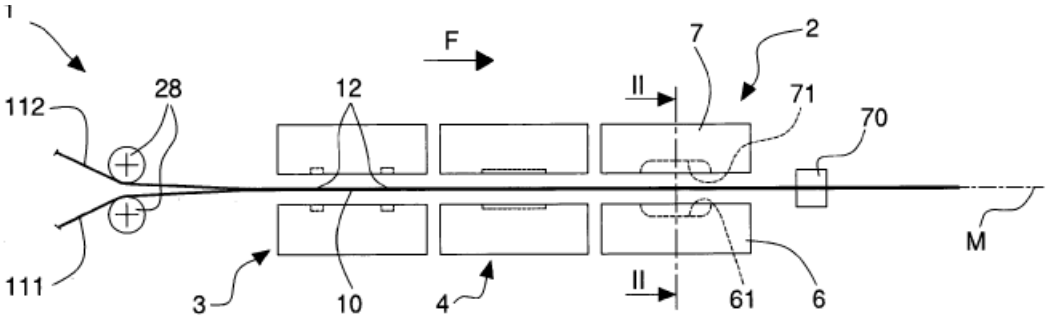
F
7
2
28
12
II
71
70
112
M
111
3
10
4
II
61
6

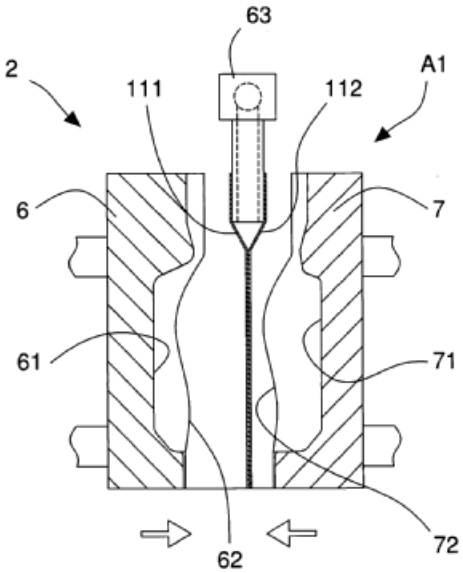
63
2
A1
111
112
6
7
61
71
72
62

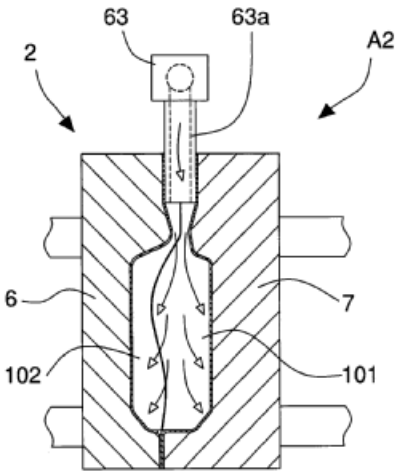
63
63a
A2
2
6
7
102
101

B29C 49/06916

{Means for avoiding parts of the sheets to stick together, e.g. to provide blow opening}

Definition statement

This place covers:

A process which uses two preformed sheets which are prevented from contacting each other in certain areas.

Illustrative example of subject matter classified in this group:

A hollow container producing device comprising a jetting unit that discharges a jet of gas toward each of the pair of parison sheets from an intermediate frame side of the parison sheet.

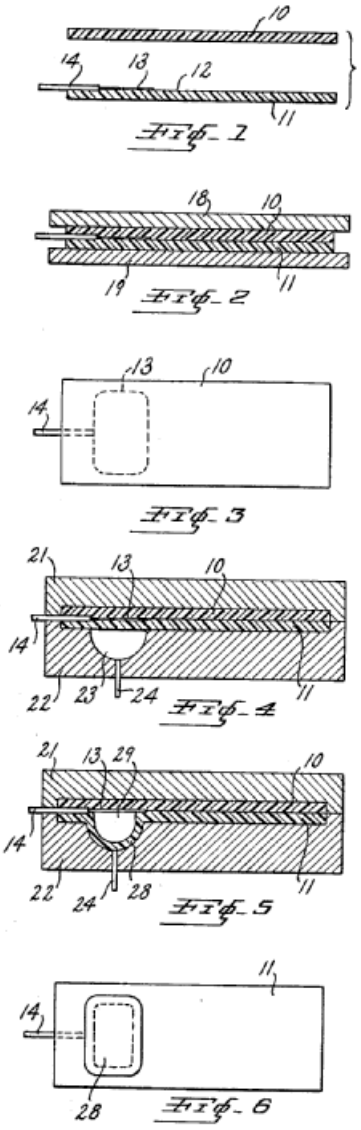

B29C 49/071

{Preforms or parisons characterised by their configuration, e.g. geometry, dimensions or physical properties}

Definition statement

This place covers:

Illustrative example of subject matter classified in this group:

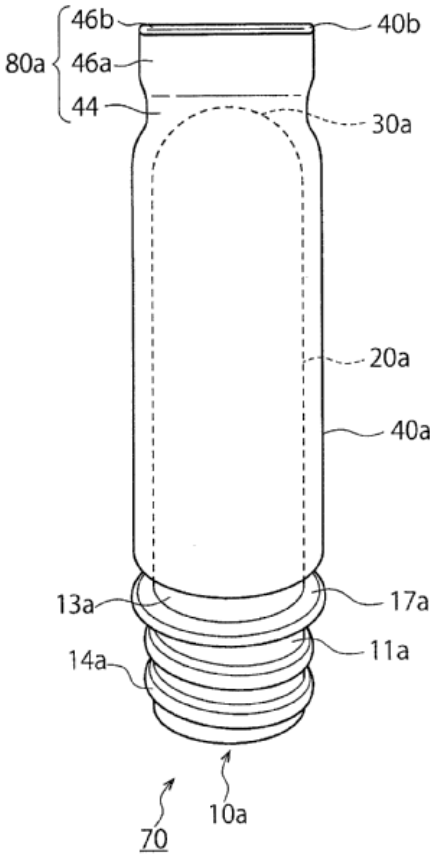

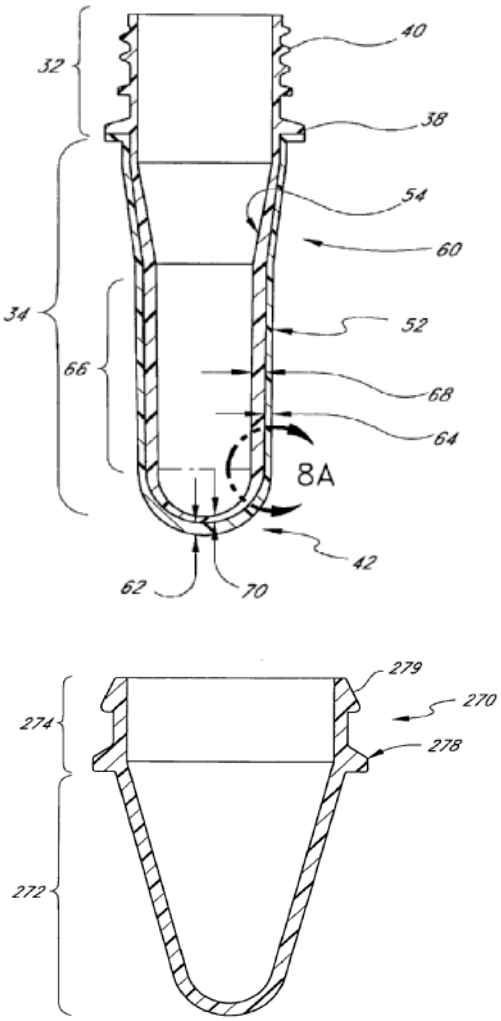
40
32
38
54
60
34
52
66
68
64
8A
42
62
70
279
270
274
278
272

FIG. 16

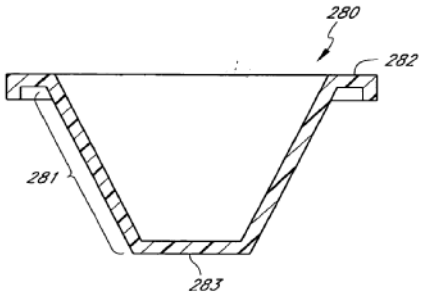
280
282
281
283

B29C 49/08

Biaxial stretching during blow-moulding

Glossary of terms

In this place, the following terms or expressions are used with the meaning indicated:

Biaxial stretching	stretching in two directions whereby one stretching component must be in longitudinal direction of the preform or in extrusion direction of an extruded parison

B29C 49/085

{without pre-stretching, e.g. simple blowing step}

Definition statement

This place covers:

Blow moulding processes, whereby the preform length before blow moulding is shorter then the mould cavity. The preform has therefore also a stretching component in the longitudinal direction during the blowing operation.

B29C 49/086

{mono-axial stretching, e.g. either length or width}

Definition statement

This place covers:

Blow-moulding process where a preform of a particular configuration is stretched only one direction.

Illustrative example of subject matter classified in this group:

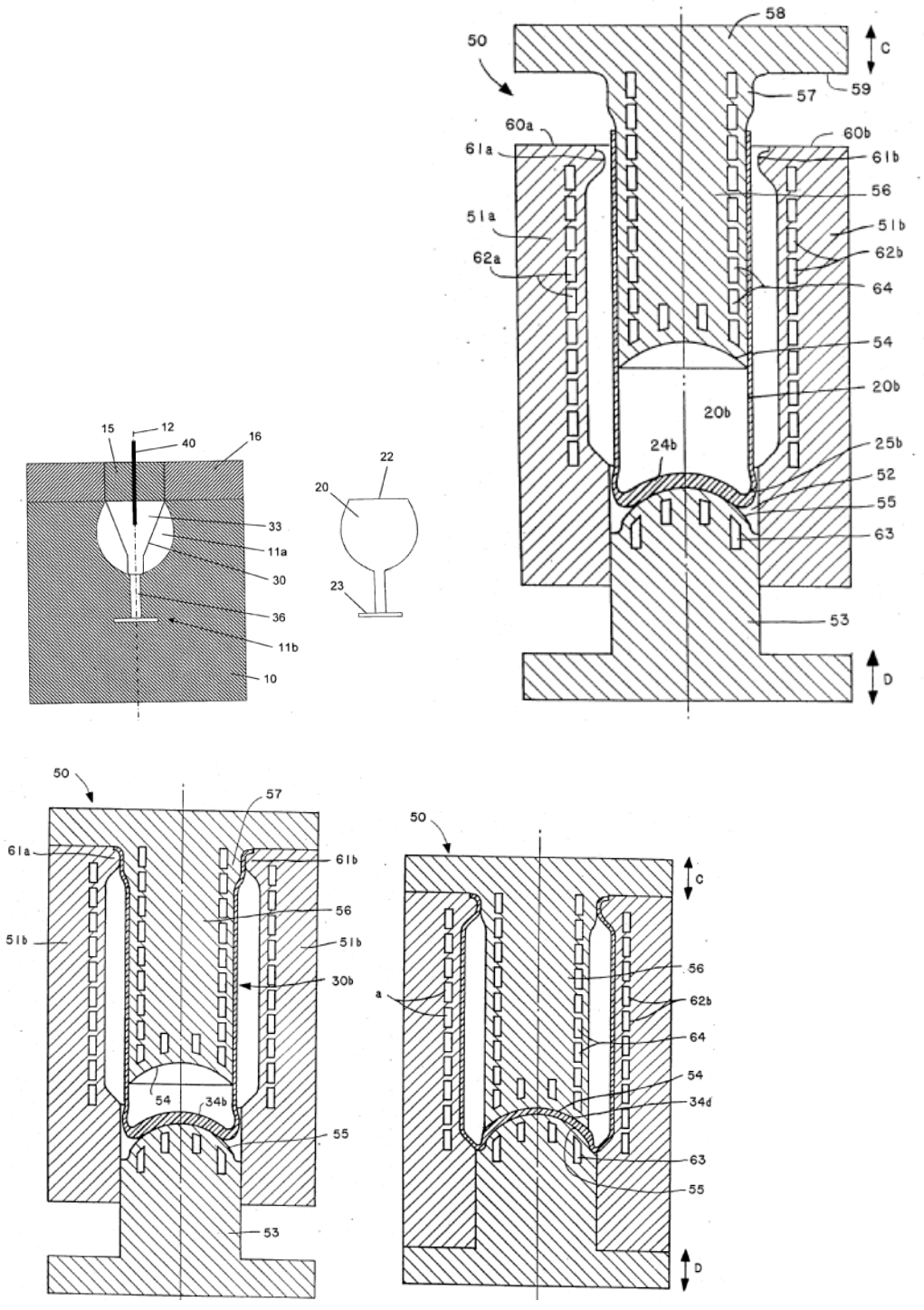

B29C 49/10

using mechanical means {for prestretching}

Definition statement

This place covers:

- FR2516855

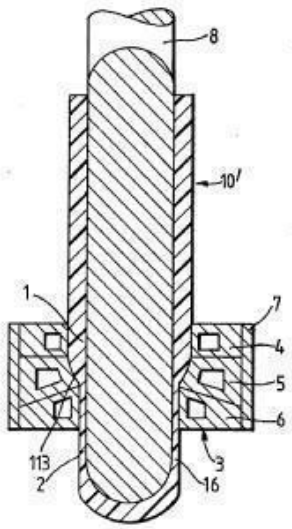

Fig. 2a

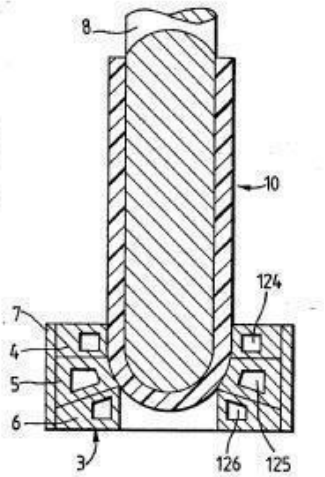

Fig. 2

- JP58045030

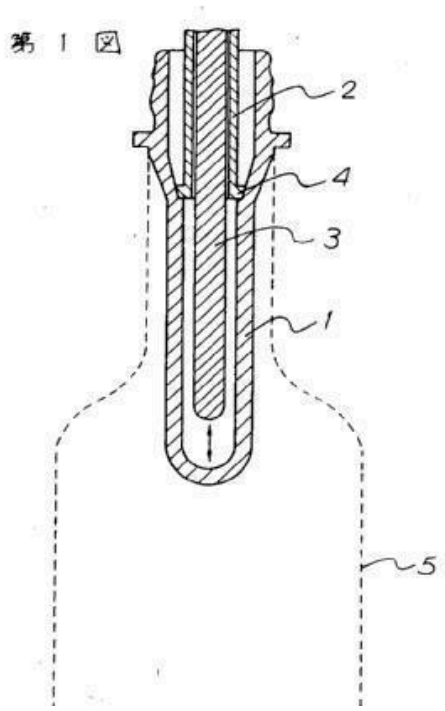

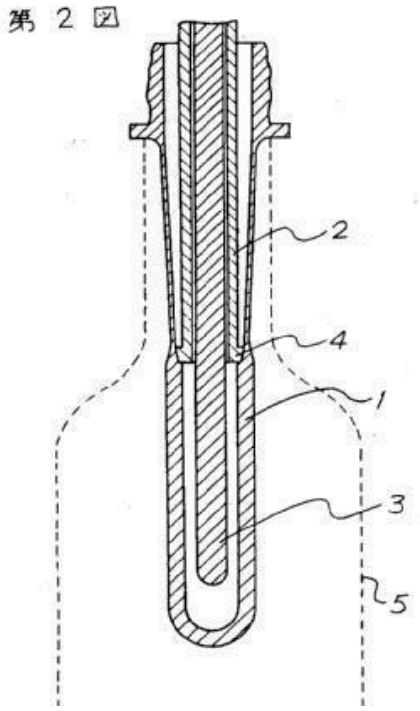

- JP58016826

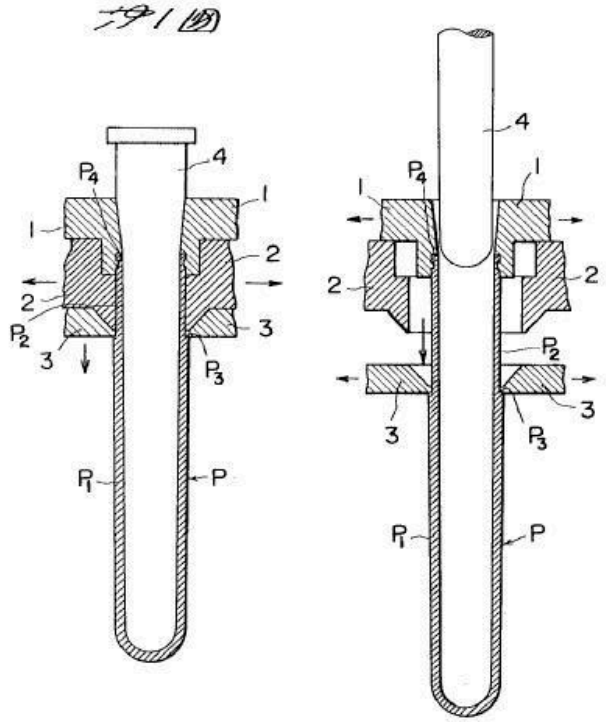

- GB1501775

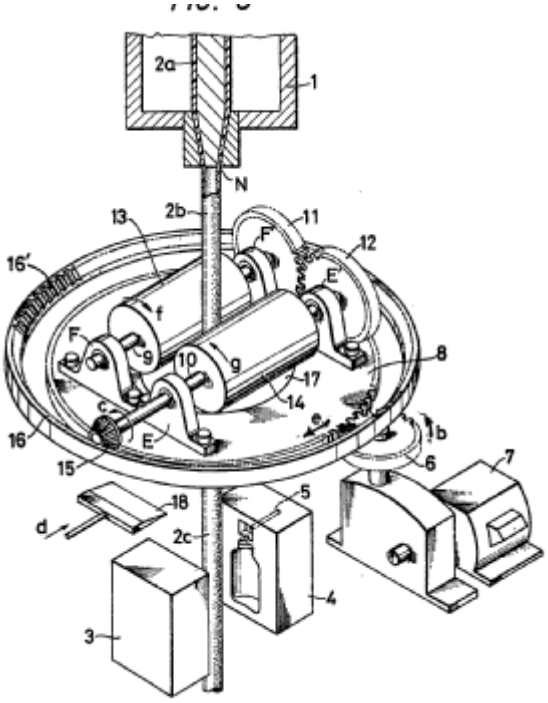

B29C 49/12

Stretching rods

Definition statement

This place covers:

Illustrative example of subject matter classified in this group:

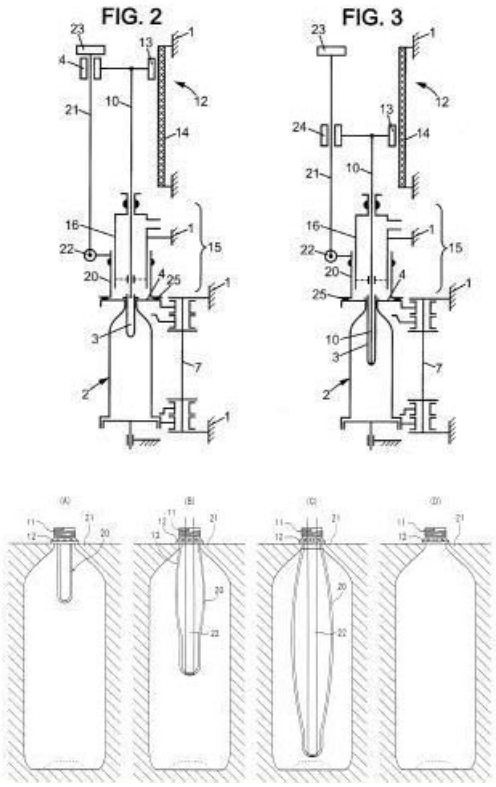

B29C 49/1202

{Means for fixing the stretching rod to the driving means, e.g. clamping means or bayonet connections}

Definition statement

This place covers:

Stretching rods which are attached to their driving means by mechanical features.

Illustrative example of subject matter classified in this group:

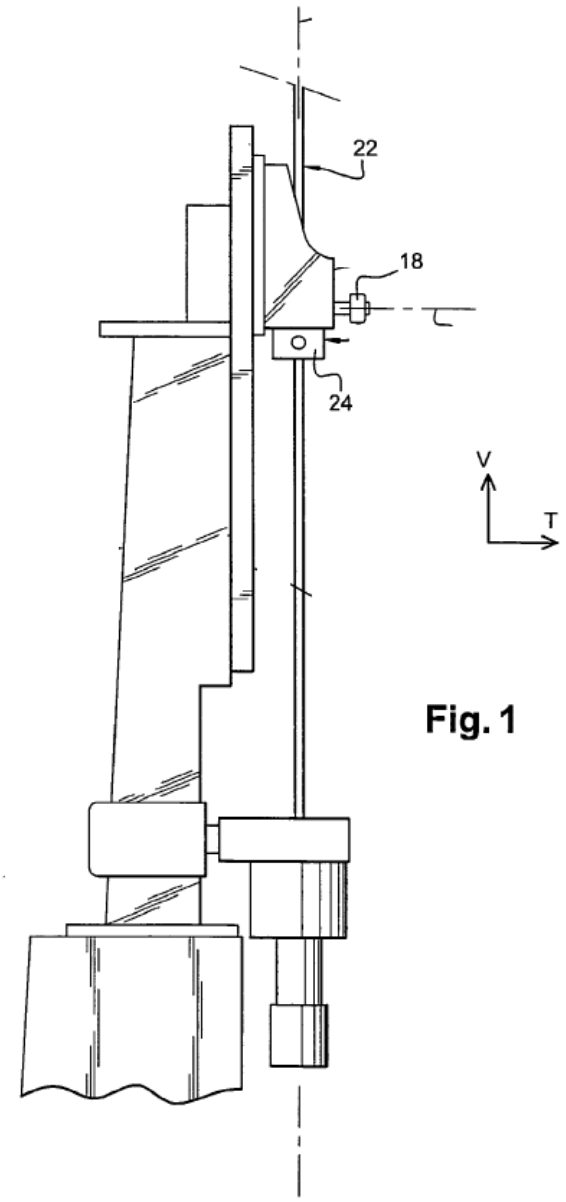

Fig. 1

Fig. 2

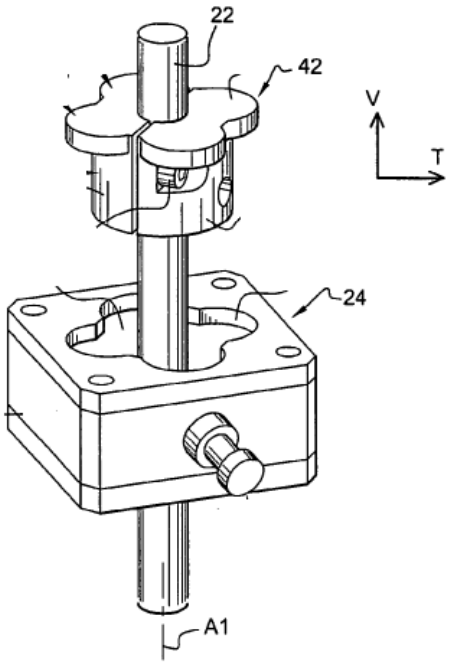

Fig. 2a

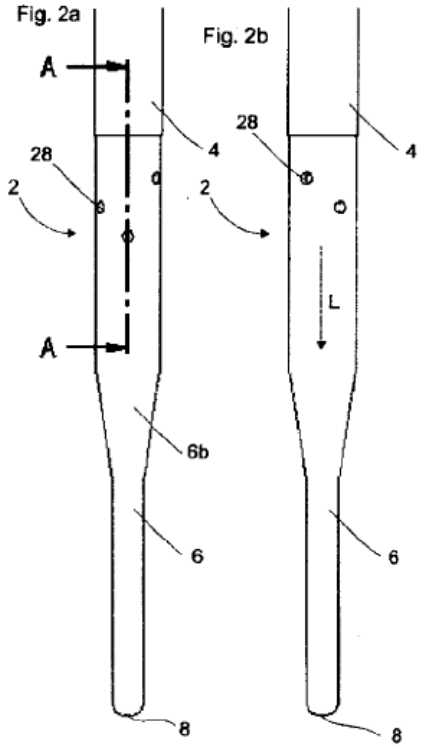

Fig. 2b

Fig. 2c

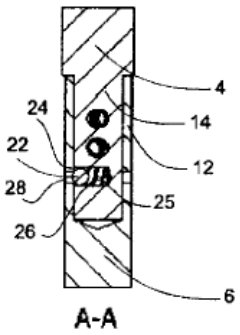

Fig. 2d

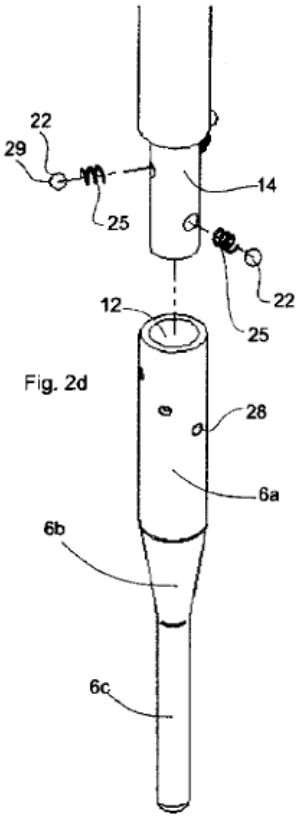

Fig. 3a

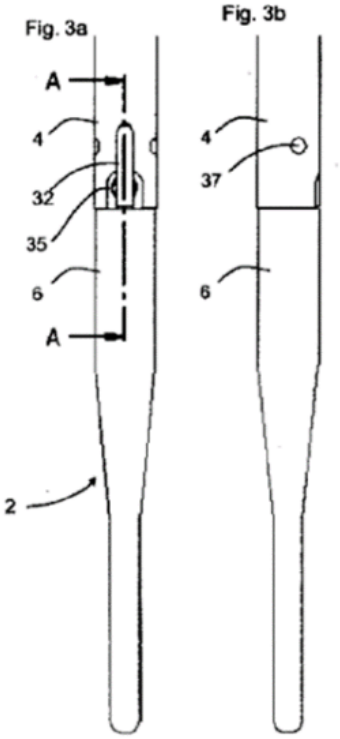

Fig. 3b

Fig. 3c

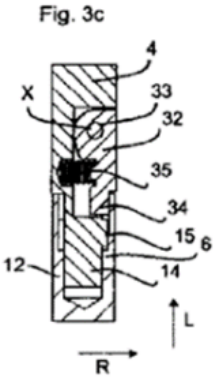

A-A

Fig. 3d

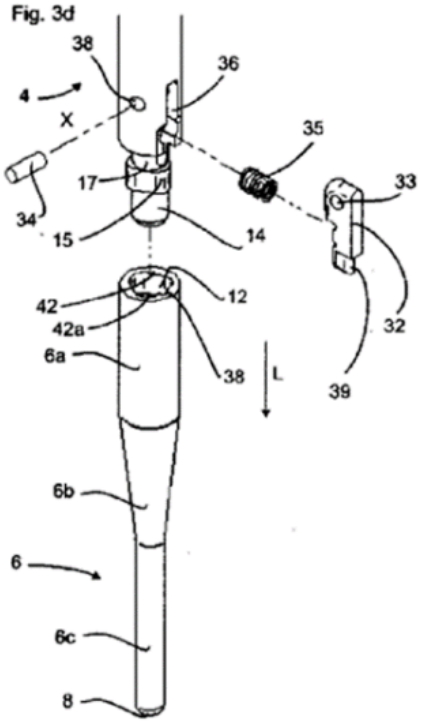

Fig. 4

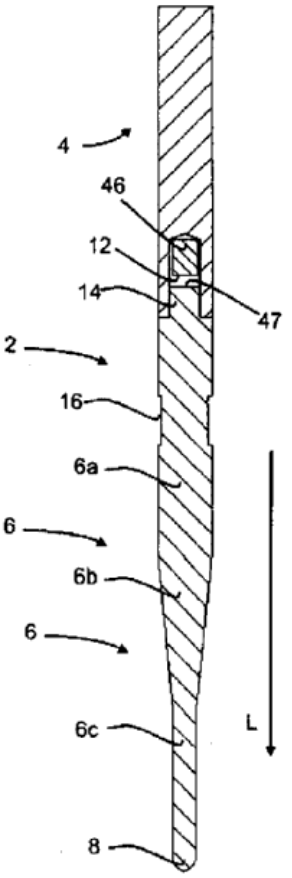

Fig. 5

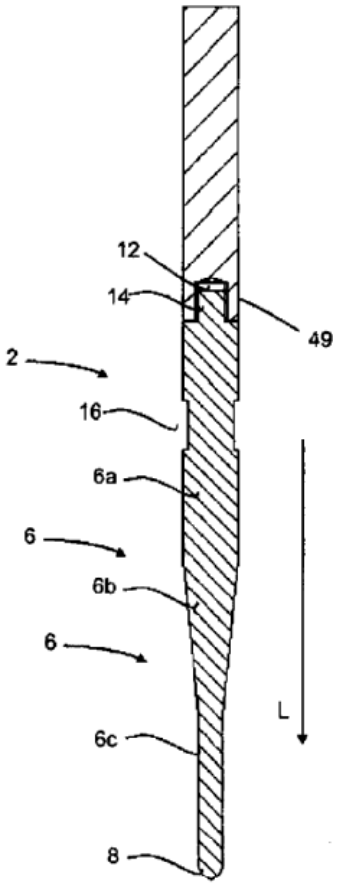

B29C 49/1205

{relative rotation between the preform and the stretch rod}

Definition statement

This place covers:

Stretch rod configuration which allows rotation between the stretch rod and the preform.

B29C 49/1206

{using at least two stretching rods for stretching different parts of the preform}

Definition statement

This place covers:

Several biaxial stretching rods which are each positioned to act upon different areas of the preform.

Illustrative example of subject matter classified in this group:

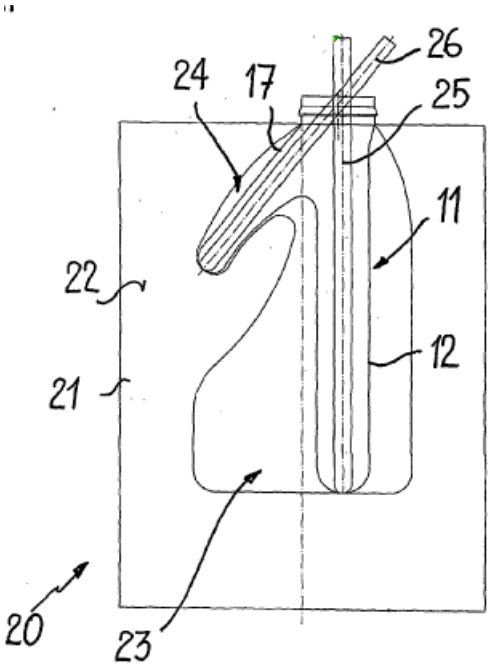

Fig. 3

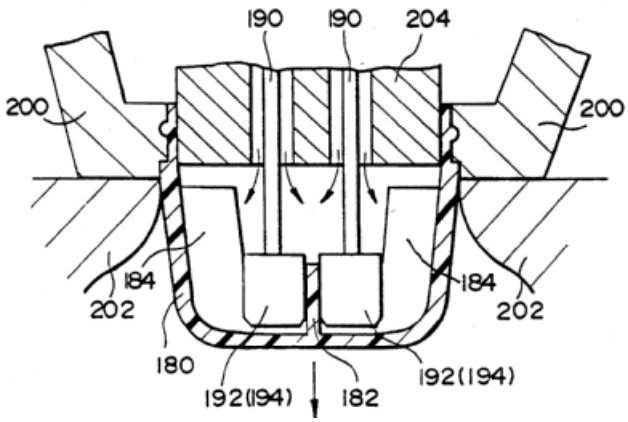

B29C 49/1208

{using additional means to clamp the preform bottom while stretching the preform}

Definition statement

This place covers:

Stretching rods which include the ability to hold/clamp the preform bottom while stretching occurs.

Illustrative example of subject matter classified in this group:

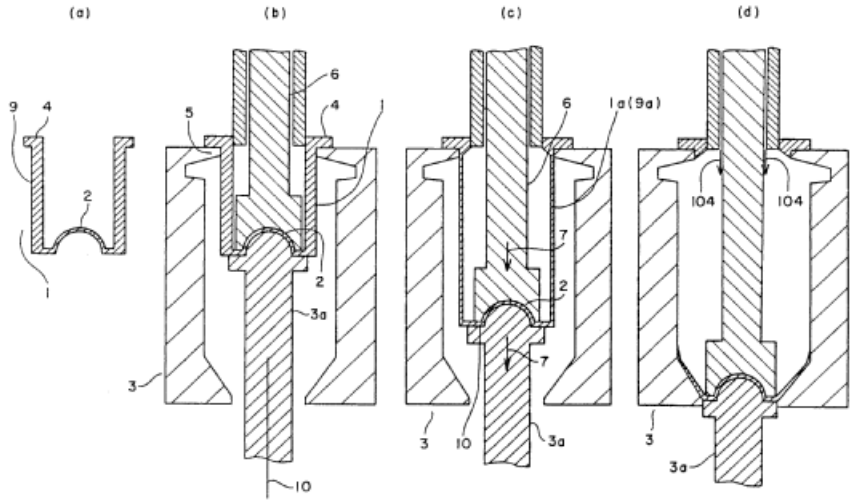

Fig. 3

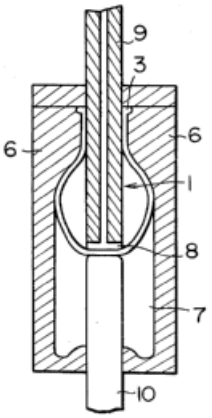

B29C 49/1212

{the stretching rod comprising at least one opening on the surface, e.g. through which compressed air is blown into the preform to expand the same}

Definition statement

This place covers:

Stretching rod which includes openings on its surface which facilitate compressed air to be blown through the openings into the preform.

Illustrative example of subject matter classified in this group:

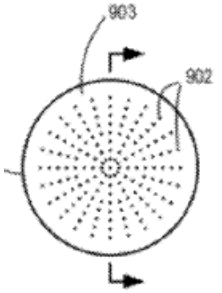

FIG. 15A

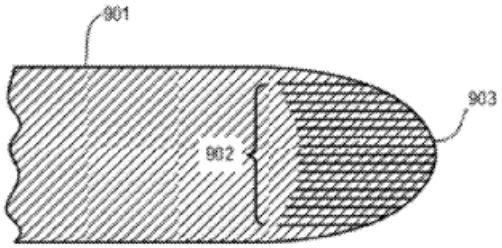

FIG. 15B

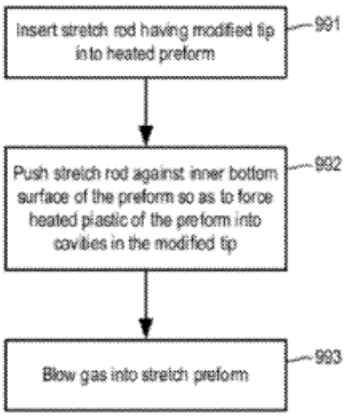

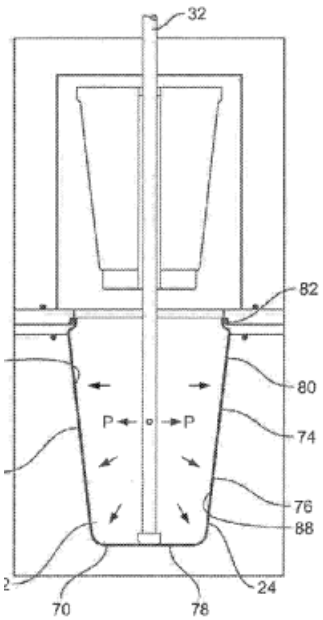

B29C 49/1215

{Geometry of the stretching rod, e.g. specific stretching rod end shape}

Definition statement

This place covers:

Stretching rods which are particularly configured to have a specific geometry or shape.

Illustrative example of subject matter classified in this group:

FIG.6A

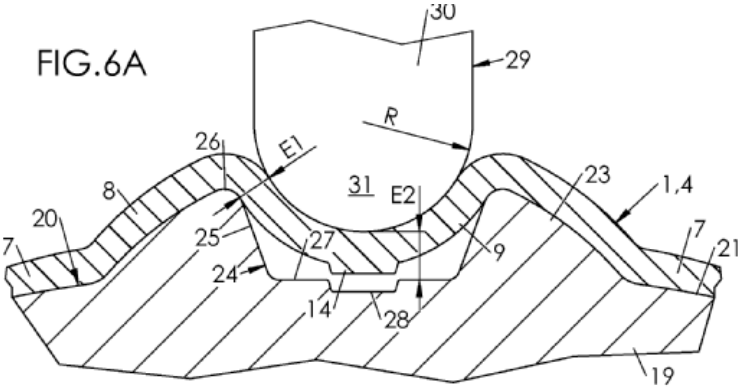

FIG.6B

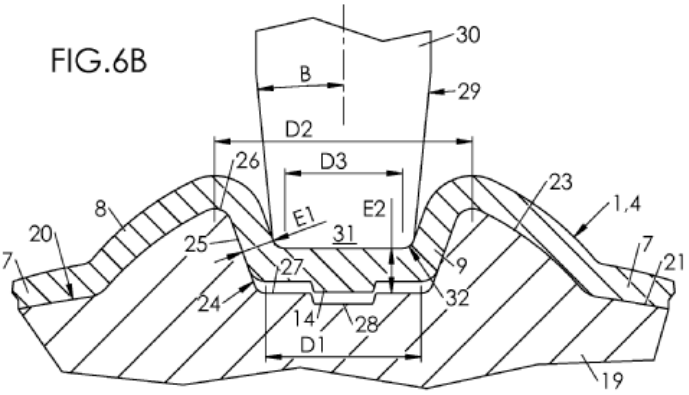

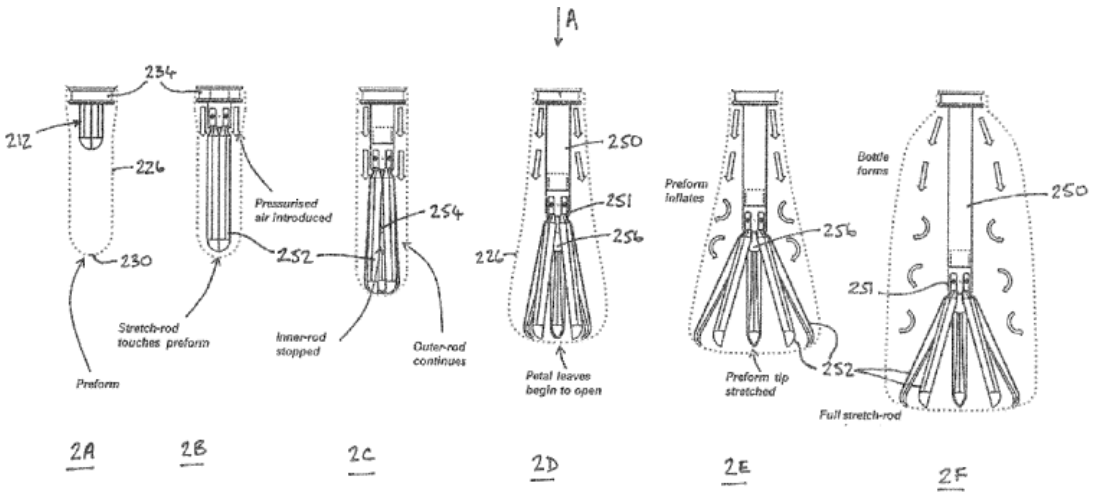

FIG.2

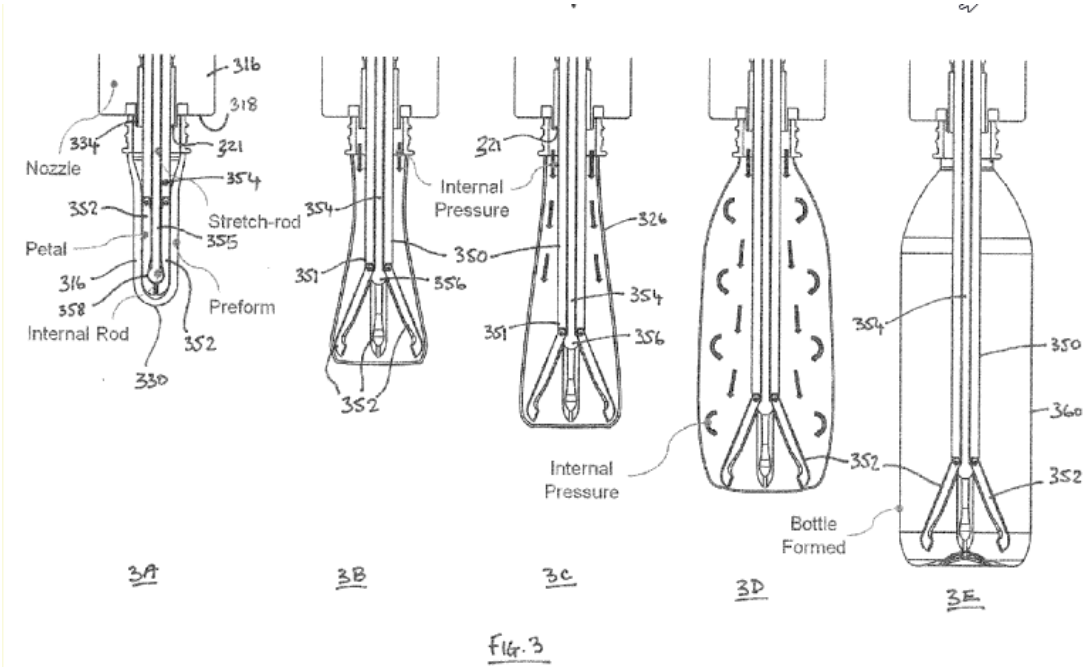

Fig. 3

B29C 49/1216

{Material for stretching rods or parts thereof, e.g. heat insulating material}

Definition statement

This place covers:

Stretching rods which are characterised by specific material, usually for a specific purpose.

B29C 49/1218

{to stretch heated tubes}

Definition statement

This place covers:

Stretching rods which are particularly suited to act upon heated preforms, e.g. tubes.

B29C 49/1222

{Pneumatic}

Definition statement

This place covers:

Pneumatic drive apparatus for a stretching element that provides a controlled stretch ratio.

Illustrative example of subject matter classified in this group:

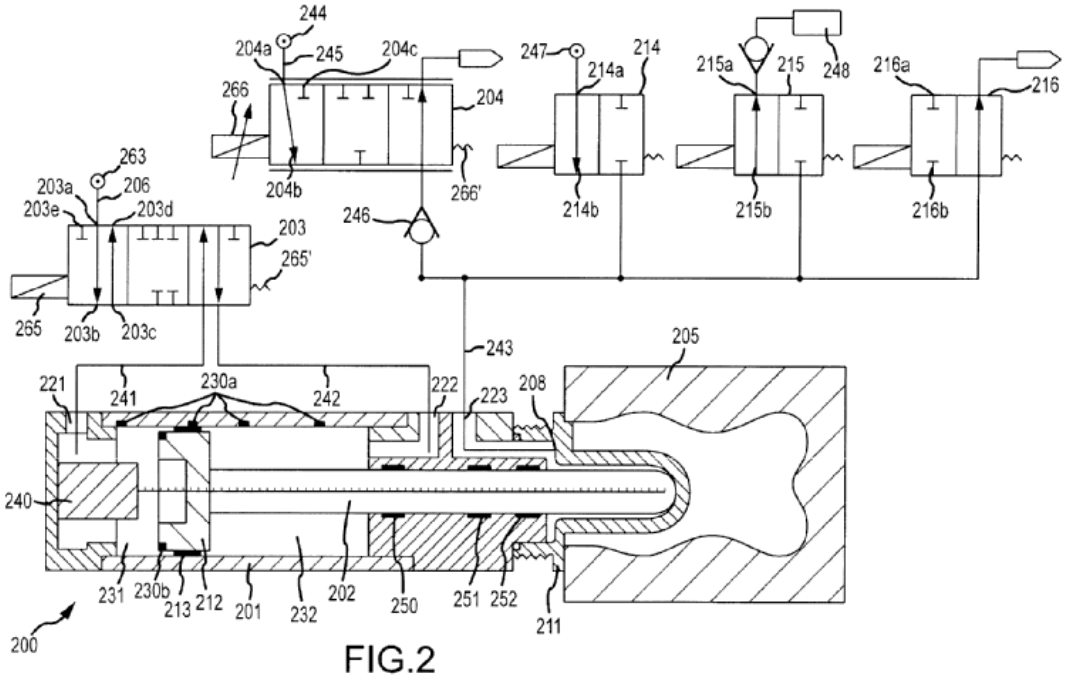

FIG.2

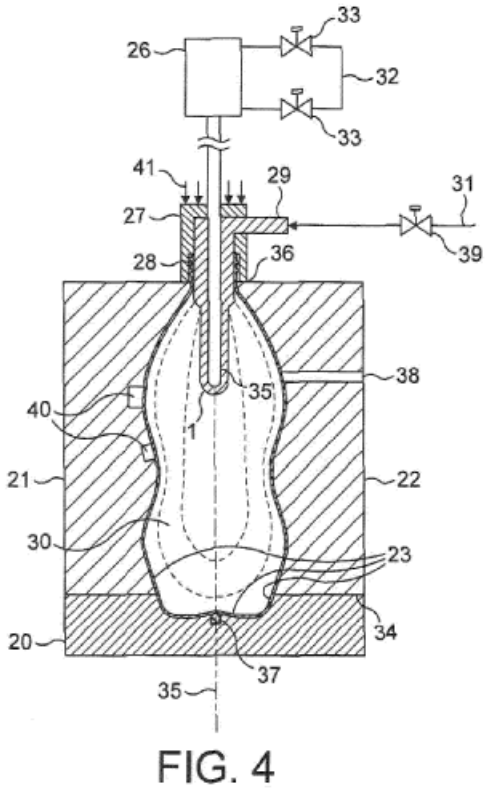

FIG. 4

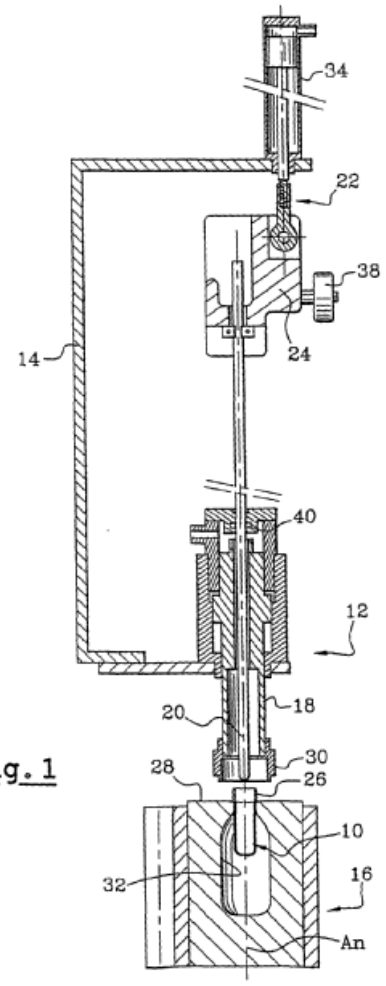

Fig. 1

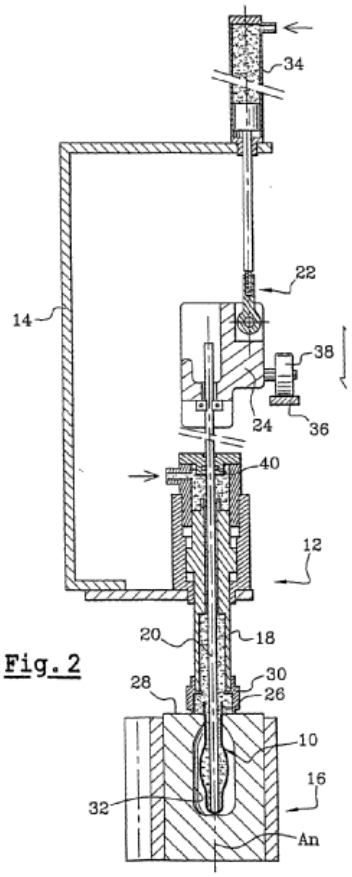
34
22
14
38
24
36
40
12
20
18
28
30
26
10
16
32
An

Fig. 2

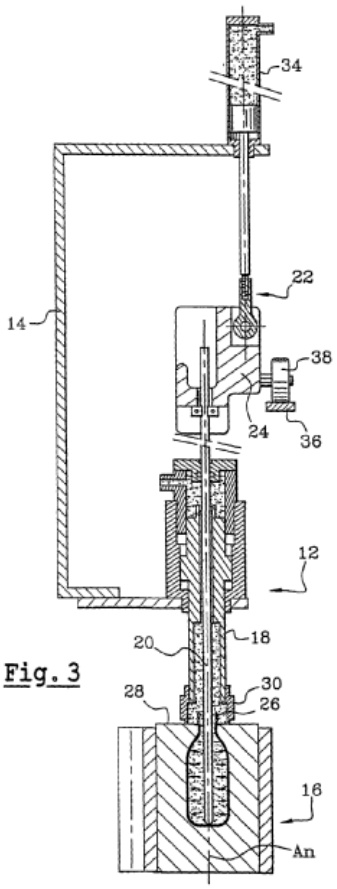
34
22
14
38
24
36
12
20
18
28
30
26
16
An

Fig. 3

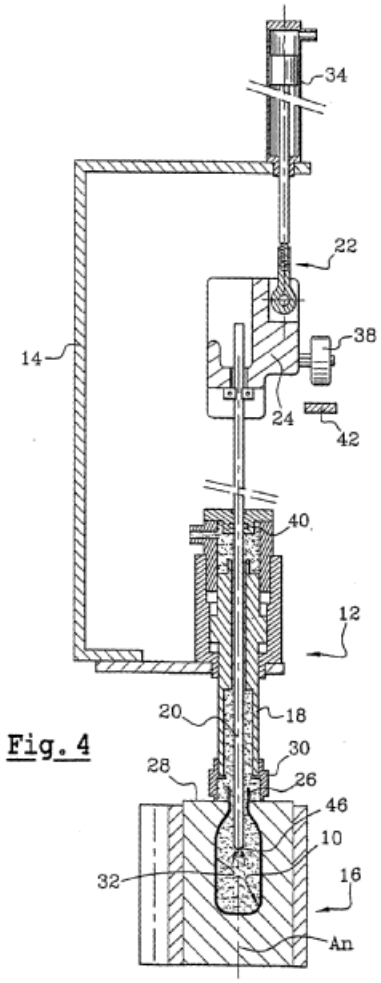

Fig. 4

B29C 49/1224

{Hydraulic}

Definition statement

This place covers:

Hydraulic drive apparatus for a stretching element that provides a controlled stretch ratio.

Illustrative example of subject matter classified in this group:

A stretch cylinder, wherein the barrel and the stretch rod are hydraulic.

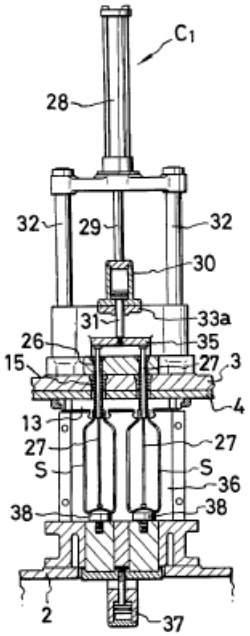

B29C 49/1226

{Mechanical}

Definition statement

This place covers:

Mechanical drive apparatus for a stretching element that provides a controlled stretch ratio.

Illustrative example of subject matter classified in this group:

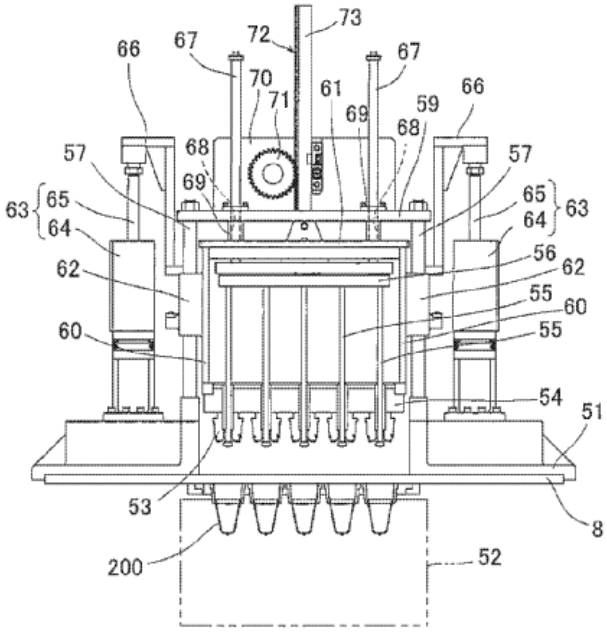

B29C 49/1229

{being a cam mechanism}

Definition statement

This place covers:

Stretching rod having a cam mechanism drive means, which stretching rod provides a controlled stretch ratio.

Illustrative example of subject matter classified in this group:

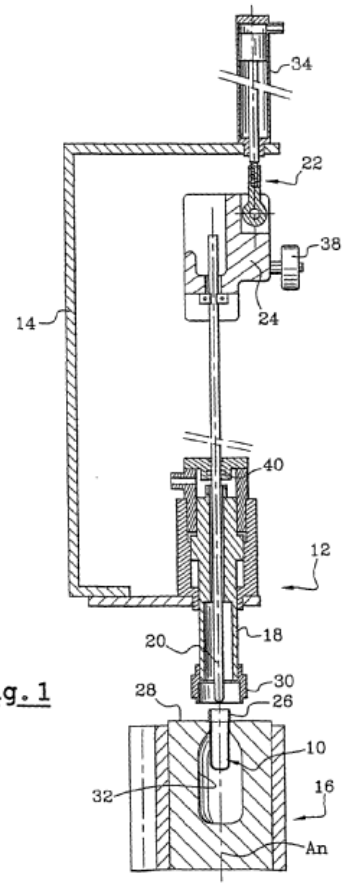

Fig. 1

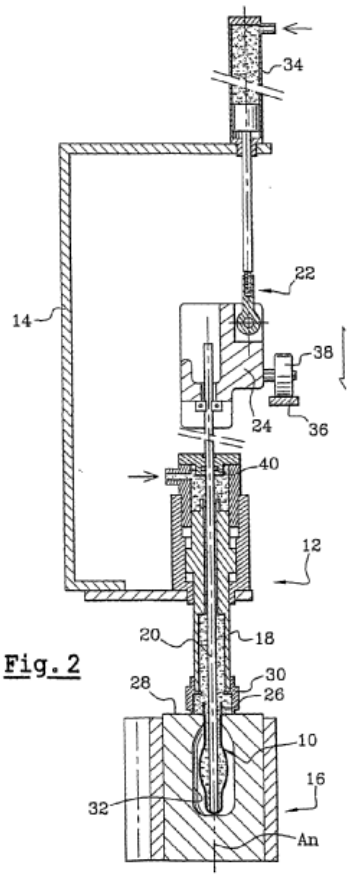

Fig. 2

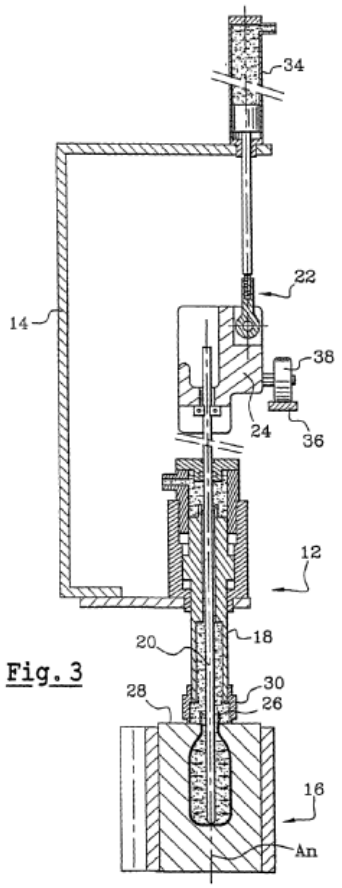
34
22
14
38
24
36
12
20
18
28
30
26
16
An

Fig. 3

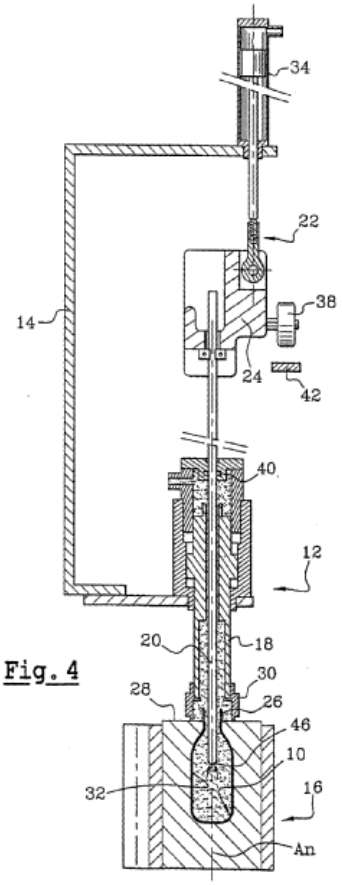
34
22
38
14
24
42
40
12
20
18
28
30
26
46
10
32
16
An

Fig. 4

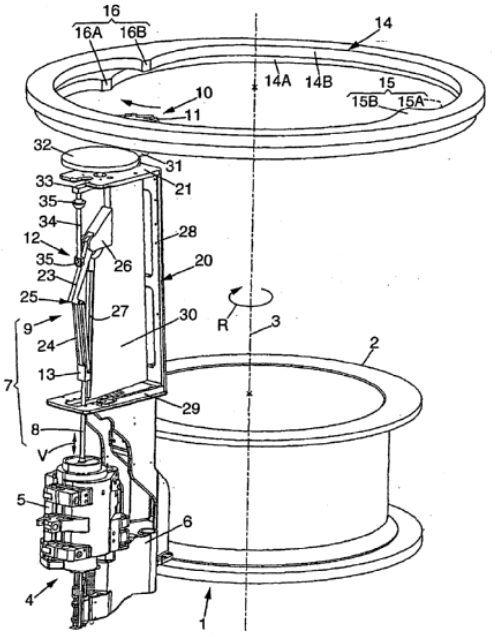
16
16A
16B
14
14A
14B
15
15B
15A
10
11
32
31
33
21
35
34
28
12
35
26
20
23
25
27
30
9
24
13
7
29
8
V
5
6
4
1
R
3
2

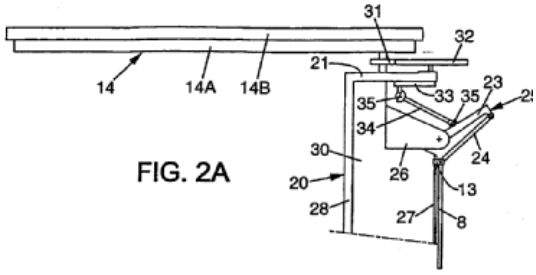

FIG. 2A

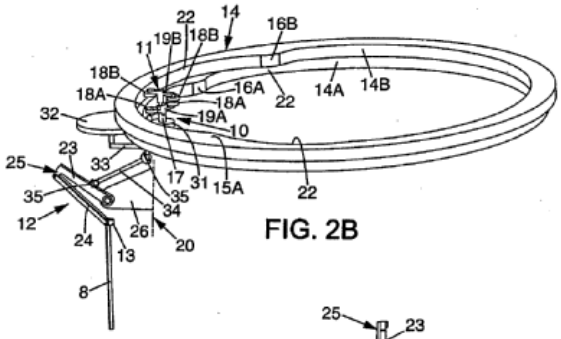

FIG. 2B

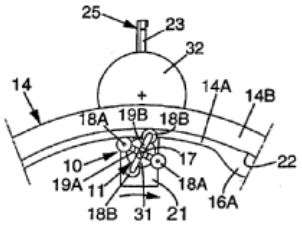

FIG. 2C

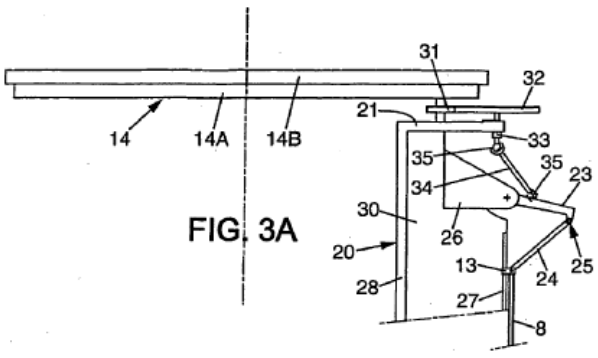

FIG. 3A

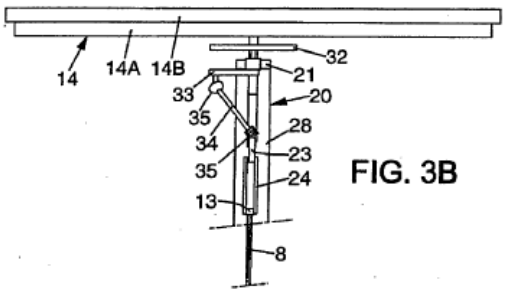

FIG. 3B

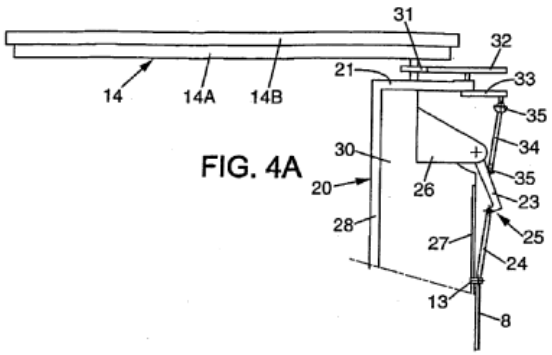

FIG. 4A

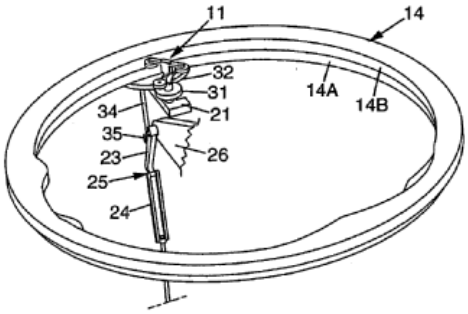

FIG. 4B

B29C 49/123

{Electric drives, e.g. linear motors}

Definition statement

This place covers:

Blow-moulding which includes a stretch rod which is driven by electric motors.

Illustrative example of subject matter classified in this group:

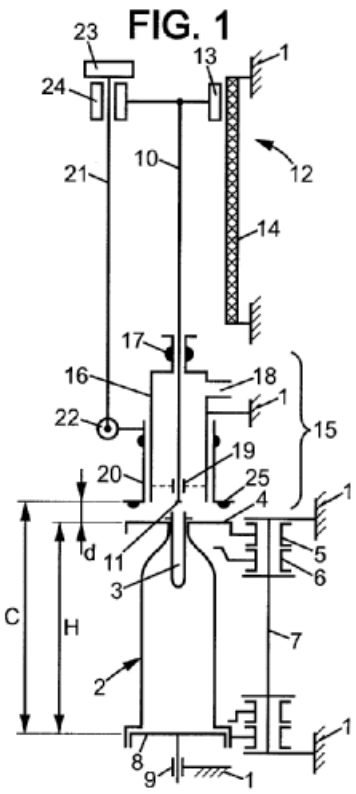

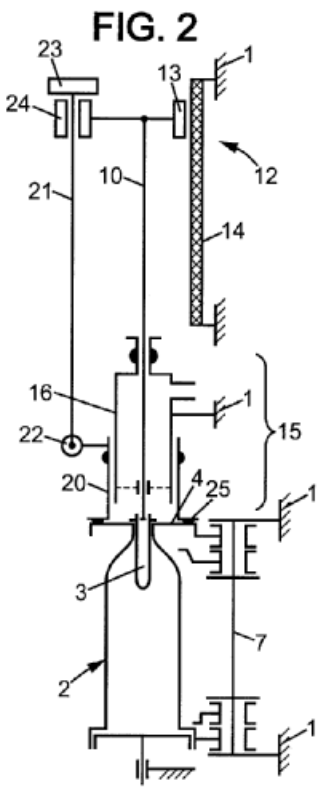

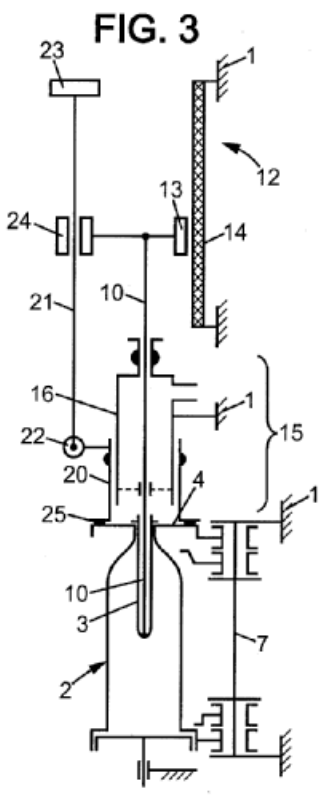

B29C 49/1232

{Magnetic}

Definition statement

This place covers:

Magnetic drive apparatus for a stretching element that provides a controlled stretch ratio.

Illustrative example of subject matter classified in this group:

The activating means 6 comprise a first magnet arrangement 9 which is magnetically coupled with a second magnet arrangement 10 located within said chamber 8 and integral to the stretching rod 2.

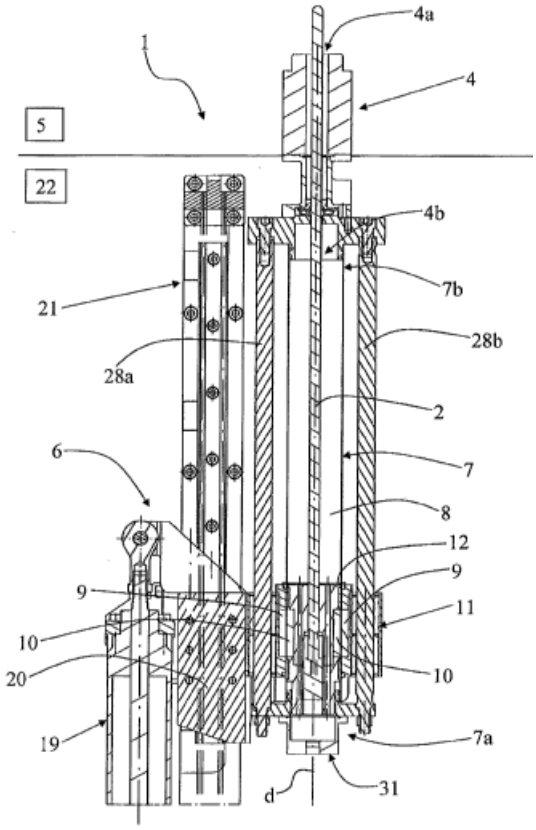

B29C 49/14

Clamps

Definition statement

This place covers:

- EP0434277

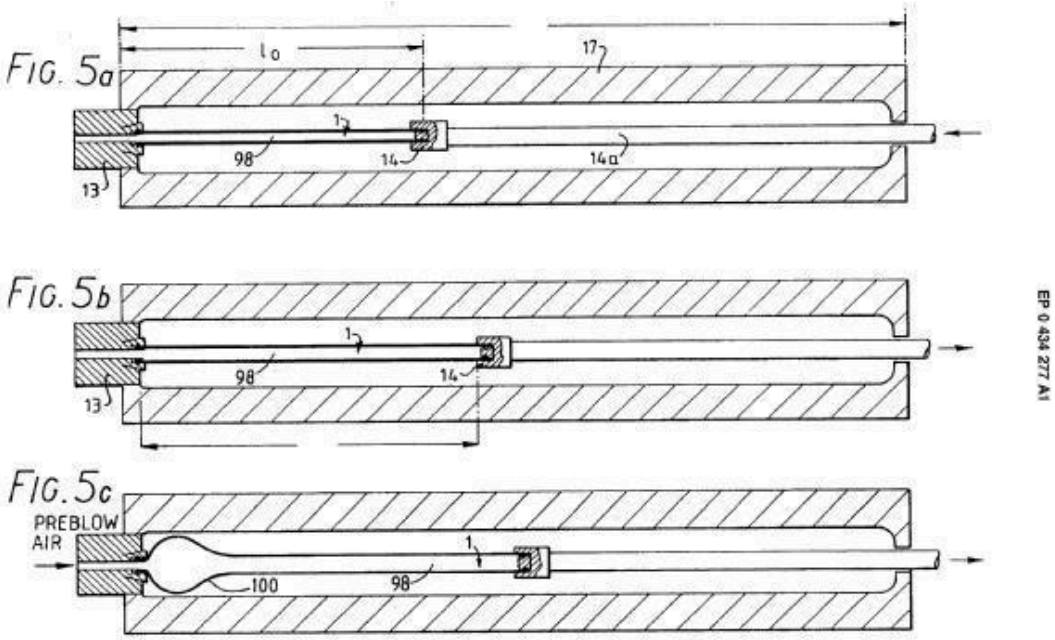

EP 0 434 277 A1

US4442063

Sheet 1 of 3 4,442,063

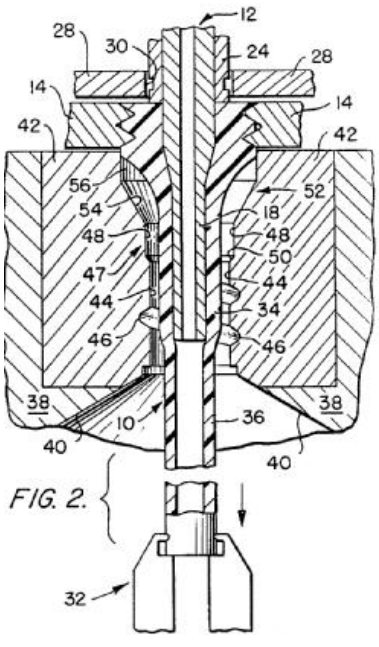

B29C 49/16

using pressure difference {for pre-stretching}, e.g. pre-blowing

Definition statement

This place covers:

Blow-moulding processes, whereby the pressure difference is used to stretch the preform in its longitudinal direction.

Illustrative example of subject matter classified in this group:

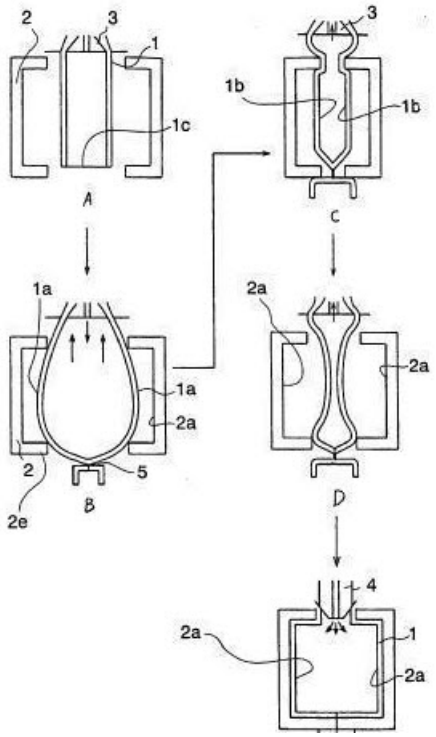

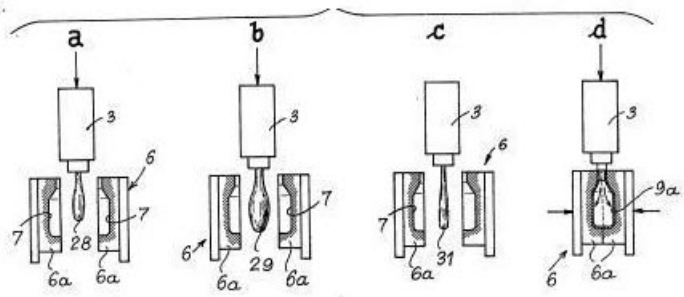

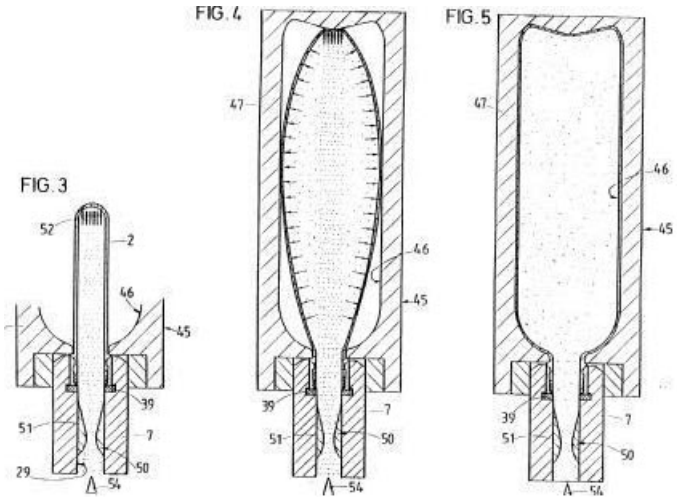

B29C 49/1602

{pre-blowing without using a mould}

Definition statement

This place covers:

Blow-moulding method in which a pre-blowing step does not take place in a mould.

Illustrative example of subject matter classified in this group:

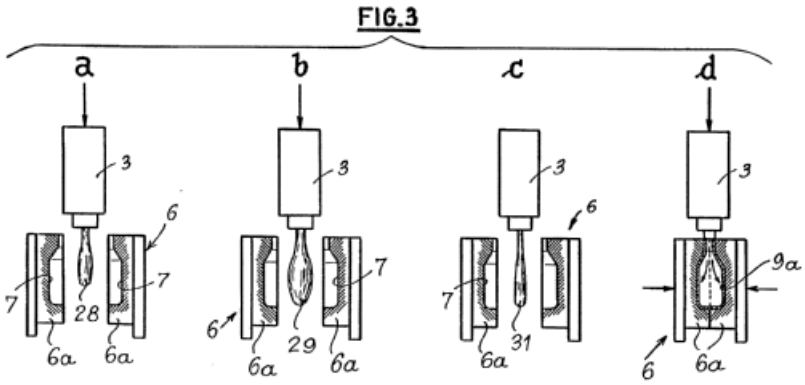

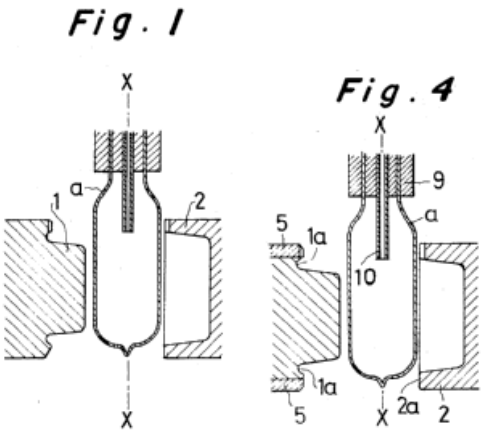

B29C 49/18

using several blowing steps (B29C 49/16 takes precedence)

Definition statement

This place covers:

Blow-moulding using several blowing steps, whereby between each blowing step for a period of time, depressurisation is being applied, thereby causing a period with atmospheric pressure inside the preform/container.

Illustrative example of subject matter classified in this group:

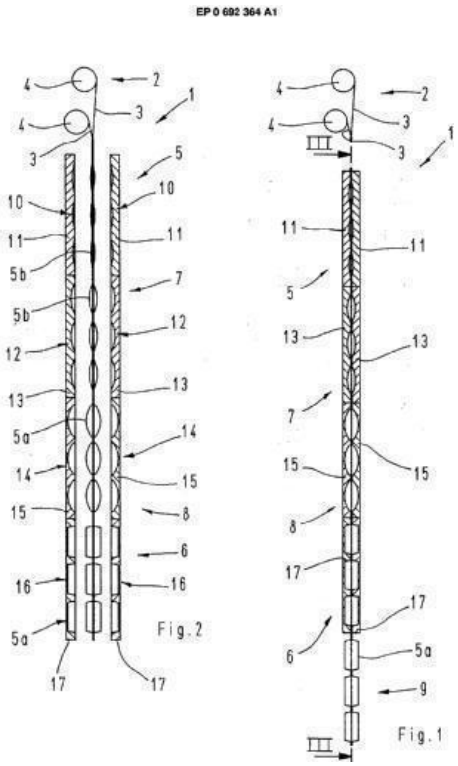

References

Limiting references

This place does not cover:

Multiple blow moulding steps, whereby one step is used to expand the preform in longitudinal direction	B29C 49/16

Informative references

Attention is drawn to the following places, which may be of interest for search:

Multiple blow-moulding steps followed by additional heat shrinking	B29C 49/6472

Special rules of classification

Multiple blow-moulding steps, with longitudinal stretching during each blowing step are additionally classified in B29C 49/08 or one of its subgroups.

As example the following disclosure should be classified B29C 49/12 and B29C 49/18.

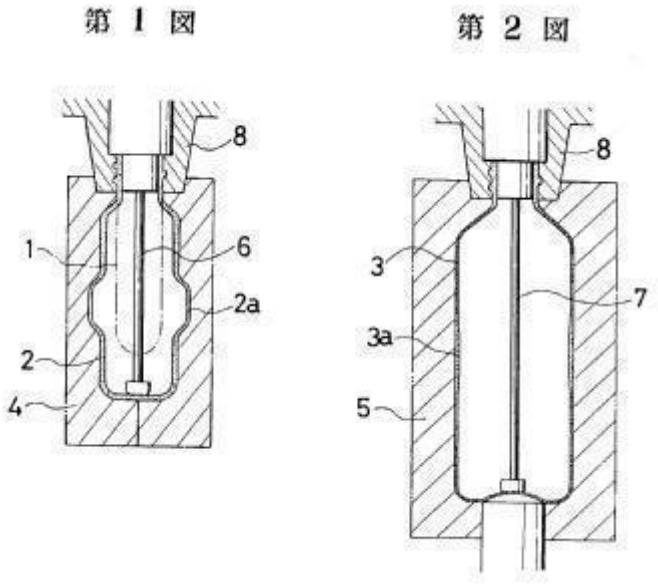

B29C 49/1802

{the first mould cavity being bigger than a second mould cavity}

Definition statement

This place covers:

A blow-moulding method which is characterised by at least two mould cavities: the first cavity is larger than the second, often times to allow for a shrinkage/temperature conditioning step between the two cavities.

Illustrative example of subject matter classified in this group:

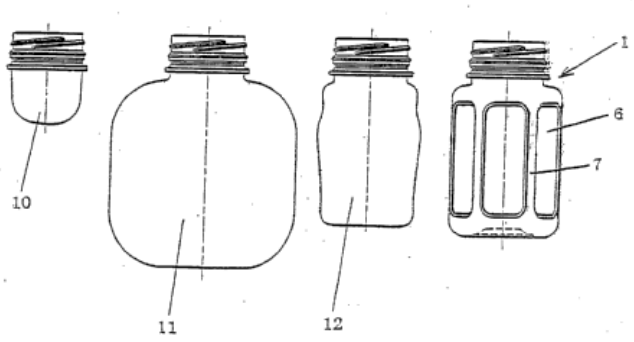

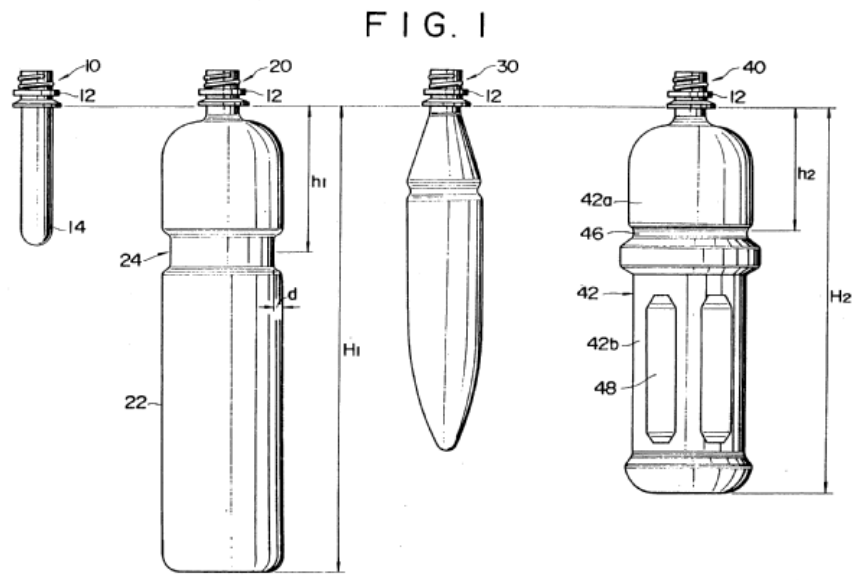

B29C 49/20

of articles having inserts or reinforcements {; Handling of inserts or reinforcements}

Definition statement

This place covers:

- Auxiliary operations or auxiliary means relating to inserts or reinforcements, e.g. handling or transferring of inserts

Special rules of classification

Details of the location of the insert (on the inside or outside of the final article), handling of the inserts (e.g. feeding into the mould) or treatment of the inserts (e.g. preheating) are identified by the allocation of break down Indexing Codes, which are only present at additional information level.

When details of inserts or reinforcements are indicated, then it is highly desirable to allocate additionally the following classification codes for additional information:

- B29K 2601/00 - B29K 2713/02

- B29K 2201/00- B29K 2313/02

B29C 2049/2071

{comprising electronic elements or detection means, e.g. chips, RFIDs or barcodes}

Definition statement

This place covers:

Blow-moulding articles comprising inserts of an electronic nature.

Illustrative example of subject matter classified in this group:

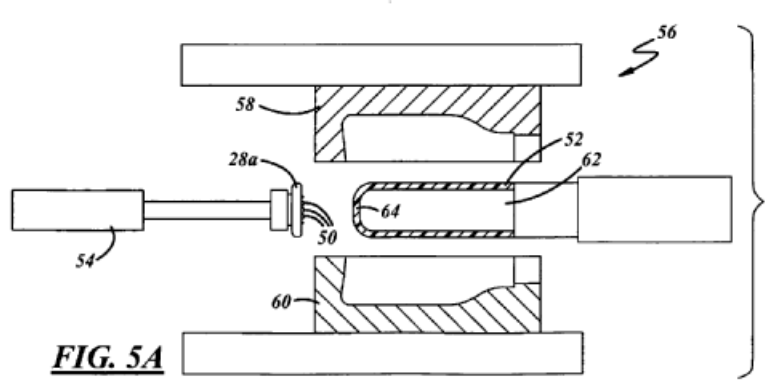

FIG. 5A

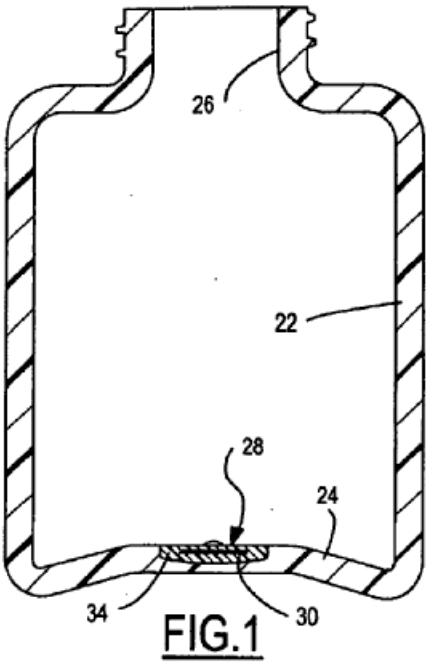

FIG.1

B29C 49/22

using multilayered preforms or parisons

Definition statement

This place covers:

Multilayered parisons produced by extrusion moulding.

Parisons having loose layers before blow-moulding.

Illustrative example of subject matter classified in this group:

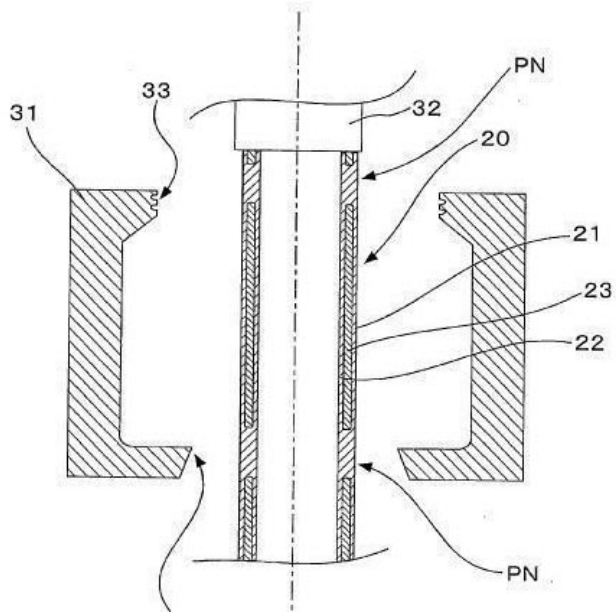

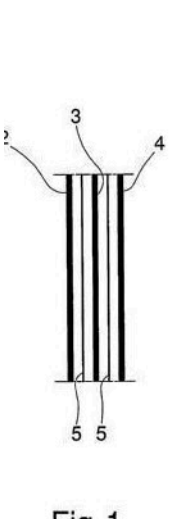

Fig. 1

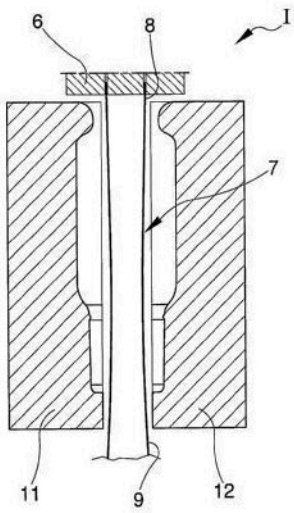

Fig. 2

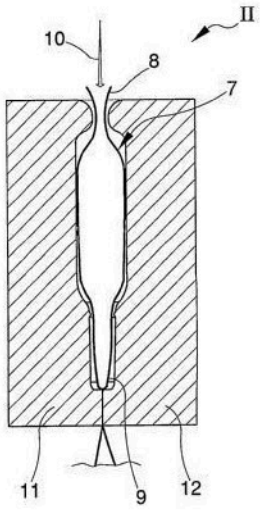

Fig. 3

References

Informative references

Attention is drawn to the following places, which may be of interest for search:

Tubular layered products per se	B32B 1/08
Multilayered plastic containers, e.g. bottles	B65D 1/0215

Special rules of classification

If applicable, it is highly desirable to allocate classification in B29C 2949/07 and subgroups, in particular B29C 2949/30, for information related to the geometrical distribution or dimensions of the layers.

B29C 49/24

Lining or labelling

Definition statement

This place covers:

Lining

Illustrative example of subject matter classified in this group:

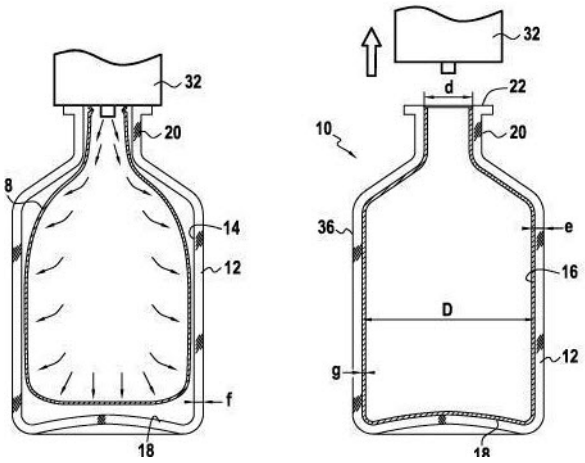

Labelling

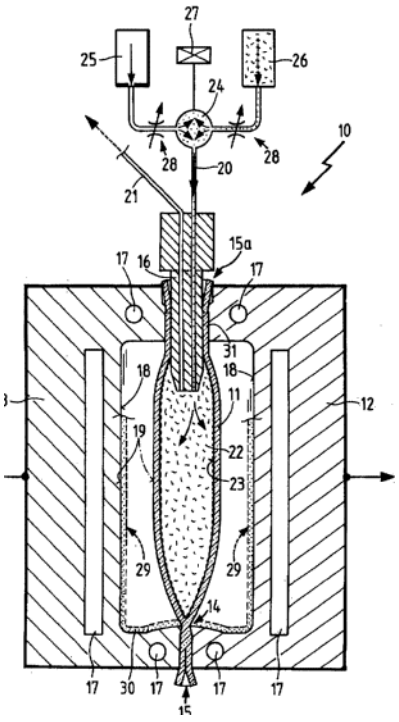

References

Informative references

Attention is drawn to the following places, which may be of interest for search:

Lining or sheeting in general	B29C 63/00
Producing labels	B31D 1/02
Labelling other than flat surfaces in general	B65C 3/00
In mould labelled containers	B65D 23/0864
Labels in general e.g. for thermo adhesion	G09F 3/04

Special rules of classification

If the label itself is specific then the Indexing Code B29L 2031/744 should be allocated

Glossary of terms

In this place, the following terms or expressions are used with the meaning indicated:

Lining	Covering the whole outer and/or inner surface of articles with a heated preform or parison. The heated preform or parison is stretched and three dimensionally deformed.
Labelling	Connecting a label which is inside of a mould to a heated preform or parison while the preform or parison is blow moulded. Often also called "in mould labelling"

B29C 49/2408

{In-mould lining or labelling}

Definition statement

This place covers:

- US5256365

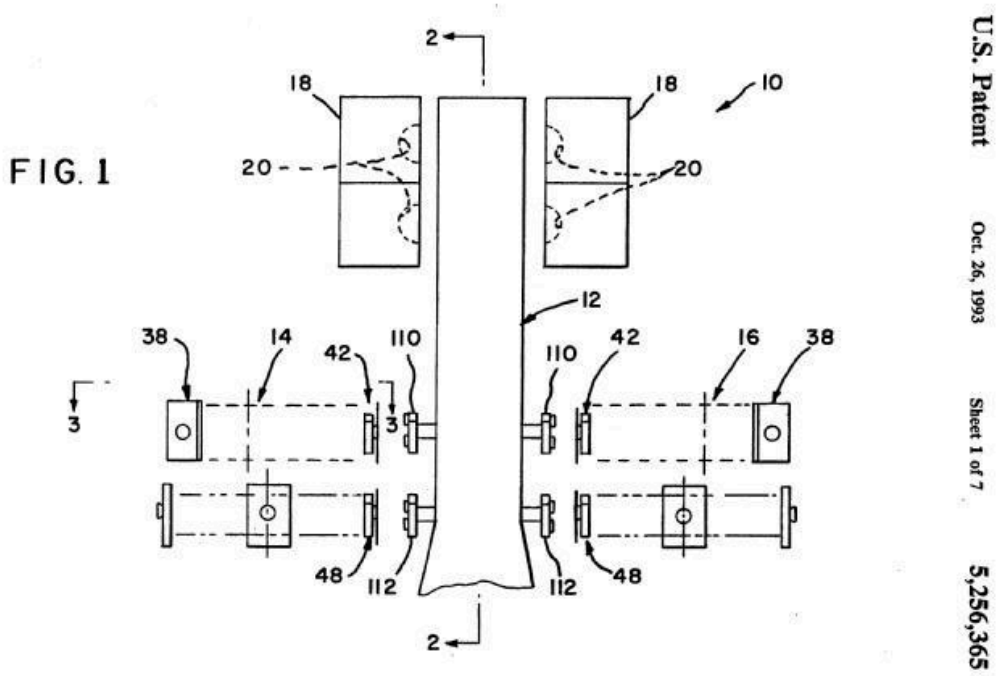

U.S. Patent Oct. 26, 1993 Sheet 1 of 7 5,256,365

- US6264876

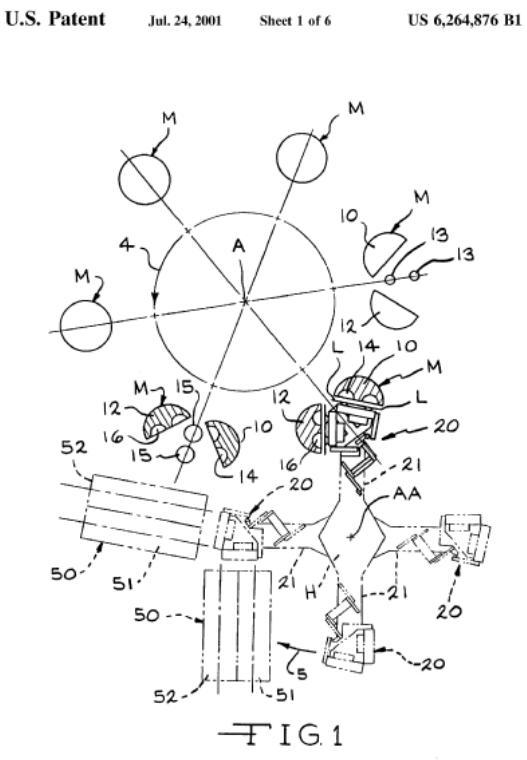

B29C 2049/2442

{while blow-moulding, e.g. the preform expansion deforms the label or lining}

Definition statement

This place covers:

Blow-moulding process/apparatus which uses multi-layered preforms or parisons as the elements to which air is applied to cause shaping.

B29C 49/249

{explicit labelling}

Definition statement

This place covers:

Labelling process which includes a method for moulding a plastic container within a mould including an RFID tag to generate a container which leaves a mould having an RFID tag bonded between the

container and a label. This method provides for an integrally, extrusion blow-moulded container, label and RFID tag combination.

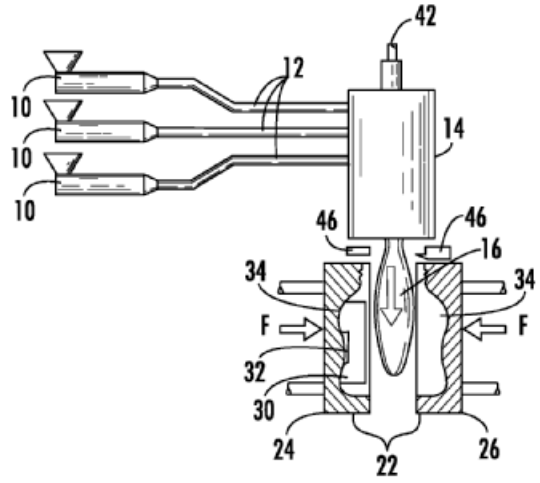

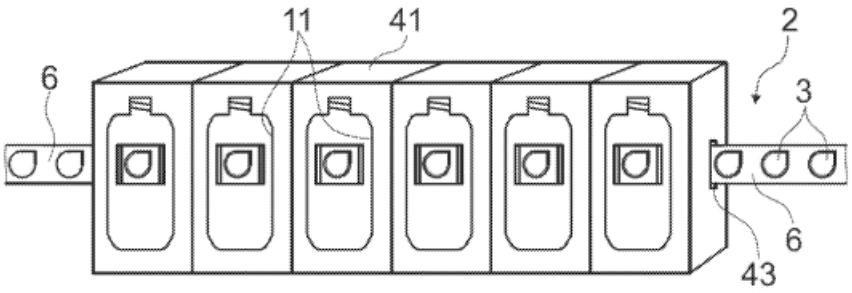

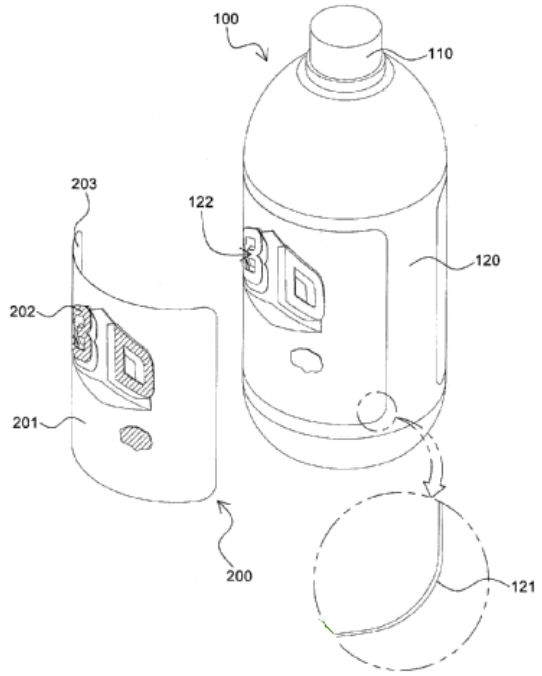

B29C 49/251

{explicit lining (B29C 49/26 takes precedence)}

Definition statement

This place covers:

Illustrative example of subject matter classified in this group:

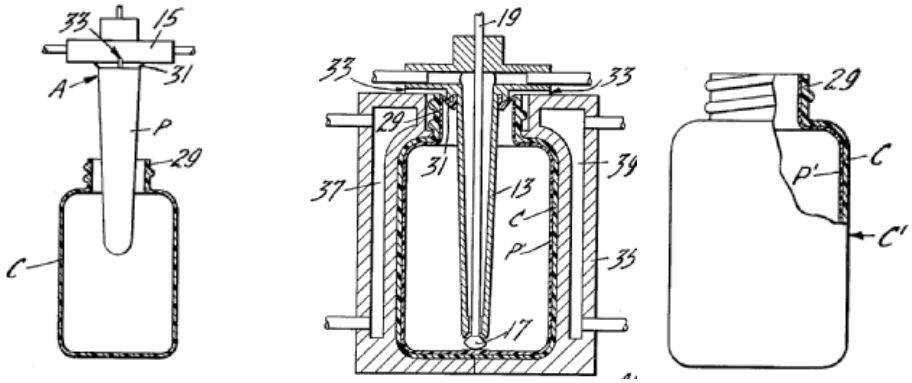

References

Limiting references

This place does not cover:

Inner lining of tubes	B29C 49/26

B29C 49/26

inner lining of tubes

Definition statement

This place covers:

Illustrative example of subject matter classified in this group:

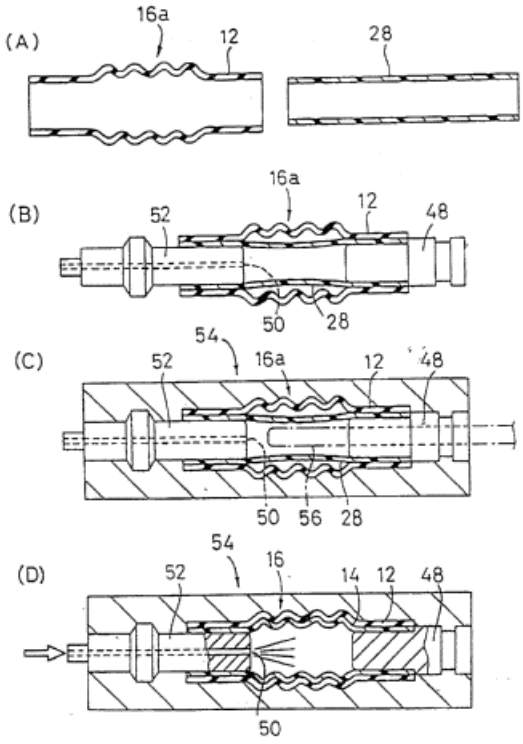

References

Informative references

Attention is drawn to the following places, which may be of interest for search:

Coating the interior of hollow articles by extrusion moulding	B29C 48/152
Lining of internal surfaces by applying preformed layers or sheets of plastic	B29C 63/26

B29C 49/28

Blow-moulding apparatus

Special rules of classification

- If the alleged inventive information of the document to be classified is already classified somewhere else then the classification as provided for in B29C 49/28 - B29C 49/40 should be allocated as additional information only.

B29C 49/28002

{designed for reduced size or for experiments, e.g. lower inertia, transportable or experimental apparatus}

Definition statement

This place covers:

Blow-moulding machines which are smaller in scale than other machines to accommodate experimental environments or situations where transportability is ideal.

Illustrative example of subject matter classified in this group:

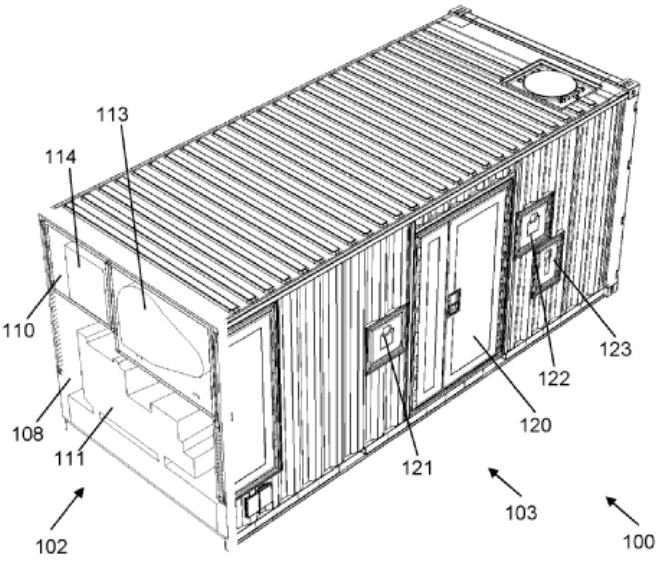

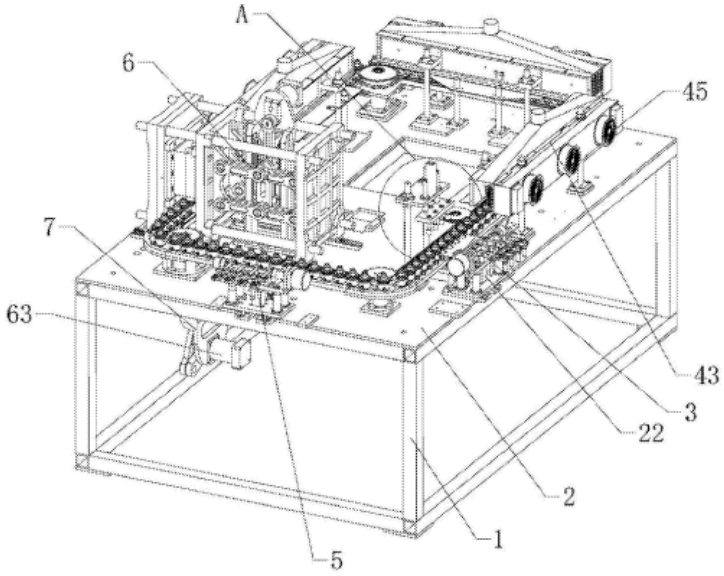

B29C 49/28004

{designed for easy access by operator}

Definition statement

This place covers:

A blow-moulding machine which is designed to be easily accessed/operated by an operator.

B29C 49/28006

{having special frame}

Definition statement

This place covers:

A blow-moulding machine which is characterised by a particular frame configuration.

Illustrative example of subject matter classified in this group:

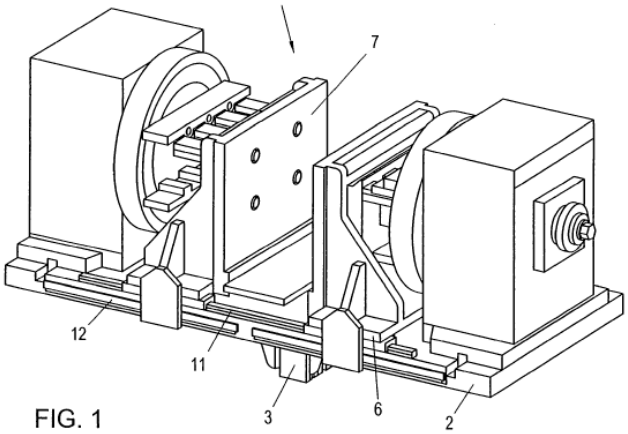

FIG. 1

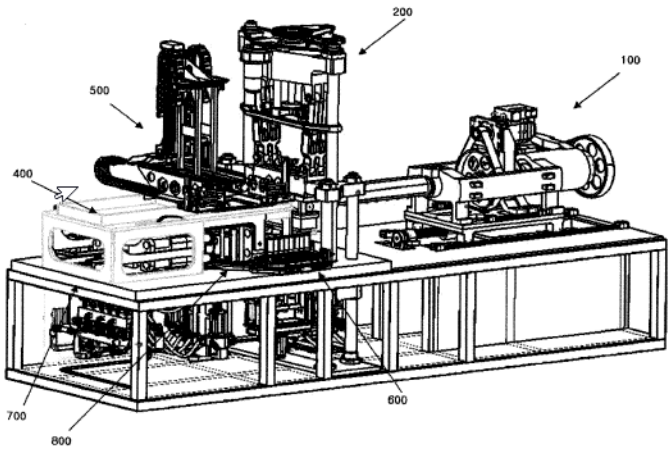

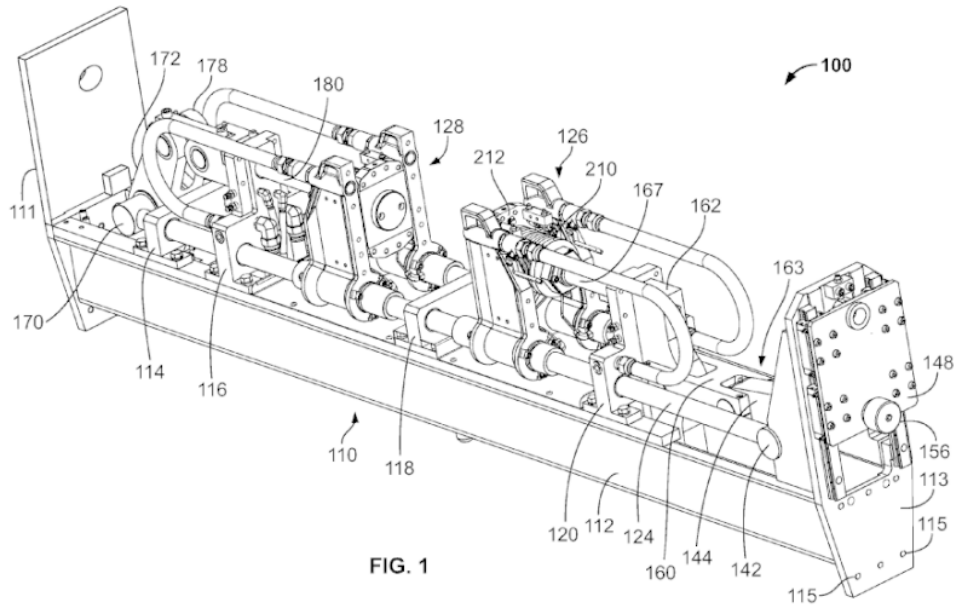

FIG. 1

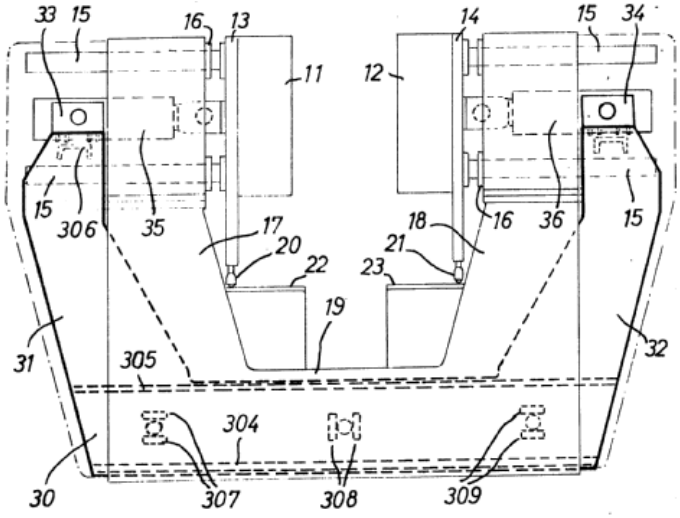

B29C 49/28008

{mounting, exchanging or centering machine parts, e.g. modular parts}

Definition statement

This place covers:

A blow-moulding machine which includes interchangeable/modular parts, allowing for ease of mounting, exchanging or repositioning.

Illustrative example of subject matter classified in this group:

FIG. 17 shows a presentation as an illustration of the process of changing a handling part. Here, the change arm 54 is essentially moved upwards vertically (cf. double arrow Y) by the respective joints, in order to exchange the handling parts, here heating mandrels 96 and shielding plates 98. It is possible

to, at first, remove the existing handling parts 96 and 98, then turn the changing element 53 by 180° in order to arrange immediately the new handling parts on the heating device 50.

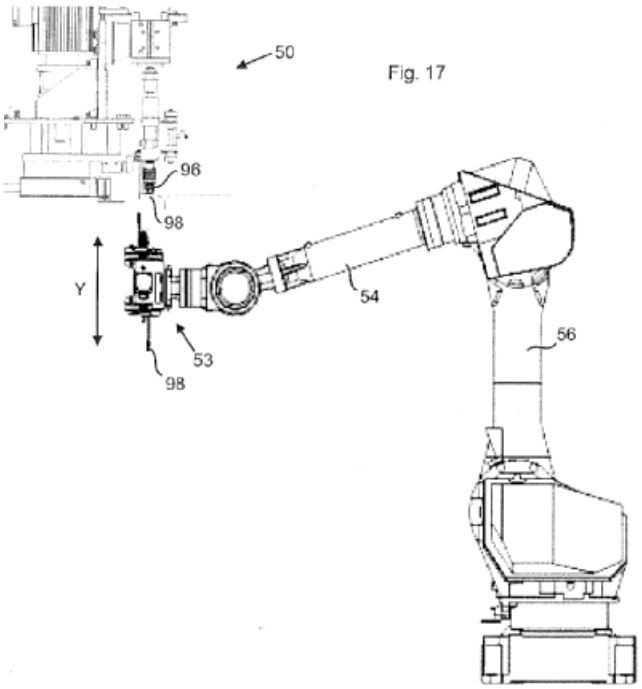

Fig. 17

B29C 49/28012

{using several moulds whereby at least one mould is different in at least one feature, e.g. size or shape (B29C 49/0025 takes precedence)}

Definition statement

This place covers:

A blow-moulding machine which includes several moulds having different features than each other, e.g. size, shape.

References

Limiting references

This place does not cover:

Making articles of indefinite length by subsequent mould cavities being different	B29C 49/0025

B29C 49/32

moving "to and fro"

Definition statement

This place covers:

- US5976452

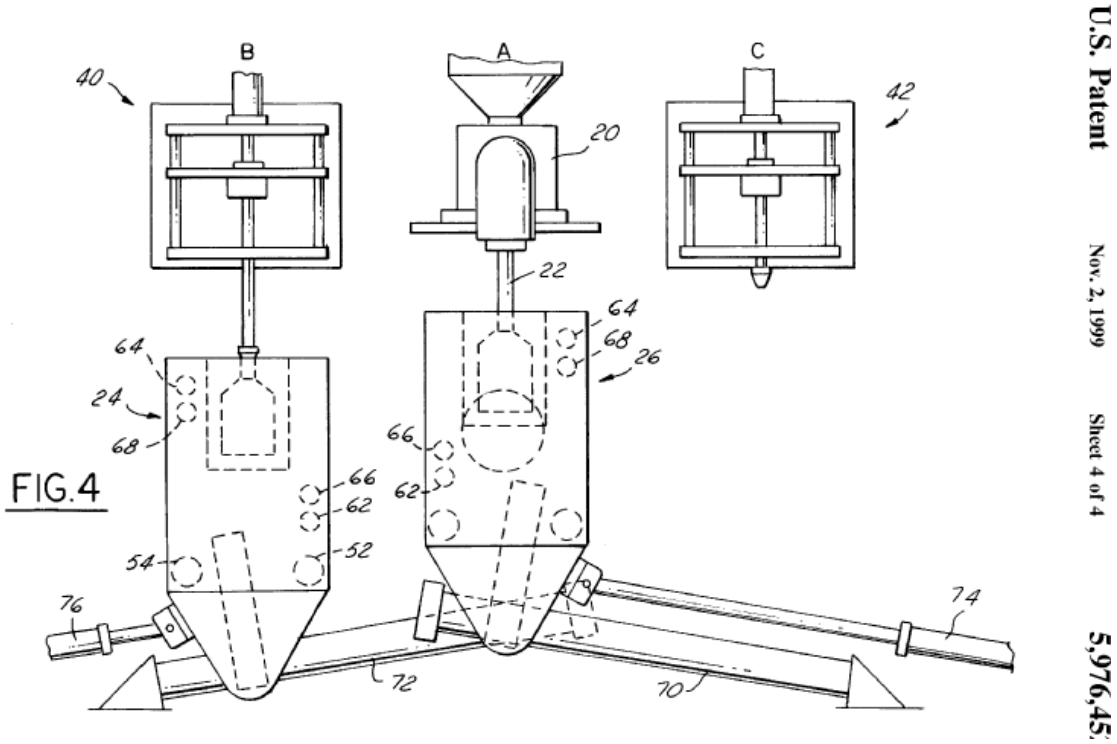

B29C 49/34

the mould parts moving "hand-over-hand"

Definition statement

This place covers:

- US4988279

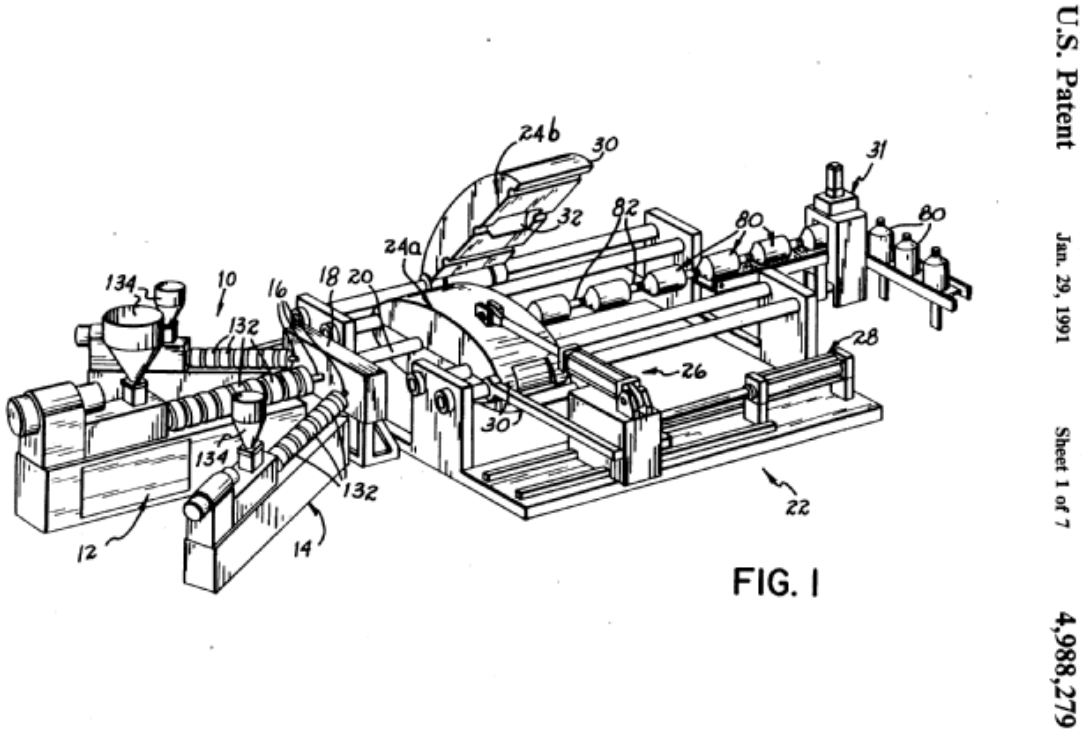

FIG. 1

B29C 49/36

rotatable about one axis

Definition statement

This place covers:

- DE102004057102

DE 10 2004 057 102 A1 2006.06.01

Anhängende Zeichnungen

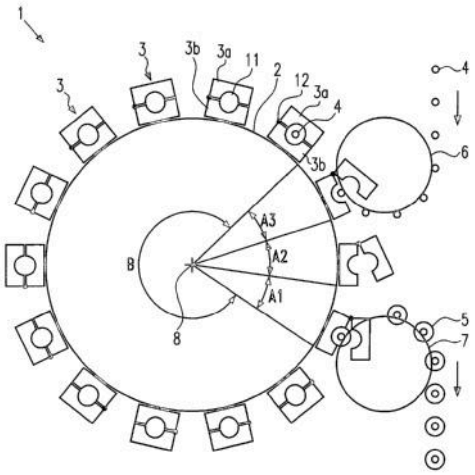

US5433916

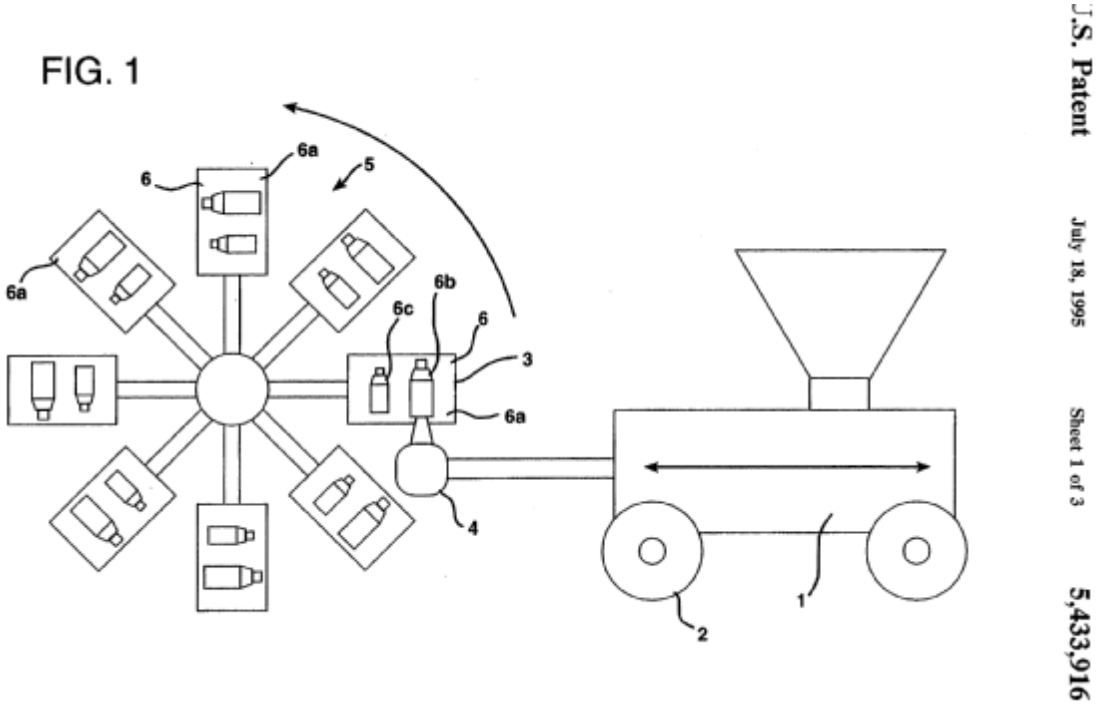

U.S. Patent July 18, 1995 Sheet 1 of 3 5,433,916

B29C 49/38

mounted on movable endless supports {([B29C 49/0021](#) takes precedence)}

Definition statement

This place covers:

- articles of definitive length, bottles

- US3597516

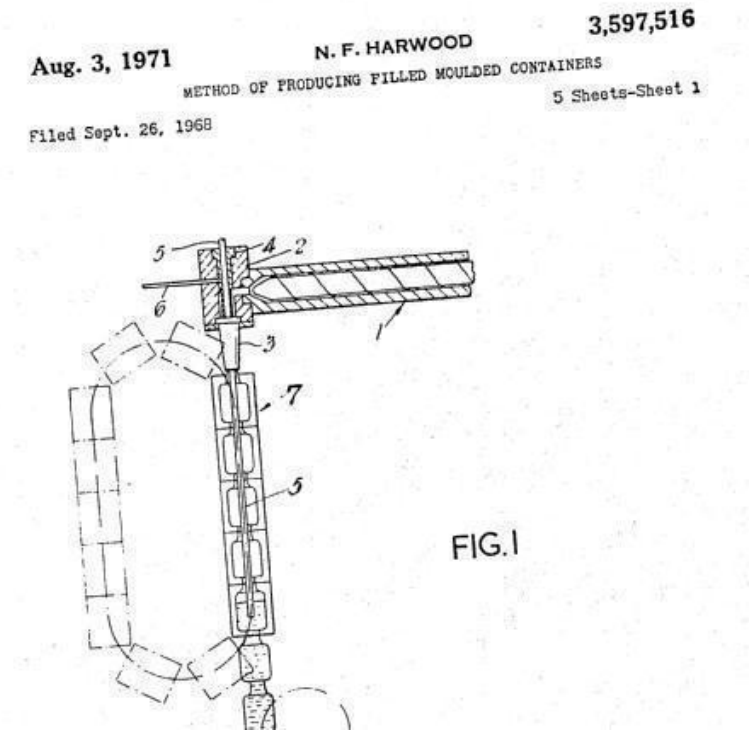

- JP3197117

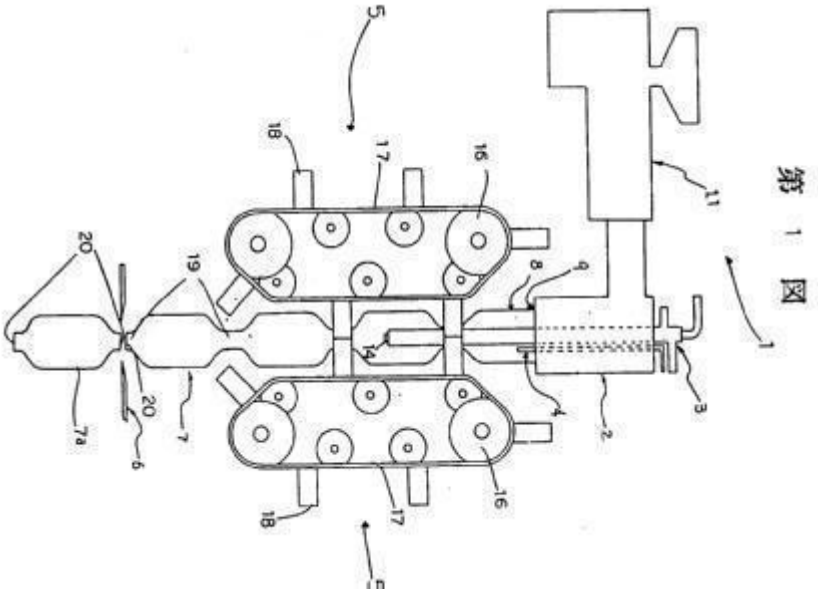

- DE102008006073

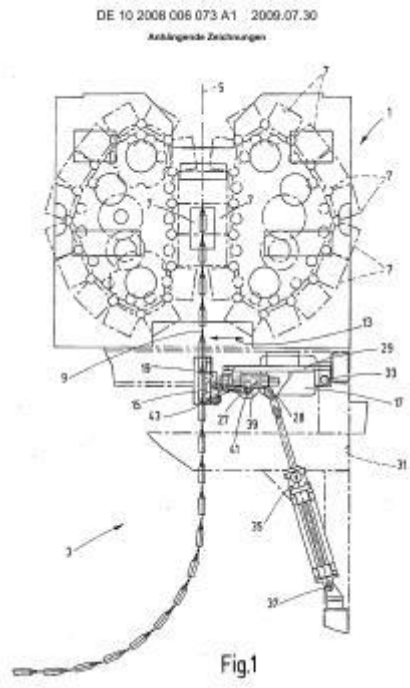

Fig.1

References

Limiting references

This place does not cover:

Using moulds movable in a closed path for blow moulding of articles of indefinite length	B29C 49/0021

B29C 49/40

on co-operating drums

Definition statement

This place covers:

- DE2210445

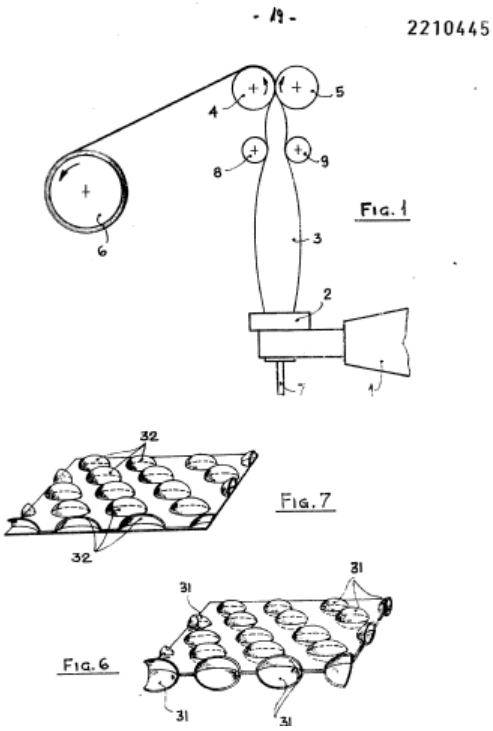

B29C 49/42

Component parts, details or accessories; Auxiliary operations

Definition statement

This place covers:

Details of extrusion dies used during blow-moulding.

Closing parison ends before blow-moulding e.g. with a fluid stream or by grippers.

Antistatic treatment of preforms.

Cleaning of preforms.

Sterilisation of preforms.

Mould change.

Cutting and recycling material.

Avoiding malfunctioning.

References

Informative references

Attention is drawn to the following places, which may be of interest for search:

Handling of moulds between a mould store and a moulding machine in general	B29C 31/006
Maintenance of moulds namely cleaning of moulds in general	B29C 33/72
Extrusion nozzles or dies in general	B29C 48/30
Sterilisation in general	A61L 2/00

B29C 49/4205

{Handling means, e.g. transfer, loading or discharging means (handling of inserts or reinforcements B29C 49/20; handling of linings or labels B29C 49/2408)}

Definition statement

This place covers:

Gripping and holding means for preforms, parisons or blown articles.

Adjustable transporting means depending on the size of the preforms, parisons or blown articles.

Air conveyors for preforms or blown articles.

Orientating unorientated preforms.

Feeding of preforms or parisons.

Illustrative example of subject matter classified in this group:

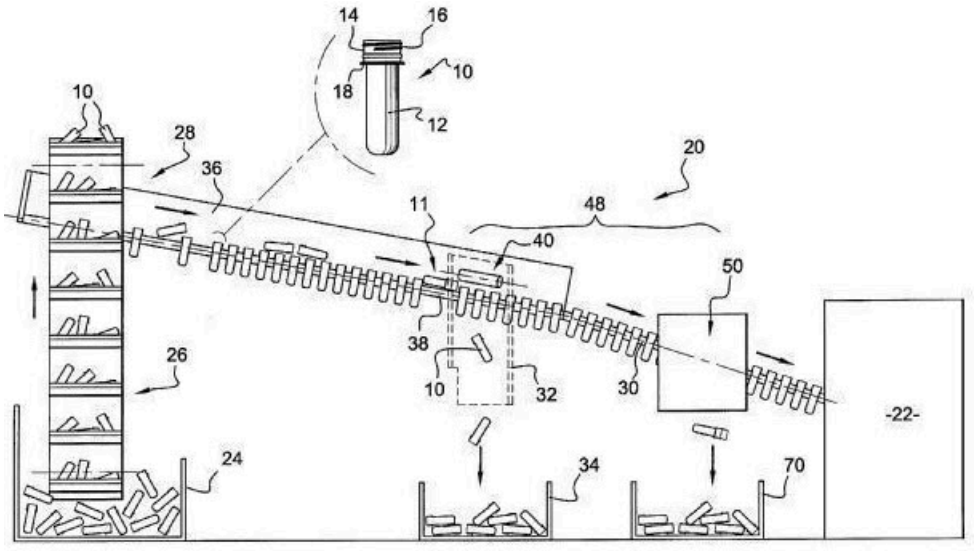

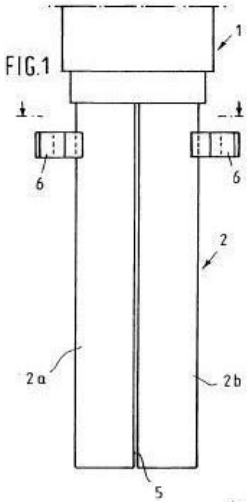
FIG.1
1
6
6
2
2a
2b
5

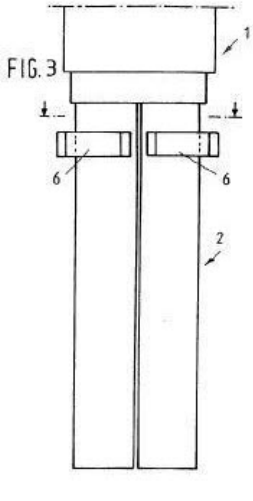
FIG.3
1
6
6
2

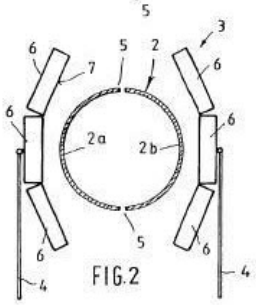
3
6
5
2
7
6
6
2a
2b
6
5
6
4
4
FIG.2

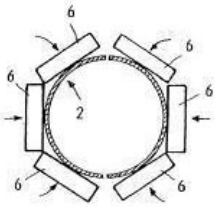
6
6
6
2
6
6
6
FIG.4

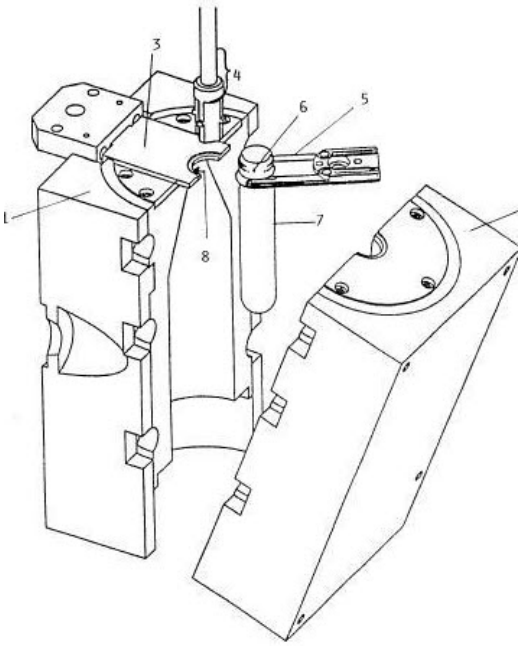
3
4
6
5
7
8

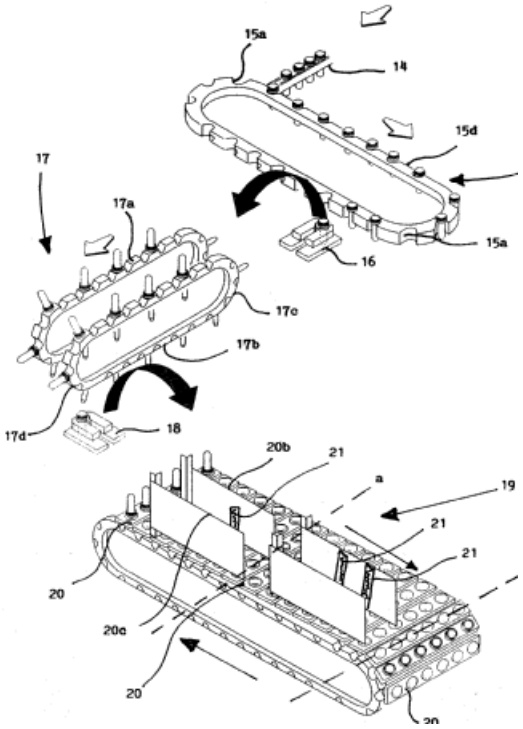

References

Limiting references

This place does not cover:

Handling of inserts or reinforcements	B29C 49/20
Handling of linings or labels	B29C 49/2408

Informative references

Attention is drawn to the following places, which may be of interest for search:

Handling materials in general	B65G 47/00

B29C 49/42053

{Stripping preforms from moulds, e.g. from injection moulds or cores}

Definition statement

This place covers:

Auxiliary blow-mould element which facilitates removal of a preform from mould elements.

Illustrative example of subject matter classified in this group:

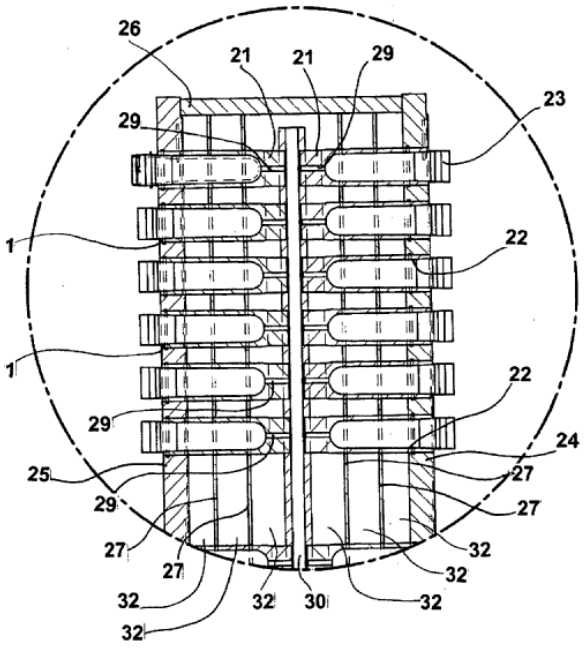

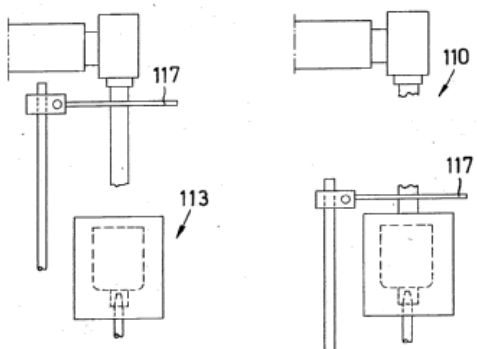

FIG. 4a

FIG. 4b

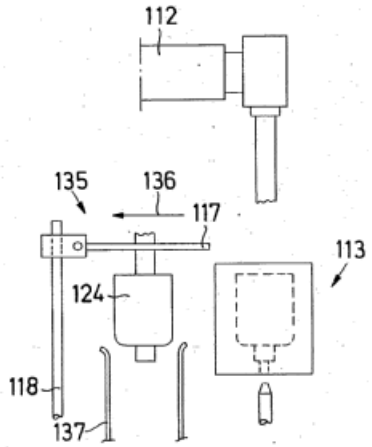

FIG. 4c

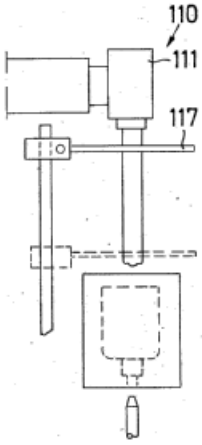

FIG. 4d

B29C 49/42055

{De-stacking preforms, e.g. delivered in a stacked configuration}

Definition statement

This place covers:

Auxiliary blow-mould element which unstacks preforms which are originally arranged in a stacked configuration.

Illustrative example of subject matter classified in this group:

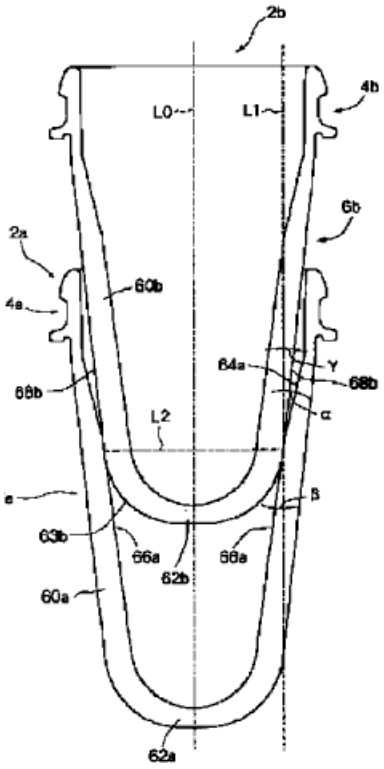

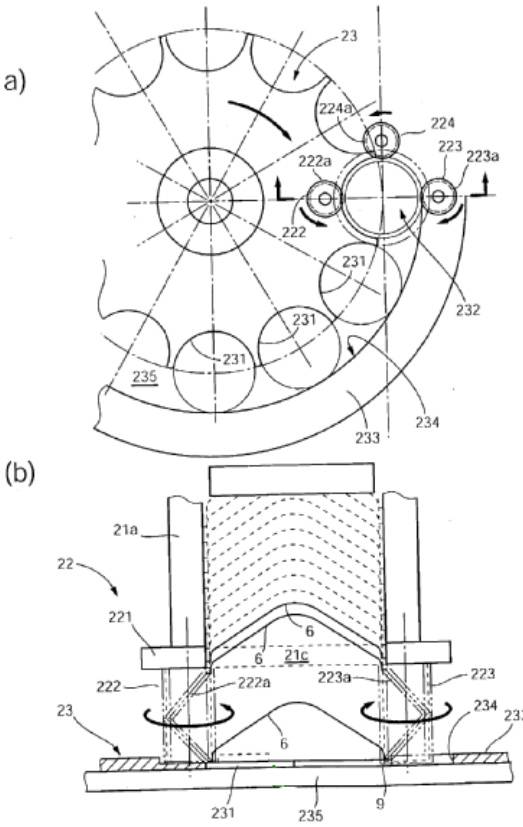

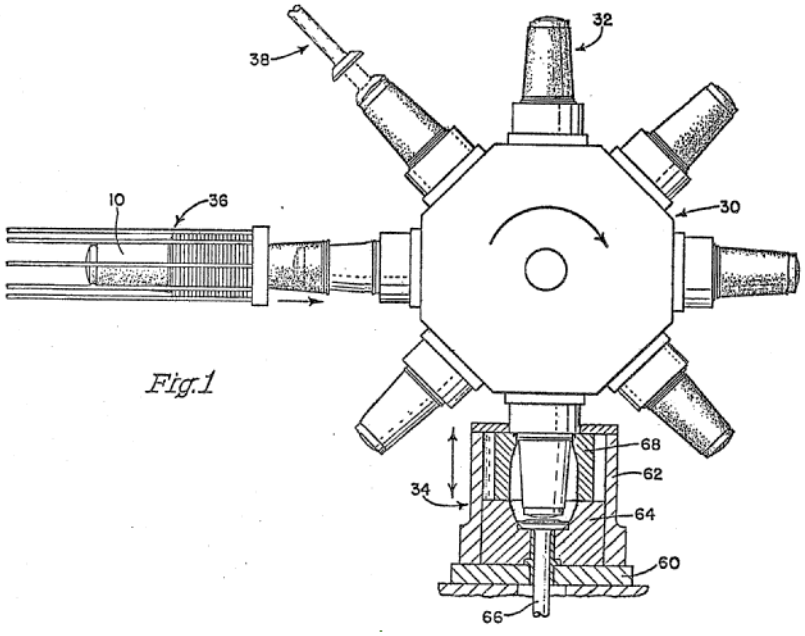

Fig.1

B29C 49/42057

{Aligning disorderly arranged preforms, e.g. delivered disorderly}

Definition statement

This place covers:

Auxiliary blow-mould element which facilitates organization of preforms which are originally not arranged in any sort of order.

Illustrative example of subject matter classified in this group:

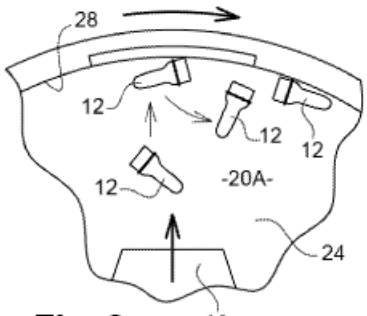

Fig. 6

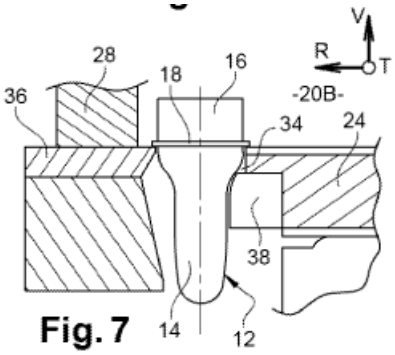

Fig. 7

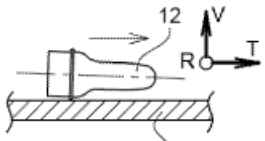

Fig. 8

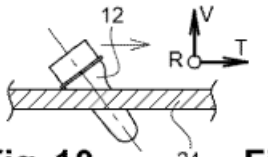

Fig. 10

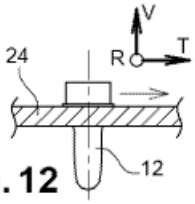

Fig. 12

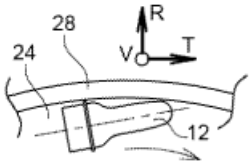

Fig. 9

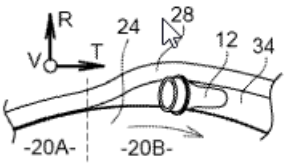

Fig. 11

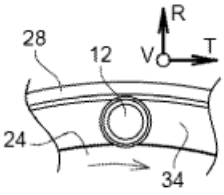

Fig. 13

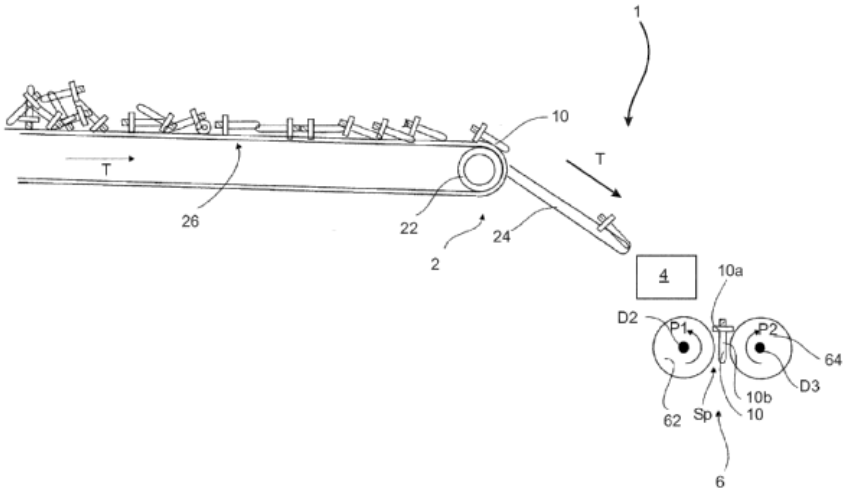

B29C 49/42059

{Aligning of preforms getting stuck, unaligned or stacked during transport}

Definition statement

This place covers:

Preform handling process or method which would correct any preforms which are not oriented in the proper way, e.g. tilted, misaligned.

Illustrative example of subject matter classified in this group:

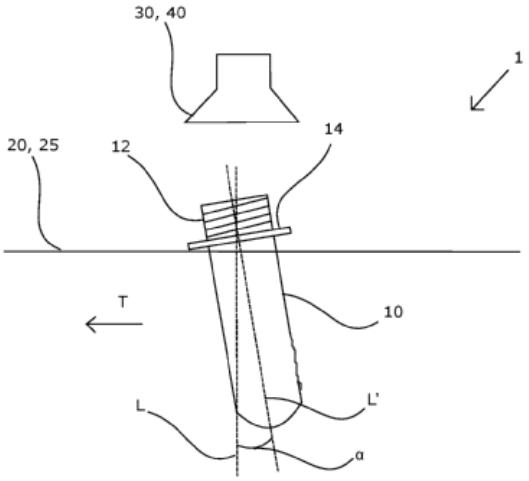

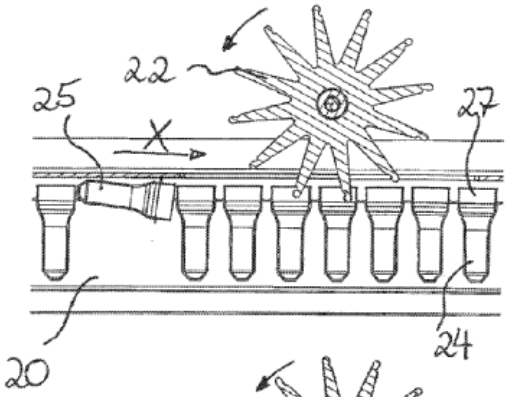

Fig.3

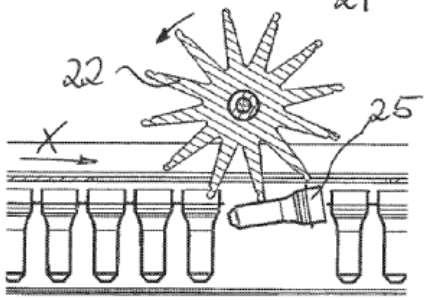

Fig.4

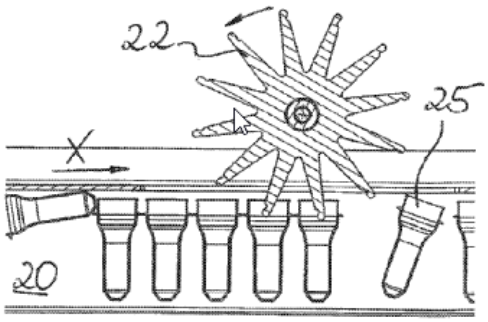

Fig.5

B29C 49/42061

{Means for correcting, aligning or straighten preforms, e.g. gripper with correcting means}

Definition statement

This place covers:

Structures associated with the handling means that correct or ensure the proper orientation of the preforms.

Illustrative example of subject matter classified in this group:

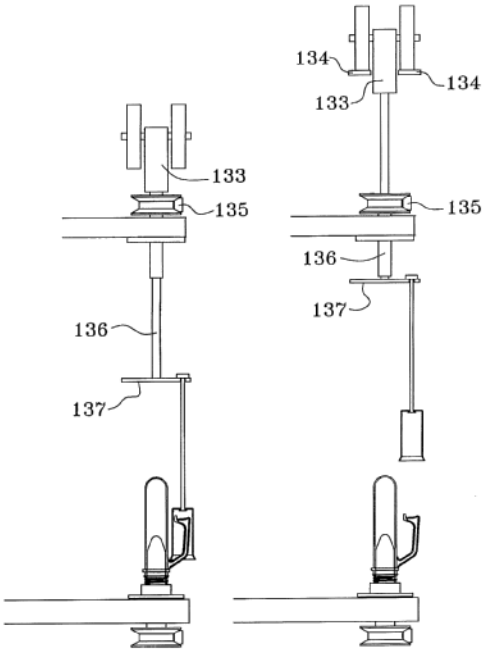

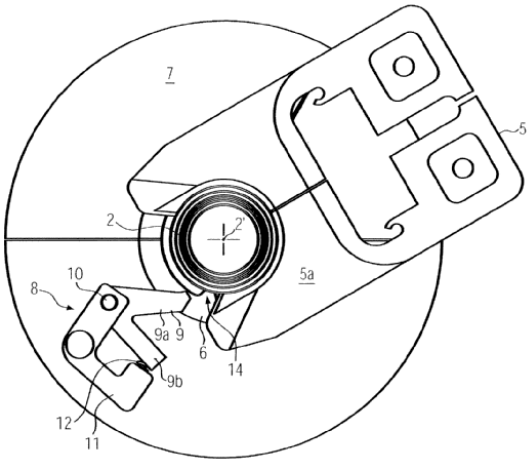

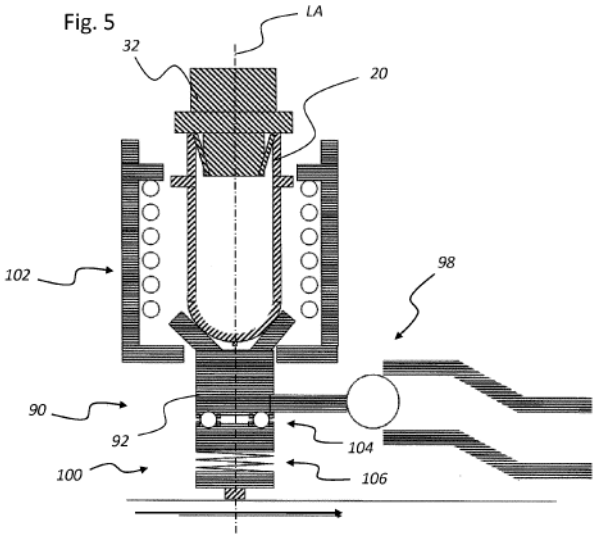

B29C 49/42063

{in relation to the mould, e.g. preform centring means in the mould}

Definition statement

This place covers:

Structures associated with the handling means that correct or ensure the proper orientation of the preforms with respect to the mould.

Illustrative example of subject matter classified in this group:

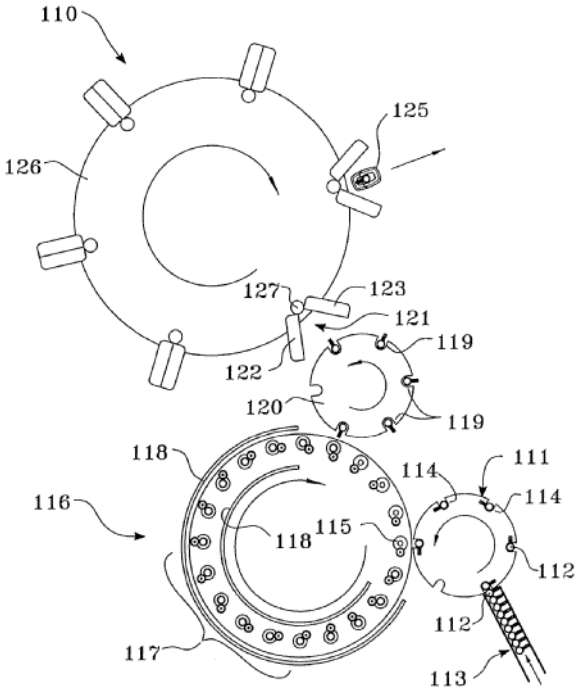

B29C 49/42065

{Means specially adapted for transporting preforms}

Definition statement

This place covers:

Handling means structures which move, transfer, grip, carry, or otherwise relocate preforms from one location to another location.

Illustrative example of subject matter classified in this group:

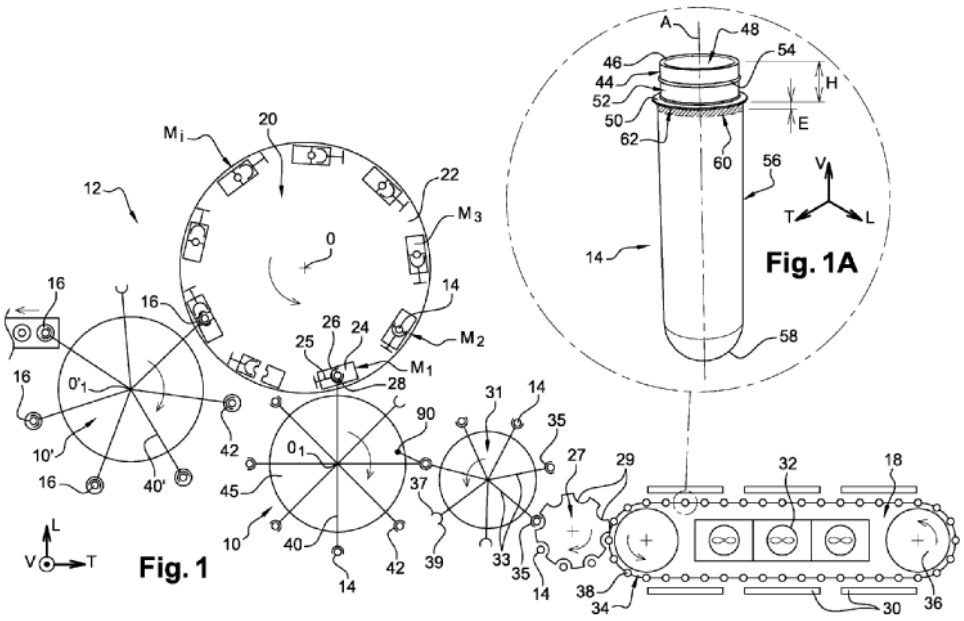

Fig. 1

Fig. 1A

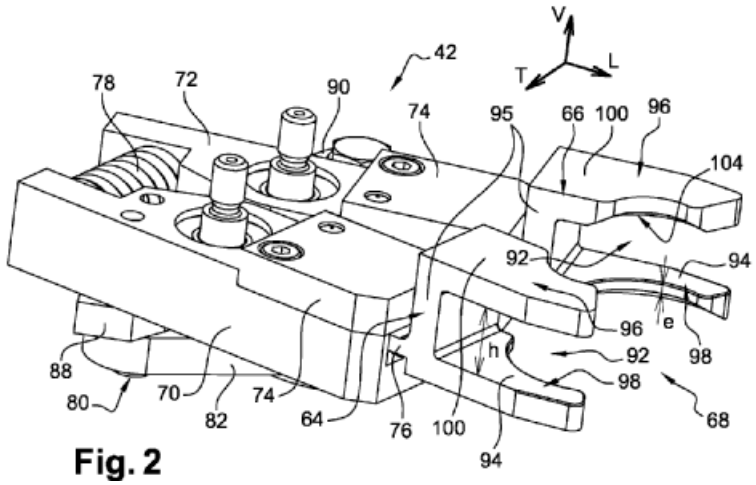

Fig. 2

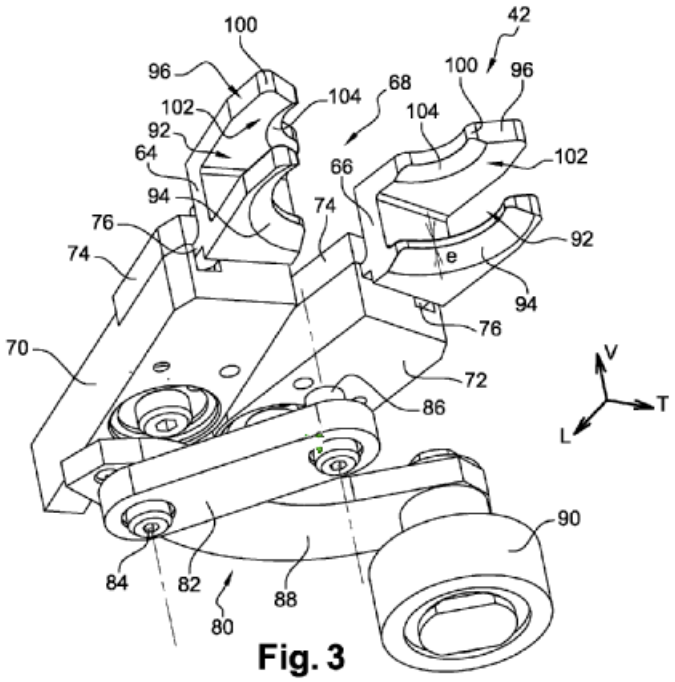

Fig. 3

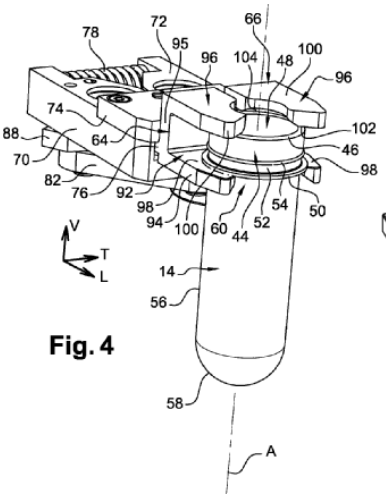

Fig. 4

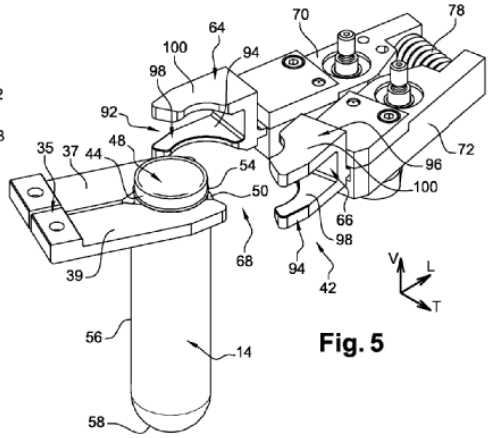

Fig. 5

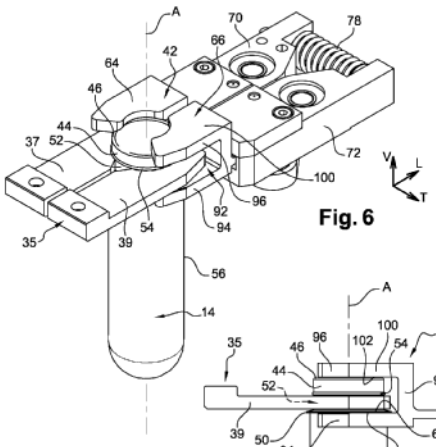

Fig. 6

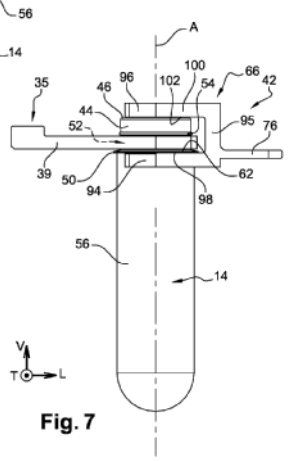

Fig. 7

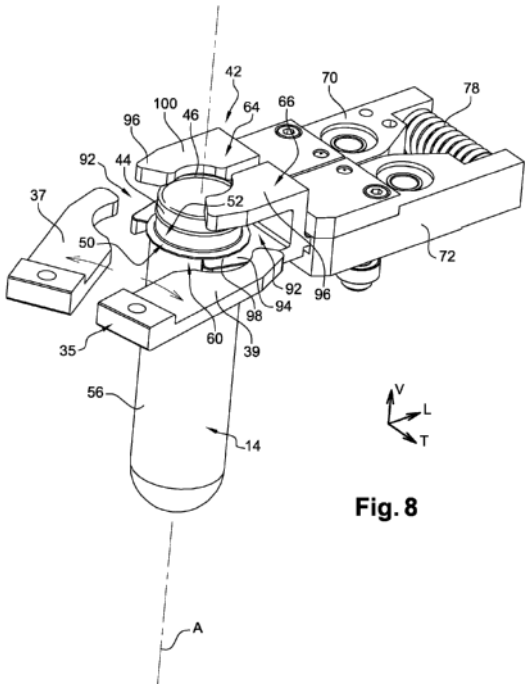

Fig. 8

B29C 49/42069

{Means explicitly adapted for transporting blown article}

Definition statement

This place covers:

Handling means structures which are only for transporting the blown article.

Illustrative example of subject matter classified in this group:

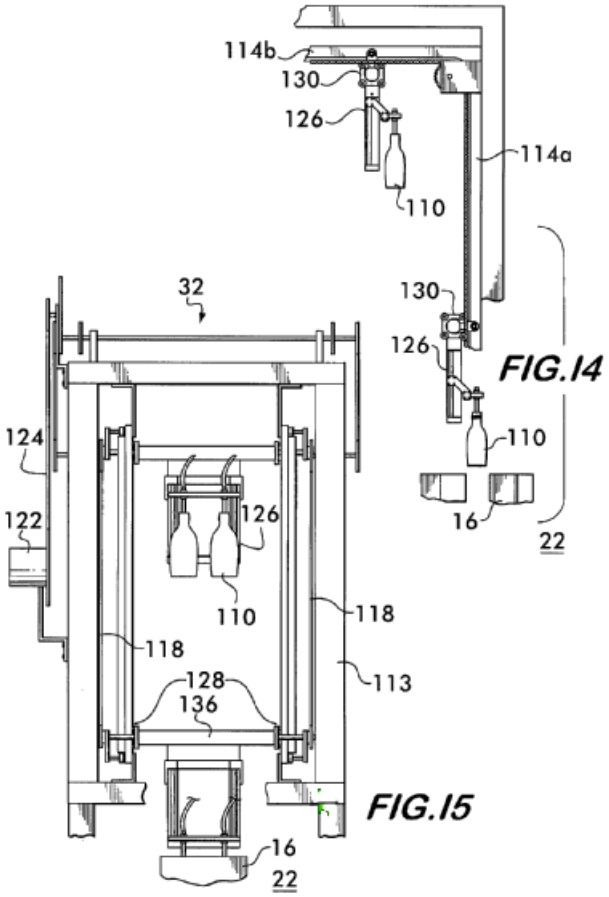

FIG.14

FIG.15

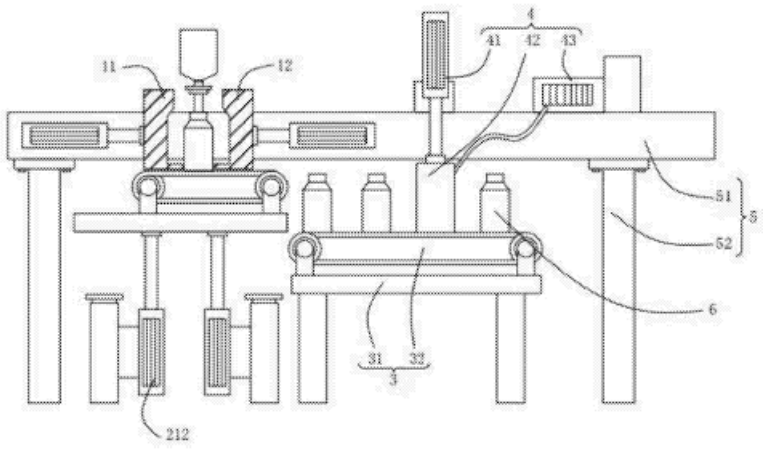

B29C 49/4207

{with stacking means, e.g. stacking the articles for further transport}

Definition statement

This place covers:

Structures which stack, in any orientation, the blown articles for transporting purposes.

Illustrative example of subject matter classified in this group:

Air nozzle 101 lifts containers 1 into a cylindrical stacker.

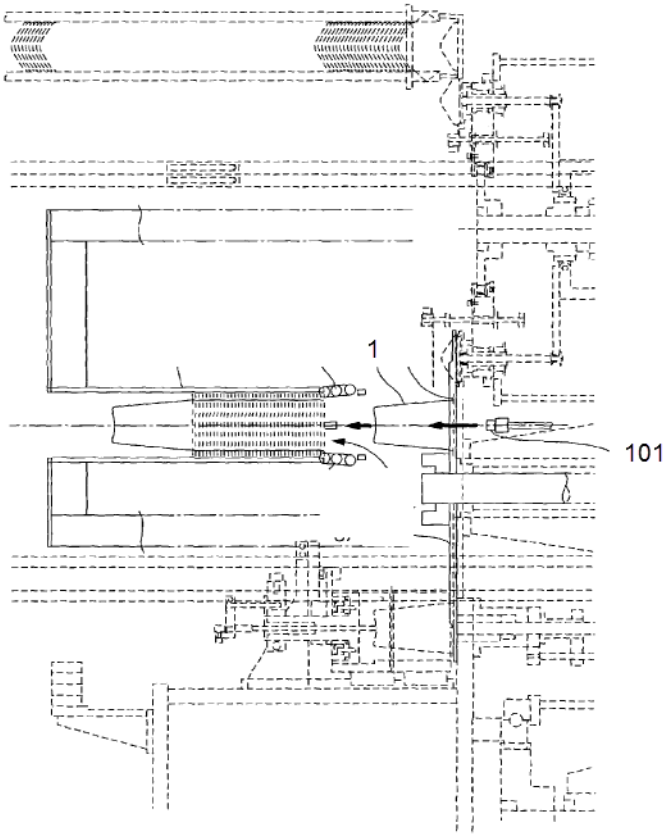

B29C 49/42075

{with pivoting clamps}

Definition statement

This place covers:

Illustrative example of subject matter classified in this group:

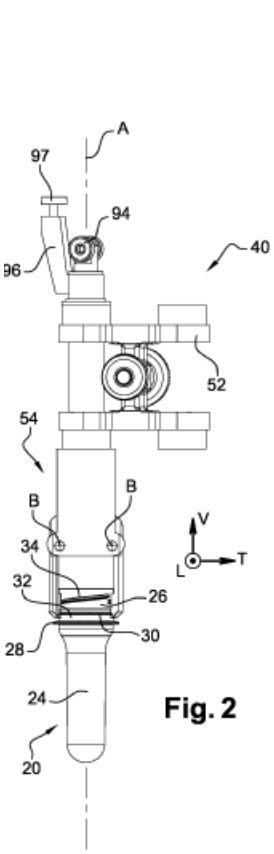

Fig. 2

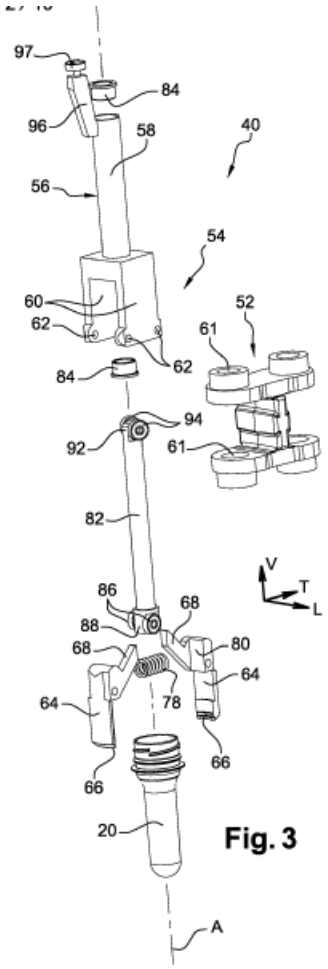

Fig. 3

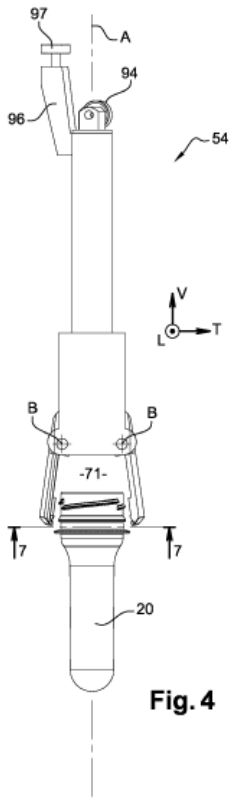

Fig. 4

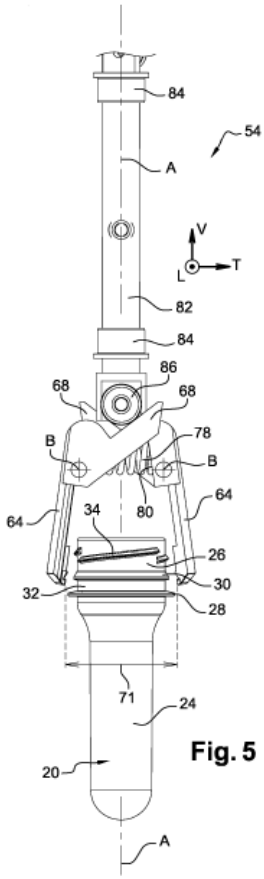

Fig. 5

B29C 49/42077

{with U-shaped holder}

Definition statement

This place covers:

Illustrative example of subject matter classified in this group:

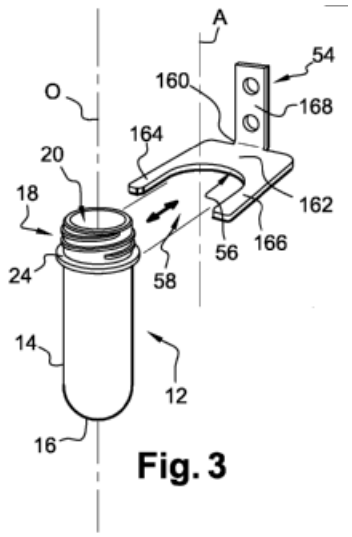

Fig. 3

B29C 49/42079

{using vacuum for gripping}

Definition statement

This place covers:

Illustrative example of subject matter classified in this group:

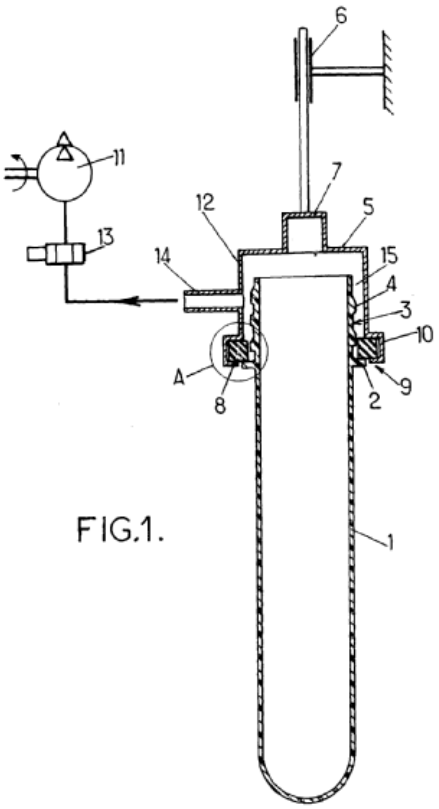

FIG.1.

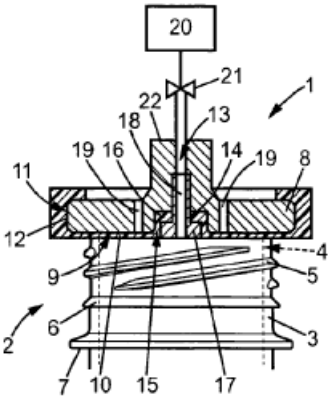

FIG. 1

B29C 49/42081

{adjustable for different preform size}

Definition statement

This place covers:

Illustrative example of subject matter classified in this group:

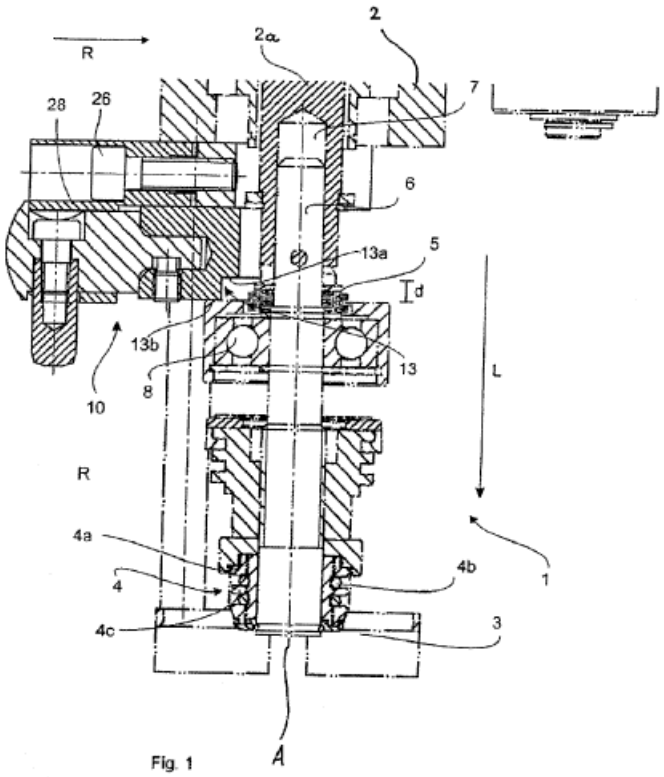

Fig. 1

B29C 49/42083

{being inflatable}

Definition statement

This place covers:

Illustrative example of subject matter classified in this group:

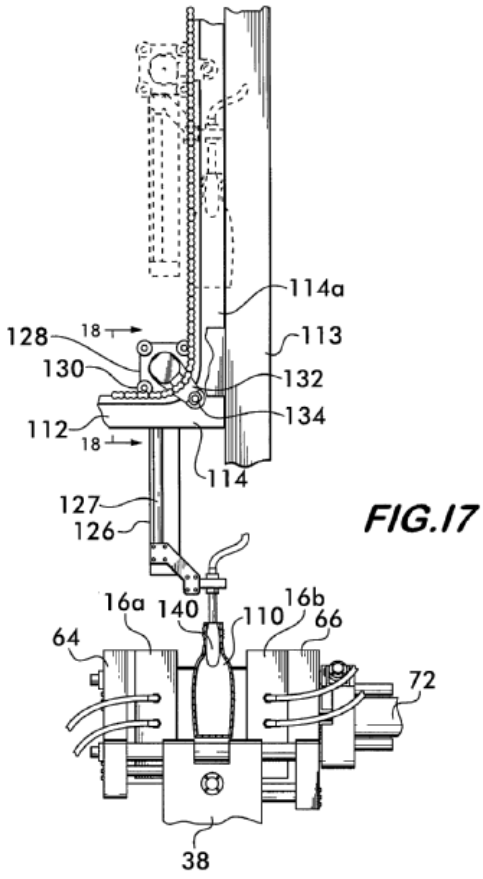

FIG.17

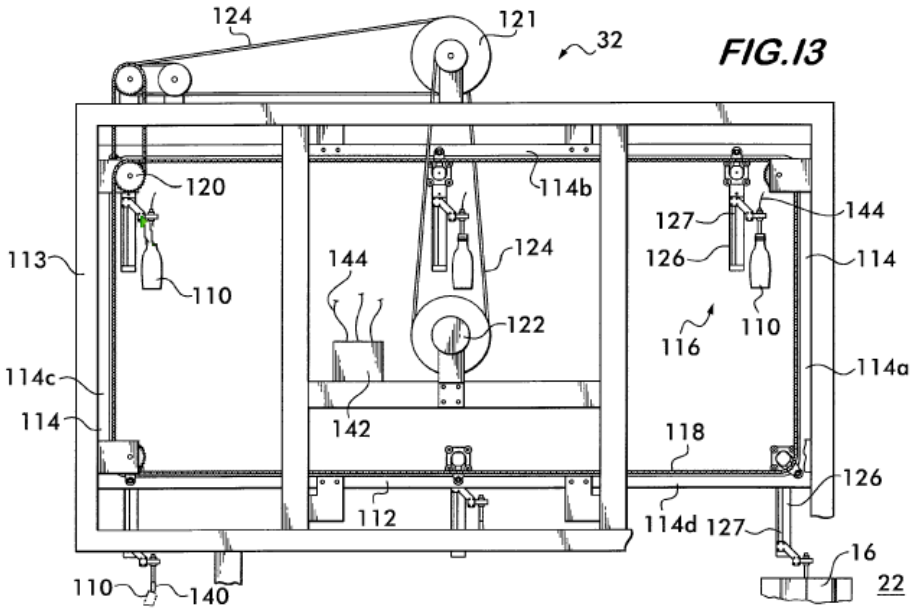

FIG.13

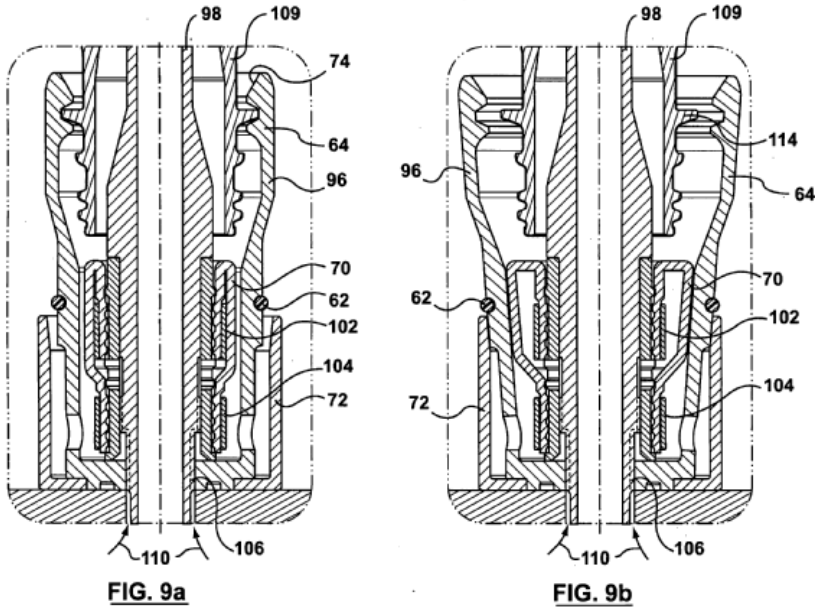

FIG. 9a FIG. 9b

B29C 49/42085

{holding inside the neck}

Definition statement

This place covers:

Illustrative example of subject matter classified in this group:

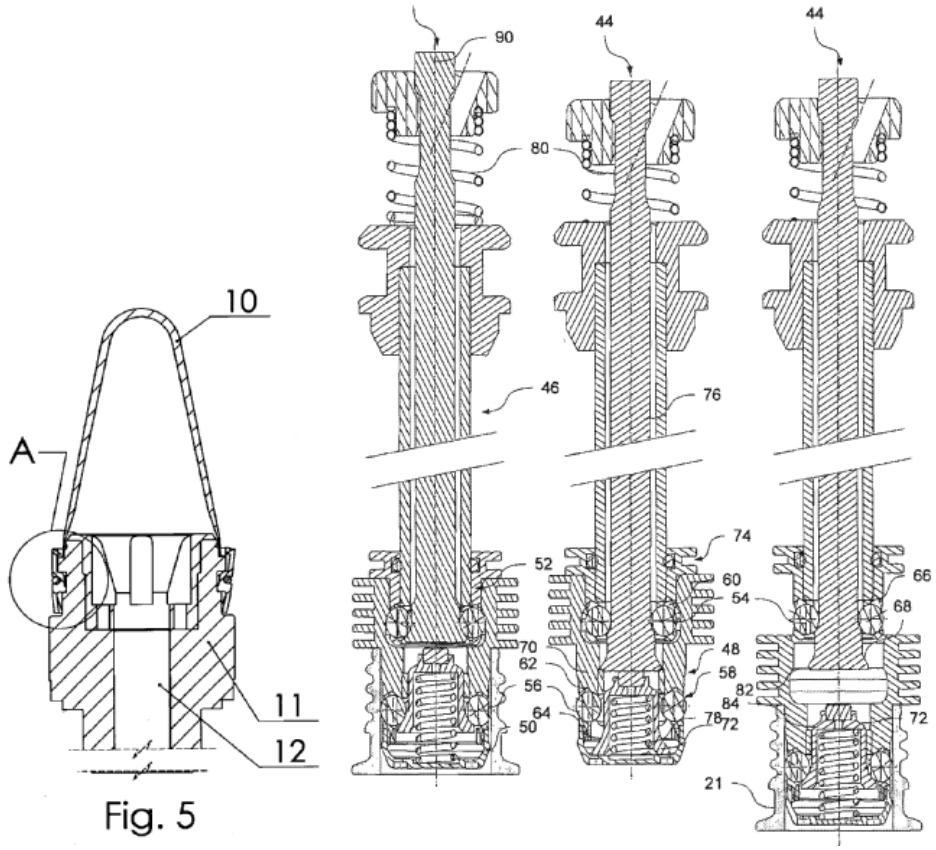

Fig. 5

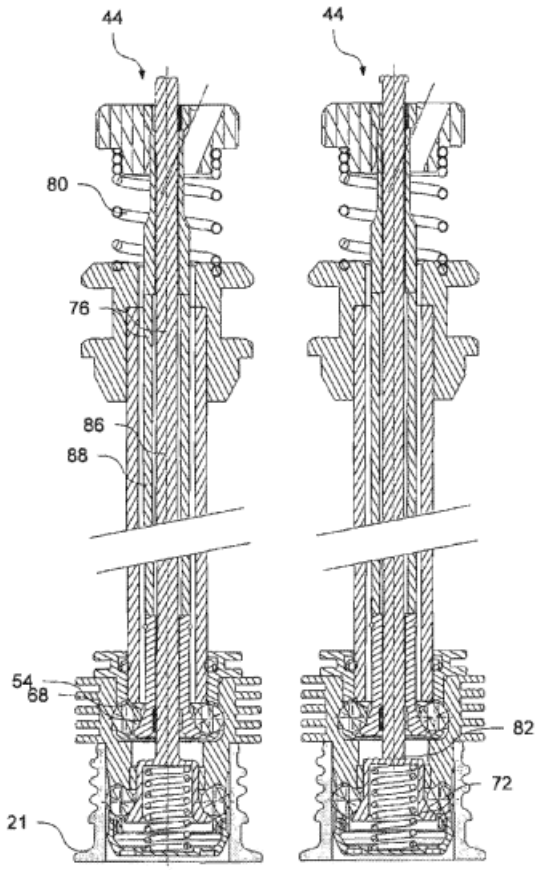
44
44
80
76
86
88
54
68
82
72
21

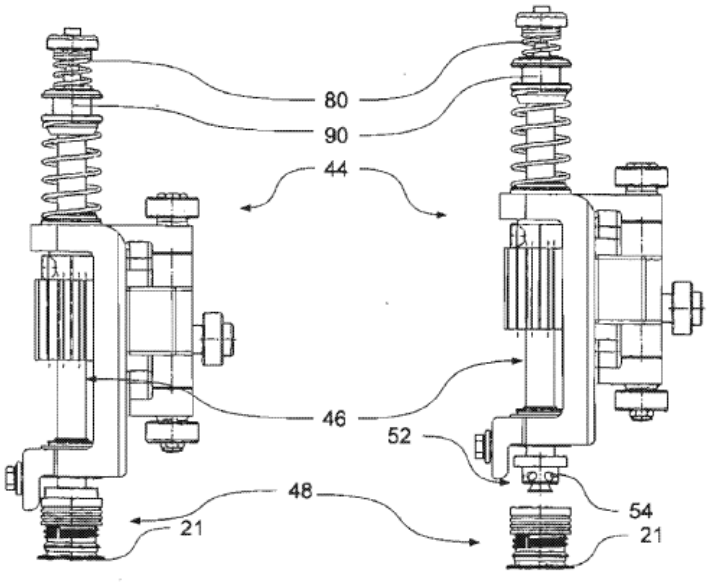
80
90
44
46
52
48
54
21
21

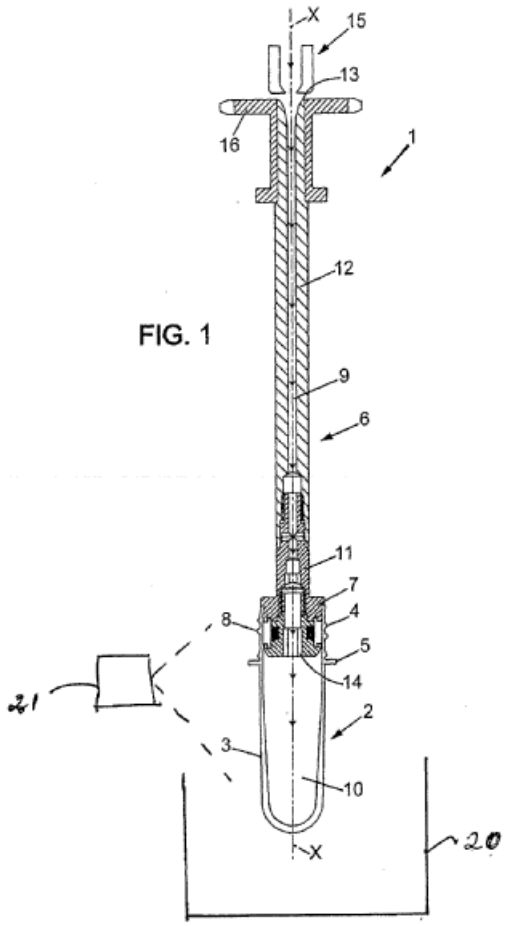

FIG. 1

B29C 49/42087

{holding outside the neck}

Definition statement

This place covers:

Illustrative example of subject matter classified in this group:

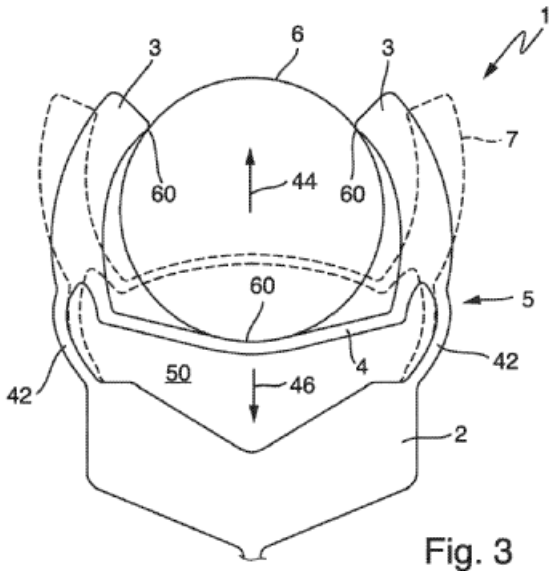

Fig. 3

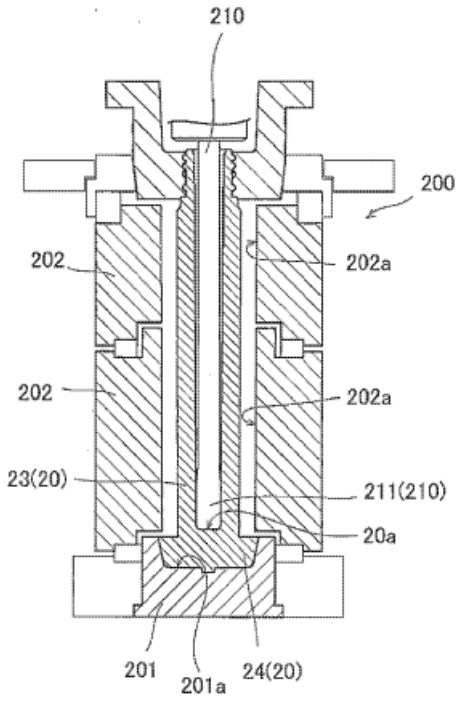
210
200
202
202a
202
202a
23(20)
211(210)
20a
201
201a
24(20)

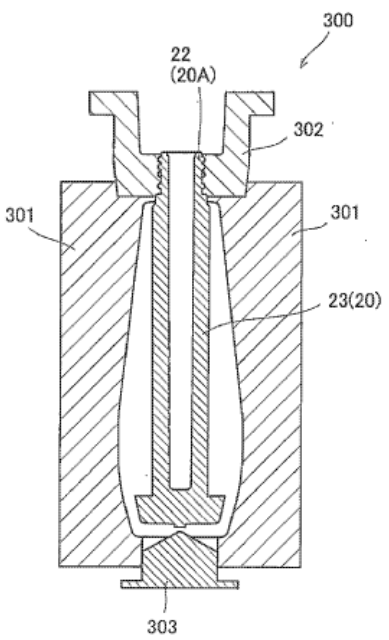
300
22
(20A)
302
301
301
23(20)
303

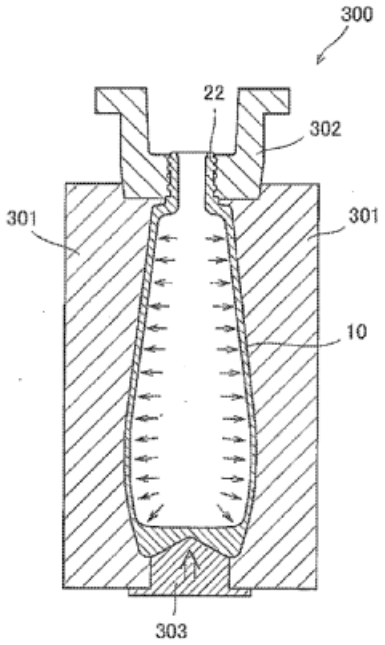
300
22
302
301
301
10
303

B29C 49/42089

{holding body portion}

Definition statement

This place covers:

Illustrative example of subject matter classified in this group:

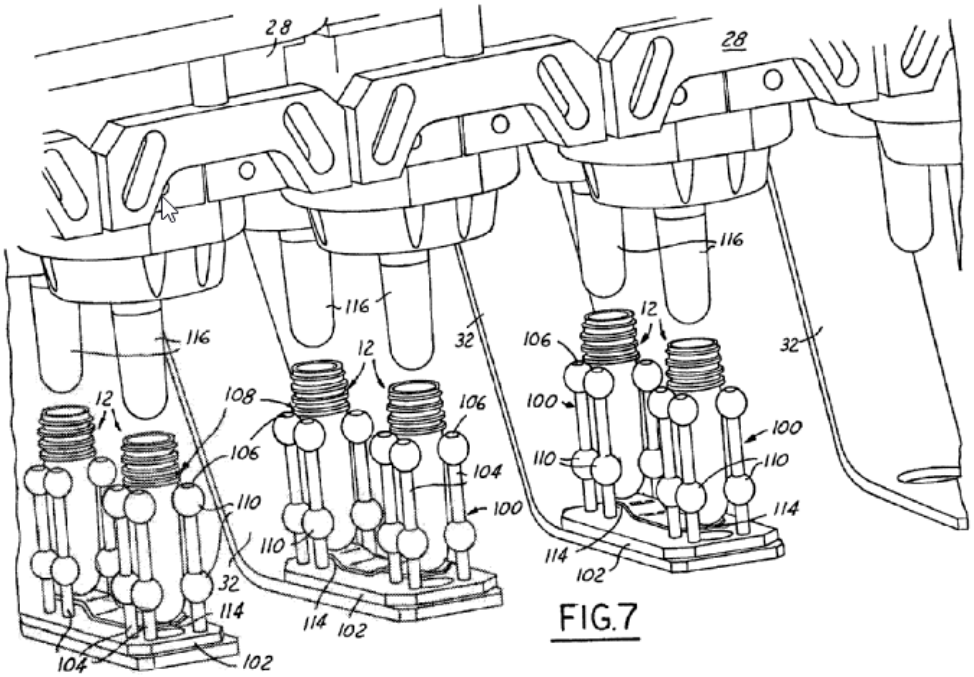

FIG.7

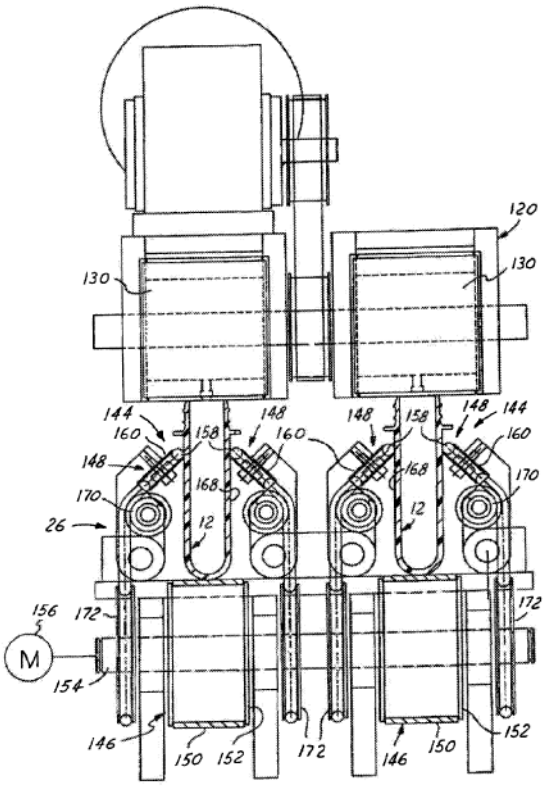

FIG.9

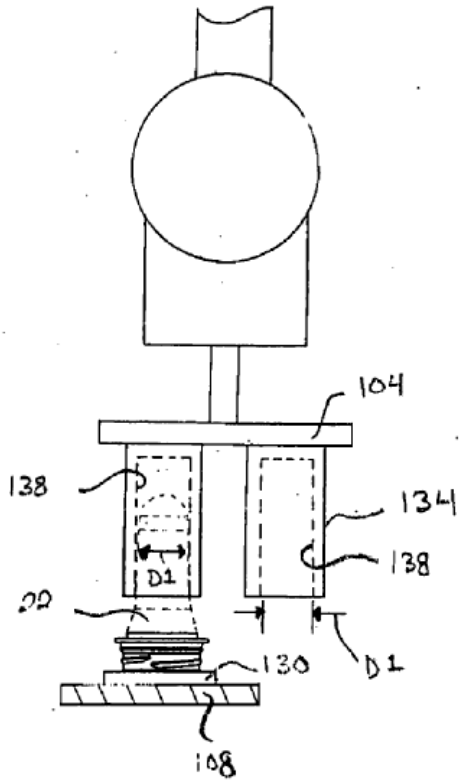

FIG. 4

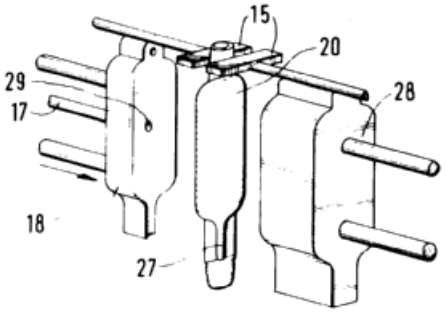

FIG. 3b

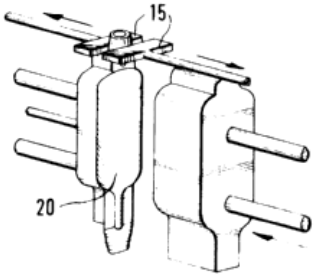

FIG. 3c

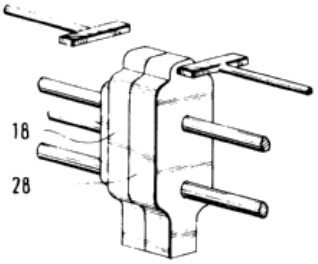

FIG. 3d

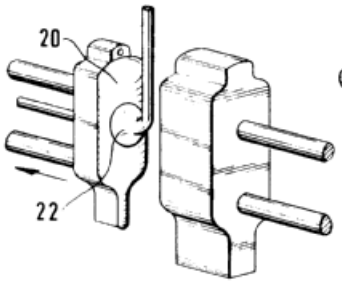

FIG. 3e

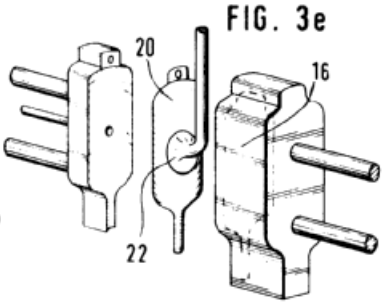

B29C 49/42091

{holding bottom portion or sprue}

Definition statement

This place covers:

Illustrative example of subject matter classified in this group:

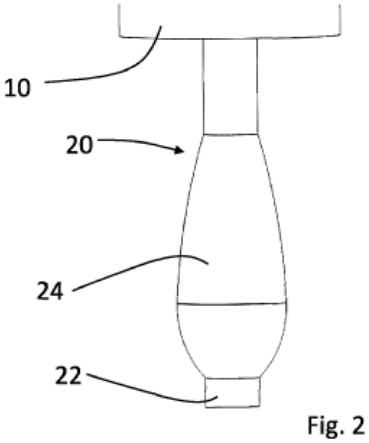

Fig. 2

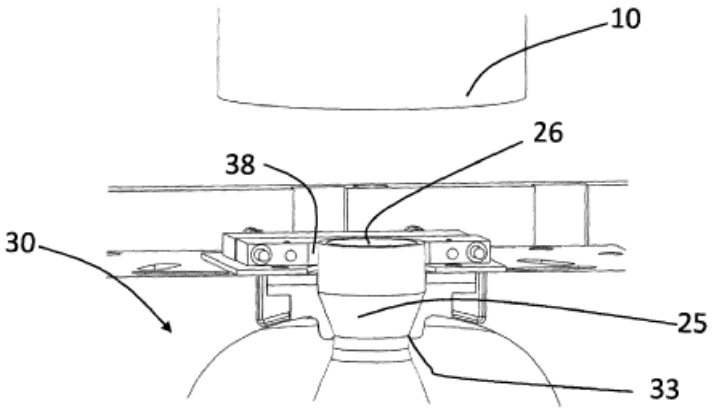

FIG. 5

FIG. 4

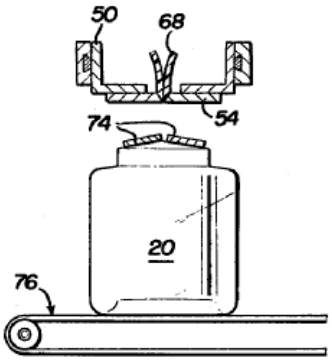

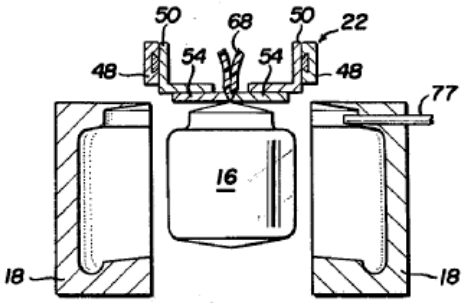

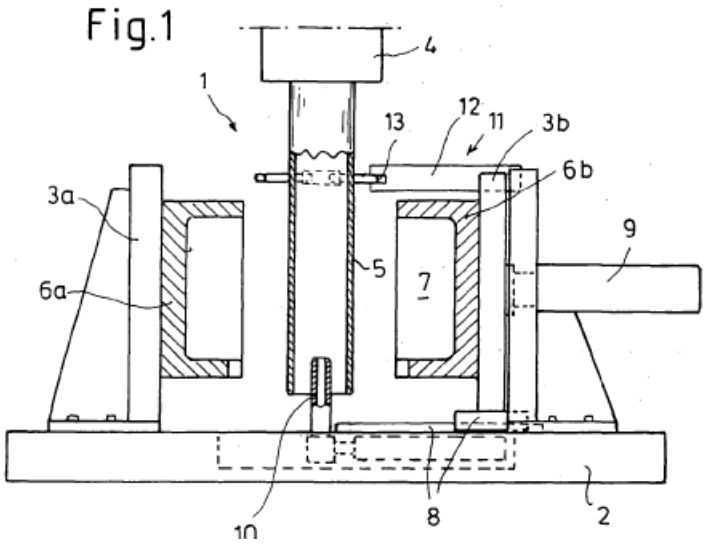

Fig.2

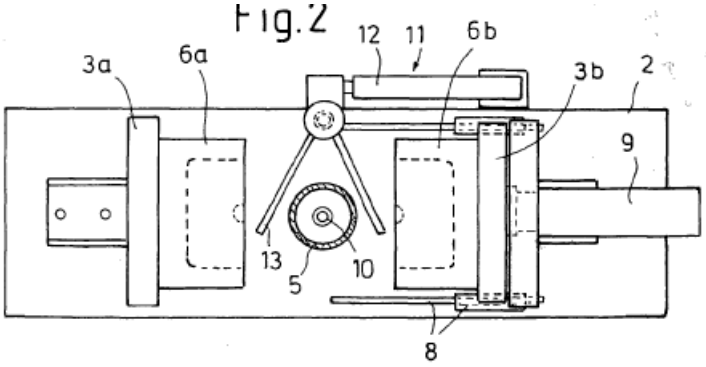

Fig.3

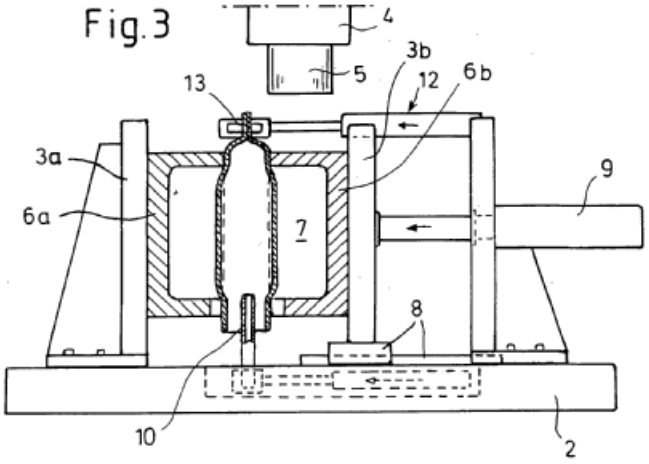

Fig.4

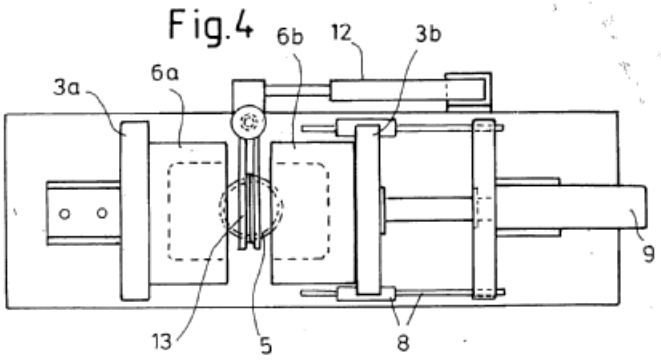

B29C 49/42095

{Rotating wheels or stars}

Definition statement

This place covers:

Illustrative example of subject matter classified in this group:

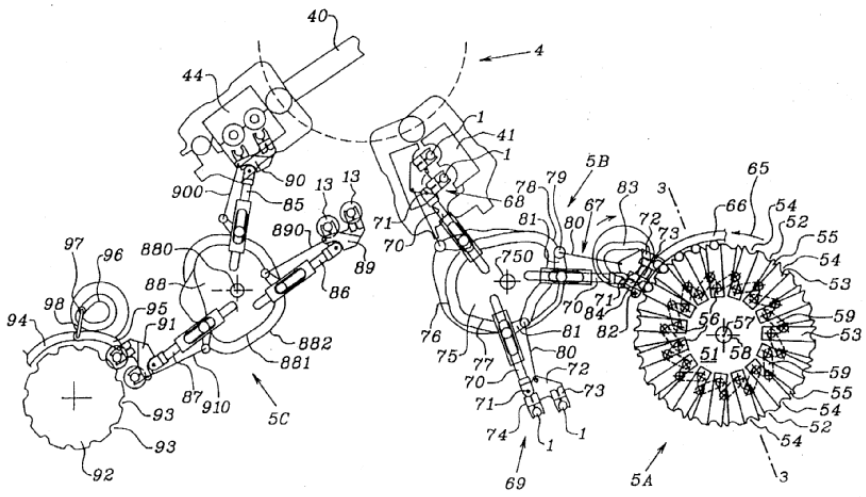

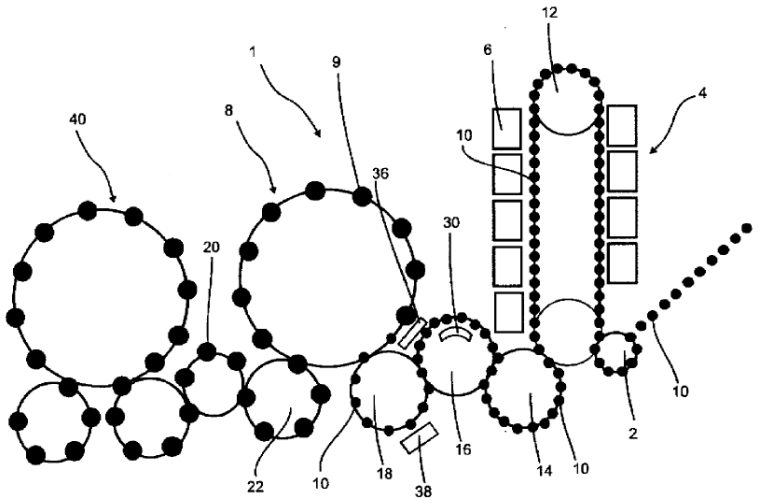

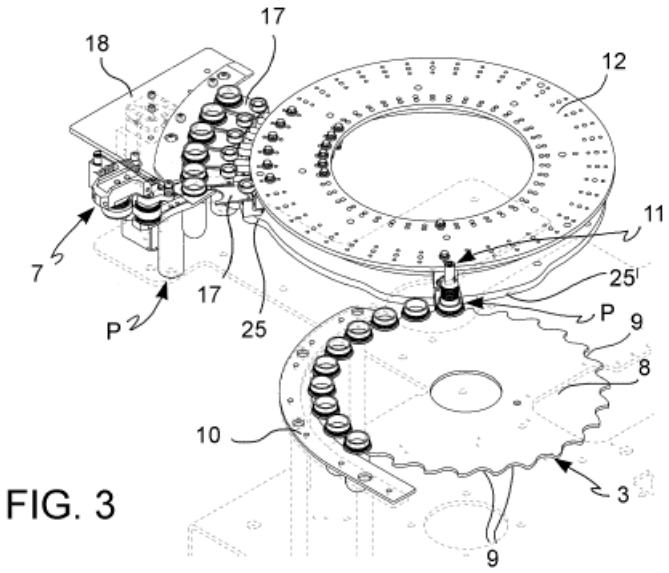

FIG. 3

B29C 49/42097

{Sliding rails, e.g. inclined}

Definition statement

This place covers:

Illustrative example of subject matter classified in this group:

Fig. 1

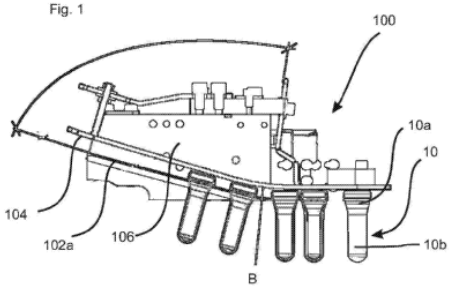

Fig. 2

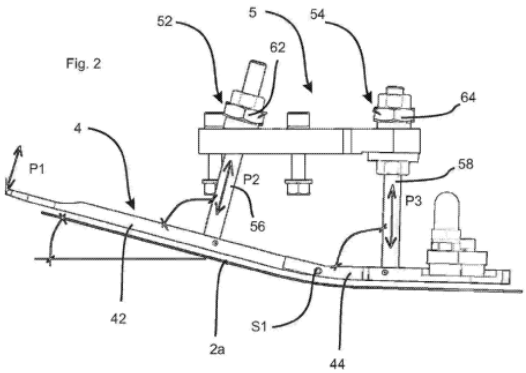

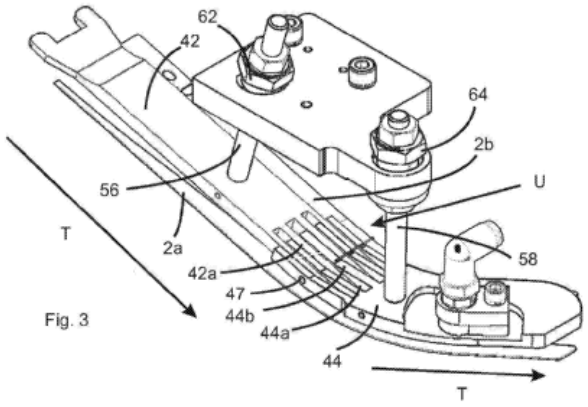

Fig. 3

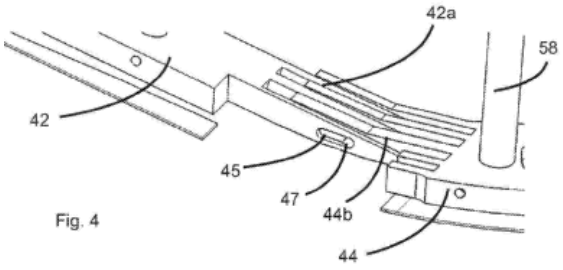

Fig. 4

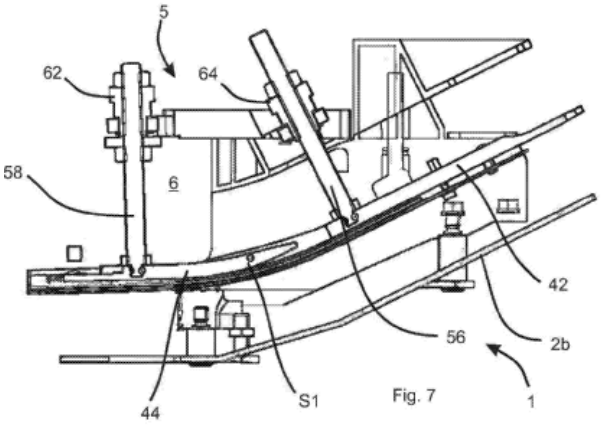

Fig. 7

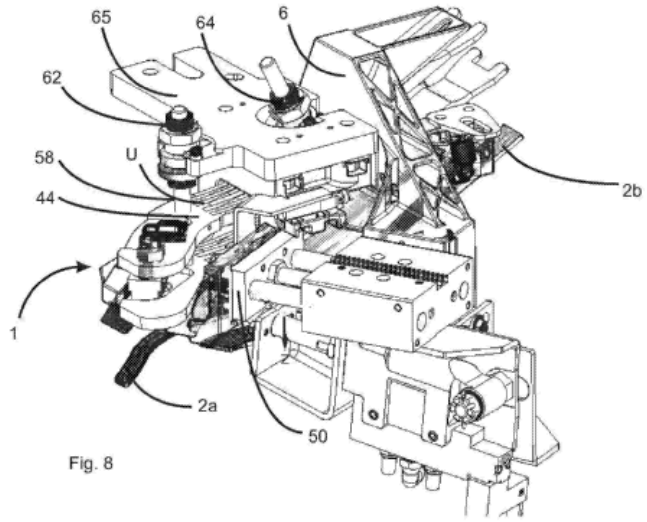

Fig. 8

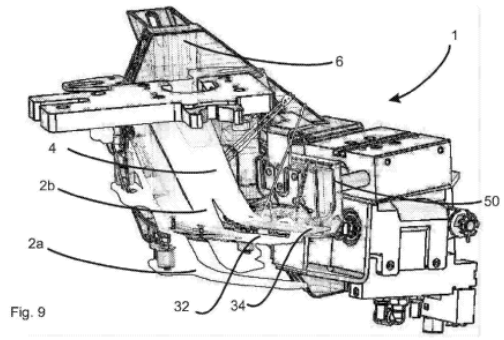

Fig. 9

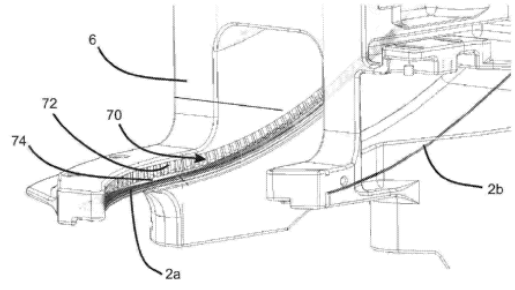

Fig. 10

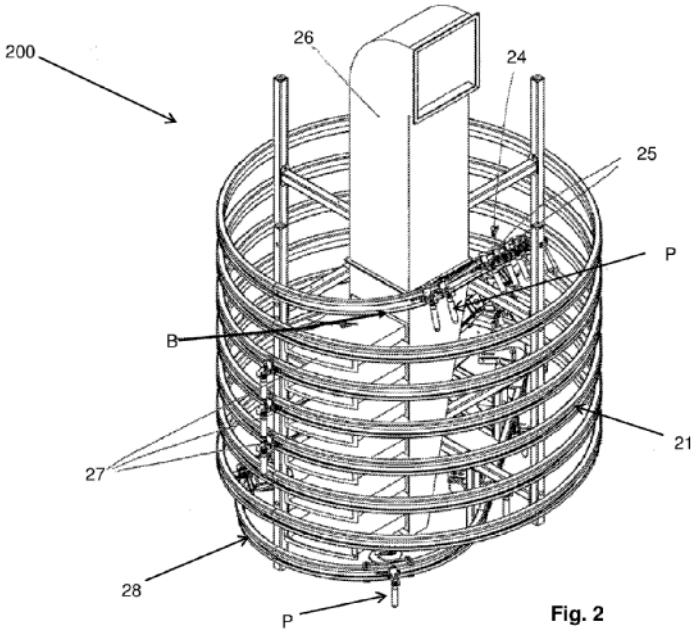

Fig. 2

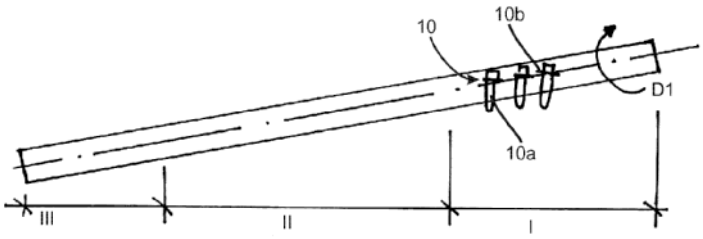

B29C 49/42099

{Pushing by air}

Definition statement

This place covers:

Where the movement along the sliding rail is caused by or aided by air or gas flow.

Illustrative example of subject matter classified in this group:

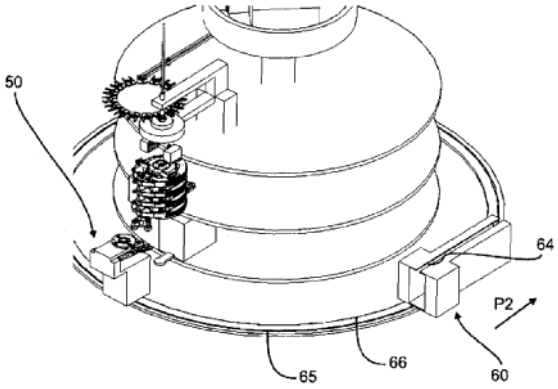

B29C 49/42101

{Conveyors, e.g. flat conveyor or clamping between two bands}

Definition statement

This place covers:

Illustrative example of subject matter classified in this group:

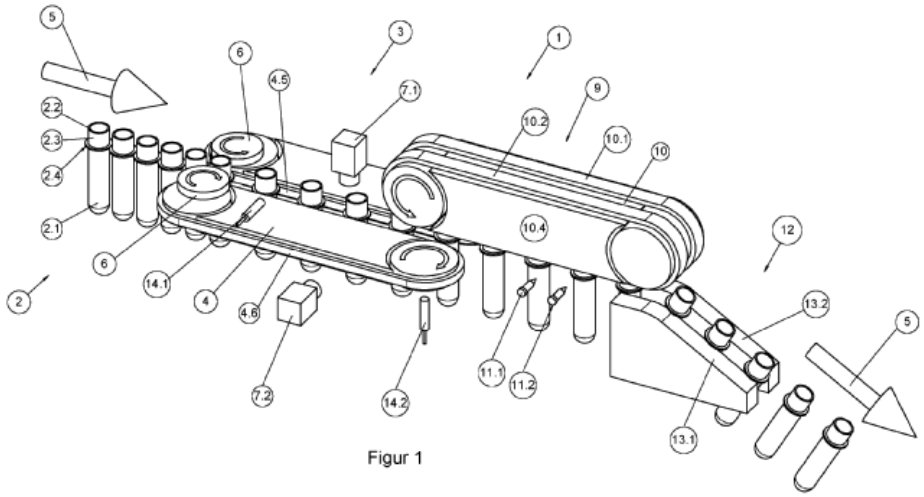

Figur 1

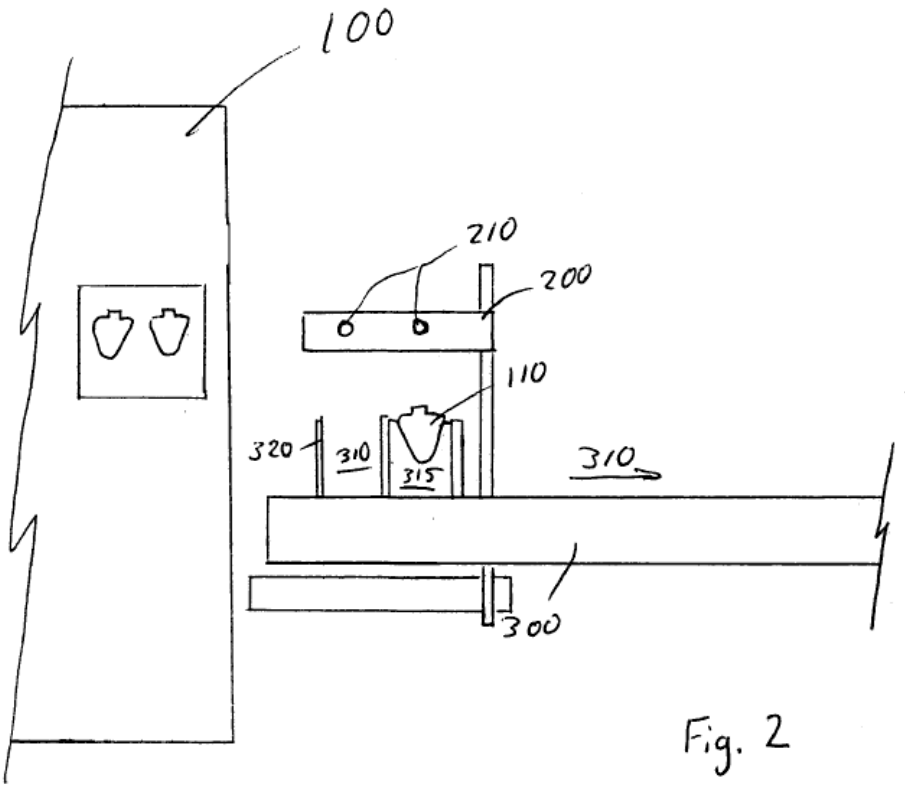

Fig. 2

B29C 49/42103

{Vacuum suction pipes}

Definition statement

This place covers:

Transportation means that uses vacuum or suction along a tube/pipe/conduit (e.g. a pneumatic tube).

Illustrative example of subject matter classified in this group:

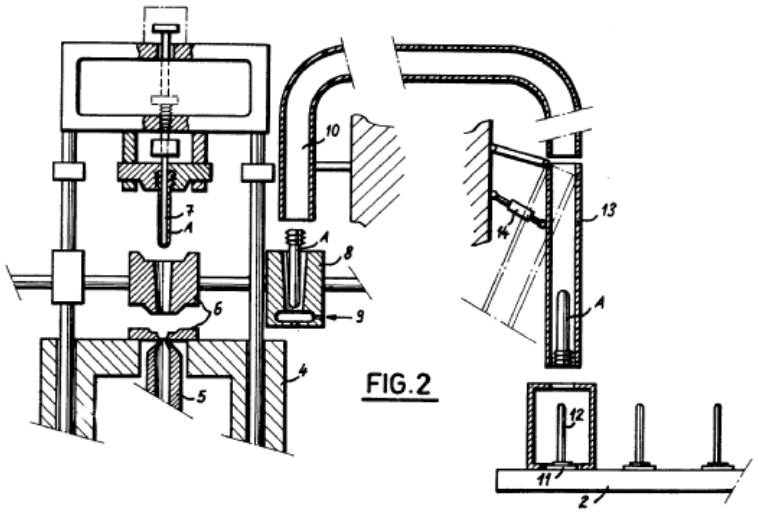

FIG.2

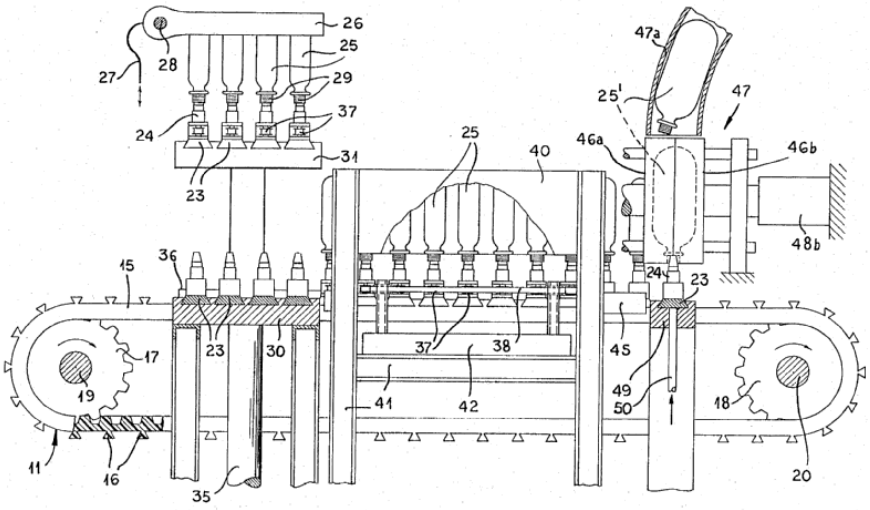

B29C 49/42105

{for discontinuous or batch transport}

Definition statement

This place covers:

Handling means for movement of a discrete number of preforms or blown articles.

Illustrative example of subject matter classified in this group:

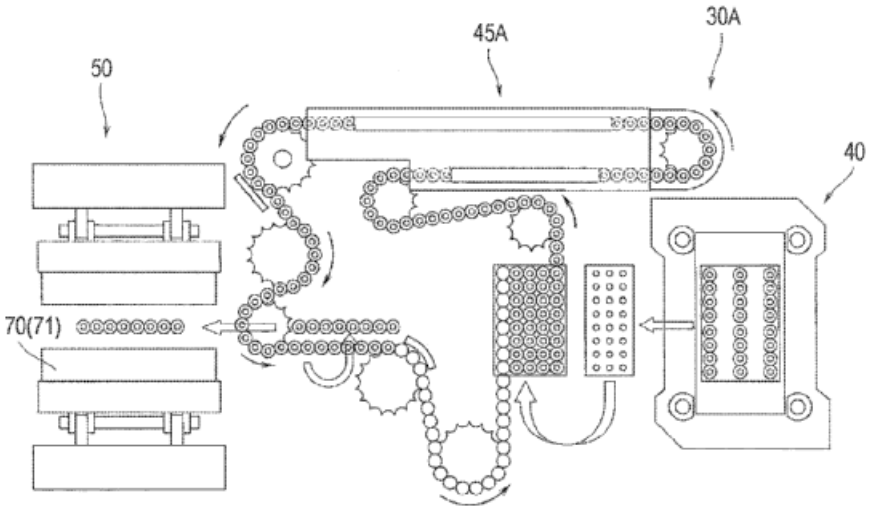

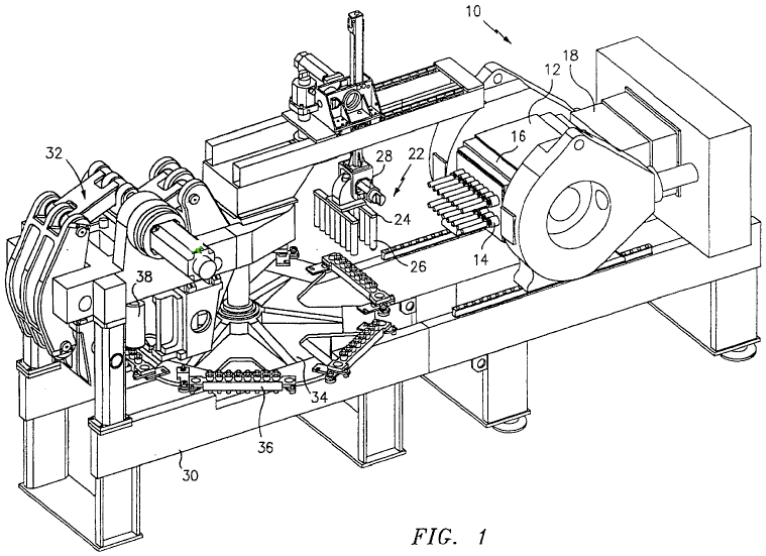

FIG. 1

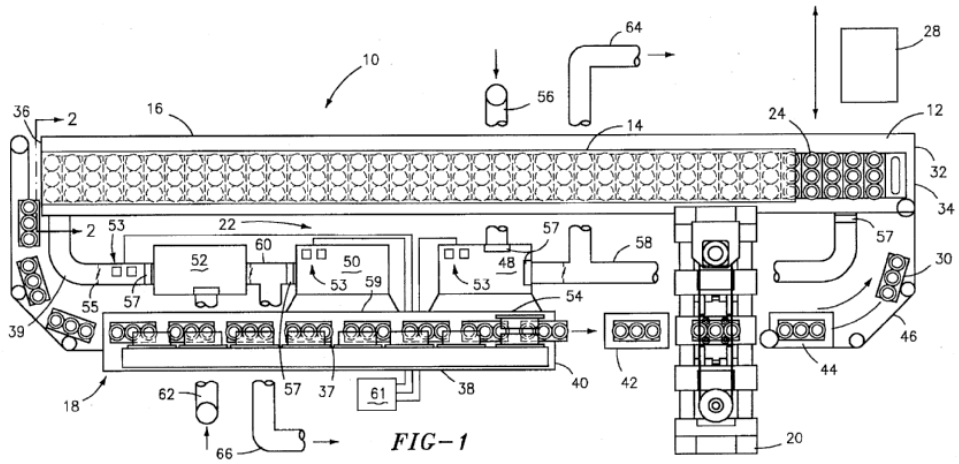

FIG–1

B29C 49/42107

{with accumulator or temporary storage, e.g. while waiting for the blowing apparatus}

Definition statement

This place covers:

Illustrative example of subject matter classified in this group:

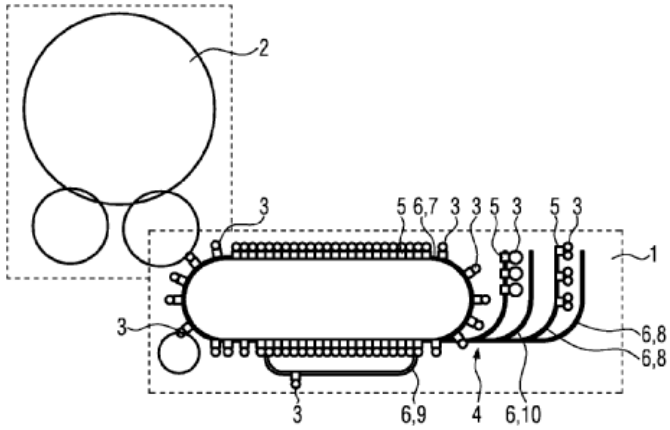

B29C 49/42111

{with changeable transporting paths or lengths}

Definition statement

This place covers:

Illustrative example of subject matter classified in this group:

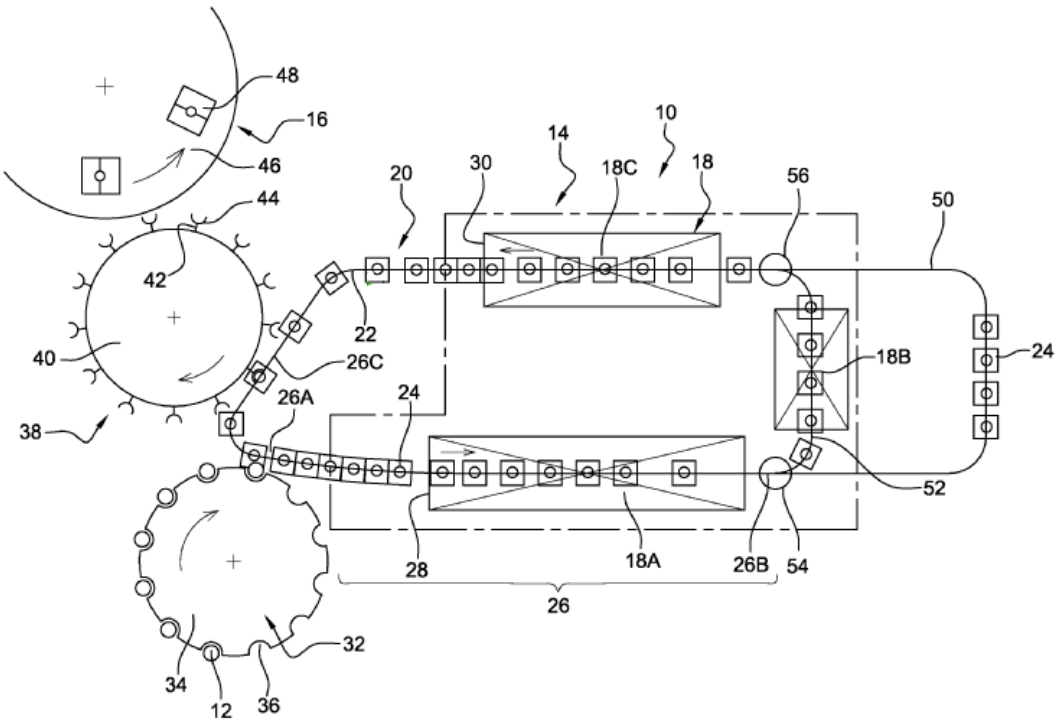

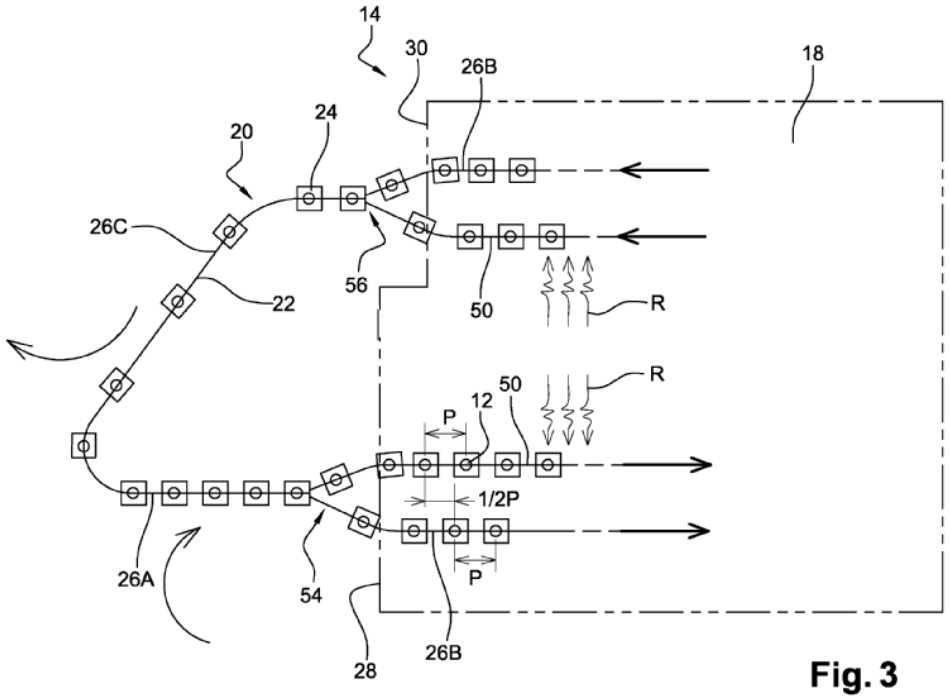

Fig. 3

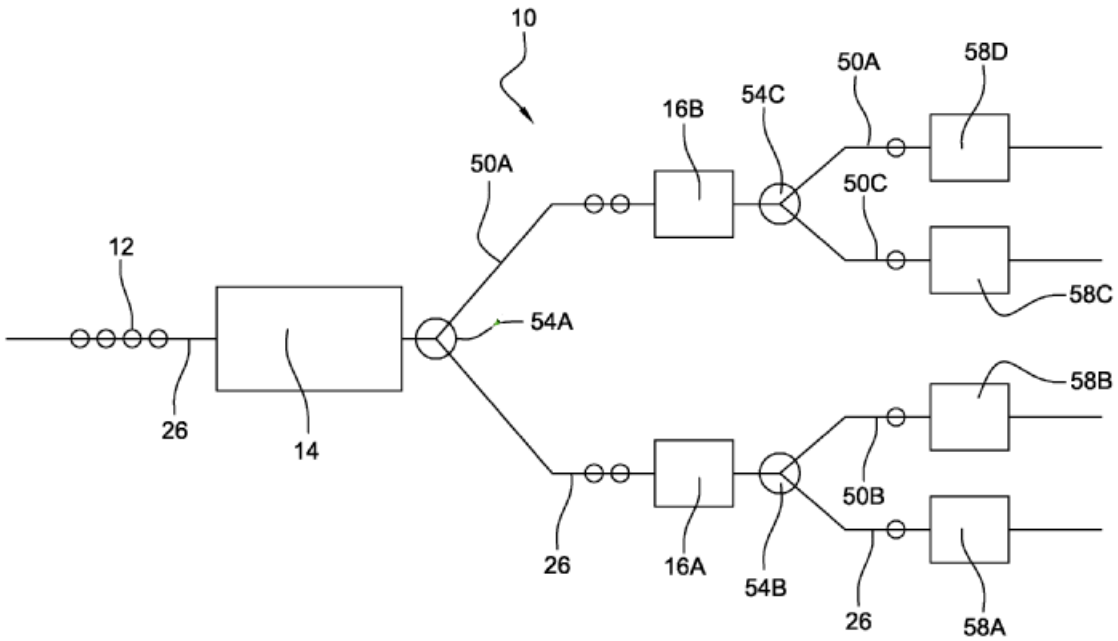

B29C 49/42115

{Inversion, e.g. turning preform upside down}

Definition statement

This place covers:

Handling means which invert the preform or article so that the top faces down or the bottom faces up.

Illustrative example of subject matter classified in this group:

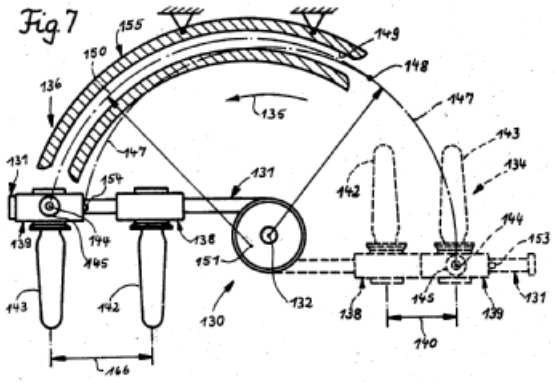

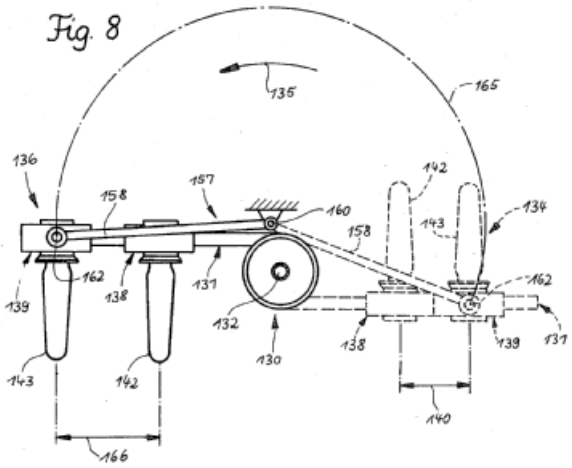

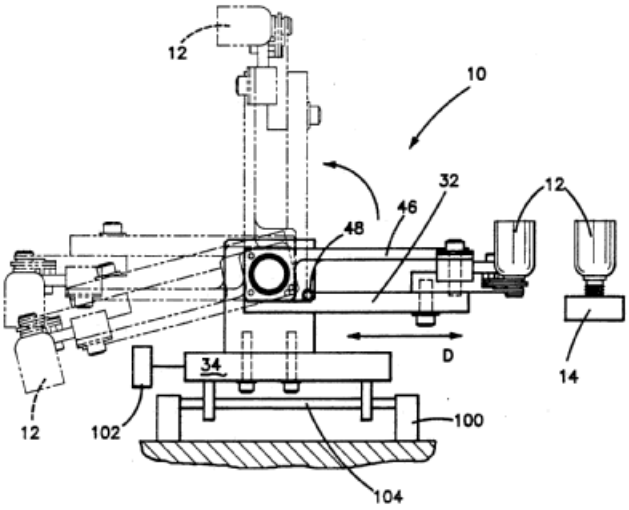

FIG-5

FIG.6.

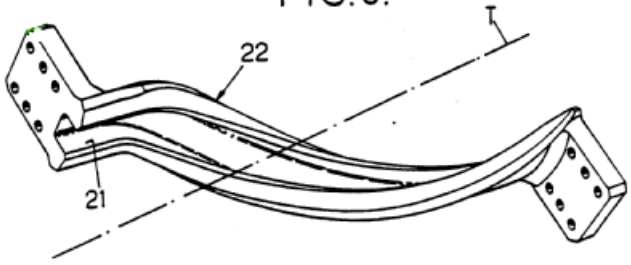

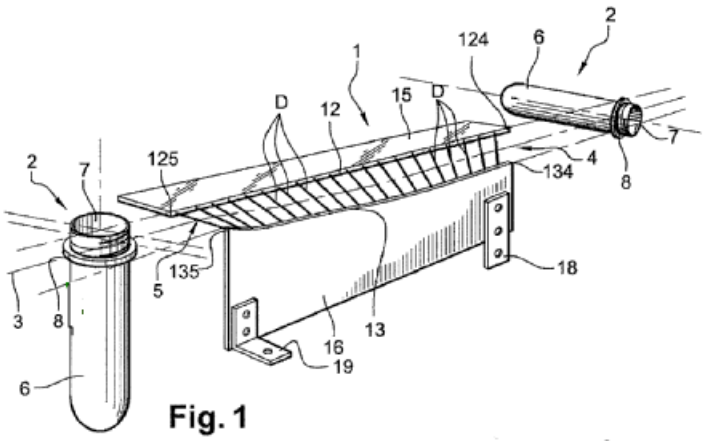

Fig. 1

B29C 49/42117

{Translation e.g. telescopic movement to pick up a preform}

Definition statement

This place covers:

Handling means which include a structure which moves, translates, or telescopes in order to reach a preform or blown article.

Illustrative example of subject matter classified in this group:

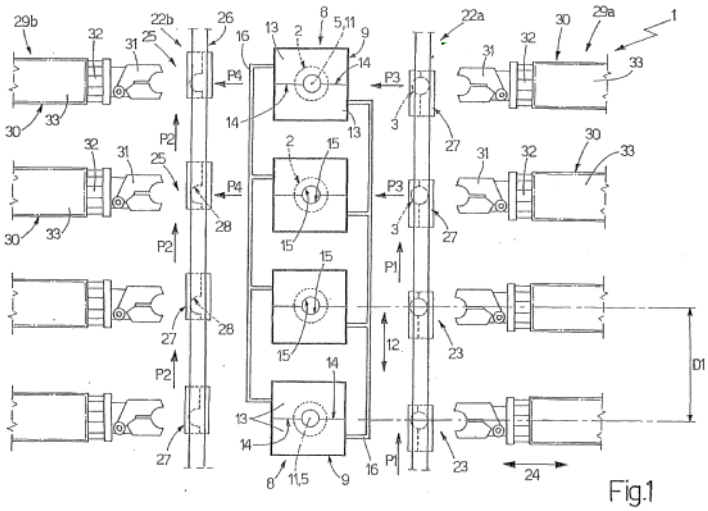

Fig.1

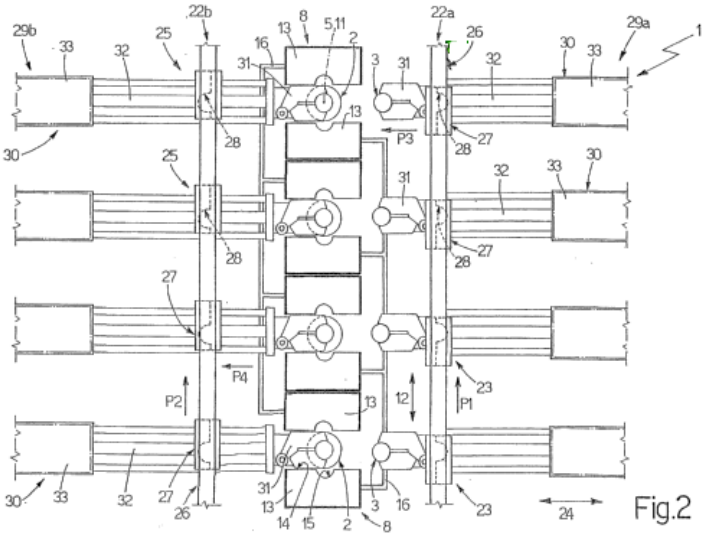

Fig.2

FIG. 3

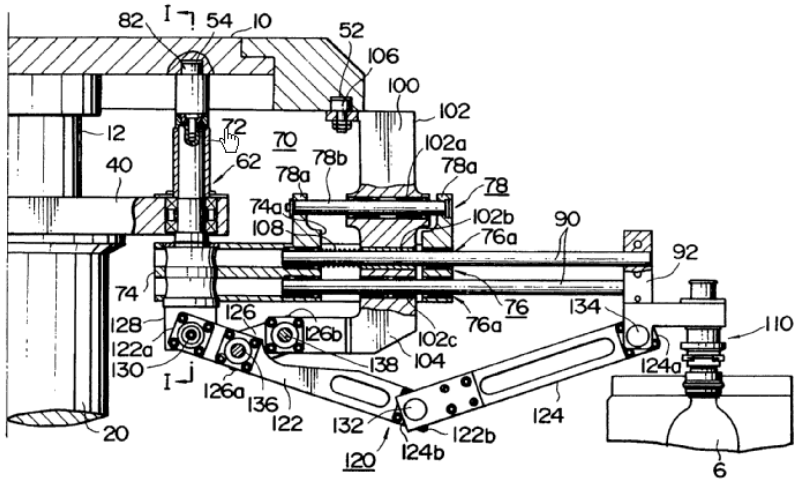

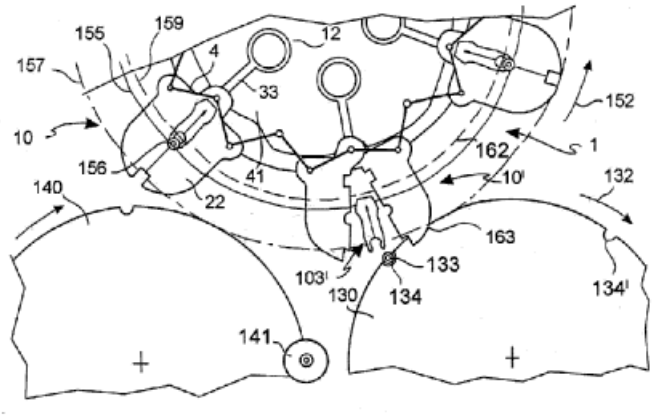

B29C 49/42121

{Changing the center-center distance}

Definition statement

This place covers:

Handling means that alters the spacing between preforms or blown articles during transportation.

Illustrative example of subject matter classified in this group:

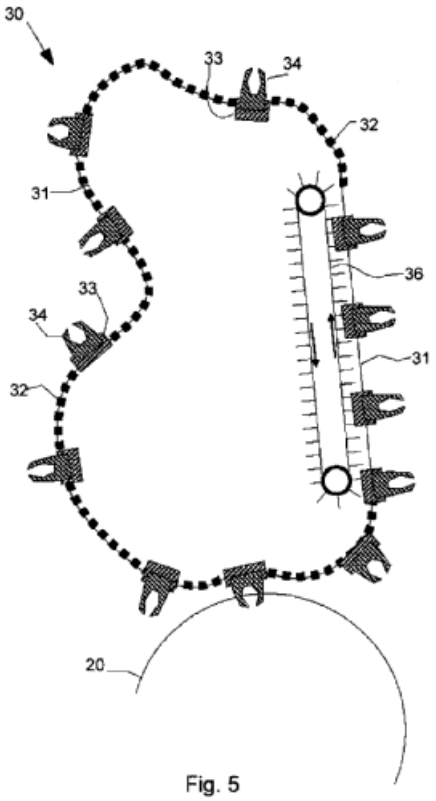

Fig. 5

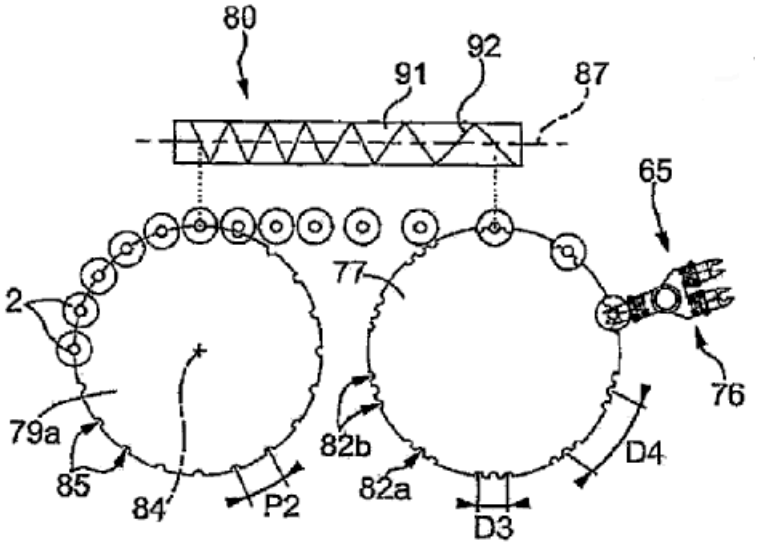

B29C 49/42122

{Adapting to blow-mould cavity center-center distance}

Definition statement

This place covers:

Where mould cavity spacing is different than the spacing of the preforms during transportation to the mould.

Illustrative example of subject matter classified in this group:

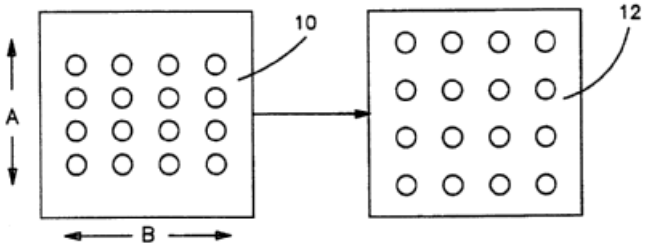

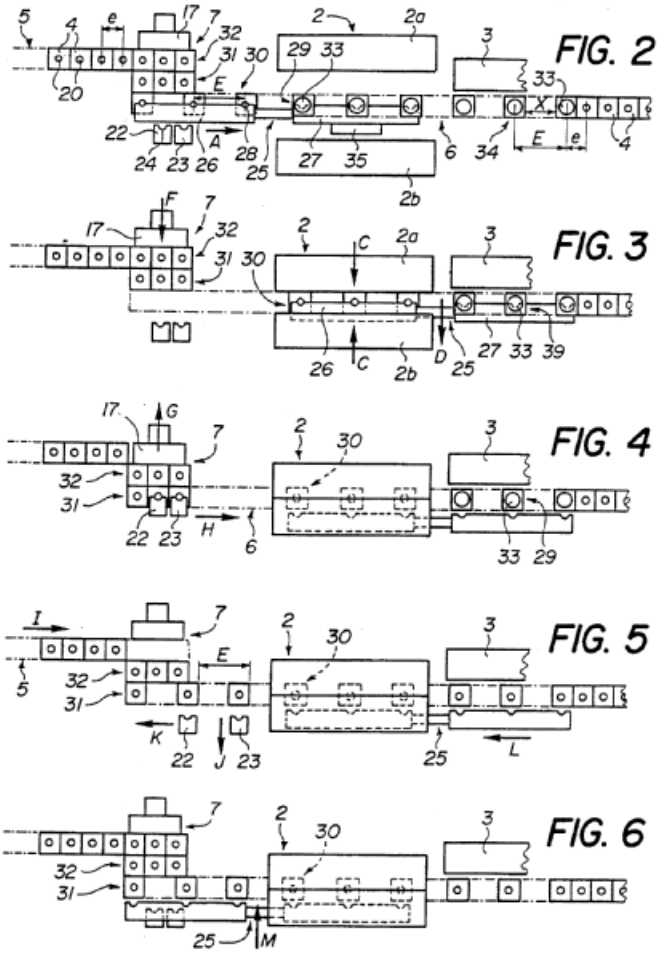

B29C 49/42155

{Keeping center-center distance constant}

Definition statement

This place covers:

Handling means which maintains a constant spacing between preforms or blown articles during transportation.

Illustrative example of subject matter classified in this group:

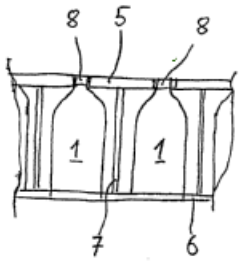

Fig.3

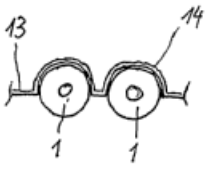

Fig.5

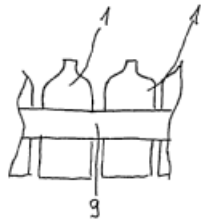

Fig.4.1

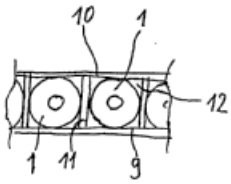

Fig.4.2

B29C 49/42362

{Electric drive means, e.g. servomotors}

Definition statement

This place covers:

Illustrative example of subject matter classified in this group:

Where the drive mechanism relies on electrical signals in order to provide movement (i.e. servomotor, linear actuator, etc.).

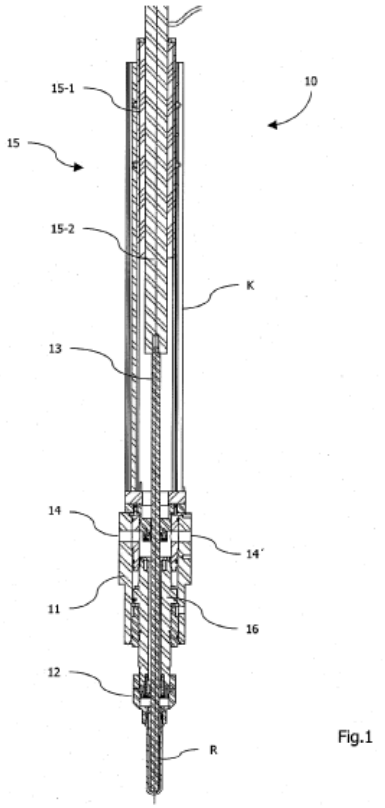

Fig.1

B29C 49/42374

{for the extruder, e.g. extruder moving up and down}

Definition statement

This place covers:

Apparatuses that alter the position of an extruder.

Illustrative example of subject matter classified in this group:

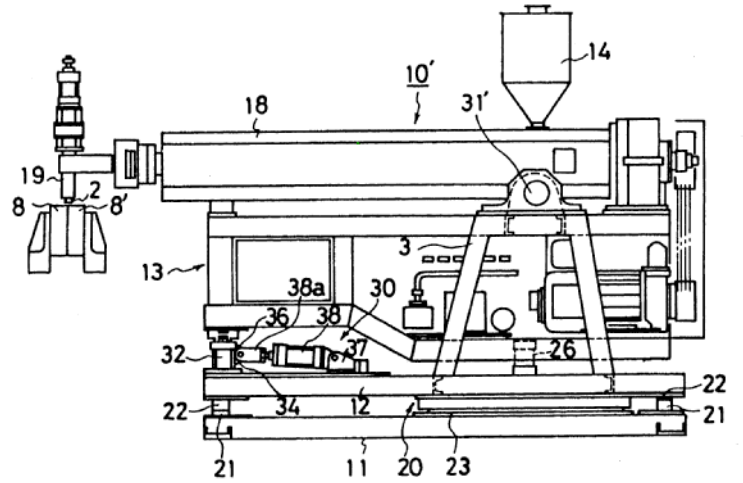

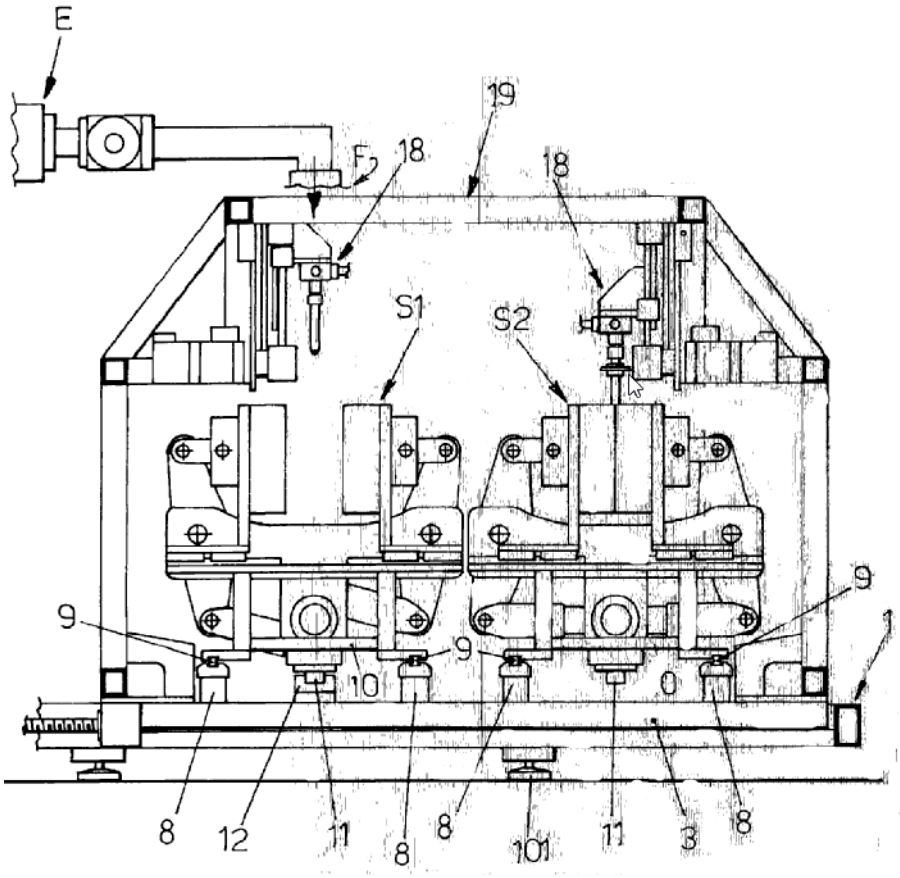

B29C 49/42376

{for moulds other than opening, closing and clamping}

Definition statement

This place covers:

Apparatuses that alter the position and/or location of a mould; not including opening, closing, or clamping the mould.

Illustrative example of subject matter classified in this group:

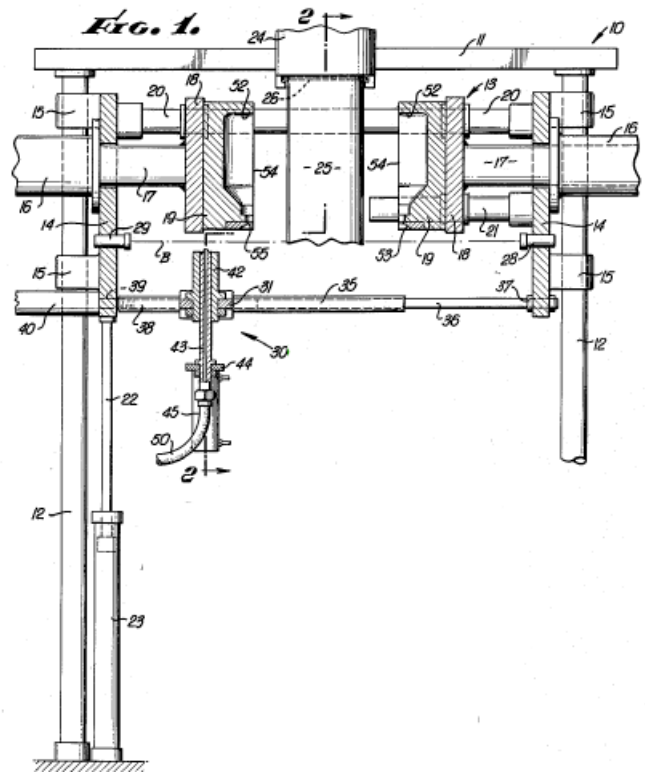

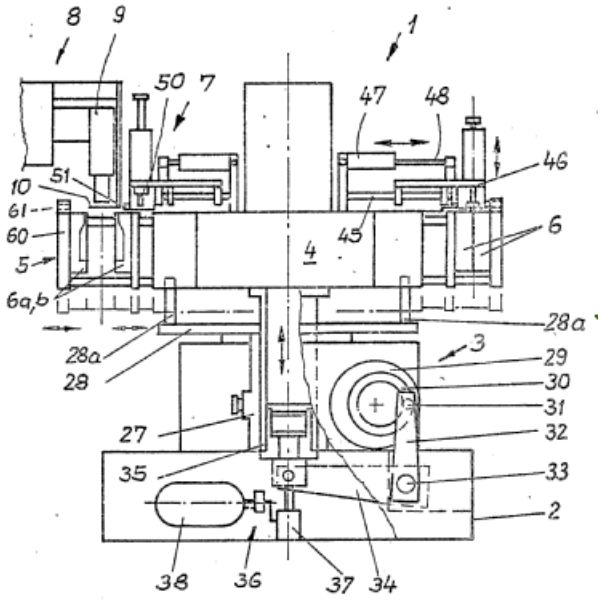

B29C 49/42384

{Safety, e.g. operator safety}

Definition statement

This place covers:

Safety devices preventing injuries while operating a blow-moulding apparatus.

B29C 49/42386

{Improving flash formation, e.g. providing for easily removable flash from extrusion moulded articles}

Definition statement

This place covers:

Illustrative example of subject matter classified in this group:

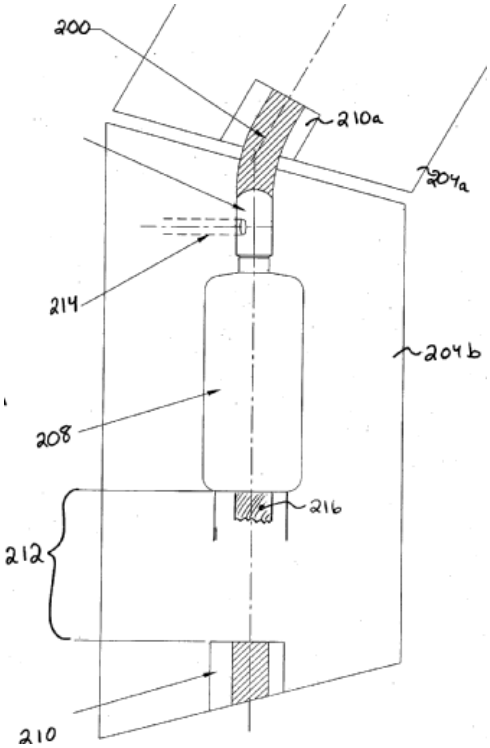

B29C 49/4239

{Avoiding condense, e.g. on cooled mould surfaces}

Definition statement

This place covers:

Methods and apparatuses that prevent or lessen the occurrence of condensation during blow-moulding.

Illustrative example of subject matter classified in this group:

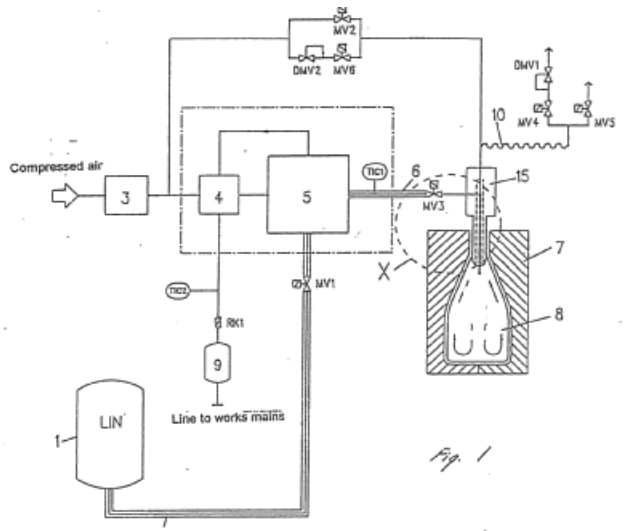

Fig. 1

B29C 49/42407

{Procedures for start-up or material change}

Definition statement

This place covers:

Illustrative example of subject matter classified in this group:

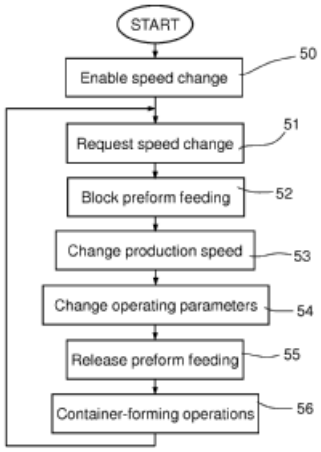

B29C 49/42409

{Special pressurization during start-up of the machine}

Definition statement

This place covers:

Illustrative example of subject matter classified in this group:

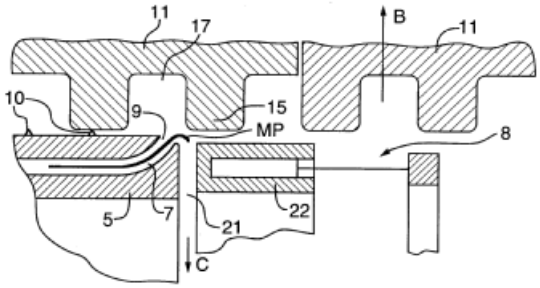

FIG.3

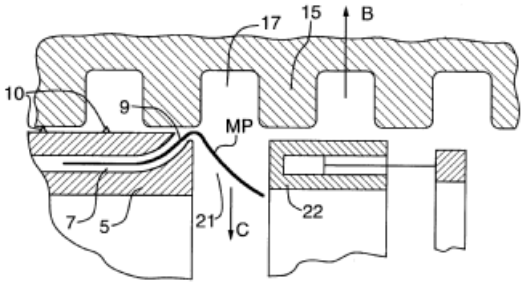

FIG.4

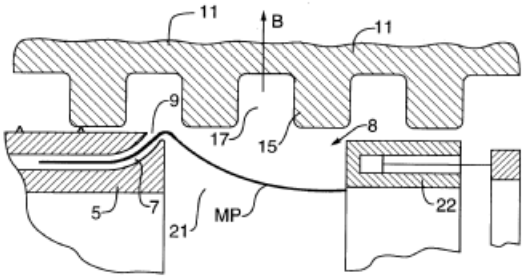

FIG.5

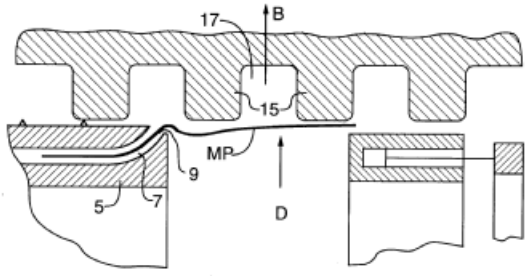

FIG.6

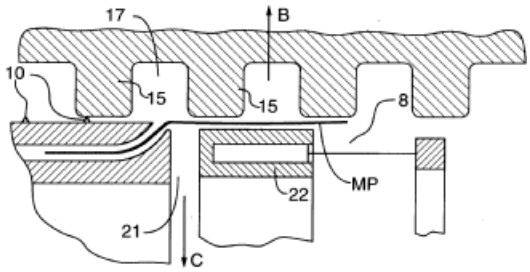

FIG.7

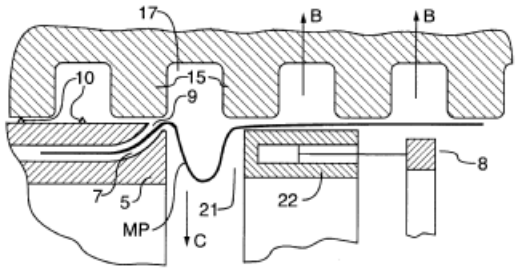

FIG.8

B29C 49/42412

{Marking or printing}

Definition statement

This place covers:

Methods or apparatuses for applying an indicia (e.g. pattern, marking, design, identifying feature, etc.).

Illustrative example of subject matter classified in this group:

A marking step can also be used to mark usual information on the filler product that is contained in the container, such as, for example, an expiration date or the like. Thus, a single marking step makes it possible to print information relative to the traceability of the container and relative to the product that is contained in the container.



FIG.4a



FIG.4b

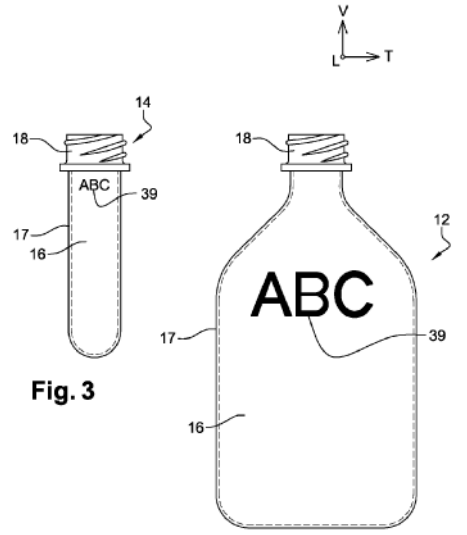

Fig. 3

Fig. 4

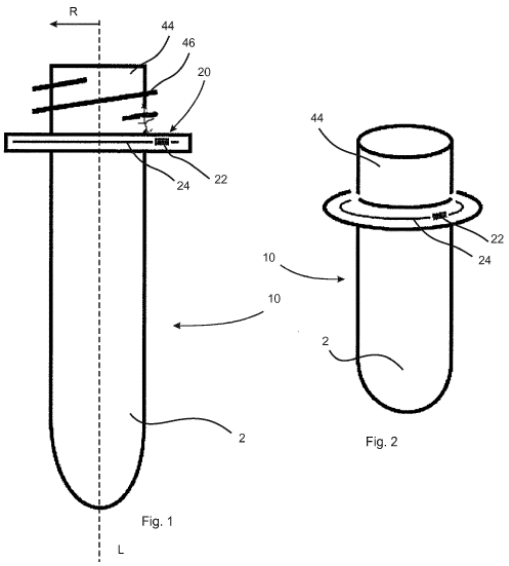

Fig. 1

Fig. 2

B29C 49/42413

{with a pattern for analysing deformation}

Definition statement

This place covers:

Where the applied indicia can be used to measure or indicate the deformation that a preform undergoes during processing.

Illustrative example of subject matter classified in this group:

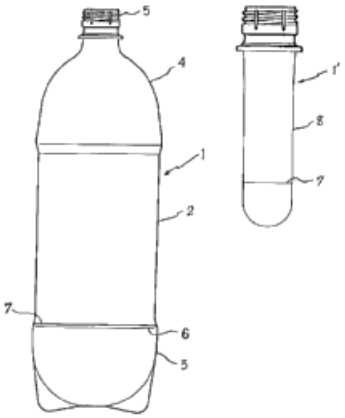

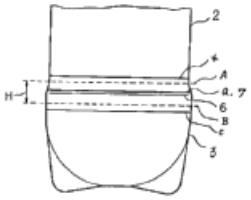

B29C 49/42416

{Purging or cleaning the preforms}

Definition statement

This place covers:

Illustrative example of subject matter classified in this group:

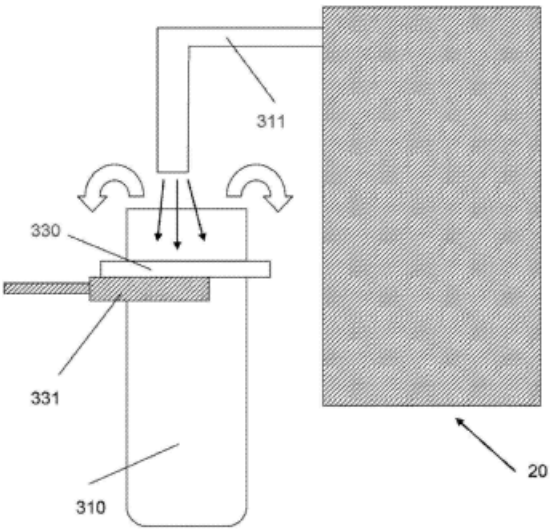

B29C 49/4242

{Means for deforming the parison prior to the blowing operation (B29C 49/08 takes precedence)}

Definition statement

This place covers:

Pulling the extruded parison through the mould.

Moving the mould or the extruder head while extruding the parison.

A floating for helping feeding of the parison through the mould.

Using grippers which deform the parison during extrusion or during transportation.

Illustrative example of subject matter classified in this group:

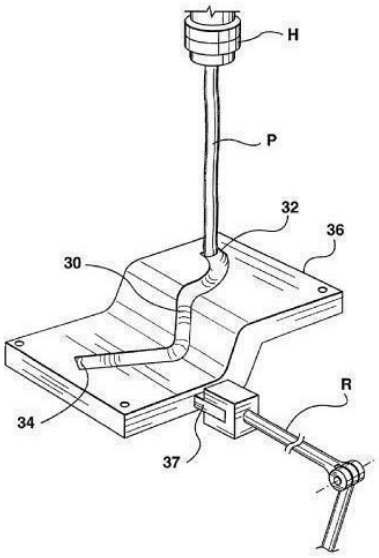

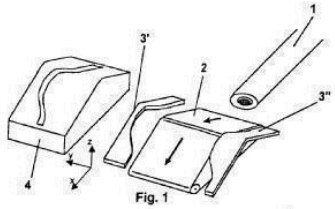
1
3'
2
3"
4
Fig. 1

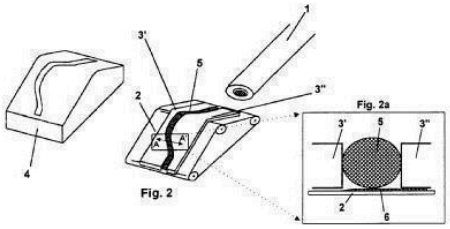
1
3'
5
2
3"
Fig. 2a
4
Fig. 2
3'
5
3"
2
6

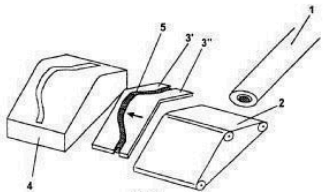
5
3'
3"
1
2
4

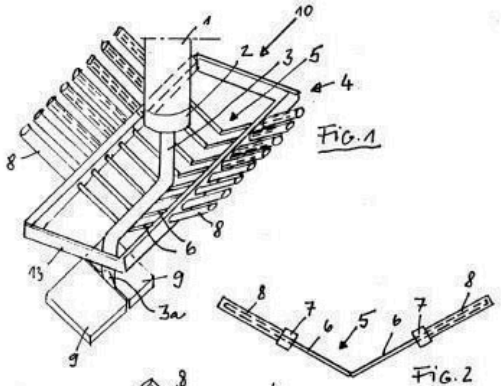
10
1
2
3
5
4
8
6
8
13
9
3a
9
Fig.1
8
7
6
5
6
7
8
Fig.2

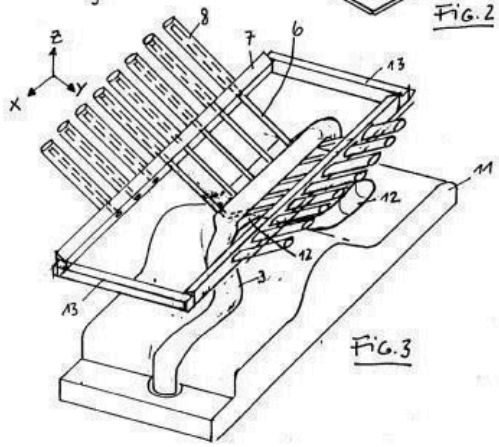
Z
X
Y
8
7
6
13
11
12
12
3
13
Fig.3

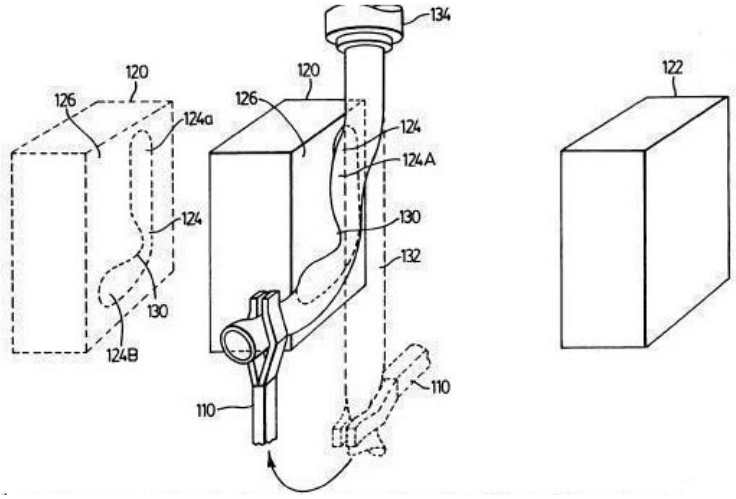

Fig.2 Fig.3 Fig.5

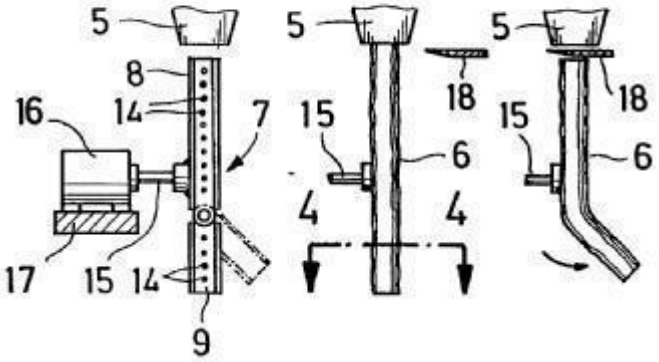

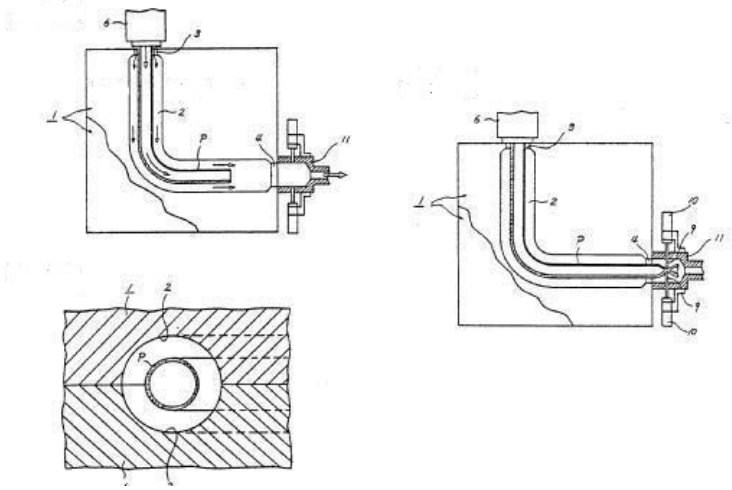

References

Limiting references

This place does not cover:

Biaxial stretching during blow-moulding	B29C 49/08

Informative references

Attention is drawn to the following places, which may be of interest for search:

Bending of tubes	B29C 53/083

B29C 49/42421

{before laying into the mould}

Definition statement

This place covers:

Illustrative example of subject matter classified in this group:

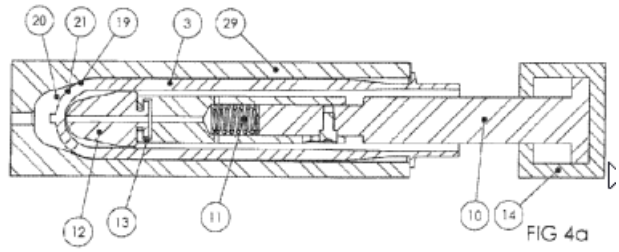

FIG 4a

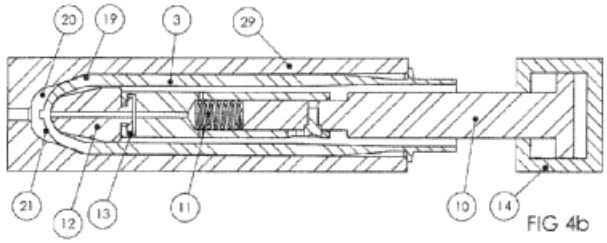

FIG 4b

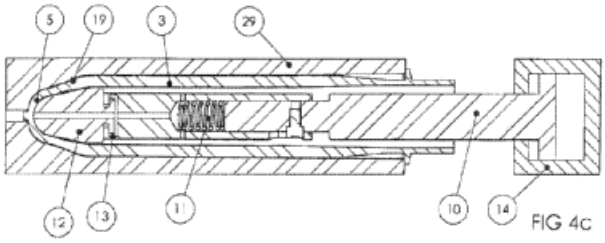

FIG 4c

FIG. 7

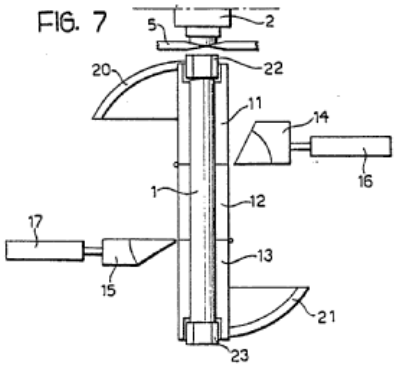

FIG. 8

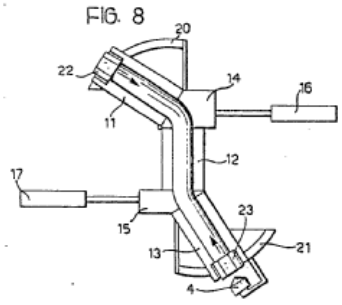

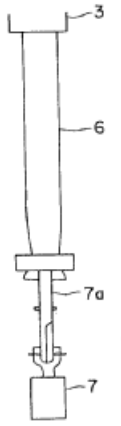

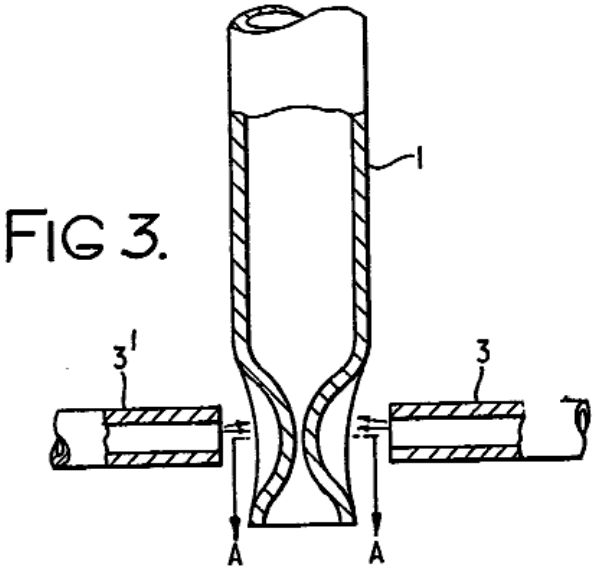

FIG 3.

B29C 49/42422

{by the preform transporting means}

Definition statement

This place covers:

Illustrative example of subject matter classified in this group:

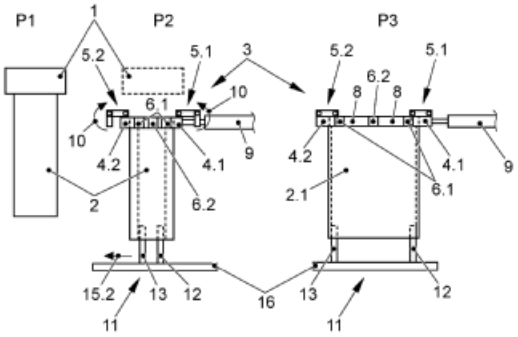

FIG. 1a

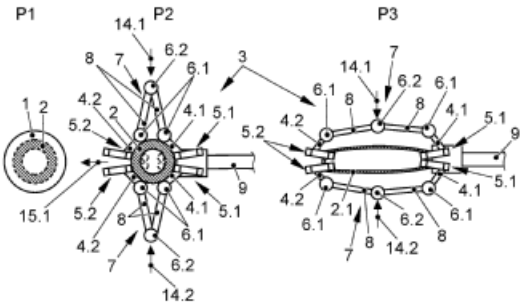

FIG. 1b

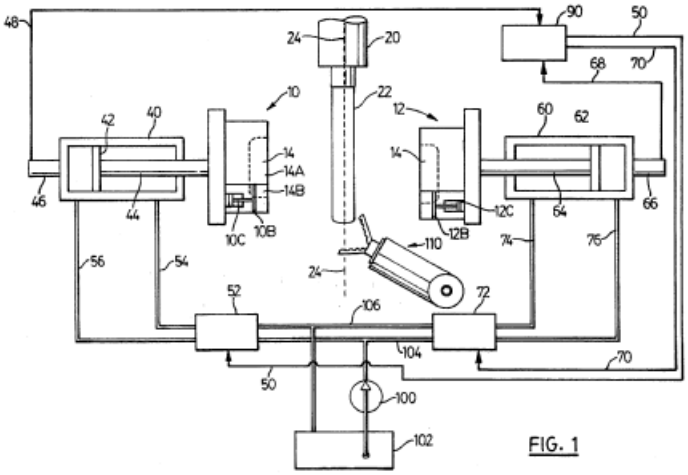

FIG. 1

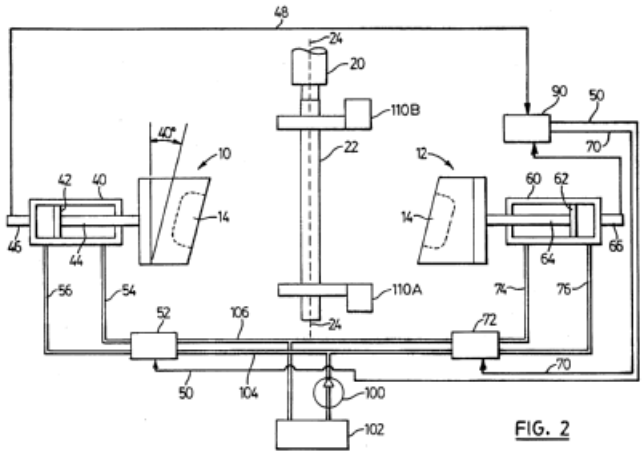
48
24
20
110B
22
90
50
70
40°
10
12
42
40
14
60
62
14
46
44
64
66
56
54
110A
74
76
52
106
24
72
70
50
104
100
102

FIG. 2

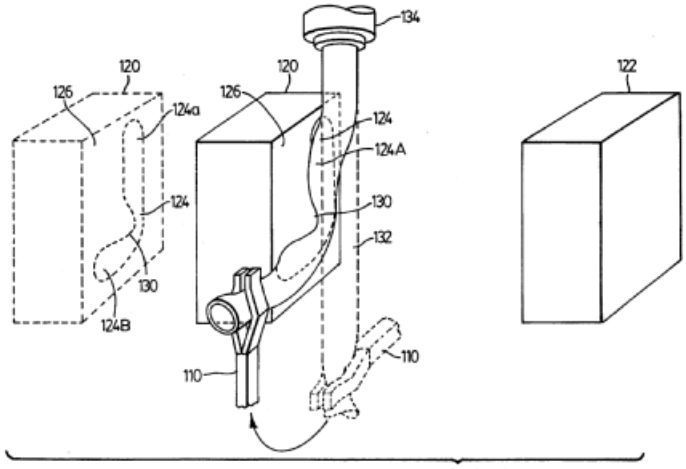
134
120
126
124a
120
126
124
124A
122
124
130
132
130
124B
110
110

FIG. 3

FIG. 1

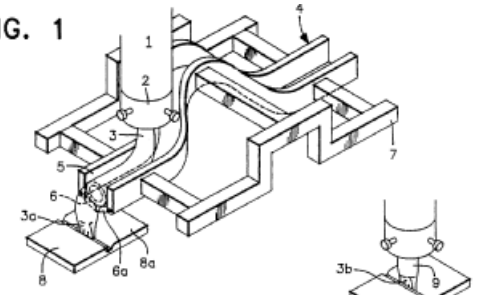

FIG. 2

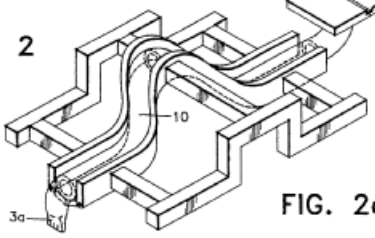

FIG. 2a



FIG. 3

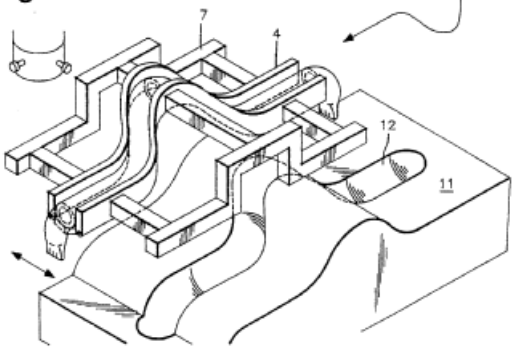

B29C 49/42424

{Deforming or closing the preform ends, e.g. pinching and welding}

Definition statement

This place covers:

Illustrative example of subject matter classified in this group:

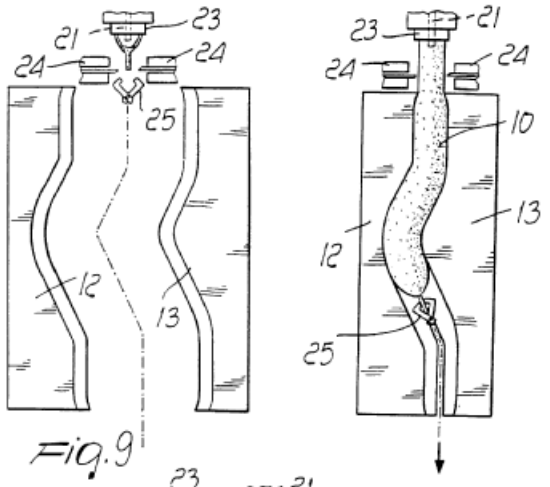

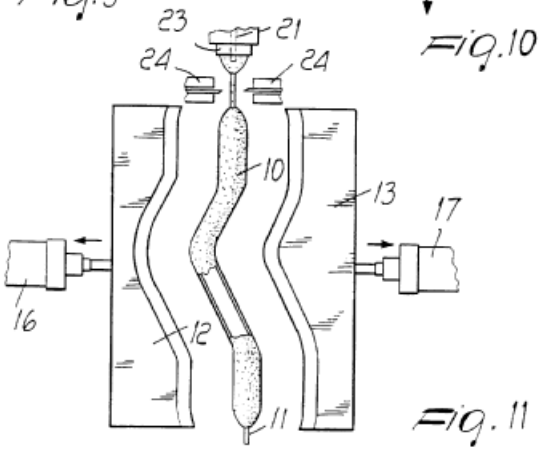

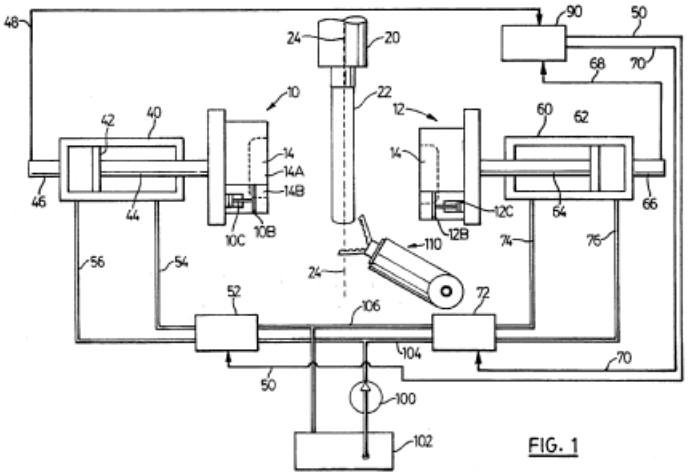

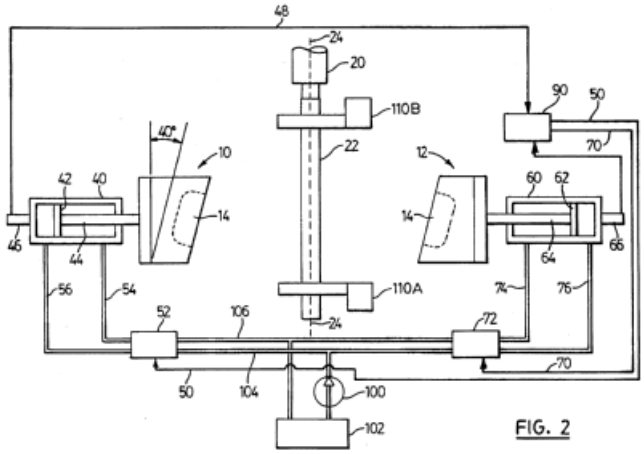
48
24
20
110B
90
50
40°
10
22
12
70
42
40
60
62
14
14
46
44
64
66
56
54
110A
74
76
52
106
24
72
70
50
104
100
102

FIG. 2

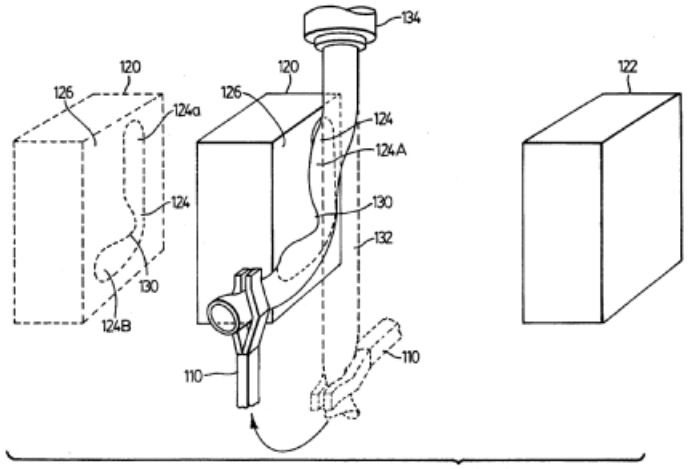
134
120
126
124a
120
126
122
124
124A
130
132
124
130
124B
110
110

FIG. 3

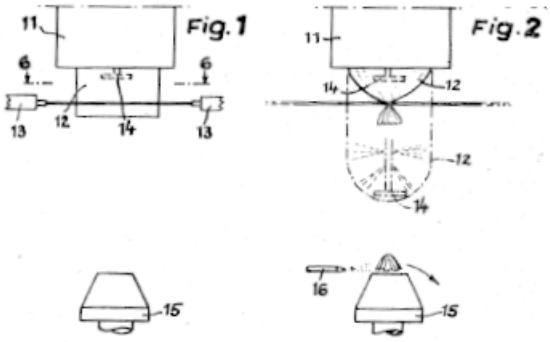
11
Fig. 1
6
6
13
12
14
13
11
Fig. 2
14
12
12
14
15
16
15

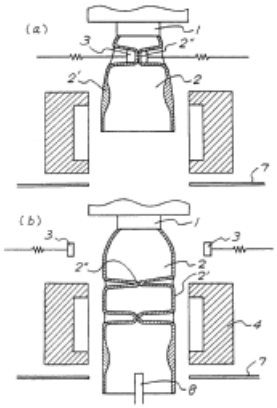

FIG. 1

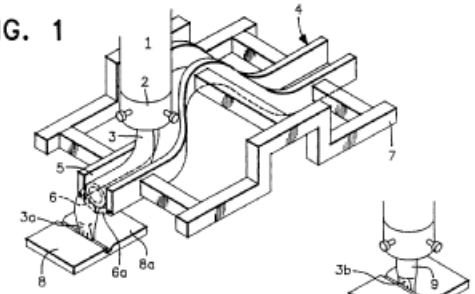

FIG. 2

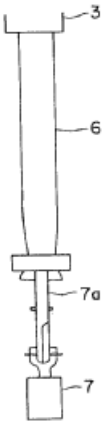

B29C 49/42426

{by pressure difference deforming parts of the preform}

Definition statement

This place covers:

Devices where the pressure differential is pneumatic (e.g. vacuum, pressurized gas, ducted air, etc,) in nature.

Illustrative example of subject matter classified in this group:

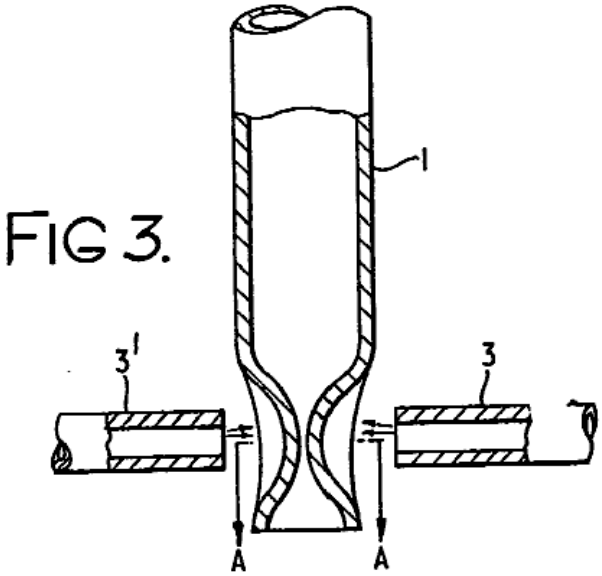

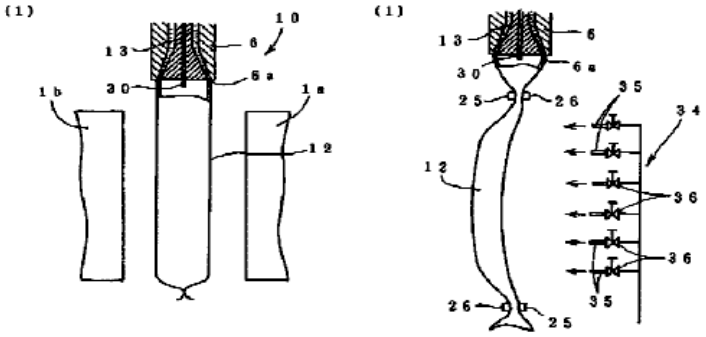

B29C 49/42428

{in a separate pre-moulding station}

Definition statement

This place covers:

Illustrative example of subject matter classified in this group:

FIG. 1

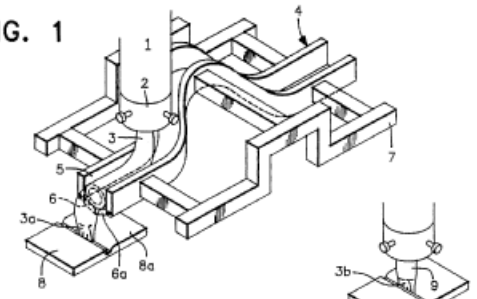

FIG. 2

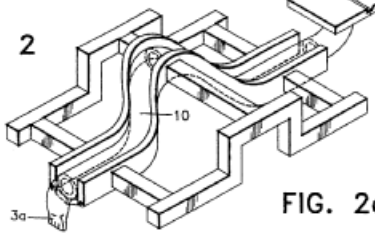

FIG. 2a



FIG. 3

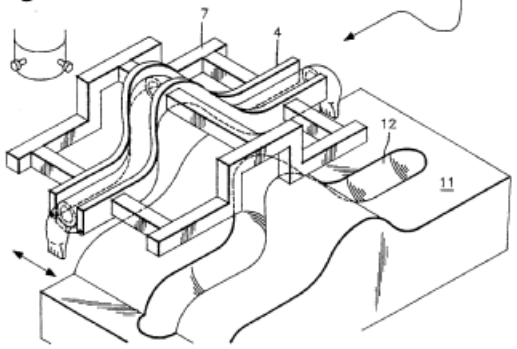

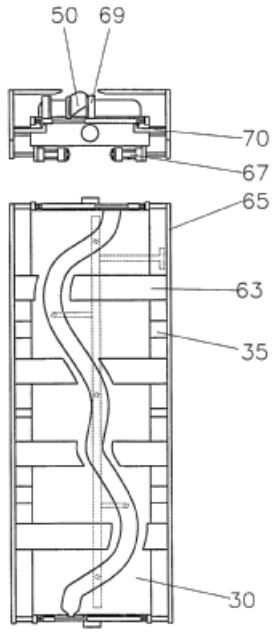

B29C 49/42442

{by moving the extruder head}

Definition statement

This place covers:

Devices where the deformation is caused by the extruder head movement.

Illustrative example of subject matter classified in this group:

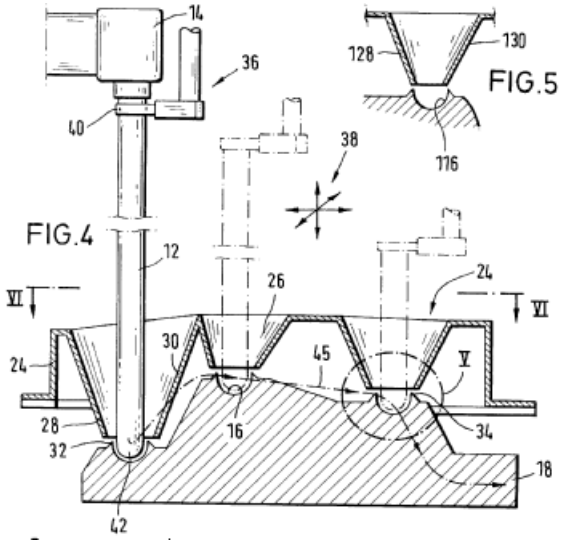

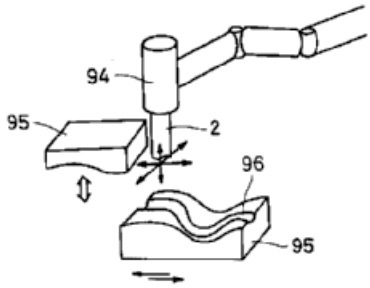

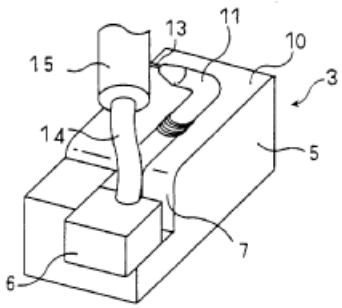

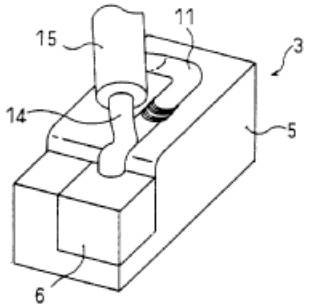

B29C 49/42444

{by moving the transport means}

Definition statement

This place covers:

Devices where the deformation is caused by the transport means.

Illustrative example of subject matter classified in this group:

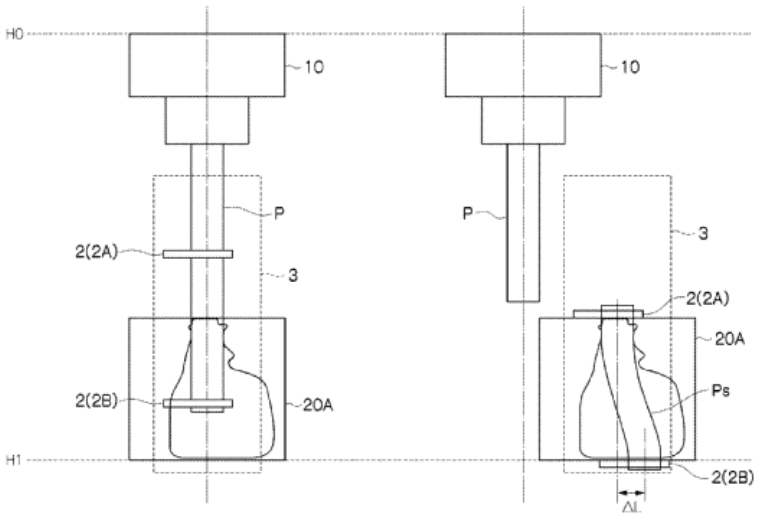

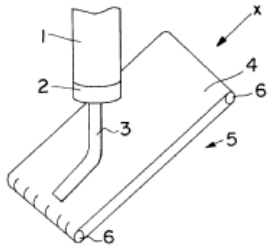

FIG. 1

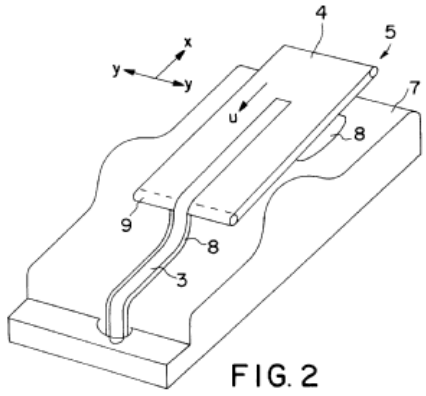

FIG. 2

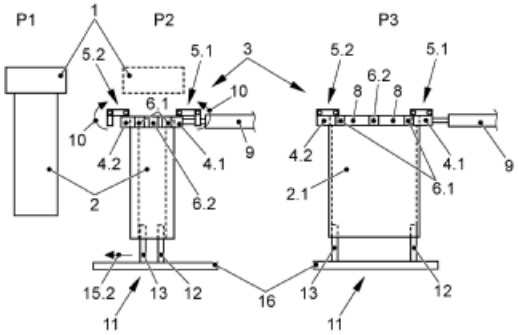
P1
P2
P3
1
5.2
5.1
3
10
6.1
4.2
4.1
9
2
6.2
2.1
8
15.2
13
12
16
11

FIG. 1a

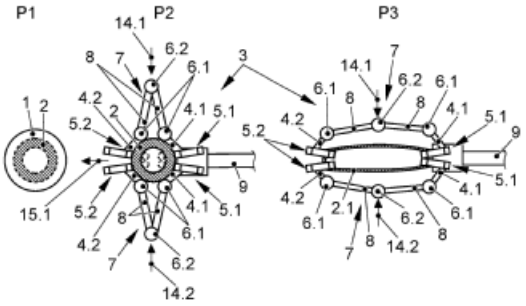
P1
P2
P3
14.1
6.2
6.1
3
8
7
4.2
2
4.1
5.1
5.2
1
9
15.1
14.2
2.1

FIG. 1b

B29C 49/42446

{by using a robot arm or similar actuator}

Definition statement

This place covers:

Illustrative example of subject matter classified in this group:

Fig. 5

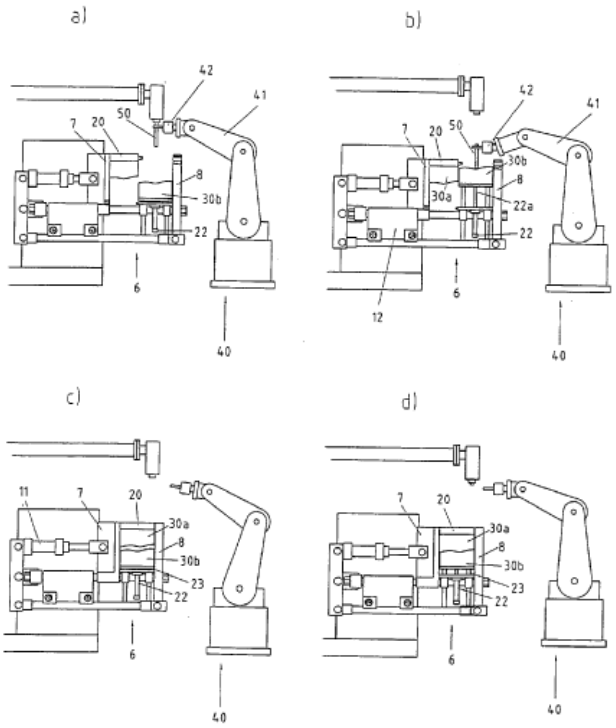

Fig. 8

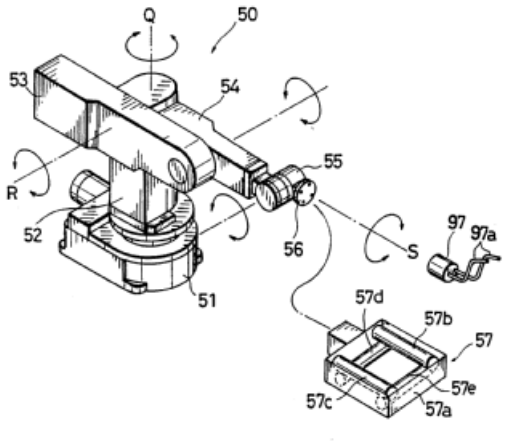

Fig. 15a

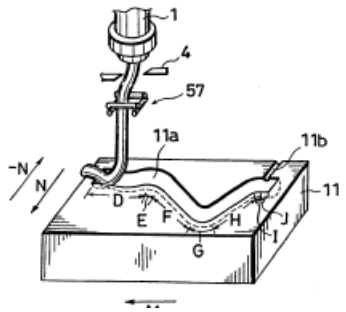

Fig. 15b

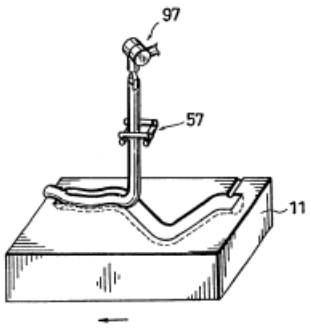

Fig. 15c

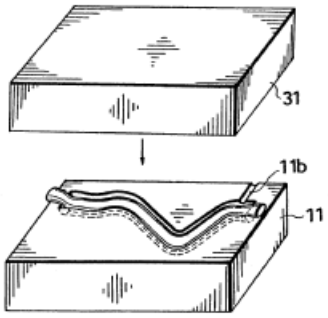

Fig. 15d

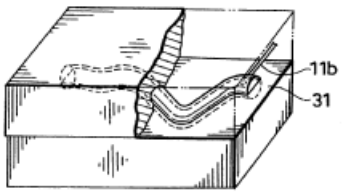

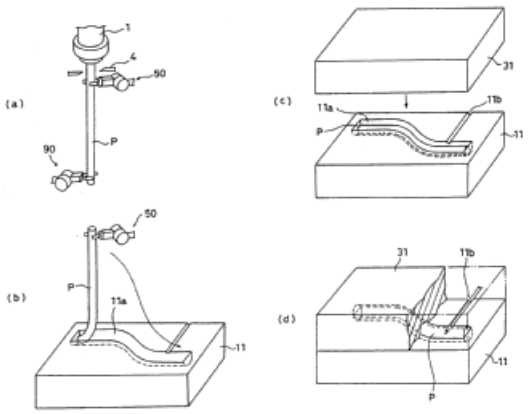

B29C 49/42448

{by moving the mould}

Definition statement

This place covers:

Illustrative example of subject matter classified in this group:

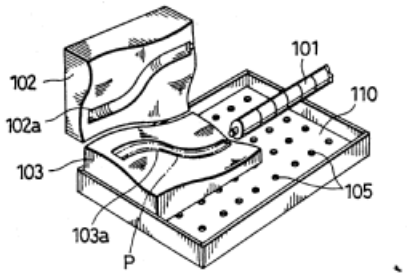

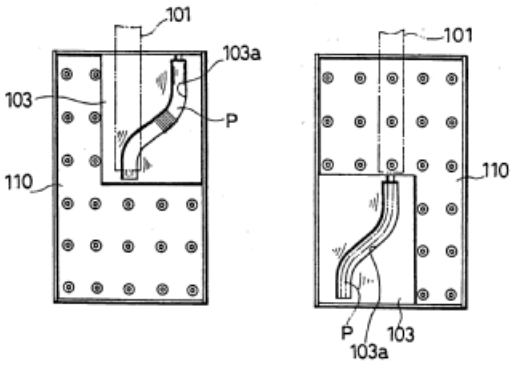

FIG.5A

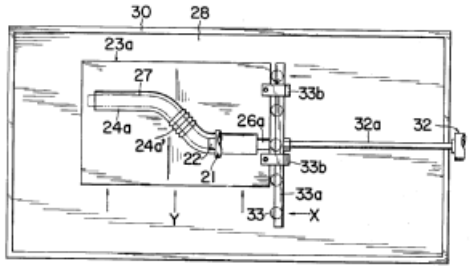

FIG.5B

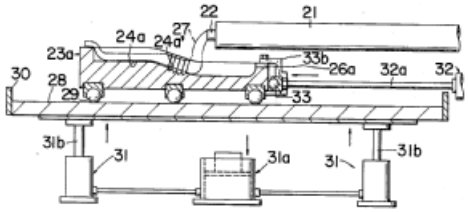

B29C 49/4245

{aided by air floating}

Definition statement

This place covers:

Devices that use air to float/lift the parison while in the mould prior to the blow-moulding step.

Illustrative example of subject matter classified in this group:

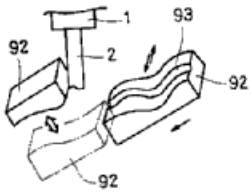

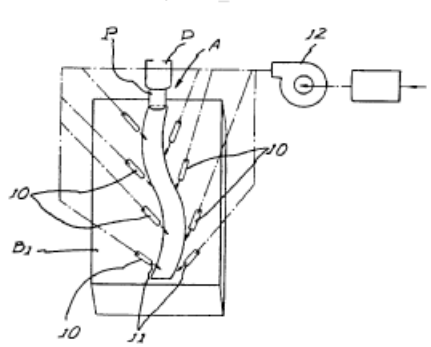

B29C 49/42452

{The mould opening plane being horizontal}

Definition statement

This place covers:

Illustrative example of subject matter classified in this group:

Fig. 1

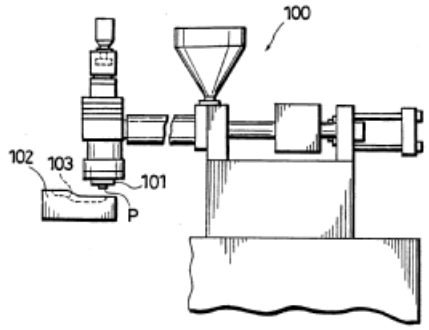

Fig. 4

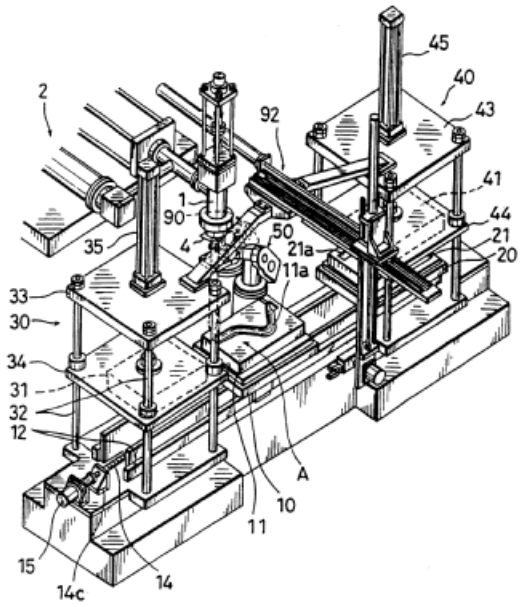

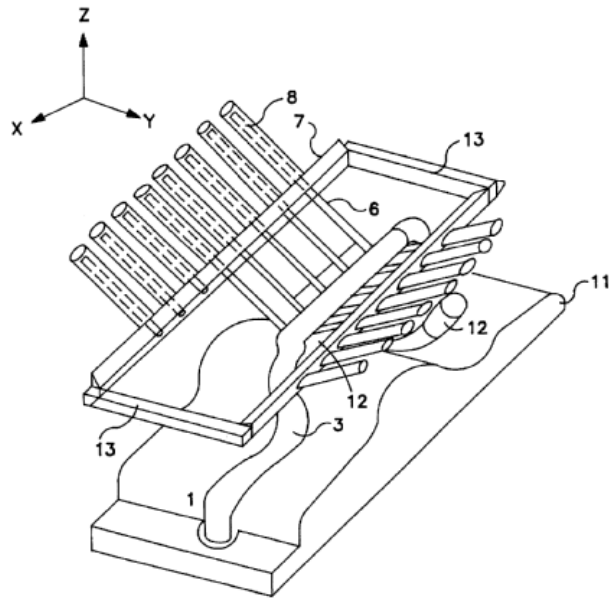

B29C 49/42454

{The mould opening plane being vertical}

Definition statement

This place covers:

Illustrative example of subject matter classified in this group:

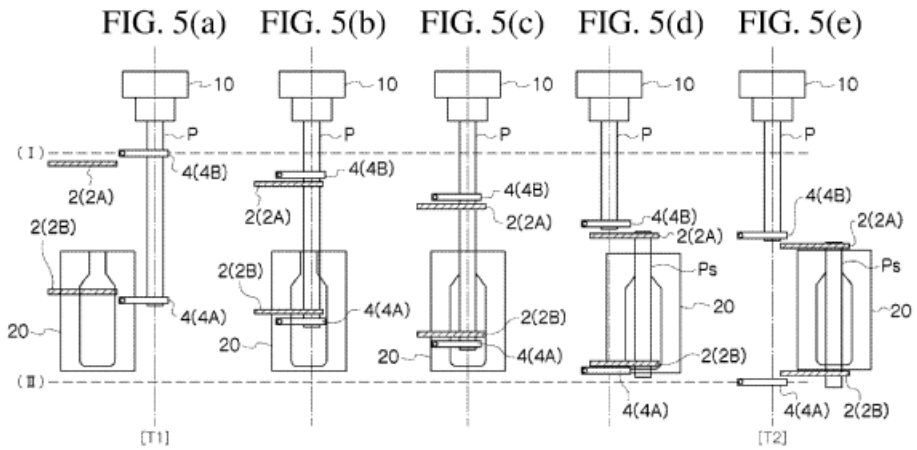

Fig. 1A

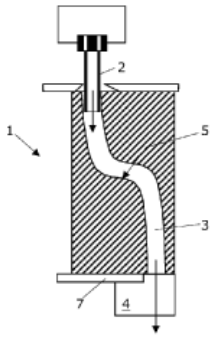

Fig. 1B

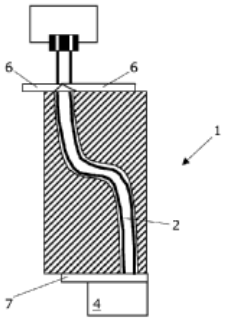

Fig. 1C

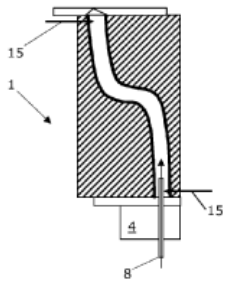

Fig. 1D

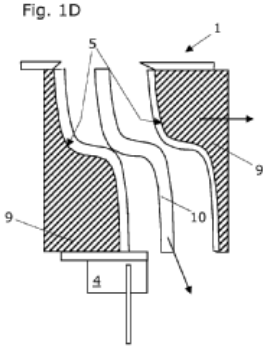

B29C 49/4247

{using spreading or extending means}

Definition statement

This place covers:

Spreading the open end or other parts of the preform or parison by mechanical means or vacuum grippers before blow-moulding.

Illustrative example of subject matter classified in this group:

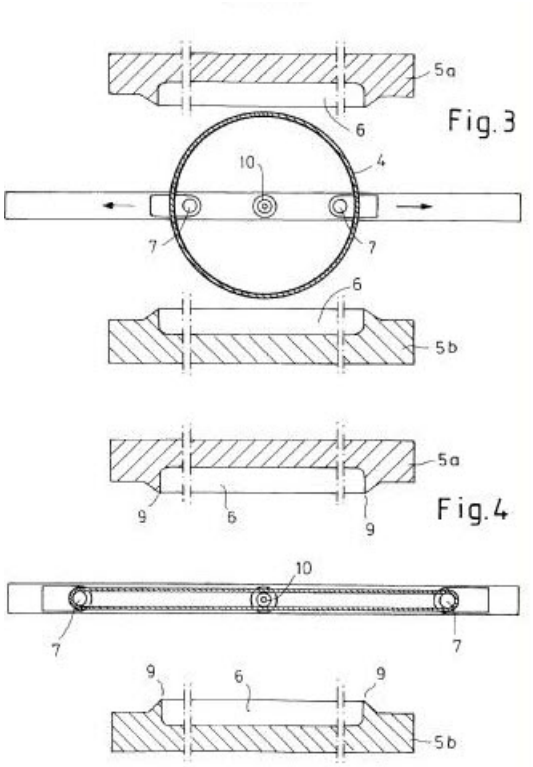

References

Informative references

Attention is drawn to the following places, which may be of interest for search:

Shaping of tube ends	B29C 57/00

B29C 49/425

{rods or bars entering the preform}

Definition statement

This place covers:

llustrative example of subject matter classified in this group:

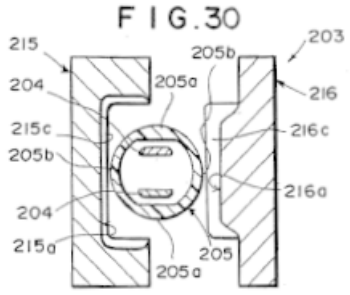

F I G.31

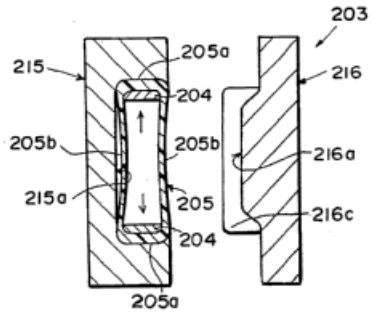

B29C 49/4251

{by foaming}

Definition statement

This place covers:

Deformation caused by activation of blowing/foaming agents (which can include the depressurization of pressurized gases when the preform/parison leaves the extruder) in the preform/parison prior to the blow-moulding step.

Illustrative example of subject matter classified in this group:

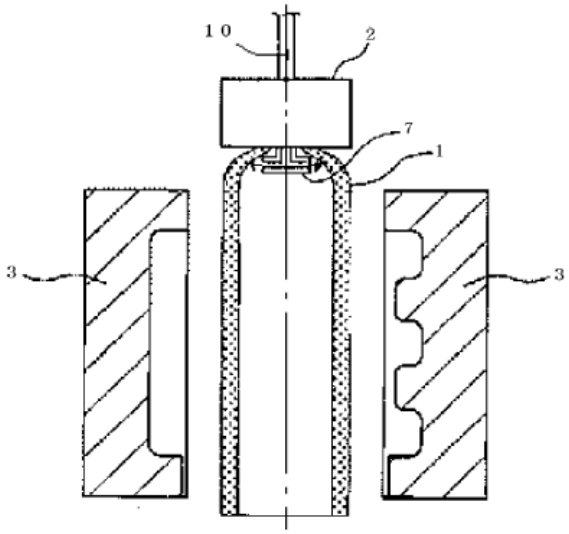

B29C 49/427

{Auxiliary deformation, i.e. not caused by pre-stretching or blowing not otherwise provided for}

Definition statement

This place covers:

Deformation that occurs during the blow-moulding process caused by mould elements that activate after the mould closes and prior to the end of the blowing process.

Illustrative example of subject matter classified in this group:

FIG.3

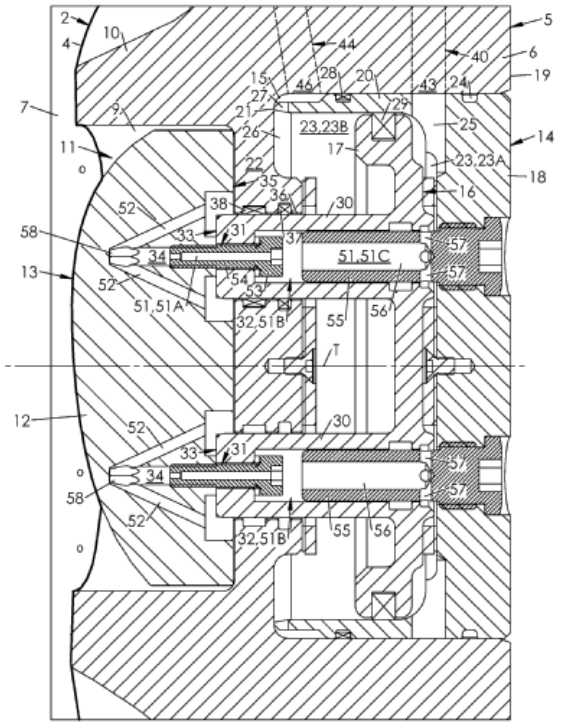

FIG.4

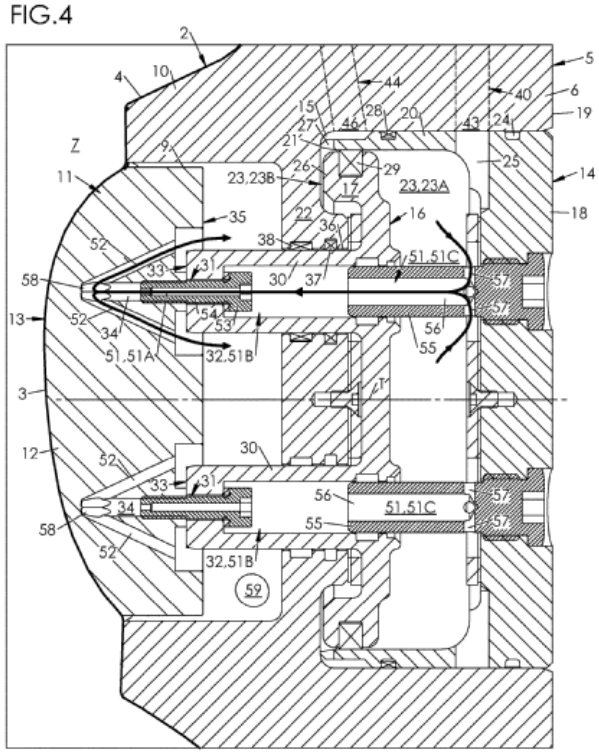

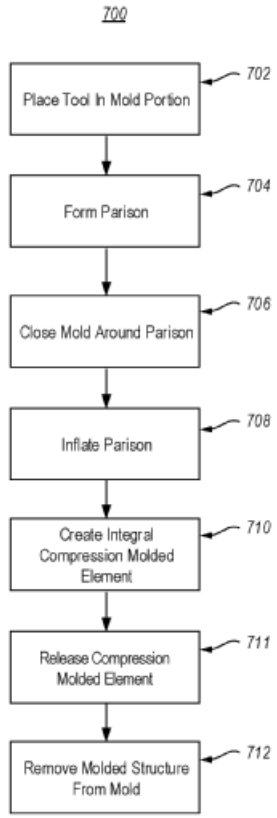

Fig. 24

B29C 49/42802

{a closure or a sealing foil to the article or pincing the opening}

Definition statement

This place covers:

Where the closure or sealing foil is added after the blow-moulding process.

Illustrative example of subject matter classified in this group:

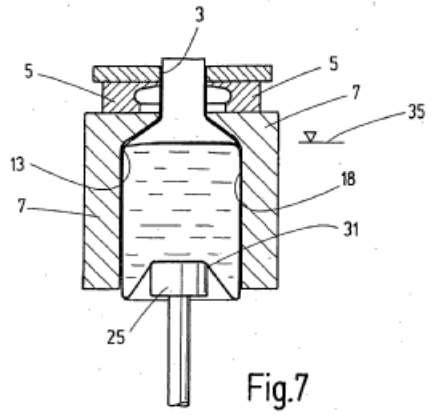

Fig.7

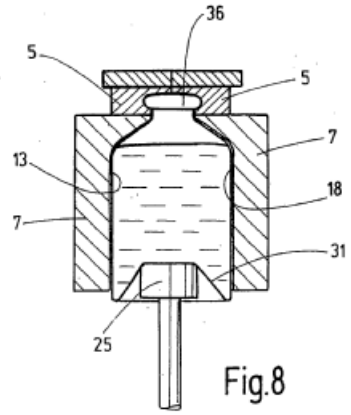

Fig.8

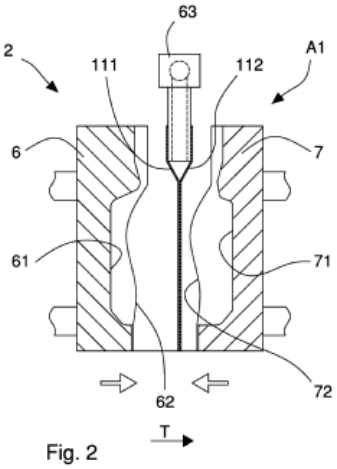

Fig. 2

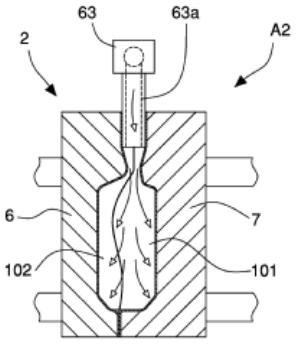

Fig. 3

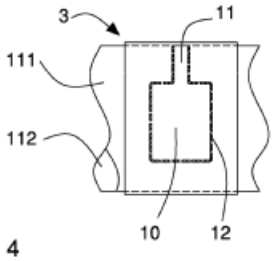

Fig. 4

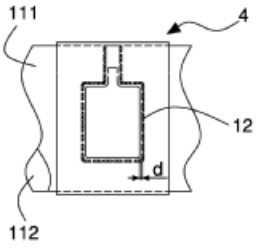

Fig. 5

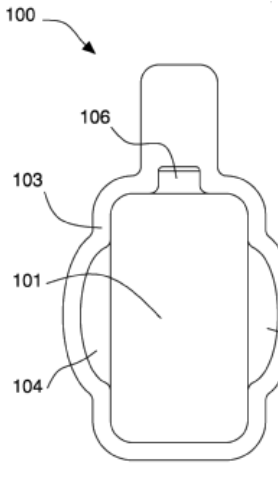

Fig. 6

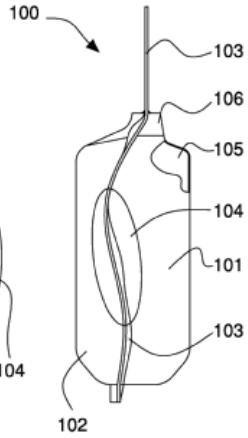

Fig. 7

FIG. 4

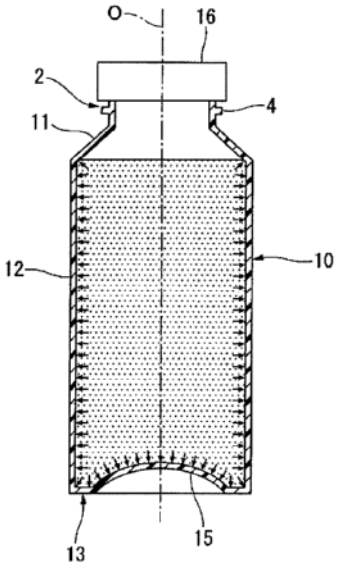

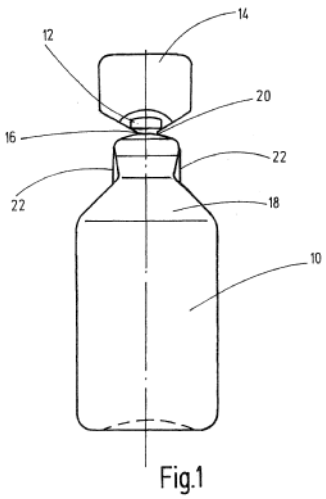

Fig.1

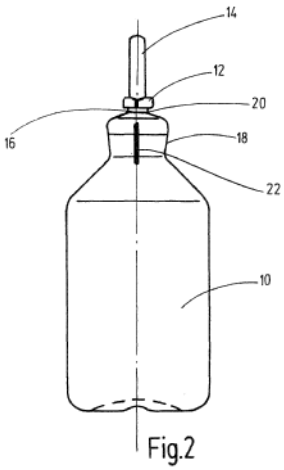

Fig.2

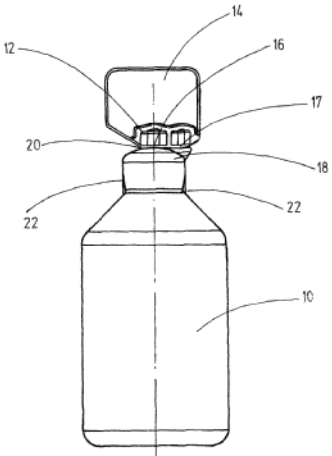

Fig.3a

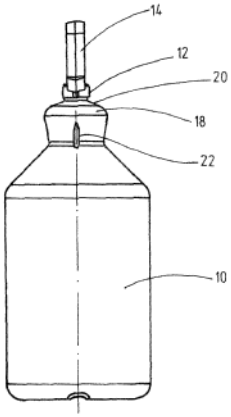

Fig.3b

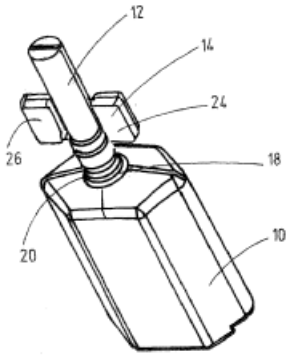

Fig.4

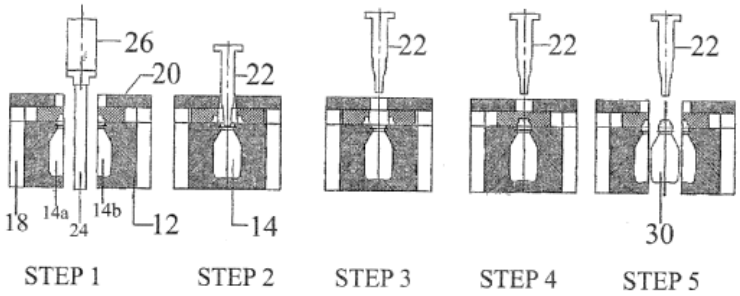

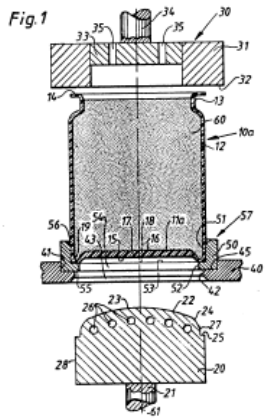

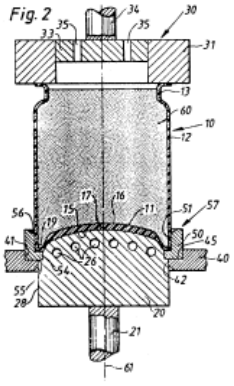

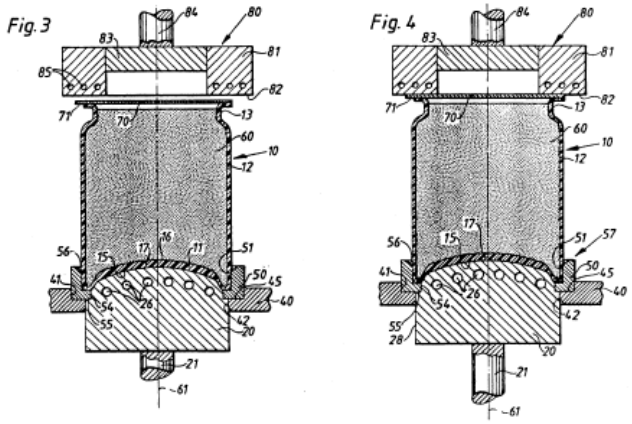

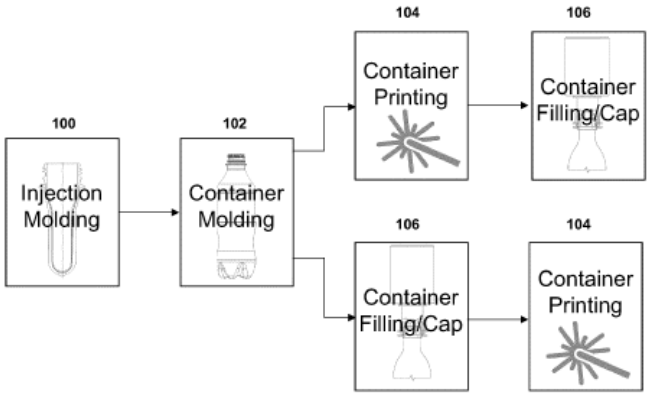

FIG. 4

B29C 49/42806

{auxiliary parts to the article, e.g. handle (B29C 49/42802 takes precedence)}

Definition statement

This place covers:

Illustrative example of subject matter classified in this group:

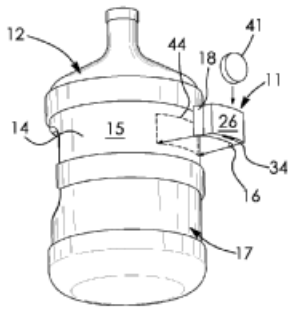

FIG. 4

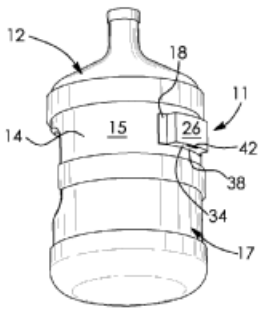

FIG. 5

B29C 49/42809

{while in the mould, i.e. with other material than the blowing fluid}

Definition statement

This place covers:

Illustrative example of subject matter classified in this group:

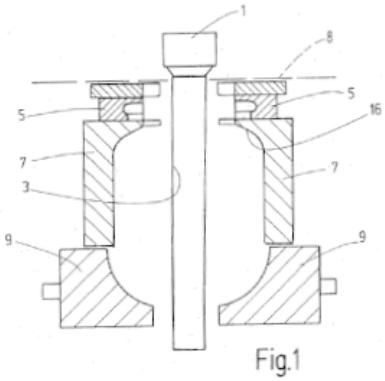

Fig.1

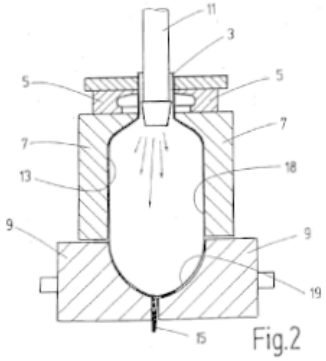

Fig.2

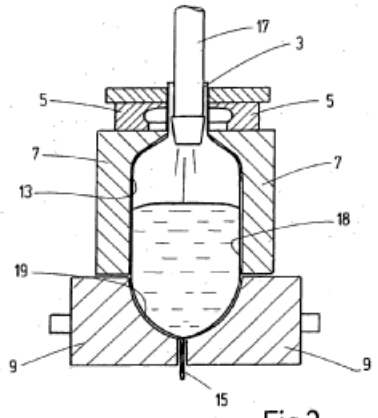

Fig.3

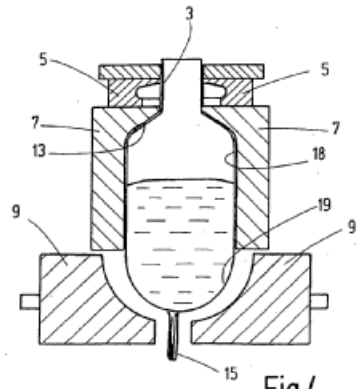

Fig.4

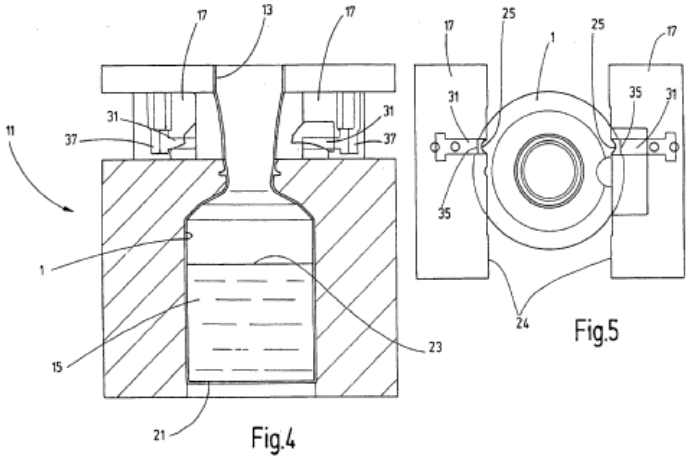

Fig.4 Fig.5

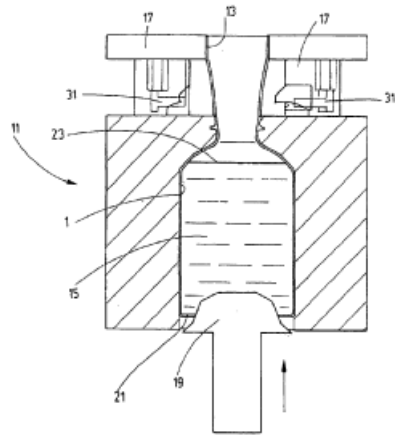

Fig.6

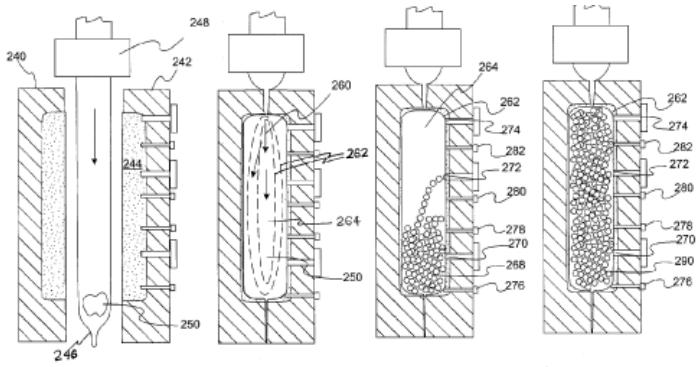

Fig. 13A *Fig. 13B* *Fig. 13C* *Fig. 13D*

B29C 49/4281

{outside the mould}

Definition statement

This place covers:

Illustrative example of subject matter classified in this group:

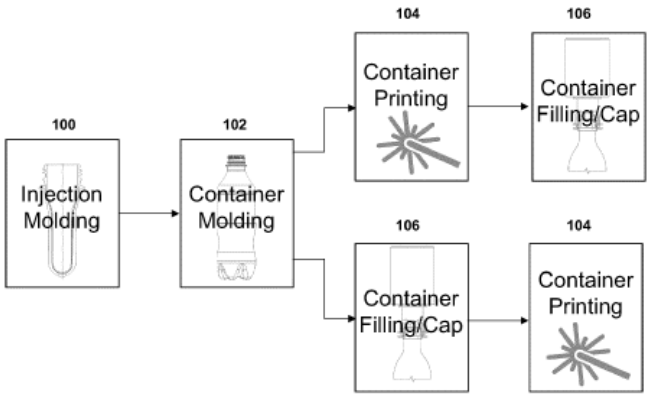

FIG. 4

B29C 49/42815

{Emptying the article, e.g. emptying hydraulic blowing fluid}

Definition statement

This place covers:

Illustrative example of subject matter classified in this group:

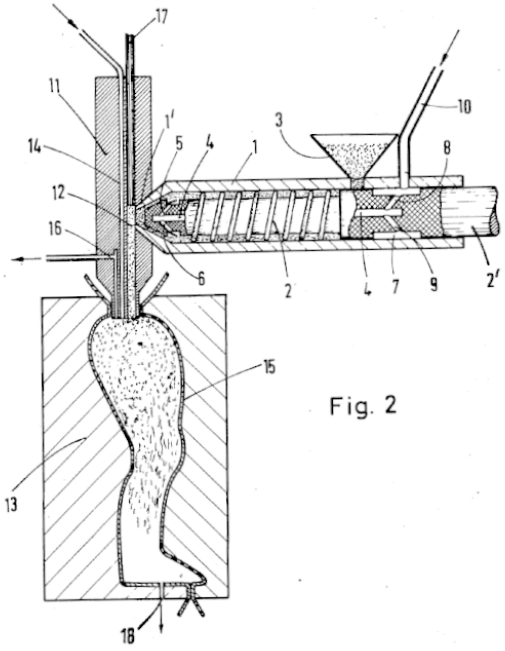

Fig. 2

B29C 49/42824

{Cooling the article outside the mould}

Definition statement

This place covers:

Illustrative example of subject matter classified in this group:

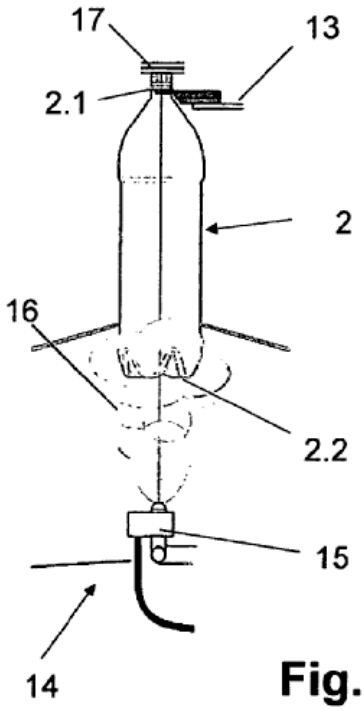

Fig. 3

B29C 49/42826

{Separating burr or other part from the article, e.g. using mechanical means}

Definition statement

This place covers:

Removal of burrs, flash, or other unwanted moulding effects caused by the interaction of the blown article and the mould during the blowing process.

Illustrative example of subject matter classified in this group:

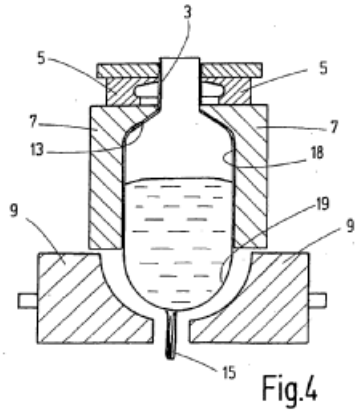

Fig.4

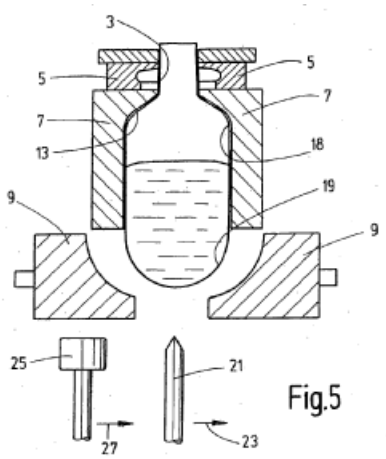

Fig.5

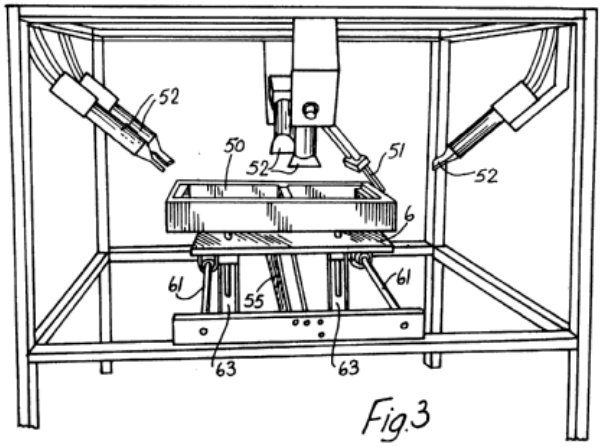

Fig.3

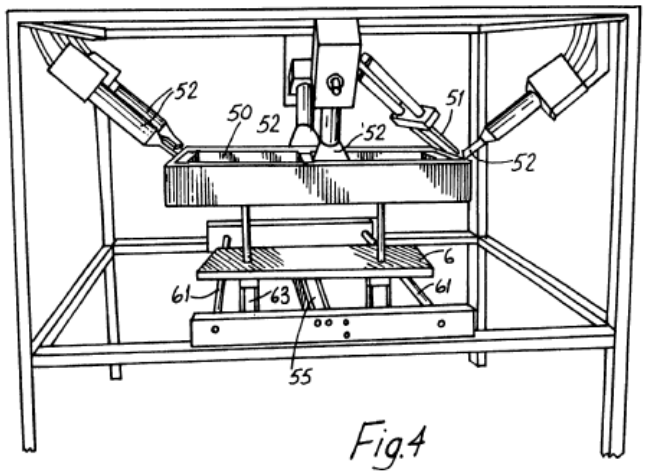

Fig.4

B29C 49/42828

{Coating or painting the article}

Definition statement

This place covers:

Illustrative example of subject matter classified in this group:

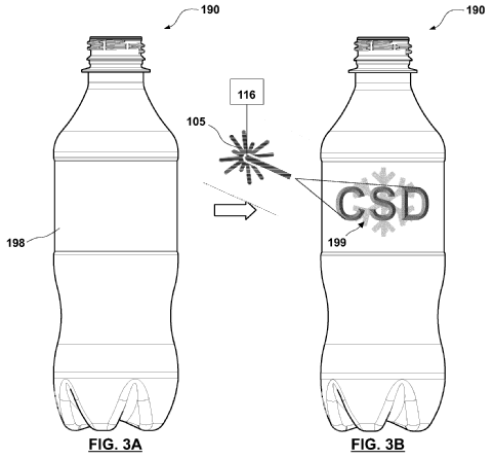

FIG. 3A FIG. 3B

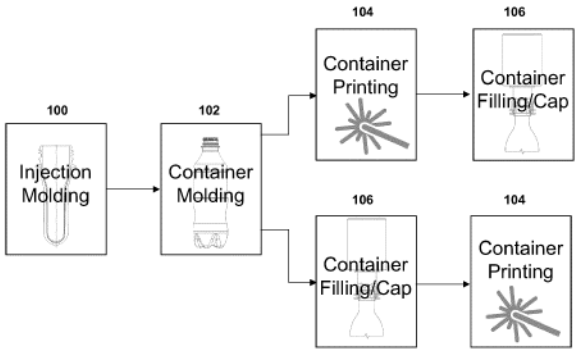

FIG. 4

B29C 49/4283

{Deforming the finished article}

Definition statement

This place covers:

Illustrative example of subject matter classified in this group:

Fig. 3A

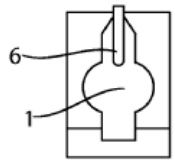

Fig. 3B



Fig. 3C

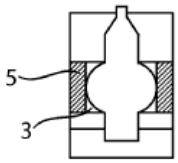

Fig. 3D



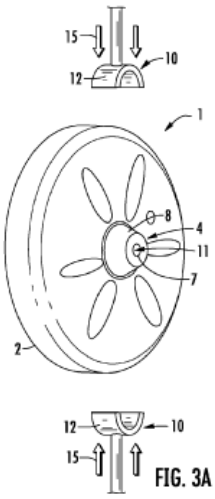

FIG. 3A

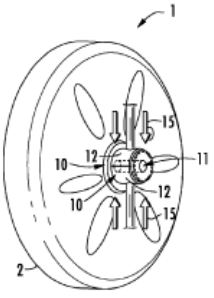

FIG. 3B

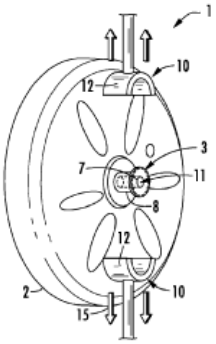

FIG. 3C

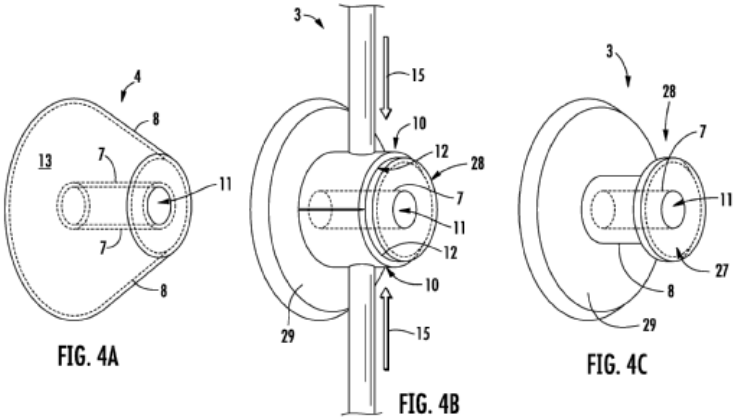

B29C 49/42832

{Moving or inverting sections, e.g. inverting bottom as vacuum panel}

Definition statement

This place covers:

Deformation that occurs after the blow-moulding process that moves a blown article surface to a new final location.

Illustrative example of subject matter classified in this group:

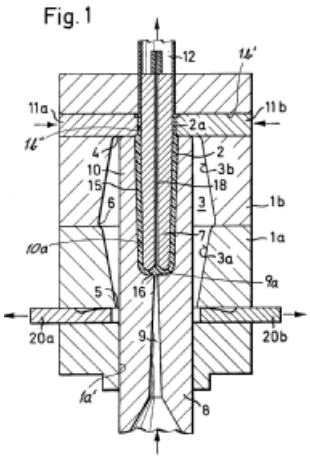

Fig. 2

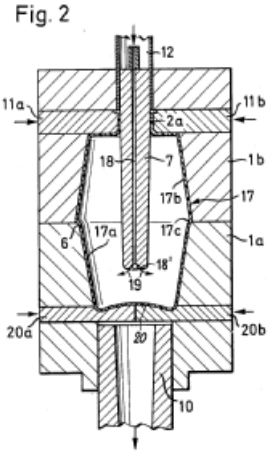

Fig. 3

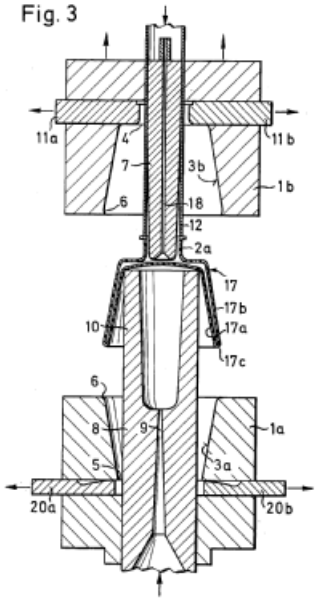

Fig. 4a

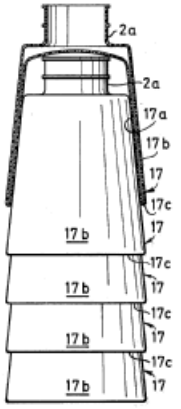

Fig. 4b

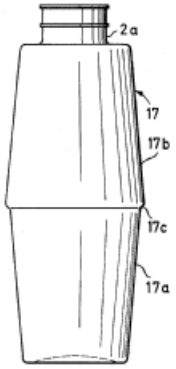

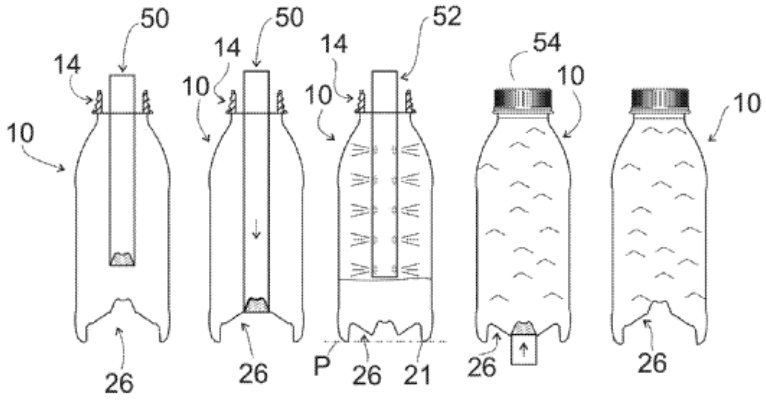

FIG 11A FIG 11B FIG 11C FIG 11D FIG 11E

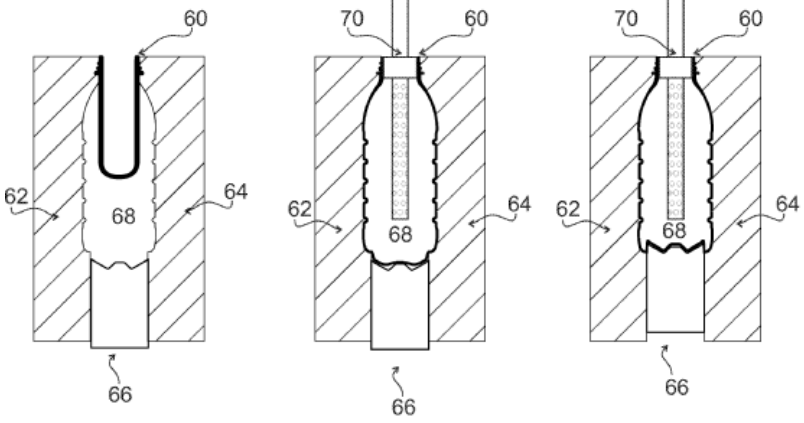

FIG. 12A FIG. 12B FIG. 12C

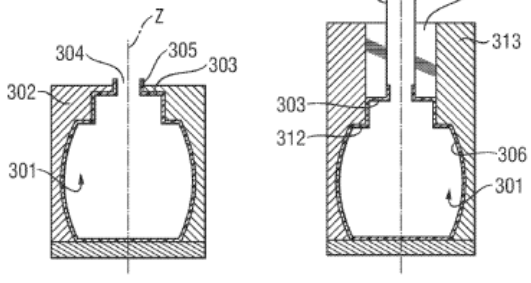

Fig. 2A Fig. 2B

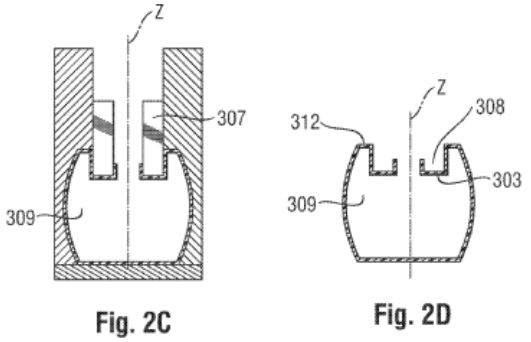

Fig. 2C Fig. 2D

B29C 49/42834

{Foaming, expanding or stretching the article}

Definition statement

This place covers:

Illustrative example of subject matter classified in this group:

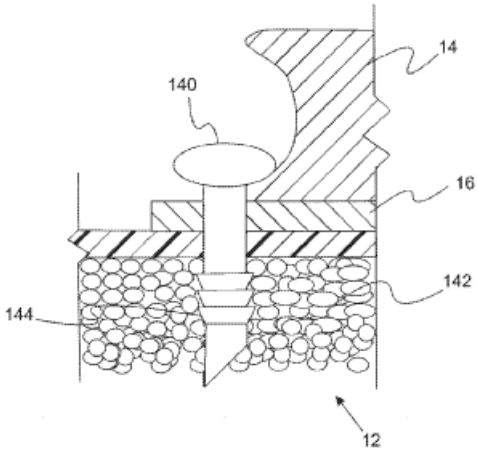

Fig. 7

B29C 49/42836

{Collapsing or folding the article, e.g. to save space for transport}

Definition statement

This place covers:

Illustrative example of subject matter classified in this group:

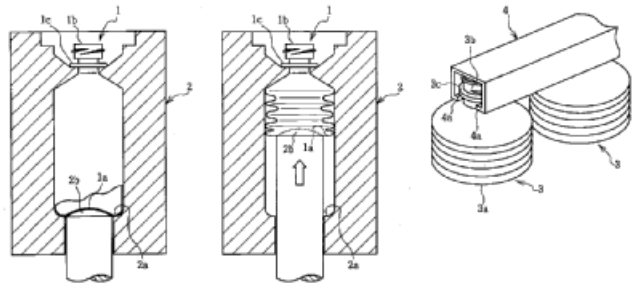

B29C 2049/4296

{for avoiding blowing fluid from leaking, e.g. between the blowing means and the preform neck}

Definition statement

This place covers:

Structures and operations associated with the sealing means that prevent blowing fluid from leaking.

Illustrative example of subject matter classified in this group:

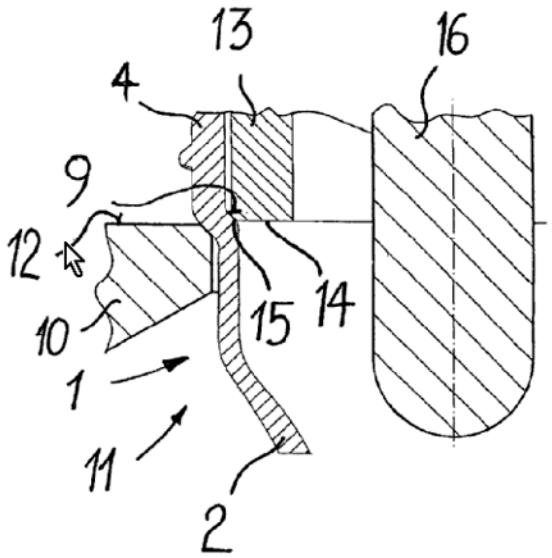

Fig. 2

The applied pressure force of the blow nozzle 13 is selected such that the outside edge 15 of the blow nozzle 13 sinks somewhat into the conical surface 9. This improves sealing.

B29C 2049/4298

{for sealing clean or sterile room or volume}

Definition statement

This place covers:

Structures associated with sealing spaces to avoid contamination.

B29C 2049/431

{for sealing moulds, e.g. for vacuum air floating}

Definition statement

This place covers:

Structures associated with the sealing means that reduce or prevent air from entering the mould.

B29C 49/44

for applying pressure through the walls of an inflated bag

Definition statement

This place covers:

Illustrative example of subject matter classified in this group:

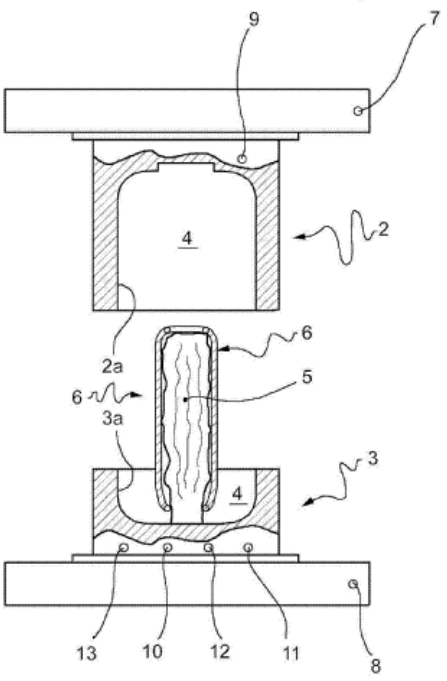

B29C 49/46

characterised by using particular environment or blow fluids other than air

Definition statement

This place covers:

- Inert gas as blowing fluid

- Reactive gas as a blowing fluid

- Sterile gas as a blowing fluid

- Hot gas as a blowing fluid

- Filtered air as a blowing fluid

- Explosive gas mixture as a blowing fluid

- Incompressible blowing fluids, e.g. filling liquid is used as blowing fluid

- Clean rooms

References

Informative references

Attention is drawn to the following places, which may be of interest for search:

Method or apparatus for sterilising in general	A61L 2/00
Cleaning in general	B08B 1/00
Concurrent cleaning, filling and closing of bottles without a blow-moulding operation	B67C 7/00

Special rules of classification

Incompressible blowing fluids which stay in the formed container after blow-moulding have to be also classified in B65B 3/022.

B29C 2049/4698

{Pressure difference, e.g. over pressure in room}

Definition statement

This place covers:

Methods and apparatus that create a pressure difference.

B29C 49/48

Moulds

References

Informative references

Attention is drawn to the following places, which may be of interest for search:

Moulds characterised by the material or the manufacturing process in general	B29C 33/38 - B29C 33/405

B29C 49/4802

{with means for locally compressing part(s) of the parison in the main blowing cavity}

Definition statement

This place covers:

Illustrative example of subject matter classified in this group:

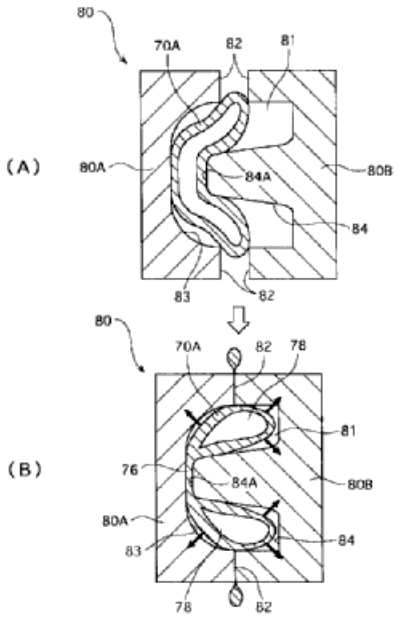

B29C 49/4812

{and welding opposite wall parts of the parisons or preforms to each other}

Definition statement

This place covers:

Where opposing wall parts of the parisons or preforms are joined to each other.

B29C 49/4815

{by means of movable mould parts}

Definition statement

This place covers:

Illustrative example of subject matter classified in this group:

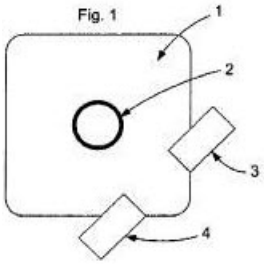

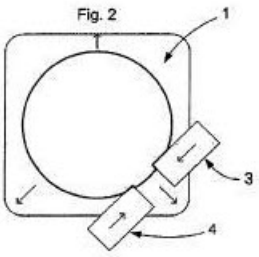

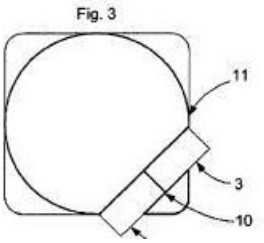

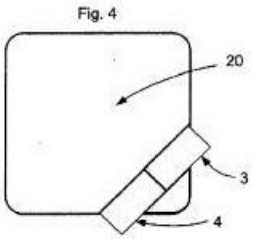

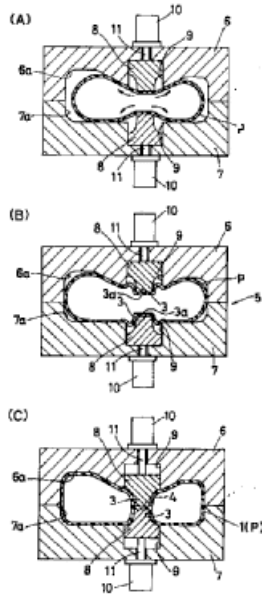

B29C 49/4817

{with means for closing off parison ends}

Definition statement

This place covers:

Illustrative example of subject matter classified in this group:

FIG.2(A)

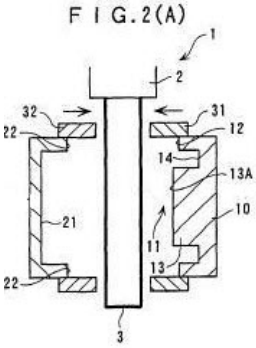

FIG.2(B)

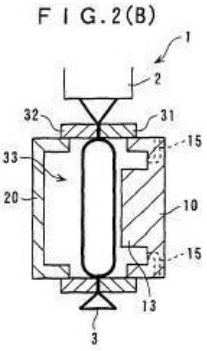

FIG.2(C)

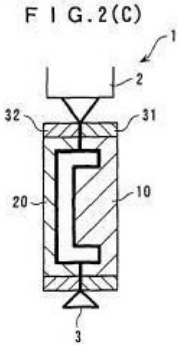

FIG.2(D)

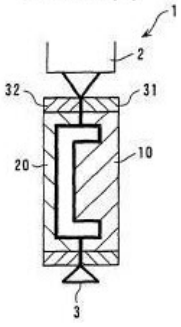

FIG. 1

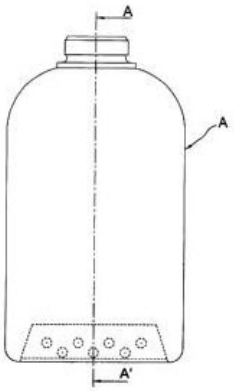

FIG. 2

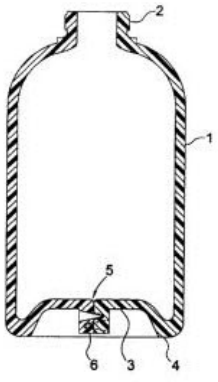

FIG. 3

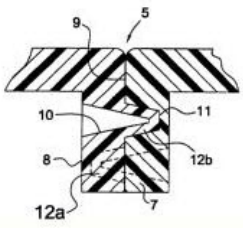

B29C 49/48185

{with more than one separate mould cavity}

Definition statement

This place covers:

With a plurality of mould cavities.

B29C 49/4819

{having different sizes or shapes of the mould cavities}

Definition statement

This place covers:

Having a plurality of mould cavities with different shapes or sizes.

B29C 49/482

{with means for moulding parts of the parisons in an auxiliary cavity, e.g. moulding a handle}

Definition statement

This place covers:

- WO2007063155

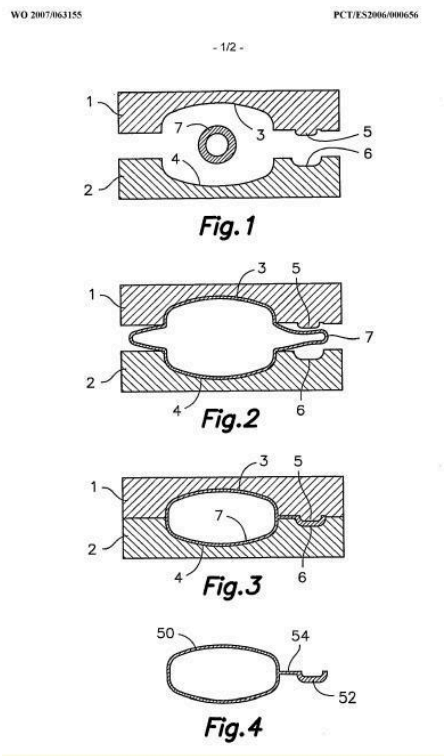

- EP1693240

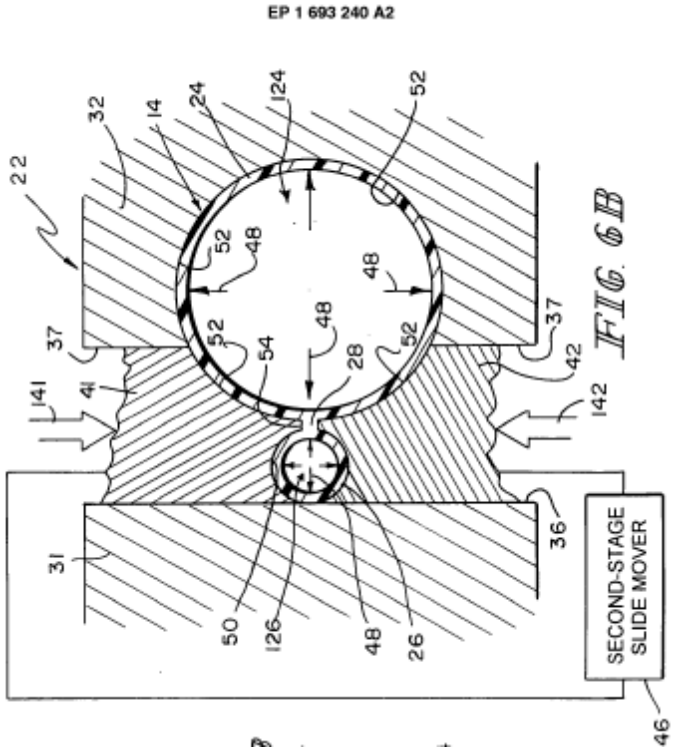
EP 1 693 240 A2
FIG. 6B
SECOND-STAGE SLIDE MOVER
22
32
14
24
124
52
48
37
42
54
28
141
41
142
36
31
50
126
26
46

B29C 49/4823

{with incorporated heating or cooling means}

Definition statement

This place covers:

- WO2005025835

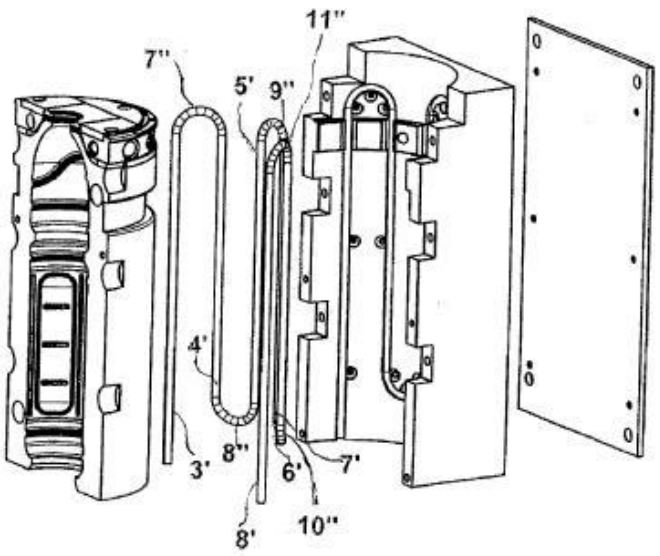

Fig. 2

- WO03033242

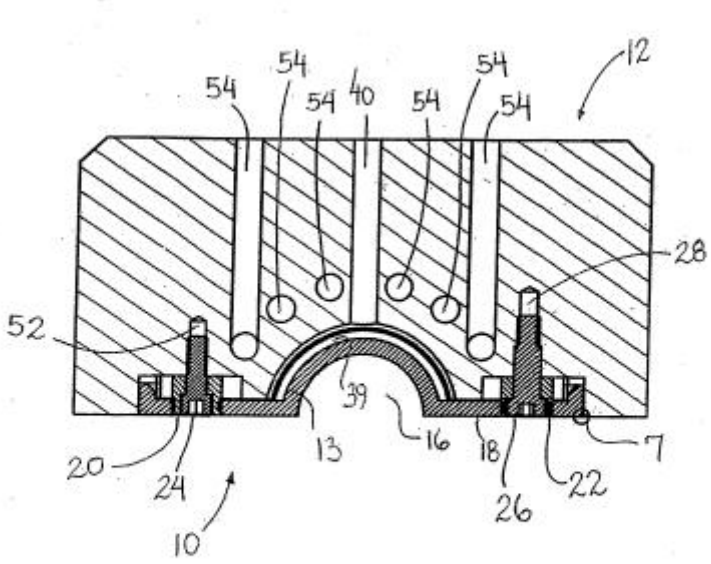

FIGURE 6

-

JP2289328

第２図

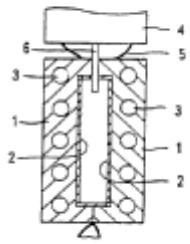

References

Informative references

Attention is drawn to the following places, which may be of interest for search:

Heating or cooling of moulds in general	B29C 33/02

Special rules of classification

When details of the heating or cooling means are indicated, then it is highly desirable to allocate additionally the following corresponding Indexing Codes for additional information:

- B29C 35/02, B29C 35/04 - B29C 2035/0883

- B29C 35/16, B29C 2035/1616 - B29C 2035/1691

B29C 2049/4854

{Heating or cooling from the inside of the cavity, e.g. using flames or other means}

Definition statement

This place covers:

Having means for heating or cooling from inside the mould cavity.

B29C 2049/48615

{Aligning the mould assembly position e.g. adapting center to the extruded parison}

Definition statement

This place covers:

With means or methods for aligning neck portions of bottle producing moulds.

B29C 2049/4862

{Aligning the mould part position e.g. left half to right half}

Definition statement

This place covers:

Means or methods for aligning mould part positions.

B29C 2049/4863

{Mould identification, e.g. chip on mould with ID and process data}

Definition statement

This place covers:

With mould identification means.

B29C 49/487105

{characterised by the manufacturing process}

Definition statement

This place covers:

Where the mould is characterised by the manufacturing process of the mould.

B29C 2049/4881

{having a mandrel or core e.g. two mould halves with a core in-between}

Definition statement

This place covers:

Moulds having a mandrel or core between the mould halves.

B29C 2049/48825

{Asymmetric moulds, i.e. the parison is not in the center of the mould}

Definition statement

This place covers:

Moulds that are asymmetric allowing the parison to be off center.

B29C 2049/4883

{having cavity parts avoiding preform contact, e.g. partial free blow}

Definition statement

This place covers:

Moulds having cavity portions which do not contact the preform.

B29C 49/50

having cutting or deflashing means

Definition statement

This place covers:

-EP1645397

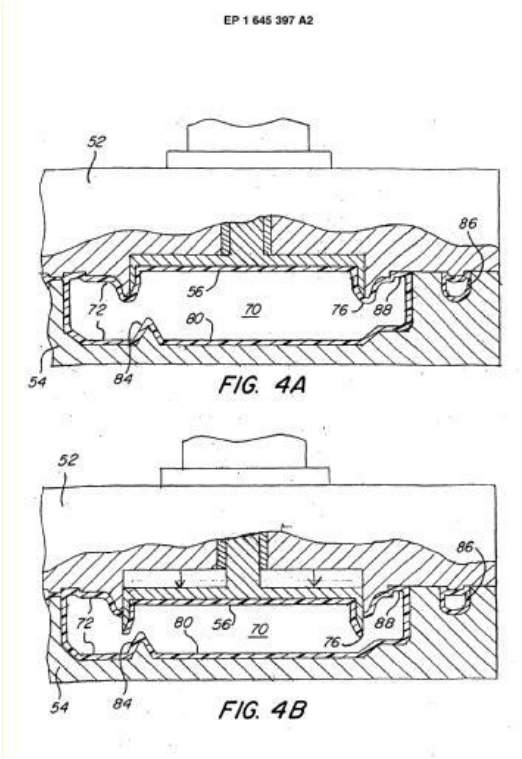

-US2005199577

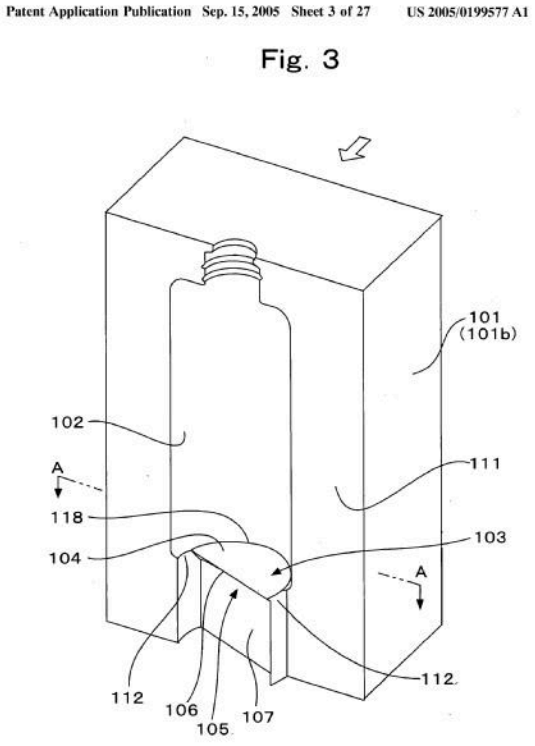

US2006175737

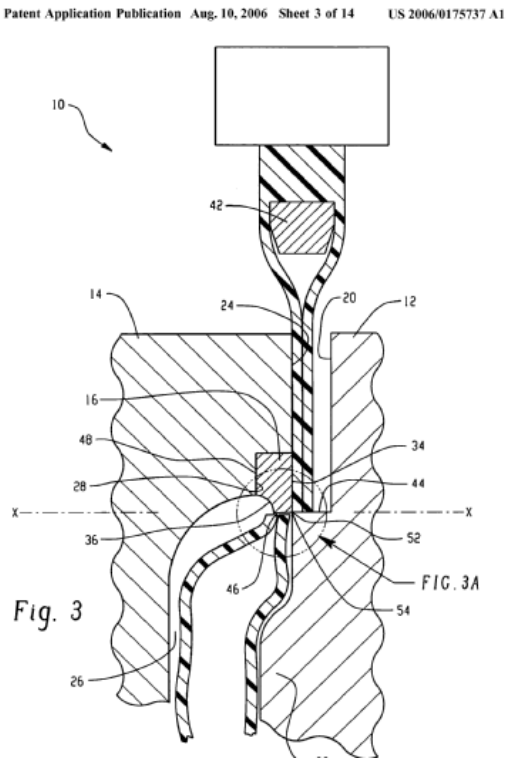

B29C 49/52

having decorating or printing means

Definition statement

This place covers:

- EP1005975

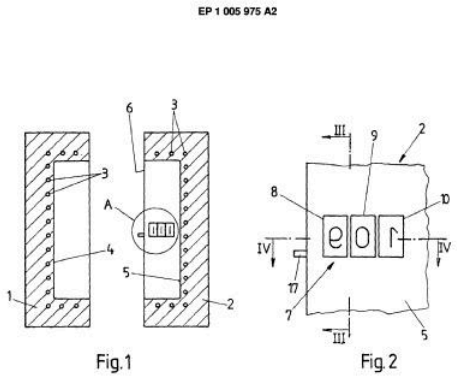

Fig.1 Fig.2

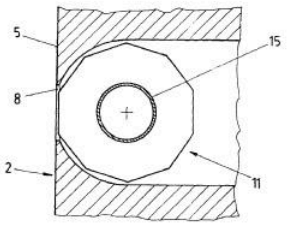

Fig. 3

US2004026355

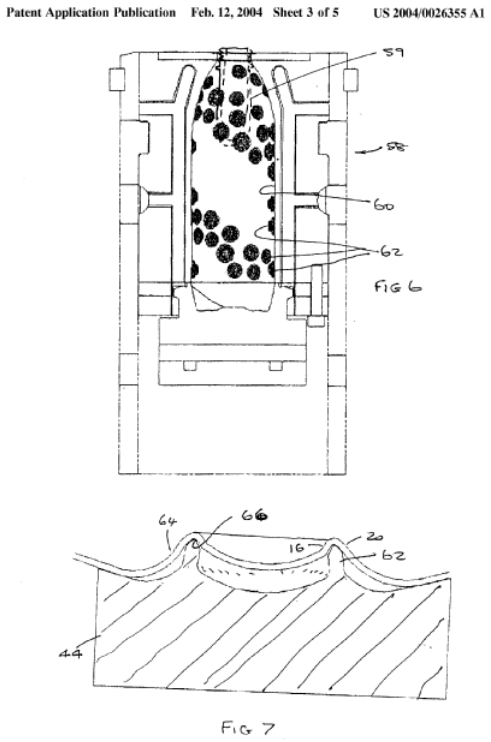

References

Informative references

Attention is drawn to the following places, which may be of interest for search:

Moulds characterised by the shape of the moulding surface in general	B29C 33/42

B29C 49/54

for undercut articles

Definition statement

This place covers:

- EP1908571

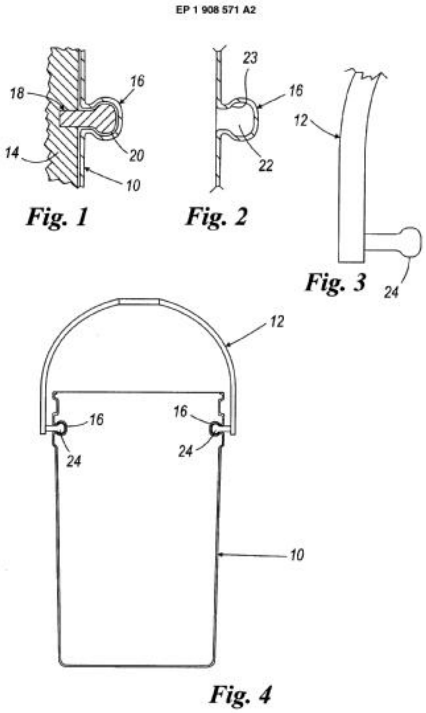

- JP63221020

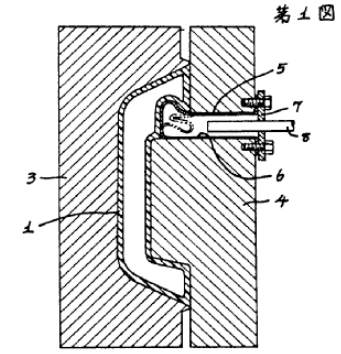

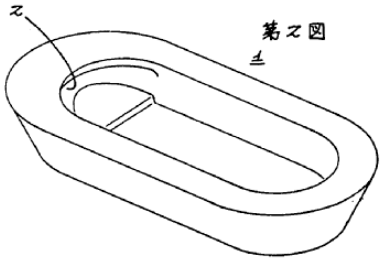

B29C 49/541

{having a recessed undersurface}

Definition statement

This place covers:

-US2008283533

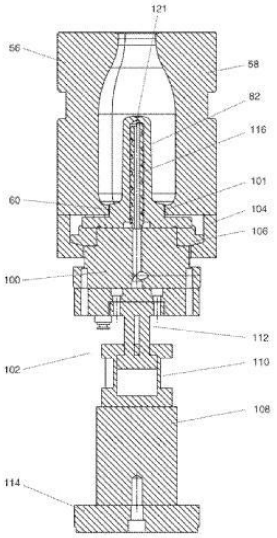

Figure 8

- DE1479563

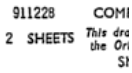

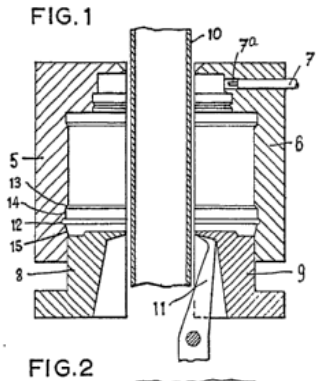

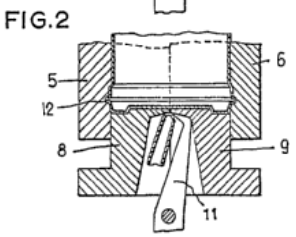

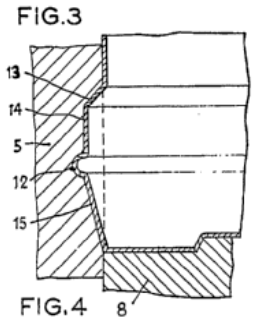

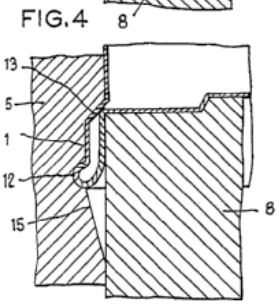

B29C 2049/542

{having means to facilitate the removal of the blow moulded articles}

References

Informative references

Attention is drawn to the following places, which may be of interest for search:

Moulds with means for, or specially constructed to facilitate, the removal of articles, e.g. of undercut articles	B29C 33/44

B29C 49/56

Opening, closing or clamping means

Definition statement

This place covers:

Illustrative example of subject matter classified in this group:

Cam driven opening and closing means

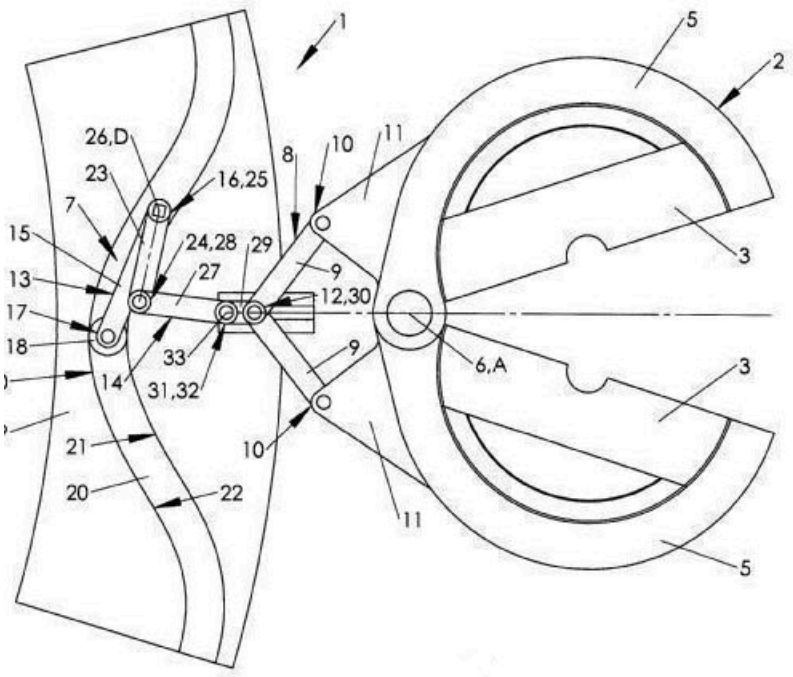

Mechanical opening closing mechanism

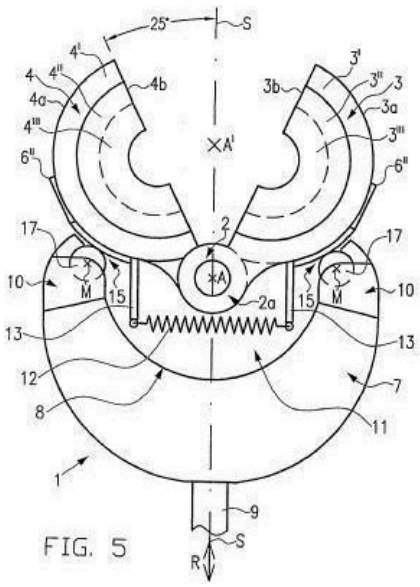

FIG. 5

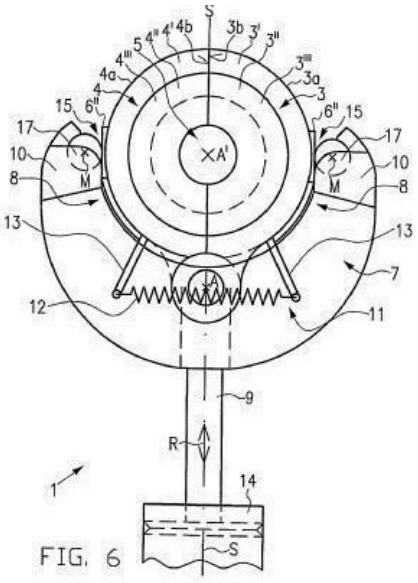

FIG. 6

Spindle driven (screw driven) opening closing mechanism

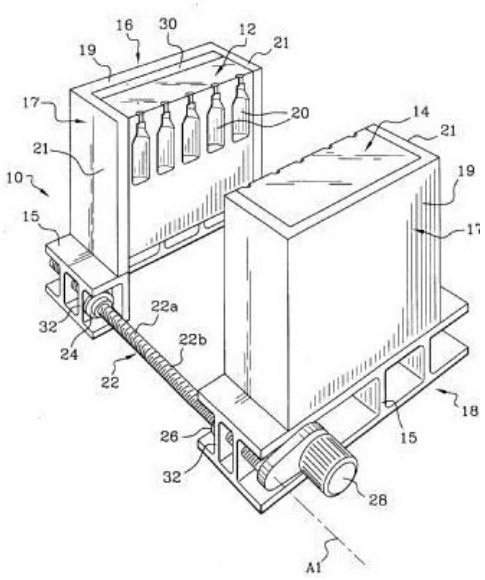

Fluid driven clamping means via channel 25

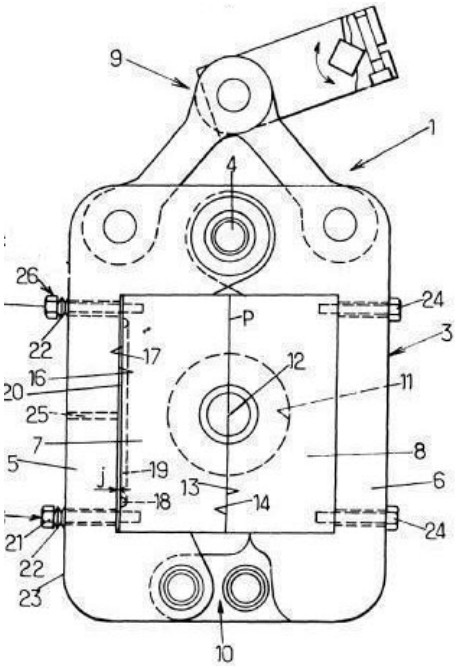

Closing and clamping toggle mechanism

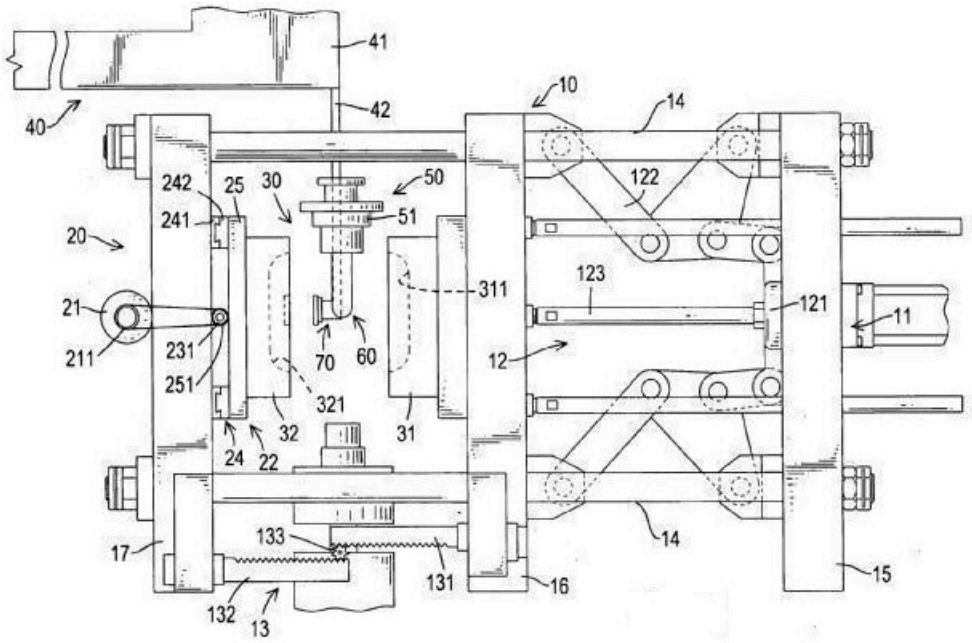

Locking mechanism

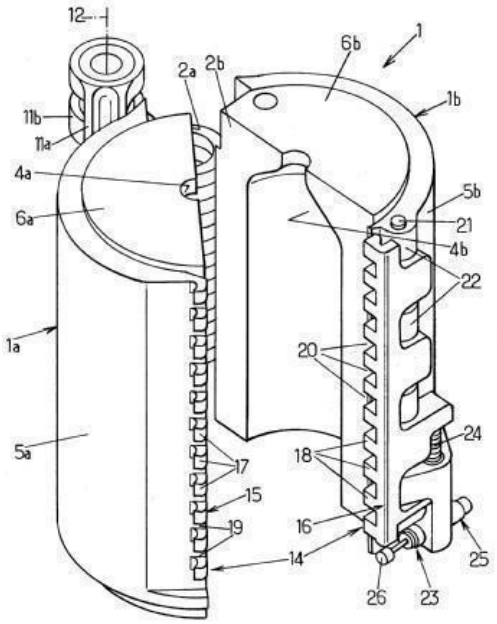

References

Informative references

Attention is drawn to the following places, which may be of interest for search:

Opening, closing or clamping of moulds in general	B29C 33/20 - B29C 33/28

B29C 49/5602

{using cams}

Definition statement

This place covers:

Opening or closing the mould with the use of cams.

B29C 49/5603

{using toggle mechanism}

Definition statement

This place covers:

Opening or closing the mould with the use of a toggle mechanism.

B29C 49/5604

{using spindle nut mechanism}

Definition statement

This place covers:

Opening or closing the mould with the use of a spindle nut mechanism.

B29C 49/5605

{Hydraulically operated, i.e. closing or opening of the mould parts is done by hydraulic means}

Definition statement

This place covers:

Opening or closing the mould hydraulically.

B29C 49/5606

{Pneumatically operated, i.e. closing or opening of the mould parts is done by hydraulic means}

Definition statement

This place covers:

Opening or closing the mould pneumatically.

B29C 49/5607

{Electrically operated, e.g. the closing or opening is done with an electrical motor direct drive}

Definition statement

This place covers:

Opening or closing the mould electrically.

B29C 49/5608

{Asymmetric movement of mould parts, e.g. by moving only one mould part}

Definition statement

This place covers:

Opening or closing the mould by asymmetric movement of the mould parts.

Illustrative example of subject matter classified in this group:

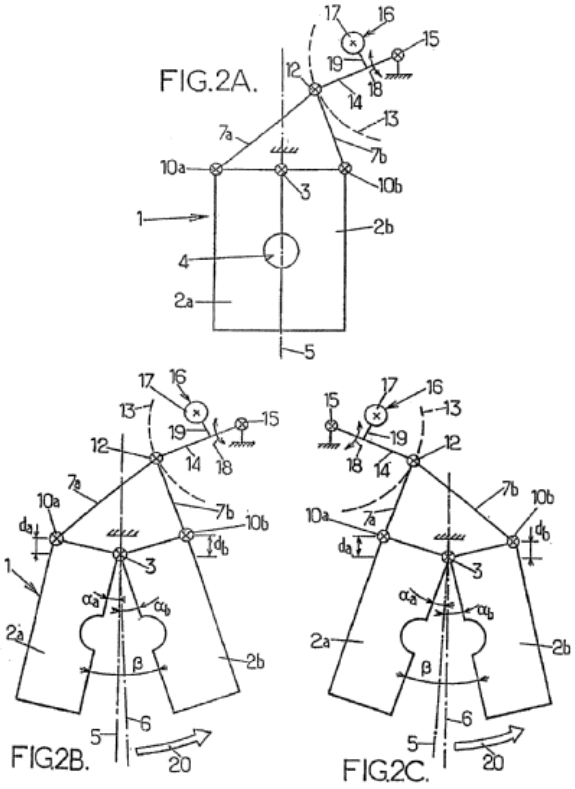

B29C 49/561

{Characterised by speed, e.g. variable opening closing speed}

Definition statement

This place covers:

Opening or closing of the mould is characterised by the opening or closing speed.

B29C 49/5611

{Tilting movement, e.g. changing angle of the mould parts towards the vertical direction}

Definition statement

This place covers:

Opening or closing the mould by tilting movement of a mould part.

B29C 49/5612

{characterised by bottom part movement}

Definition statement

This place covers:

Opening or closing the mould by movement of a bottom portion of the mould.

B29C 49/5613

{characterised by connected mould part movement, e.g. bottom part movement is linked to mould half movement}

Definition statement

This place covers:

Opening or closing the mould by movement of a connected mould part.

Illustrative example of subject matter classified in this group:

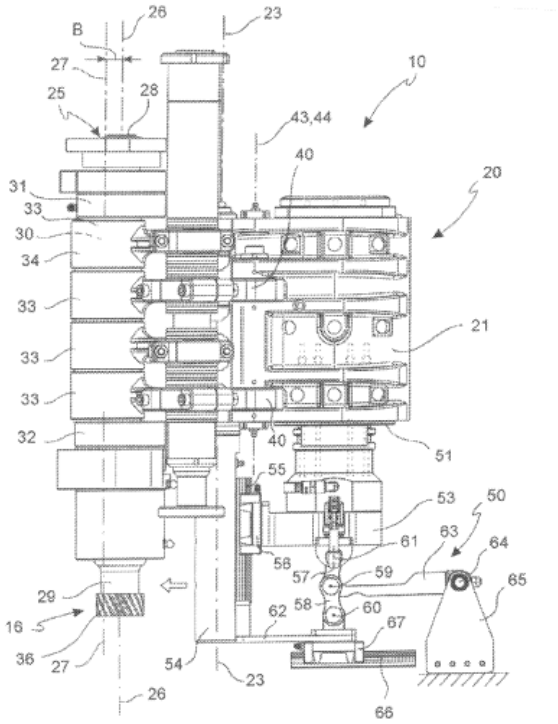

FIG. 6

B29C 49/5614

{Safety means, e.g. during ejection or locking failure}

Definition statement

This place covers:

Safety devices for use during opening or closing of the mould.

B29C 2049/5631

{Hydraulic}

Definition statement

This place covers:

Hydraulically operated clamping means.

B29C 2049/5633

{Pneumatic}

Definition statement

This place covers:

Pneumatically operated clamping means.

B29C 2049/5634

{Electric, e.g. electric motor}

Definition statement

This place covers:

Electrically operated clamping means.

Illustrative example of subject matter classified in this group:

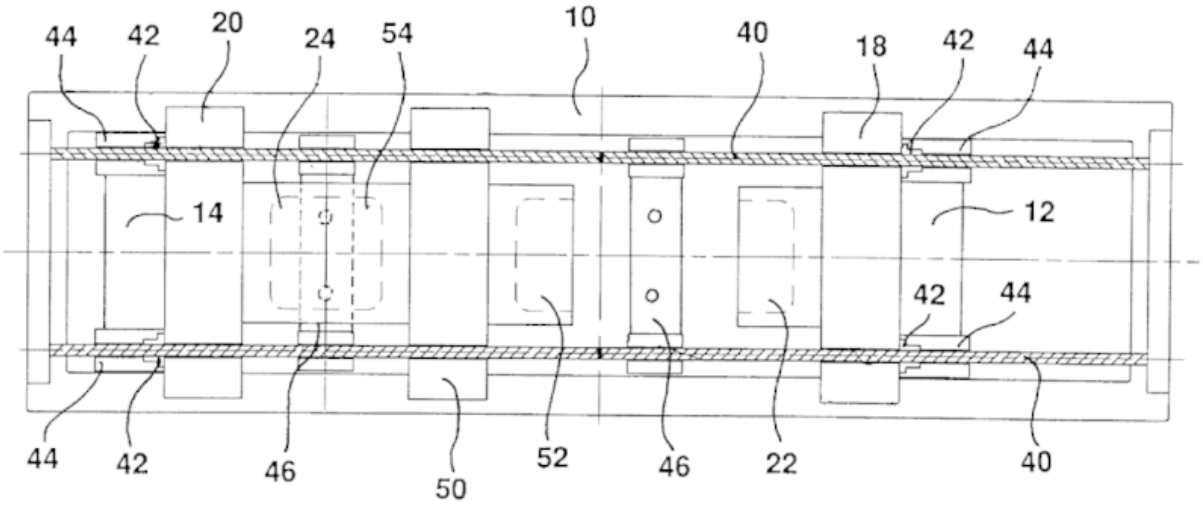

FIG. 2

The machine wherein the coupling means (36) is constructed as a rack, threaded rod (40), link chain, toothed belt, V-belt or corresponding means, and the rotating engagement member is constructed as a toothed wheel, threaded wheel (42) or corresponding turning means, and the motor (38) is constructed as an electrically driven motor (44).

B29C 2049/5635

{Avoiding mould deformation}

Definition statement

This place covers:

Mould apparatus clamping elements which function in a manner that avoids or prevents deforming the mould.

Illustrative example of subject matter classified in this group:

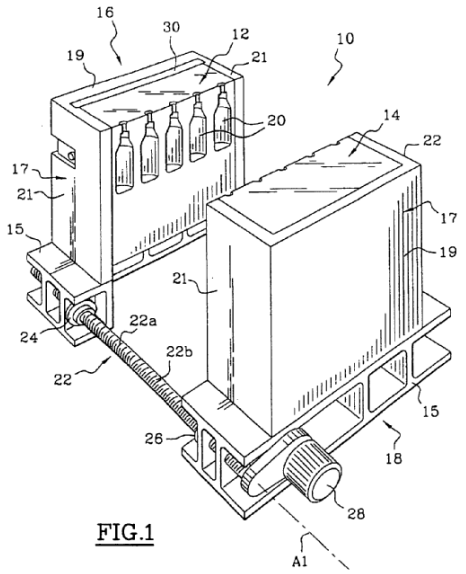

FIG.1

As seen in Figure 1, Element 30 is a cushion which can be inflated such that it projects slightly past the rear face of the mould-half, at least on three sides. Thus, by inflating the cushion 30 with a fluid at a pressure substantially equal to or greater than that of the blow-moulding fluid, the resulting action of these two fluids on the mould-half is an action that pushes toward the other mould-half 14.

In the extrusion-blow-moulding process, pressures on the order of 10 bars are generally used. Also, when the mould has a large cavity or several cavities, the forces exerted by the fluid pressures can be quite large. However, the use of a flexible cushion makes it possible to ensure that the compensating pressure is distributed uniformly over the entire rear face of the mould-half. In this way, the force of the first mould-half 12 applied against the second 14 is uniformly distributed over the entire joint plane of the mould, without the need to use particularly rigid mould-halves or mould clamping units, which allows costs to be decreased.

B29C 2049/5636

{using closing means as clamping means}

Definition statement

This place covers:

A mould closing feature which also functions as the mould clamping feature.

Illustrative example of subject matter classified in this group:

To close the blow-mould and to hold it closed with a high force for a blow-moulding process, the electric motor is activated to drive the push mechanism. The push mechanism, preferably designed as a spindle drive, moves the push rod out of the push mechanism and the electric motor reaches

the required torque. Directly after the blow-mould has been closed with high force by an elastic deformation, the braking device is activated to hold the push rod in a state of constantly maintained tension in its instantaneous position and to hold the blowing mould closed with a required closing force.

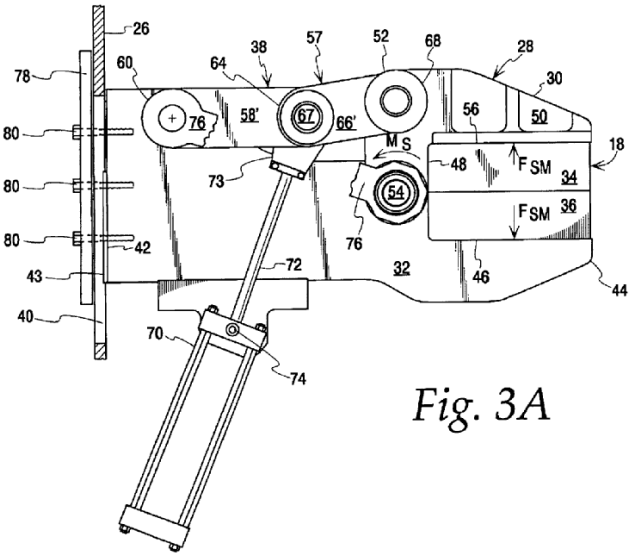

Fig. 3A

B29C 2049/5661

{Mechanical}

Definition statement

This place covers:

A mould locking element which is operated mechanically.

Illustrative example of subject matter classified in this group:

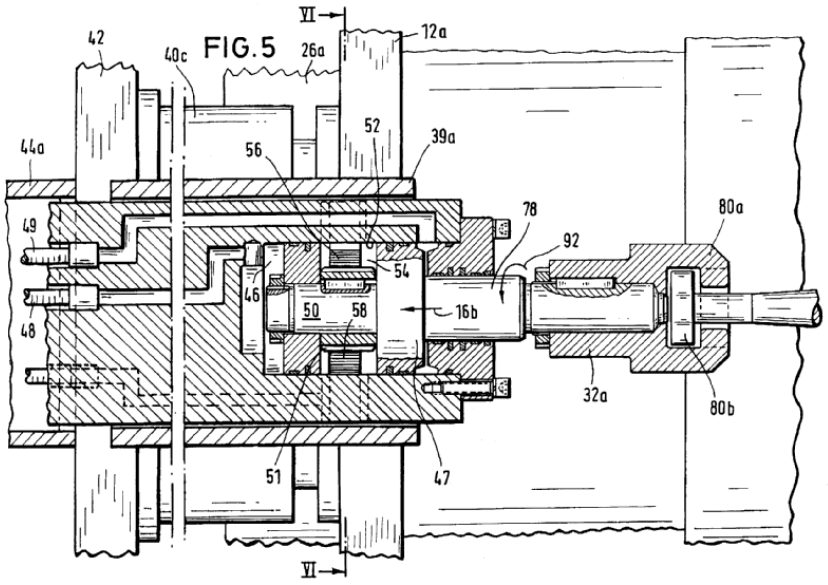

The cross-section of the coupling member 80b which is to be introduced into and co-operate with the receiving coupling member 80a is so adapted to the cross-sectional shape of the opening in the receiving coupling member 80a so that, when the receiving coupling member 80a is in the appropriate angular position, the coupling member 80b can be introduced into the coupling member 80a through

the opening therein, in the course of the mould-closing movement. Thereafter, the receiving coupling member 80a is rotated about its longitudinal axis or about the longitudinal axis of the locking portion, thus providing a positively locking connection between the two coupling members. That position is shown in FIG. 5.

B29C 2049/5662

{Latch}

Definition statement

This place covers:

A mould locking element which includes a mechanically-operated latch feature.

Illustrative example of subject matter classified in this group:

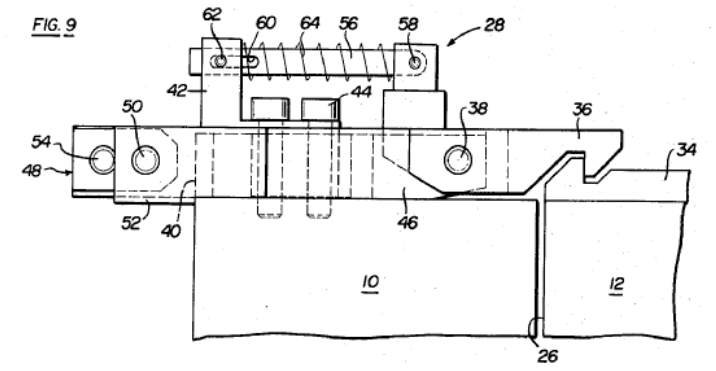

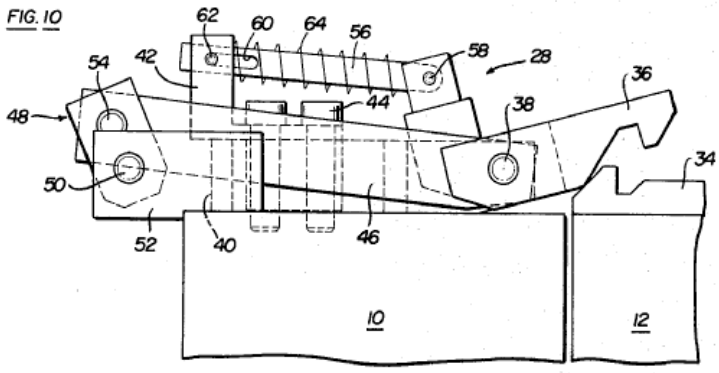

B29C 2049/5663

{Rotating locking pin}

Definition statement

This place covers:

A mould locking element which is a mechanically-operated rotating pin.

Illustrative example of subject matter classified in this group:

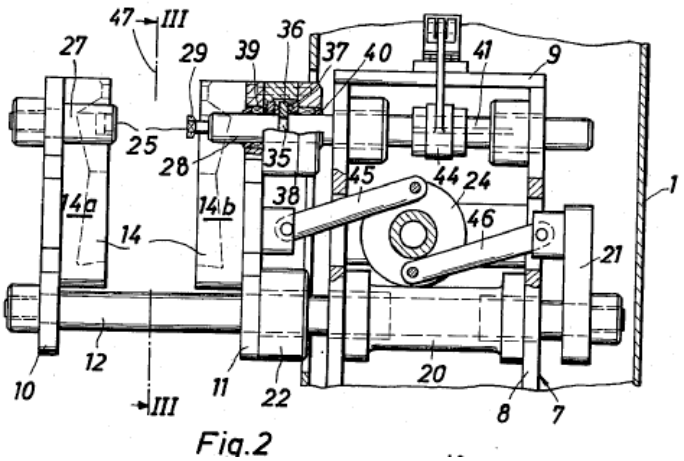

Fig.2

Locking mechanism 25 is actuated by piston and cylinder unit as soon as mould platens 10, 11 are butted to each other and hollow mould 14 is closed. Since locking bush 27 is firmly screwed to mould platen 10 and locking rod 28 is rotatable in mould platen 11 but axially fixed relative thereto, with platens 10, 11 abutting, lock head 29 penetrates into opening 31 of locking bush 27, the mechanism being adjusted so as to always insure an alignment of lock head 29 with opening 31.

B29C 2049/5664

{Translating locking pin}

Definition statement

This place covers:

A mould locking element which is a mechanically-operated translating pin.

Illustrative example of subject matter classified in this group:

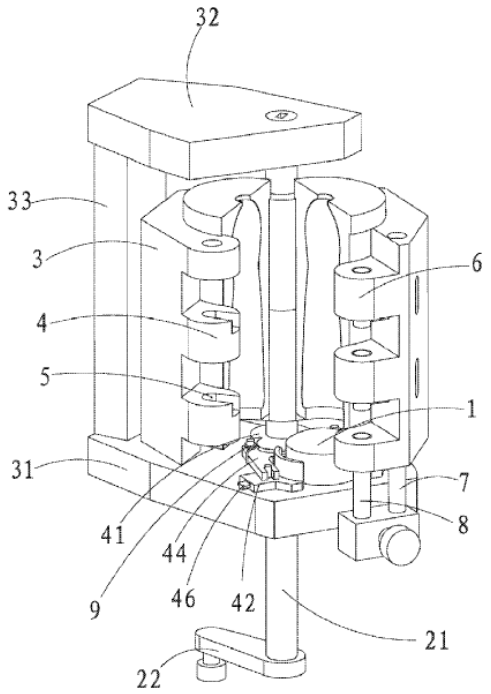

fig. 2

See reference sign 8

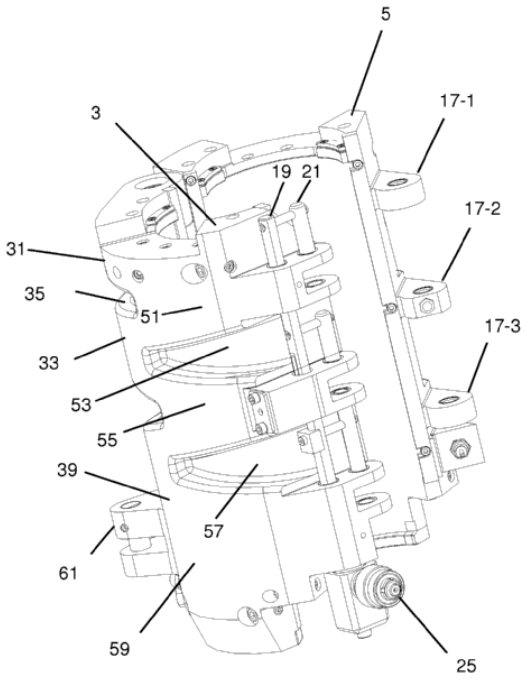

Figure 4

See reference sign 21

B29C 2049/5665

{Magnetic}

Definition statement

This place covers:

A mould locking element which is magnetically operated.

Illustrative example of subject matter classified in this group:

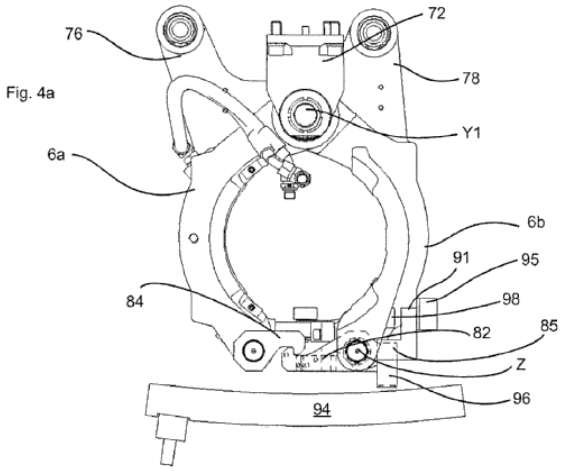

This figure shows a corresponding closed state of the blow-moulding station, i.e. a state in which the first locking element 82 engages in the second locking element 84. The reference number 95 designates a holding magnet which cooperates with a magnetizable element 91, which is likewise arranged in a fixed manner on the locking element 82, and in this way holds the first locking element in the locking position with a pre-set magnetic force. This holding magnet 95 thus constitutes the second magnetic element.

B29C 2049/5666

{Pneumatic}

Definition statement

This place covers:

A mould locking element which is pneumatically operated.

Illustrative example of subject matter classified in this group:

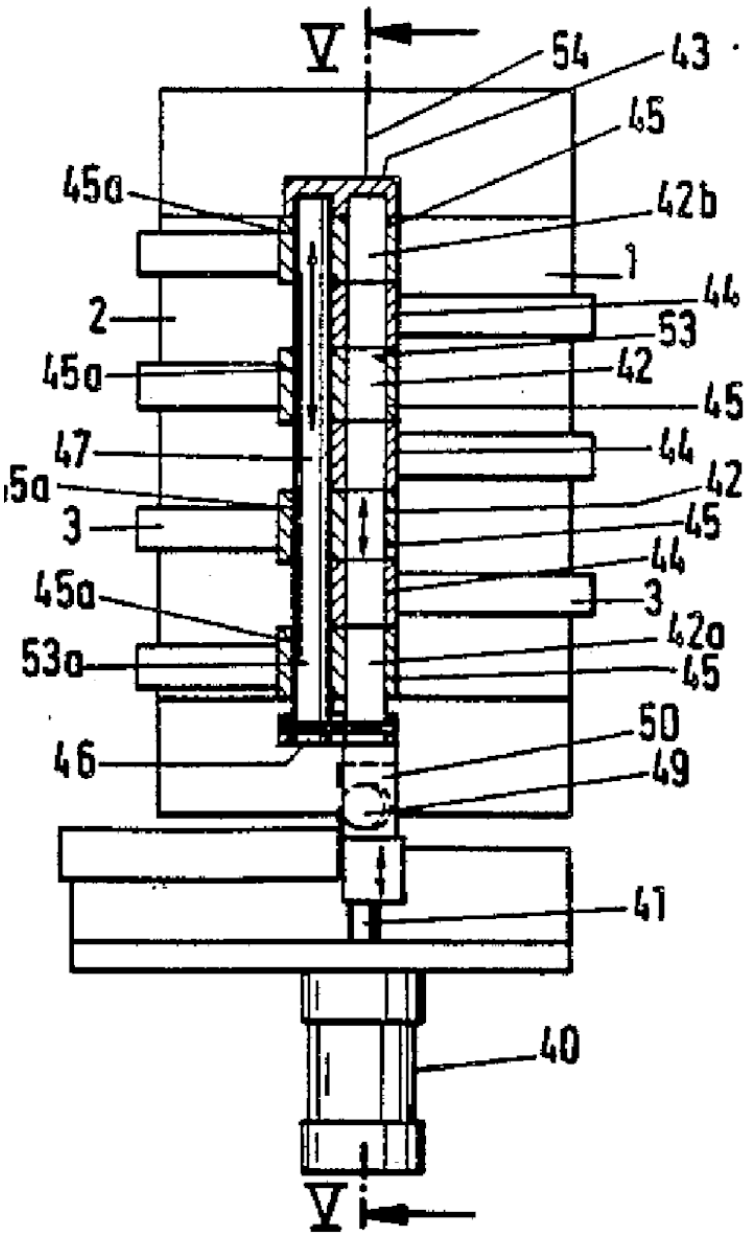

The locking and unlocking of the mould halves when the mould is in its closed state is effected utilising a locking arrangement which will be described. The locking arrangement comprises a pneumatic piston and cylinder arrangement 40. The piston rod 41 of the arrangement 40, when moved upwardly, engages with the underside of the lowermost locking section 42a of a series of end-abutting locking members 42 which are in the form of locking bars. The mould halves 1 and 2 are provided with clamps 3.

B29C 49/58

Blowing means

Definition statement

This place covers:

Illustrative example of subject matter classified in this group:

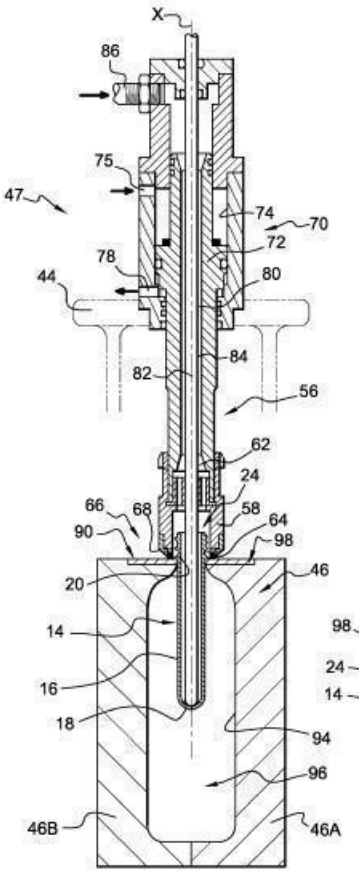

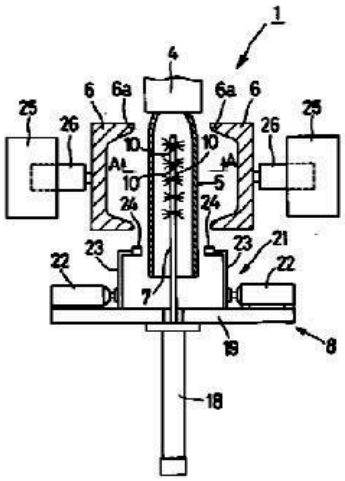

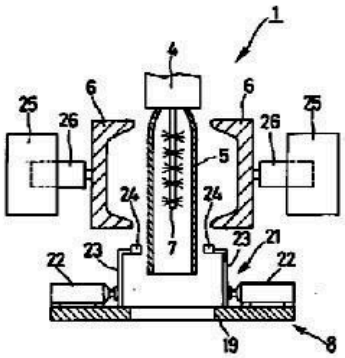

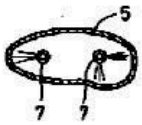

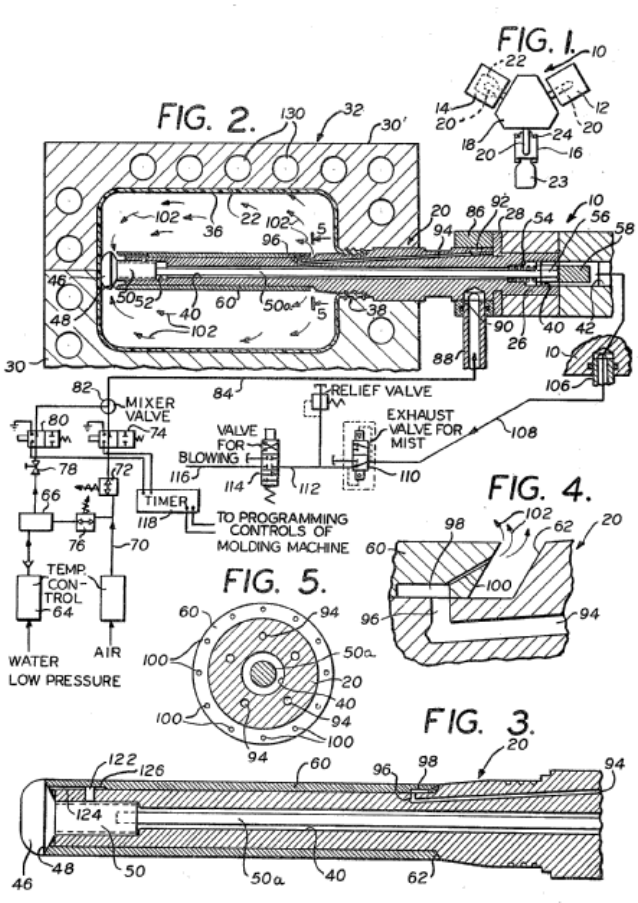

Synonyms and Keywords

In patent documents, the following words/expressions are often used as synonyms:

- "blowing means", "blow pin", "blowing nozzle" and "blowing mandrel"

B29C 2049/5898

{Regulation of the blowing means clamp force}

Definition statement

This place covers:

Control of the force of the attachment, or clamp applied, between the blowing element and the preform/parison.

Illustrative example of subject matter classified in this group:

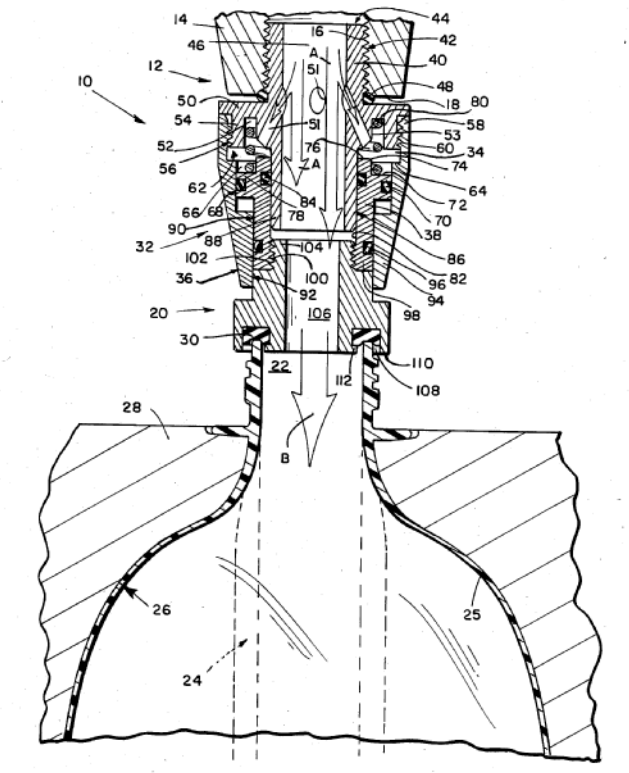

After the seal 30 has contacted the upper lip of the parison 24 and the piston 38 moved upward against the biasing force of spring 80, a gaseous blowing medium, typically air, is quickly injected through outlet 14 and into axial passageway 46. The downwardly angled ports 51 extending from the axial passageway 46 through the inner wall 53 of chamber 34 causes a quick increase in pressure within the chamber 34. This increase in pressure within chamber 34 exerts a force on the annular pressure surface 72 of piston 38 causing it to press downwardly to ensure a complete and full seal by the sealing means 30 on the upper lip of opening 22.

B29C 49/60

Blow-needles

Definition statement

This place covers:

Illustrative example of subject matter classified in this group:

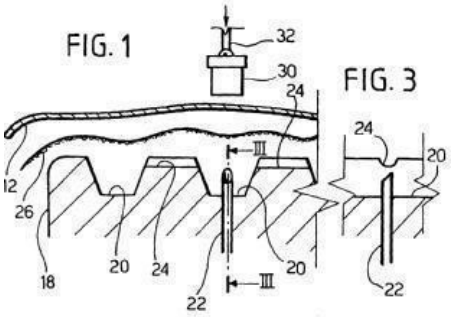

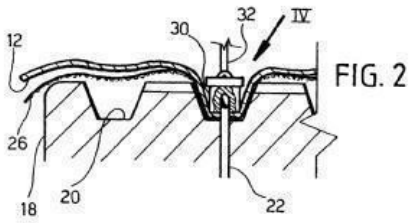

FIG. 2

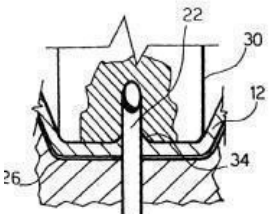

FIG. 4

Support 30 facilitates the piercing of the parison

Retractable blow needle, the blow needle has special blow openings

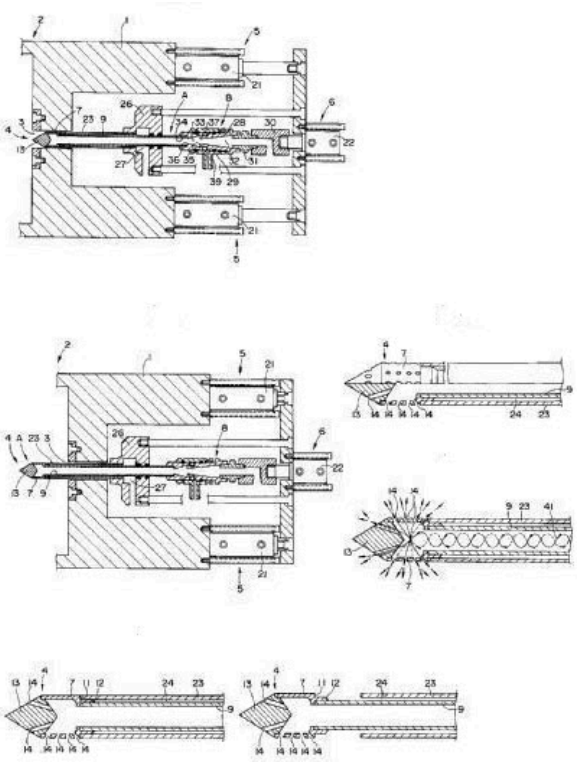

Blow needle has special means to facilitate the piercing

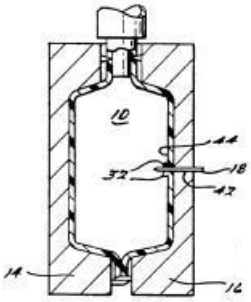

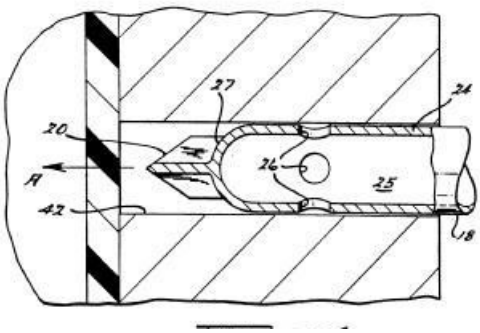

B29C 2049/6091

{Avoiding needle marks, e.g. insertion in sprue}

Definition statement

This place covers:

Blow needle placement such that any needle marks are avoided. This could include needle insertion in a sprue or other area apart from the article.

Illustrative example of subject matter classified in this group:

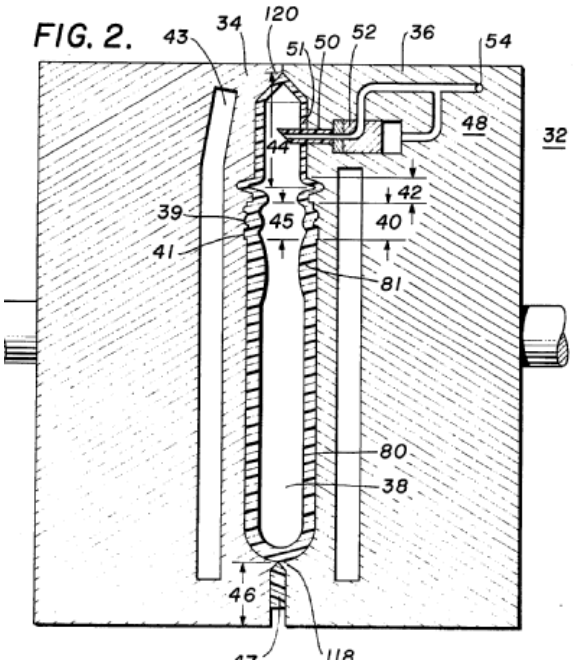

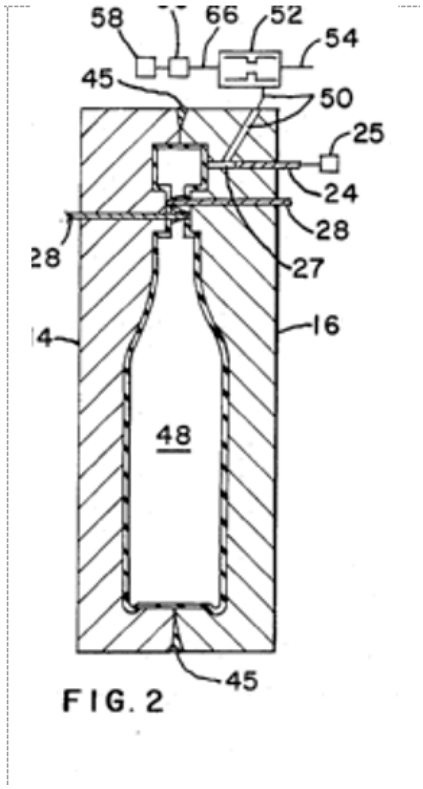

B29C 2049/6092

{Blow needle sterilization}

Definition statement

This place covers:

Processes or apparatus which include sterilizing the blowing needle.

Illustrative example of subject matter classified in this group:

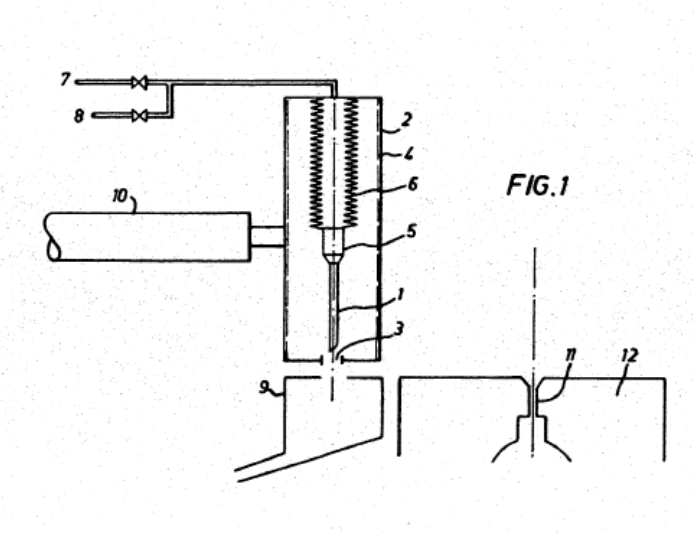

FIG.1

An apparatus including an element for passing steam through said needle in the sterilization position before the sterile gas is passed through the needle. In operation, the needle 1 is retracted into chamber 2 and is initially connected to the steam system 8 in the position shown in FIG. 1 so as to sterilize the entire blowing circuit.

B29C 49/62

Venting means

Definition statement

This place covers:

Illustrative example of subject matter classified in this group:

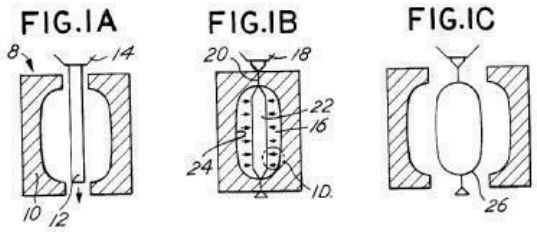

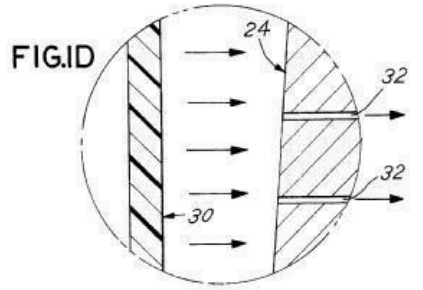

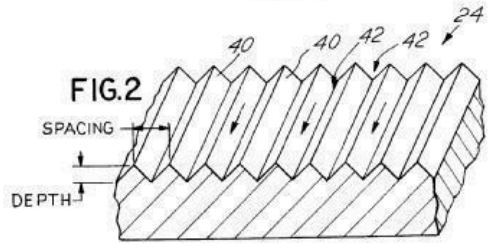

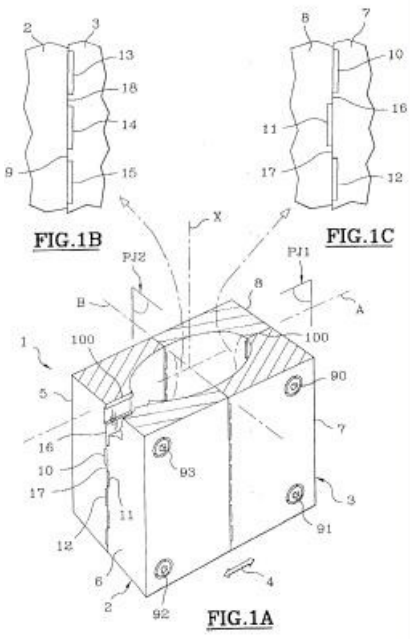

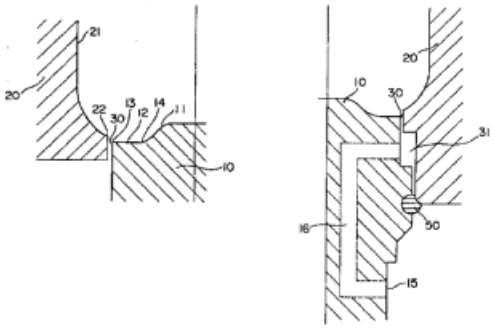

References

Informative references

Attention is drawn to the following places, which may be of interest for search:

Venting means for moulds in general:	B29C 33/10

B29C 2049/6271

{for venting blowing medium, e.g. using damper or silencer}

Definition statement

This place covers:

Mould venting element which vents the blowing means, possibly including use of a damper or silencer.

Illustrative example of subject matter classified in this group:

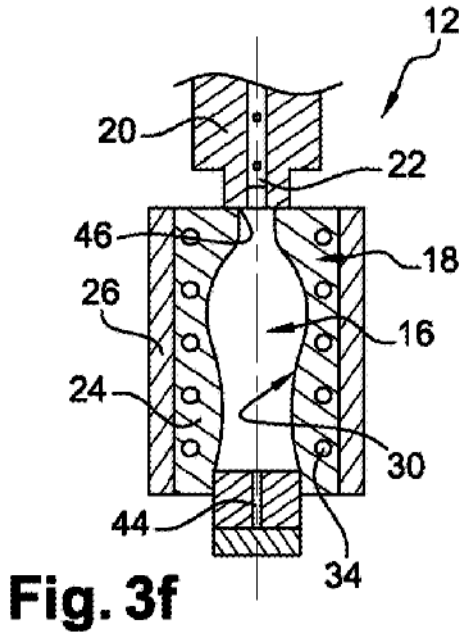

Fig. 3f

As illustrated in FIG. 3f, during and after the step for cooling the mould 18, the cooling fluid—when it is formed by the compressed air escapes through said opening 46 to be evacuated through an exhaust device (not shown) that the blow-moulding means 20 comprise and that commonly comprises a sound suppressor. Noise linked to the expansion of compressed air and then to its evacuation is thus limited.

Advantageously, the evacuation of the cooling air from the mould 18 through such a sound suppressor makes it possible to control the pressure inside the moulding cavity 16, which makes it possible to raise the blow-moulding means 20 to the upper position and then to open again the moulding unit 12.

B29C 2049/6272

{using vacuum means}

Definition statement

This place covers:

Mould venting element which vents the blowing means using vacuum pressure.

Illustrative example of subject matter classified in this group:

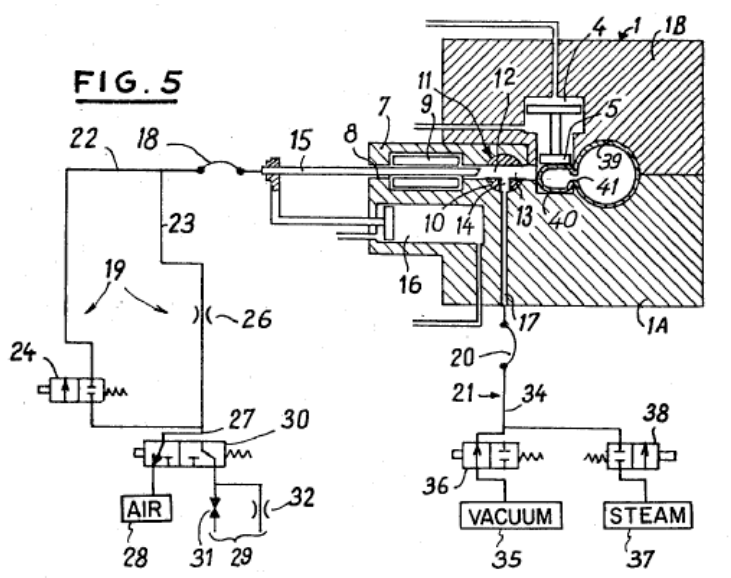

After blowing the receptacle, the supply of high pressure sterile air is interrupted by switching distributor 30. The pressurized sterile blowing air in the receptacle is then evacuated through distributor 24 and valve 31. After evacuation distributor 24 is closed, the needle is withdrawn from the mould cavity by jack 16, distributor 30 is reversed and distributor 36 is opened. The coupling of the vacuum source 35 ensures complete evacuation.

B29C 49/64

Heating or cooling preforms, parisons or blown articles

References

Informative references

Attention is drawn to the following places, which may be of interest for search:

Heating, cooling or curing in general	B29C 35/00
Cooling of preforms after an injection moulding process, said cooled preforms being used in a following blow-moulding process	B29C 45/7207
Heating of preforms in general	B29B 13/023

Synonyms and Keywords

In patent documents, the following words/expressions are often used as synonyms:

- "glass transition temperature", "Tg" and "vitreous transition temperature"

B29C 49/6409

{Thermal conditioning of preforms (B29C 49/68 takes precedence)}

Definition statement

This place covers:

Heating and cooling preforms before the blow-moulding operation.

References

Limiting references

This place does not cover:

Ovens specially adapted for heating preforms or parisons	B29C 49/68

B29C 49/6418

{Heating of preforms}

Definition statement

This place covers:

Heating cold preforms in one continuous uninterrupted heating phase.

Illustrative example of subject matter classified in this group:

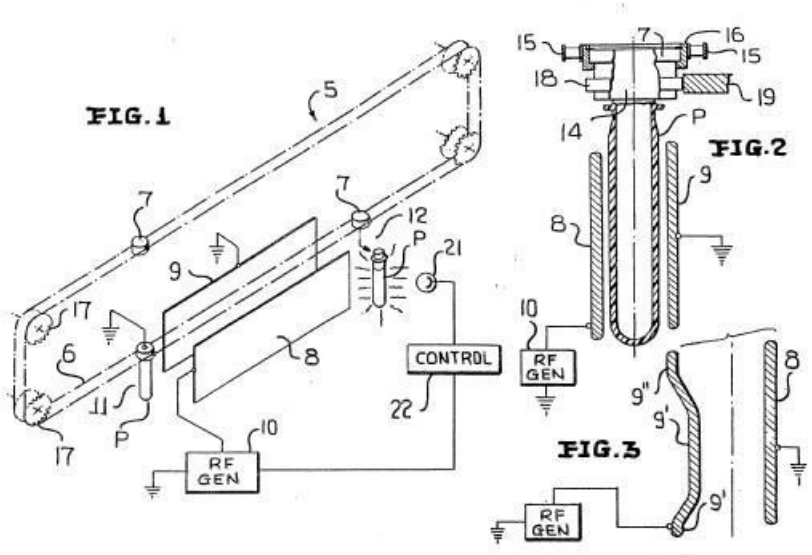

Row of preforms are transported through a heating oven

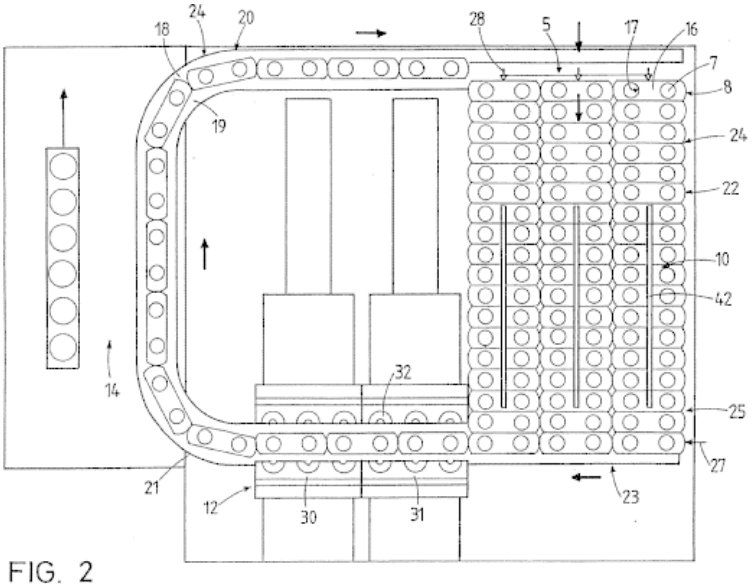

FIG. 2

B29C 49/6419

{from the inside}

Definition statement

This place covers:

Heating the preforms from the inside using media such as hot air or interior heating element.

Illustrative example of subject matter classified in this group:

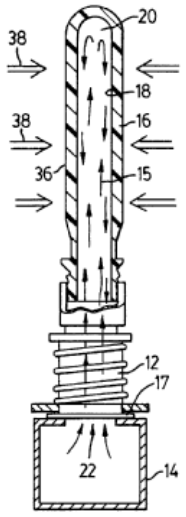

FIG. 4

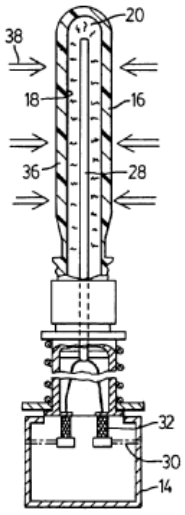

FIG. 5

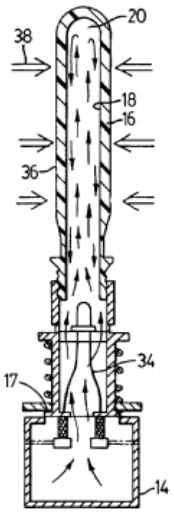

FIG. 6

B29C 49/64195

{Heated by the mould}

Definition statement

This place covers:

Heating the preforms via a heated mould.

B29C 49/642

{and shrinking of the preform}

Definition statement

This place covers:

Heating preforms to shrink them into an intermediate product.

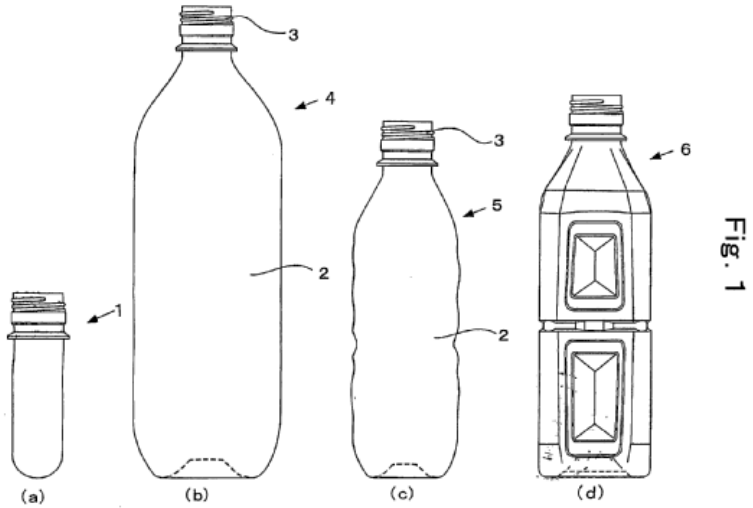

Fig. 1

B29C 49/6427

{Cooling of preforms}

Definition statement

This place covers:

Cooling hot or molten preforms in one continuous uninterrupted cooling phase (mainly for injection moulded preforms who do not have the correct blow-moulding temperature yet).

Illustrative example of subject matter classified in this group:

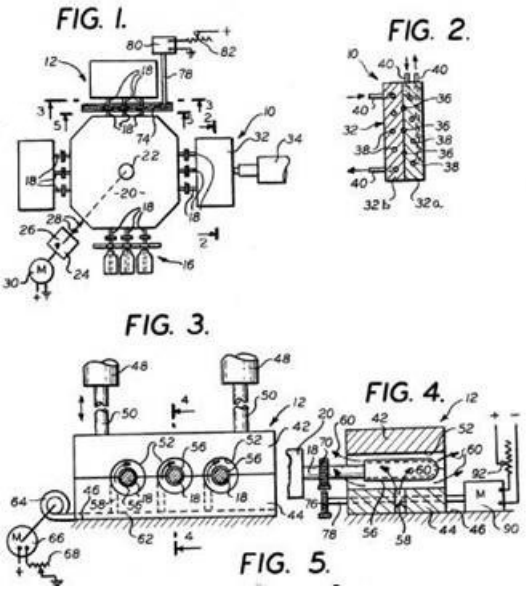

B29C 49/643

{from the inside}

Definition statement

This place covers:

Cooling preforms from the inside using media such as cool air or fluid.

Illustrative example of subject matter classified in this group:

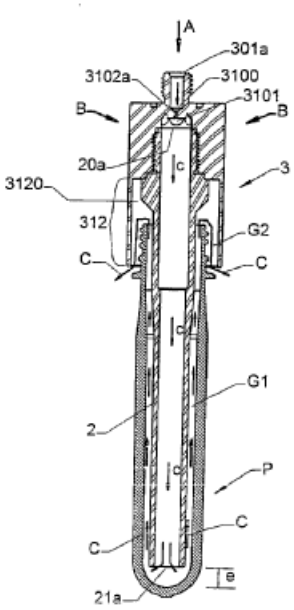

FIG.2

B29C 49/6435

{from the outside}

Definition statement

This place covers:

Cooling preforms from the outside using media cool air or fluid in mould channels.

Illustrative example of subject matter classified in this group:

FIG. 5

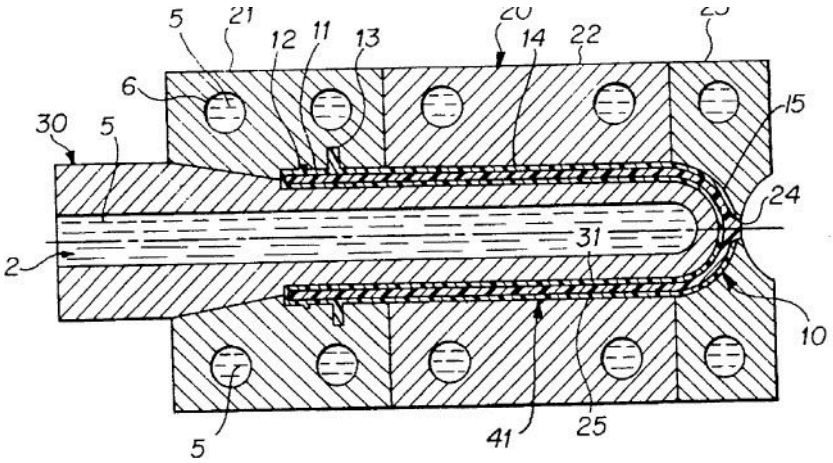

B29C 49/6436

{characterised by temperature differential}

Definition statement

This place covers:

Illustrative example of subject matter classified in this group:

FIG.3A.

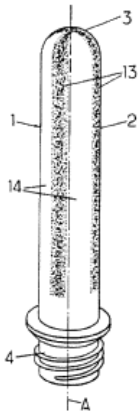

FIG.3B.

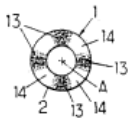

FIG.4.

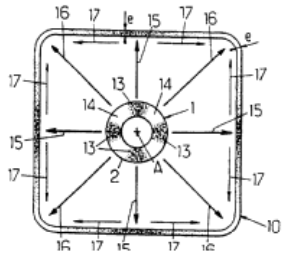

B29C 49/6445

{through the preform length}

Definition statement

This place covers:

Illustrative example of subject matter classified in this group:

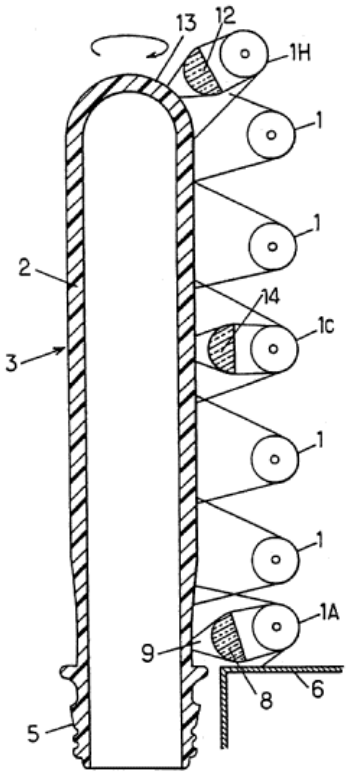

B29C 49/645

{by cooling the neck}

Definition statement

This place covers:

Cooling preform neck region.

Illustrative example of subject matter classified in this group:

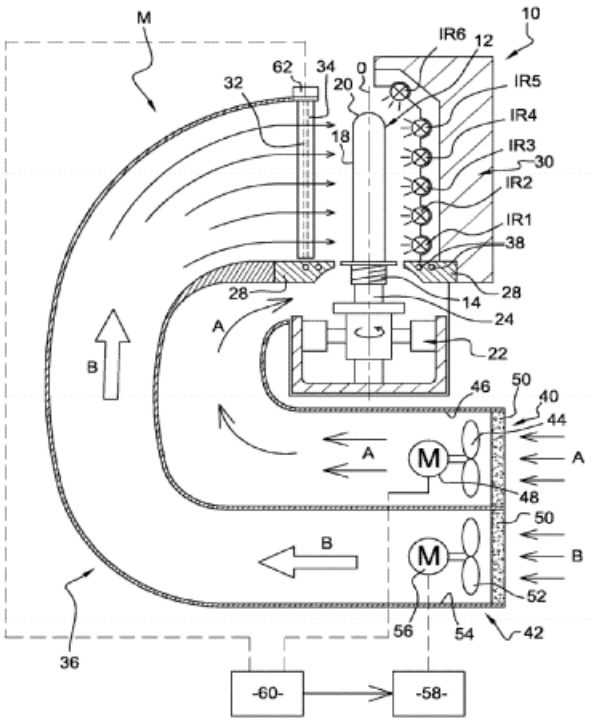

Fig. 2

B29C 49/6452

{by heating the neck}

Definition statement

This place covers:

Heating preform neck region.

Illustrative example of subject matter classified in this group:

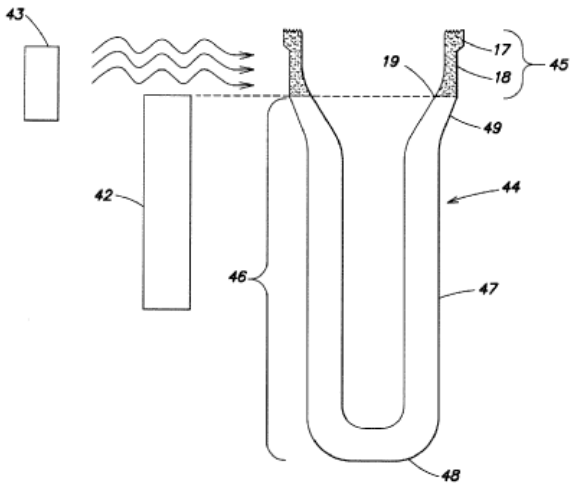

FIG. 4

B29C 49/6454

{through the preform thickness}

Definition statement

This place covers:

Illustrative example of subject matter classified in this group:

Heating apparatus or method that creates a desired temperature profile through a preform.

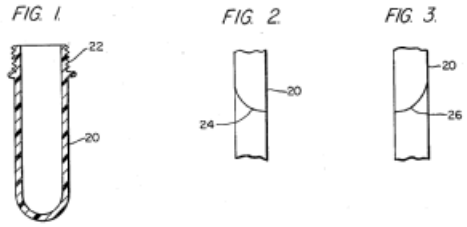

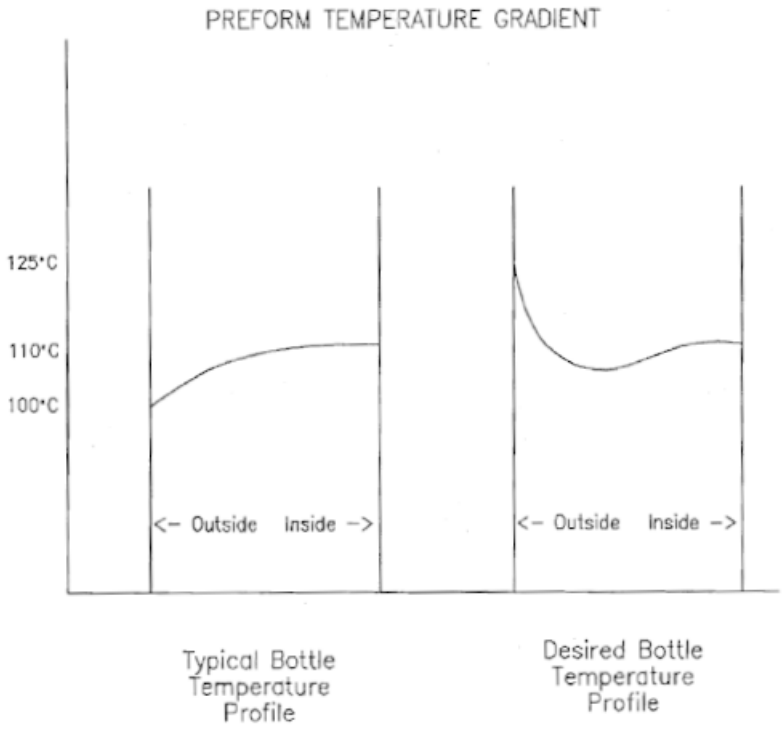

B29C 49/6458

{tangentially, i.e. along circumference}

Definition statement

This place covers:

Heating system/process for preforms such that there is a difference in temperature through the circumference of the preform, e.g. one radial location of the preform would be heated to a temperature that would differ from a temperature of second radial location.

Illustrative example of subject matter classified in this group:

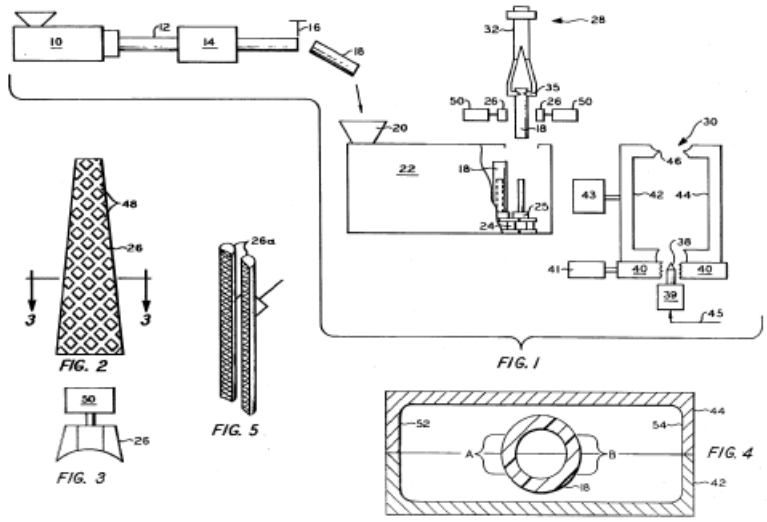

B29C 49/6462

{by masking}

Definition statement

This place covers:

Heating including providing a heat shield of some sort which protects desired sections of the preform during heating, e.g. a handle or neck.

Illustrative example of subject matter classified in this group:

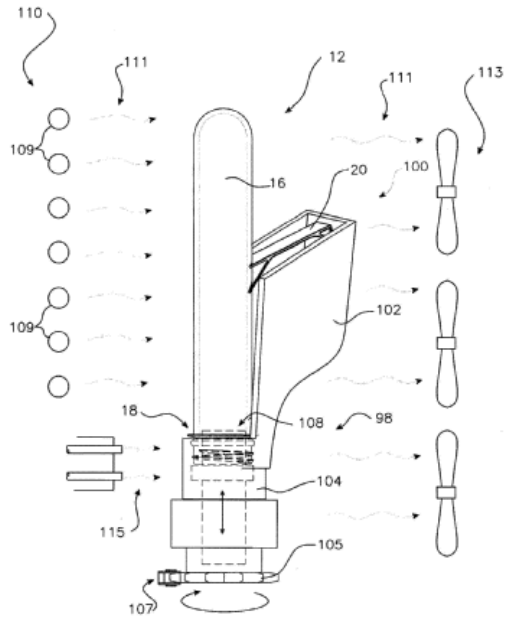

B29C 49/6463

{by contact heating or cooling, e.g. mandrels or cores specially adapted for heating or cooling preforms}

Definition statement

This place covers:

Illustrative example of subject matter classified in this group:

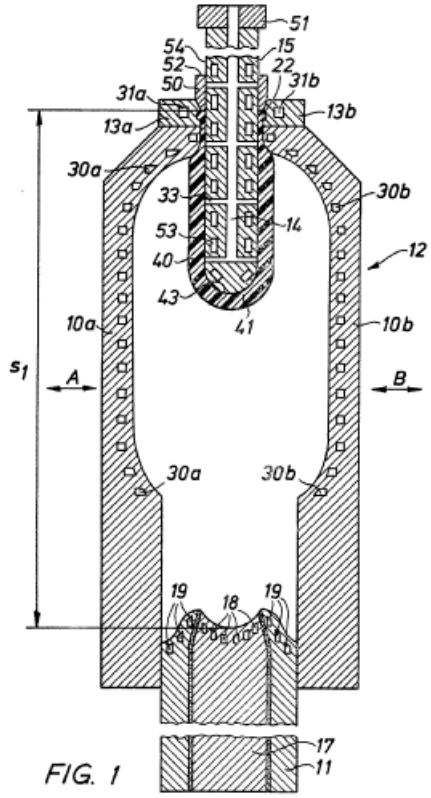

FIG. 1

B29C 49/6464

{Heating}

Definition statement

This place covers:

Heating a preform including using an element which is adapted to engage in contact with a surface of the preform to transfer heat thereto.

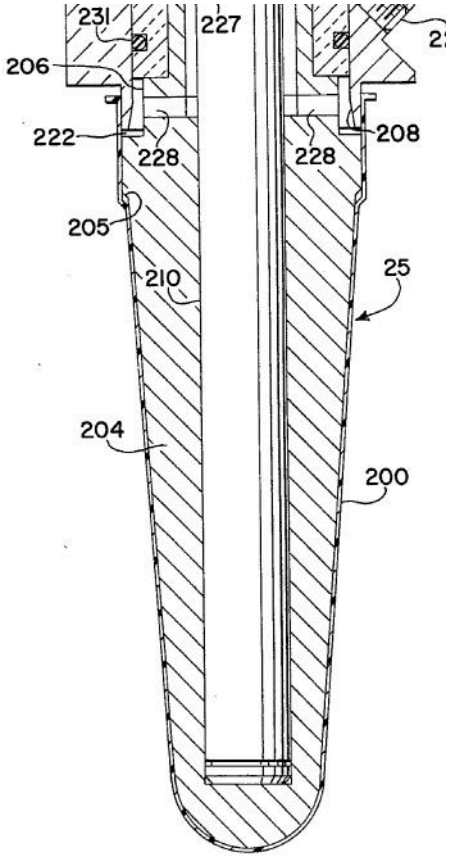

B29C 49/6465

{Cooling}

Definition statement

This place covers:

Cooling preforms including maintaining contact of a surface of the preform with interior corresponding surface of a cooling sleeve.

Illustrative example of subject matter classified in this group:

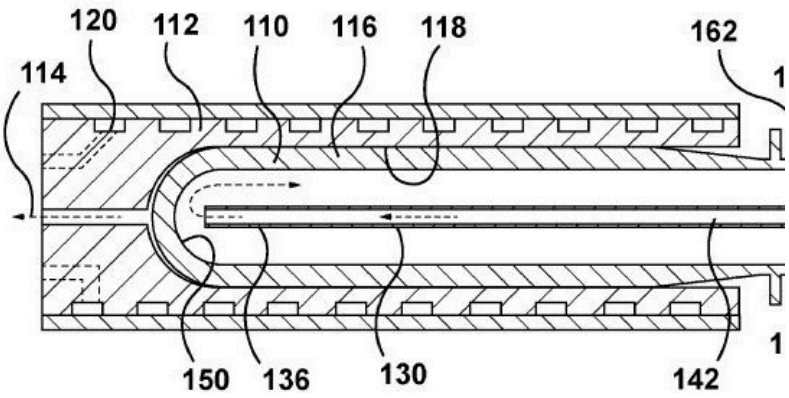

B29C 49/6466

{on the inside}

Definition statement

This place covers:

Temperature conditioning of preforms via contact on the preform interior with a heating or cooling mandrel.

Illustrative example of subject matter classified in this group:

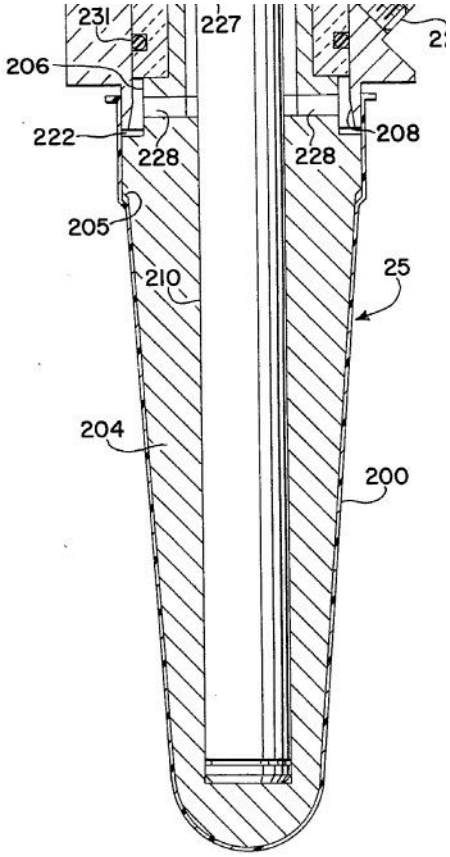

B29C 49/6467

{on the outside}

Definition statement

This place covers:

Temperature conditioning of preforms via contact on the preform exterior with a corresponding heating or cooling element.

B29C 49/6472

{in several stages}

Definition statement

This place covers:

- Discontinuous heating having at least one additional phase where the preform is not heated, or even shortly cooled before the next heating phases starts

- DE3908219

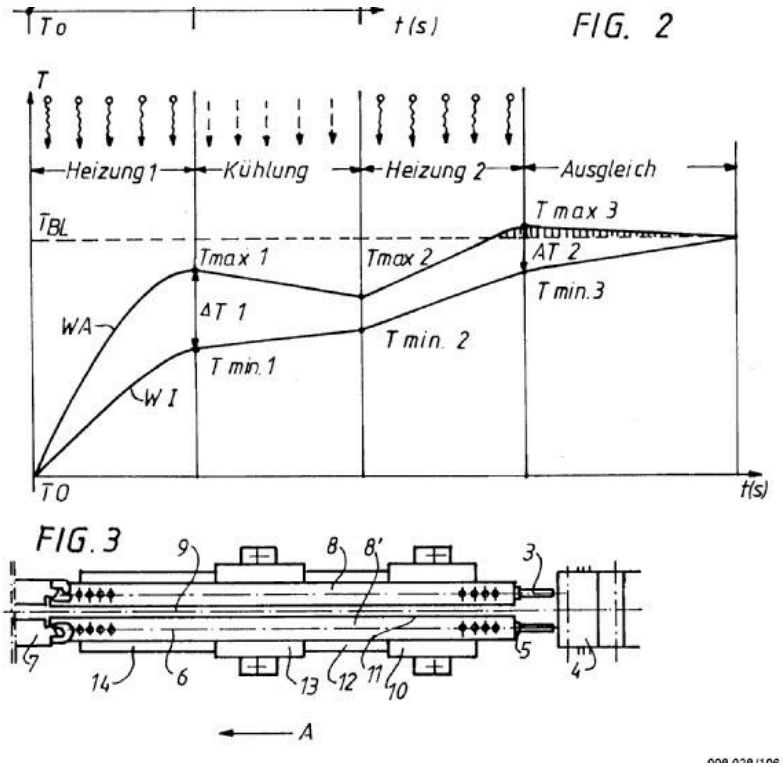

B29C 49/648

{of preforms or parisons}

Definition statement

This place covers:

Temperature control/adjustment of preforms in parisons which occurs throughout more than one stage or process.

Illustrative example of subject matter classified in this group:

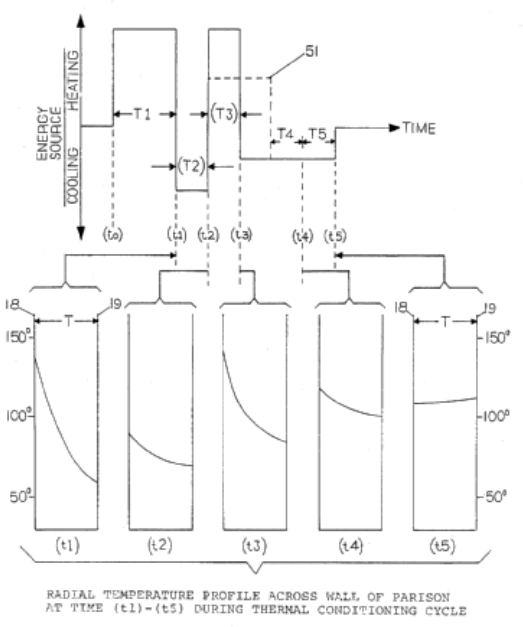

FIG. 5

B29C 49/66

Cooling by refrigerant introduced into the blown article

Definition statement

This place covers:

- JP56013141

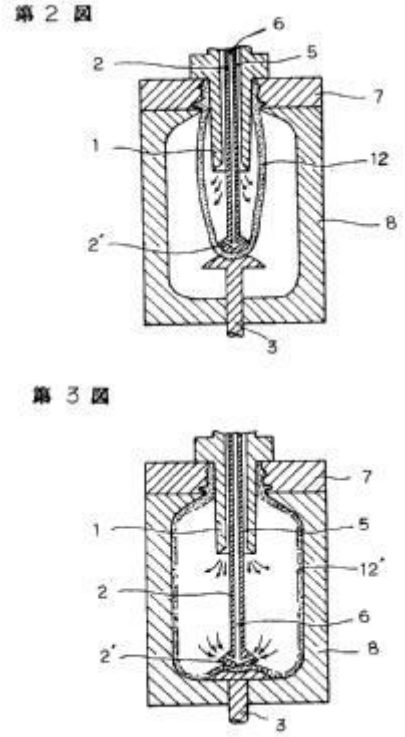

- EP1314535

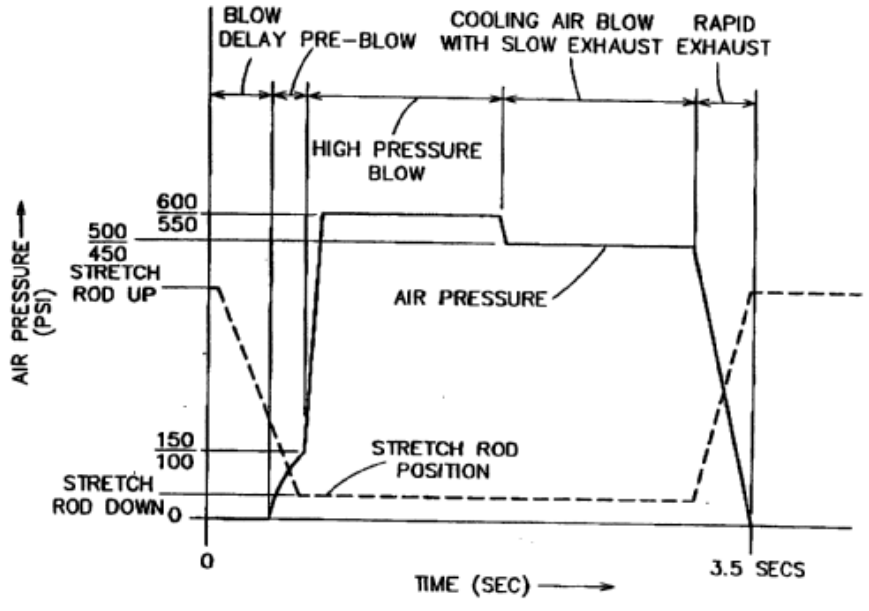

FIG. 2

B29C 49/6605

{Heating the article, e.g. for hot fill}

Definition statement

This place covers:

Heating the article after a moulding step, e.g. in preparation for hot fill or post-processing steps.

B29C 49/66055

{using special pressurizing during the heating, e.g. in order to control the shrinking}

Definition statement

This place covers:

Heating a blow-moulded article including controlling the pressure during heating, which could function to avoid shrinkage or to induce particular article features.

B29C 2049/6606

{Cooling the article}

Definition statement

This place covers:

Cooling a blow-moulded article, e.g. using a water bath or spray, cooled air, refrigerated cabinet.

B29C 2049/671

{Conditioning the blown article outside the mould, e.g. while transporting it out of the mould}

Definition statement

This place covers:

Thermally conditioning a blow-moulded article including affecting its temperature outside of the mould during transport or further processing.

B29C 49/68

Ovens specially adapted for heating preforms or parisons

Definition statement

This place covers:

the heating device (oven) functioning as a whole

Special rules of classification

Details of ovens specially adapted for heating preforms or parisons are classified in B29C 49/64

B29C 49/681

{using a conditioning receptacle, e.g. a cavity, e.g. having heated or cooled regions}

Definition statement

This place covers:

An oven which includes a cavity designed to receive and heat a preform/parison. Such a cavity could also have locations which are designed to cool or not heat specific locations of the preform/parison.

Illustrative example of subject matter classified in this group:

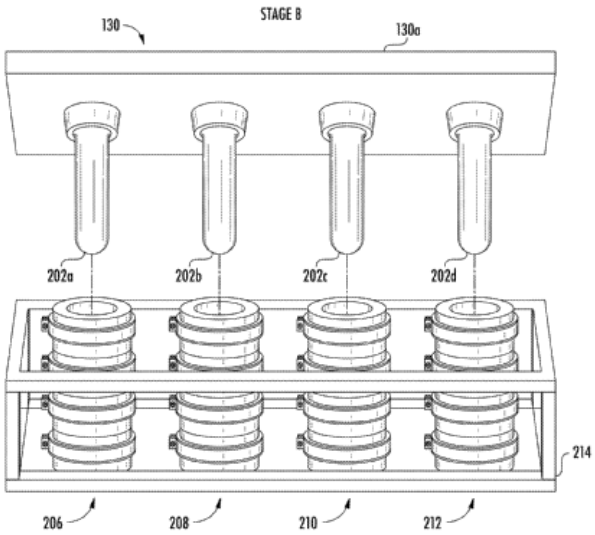

FIG. 6A

B29C 49/682

{characterised by the path, e.g. sinusoidal path}

Definition statement

This place covers:

An oven designed to thermally condition preforms/parisons which includes a distinctive conveyance path for such thermal conditioning, e.g. sinusoidal.

Illustrative example of subject matter classified in this group:

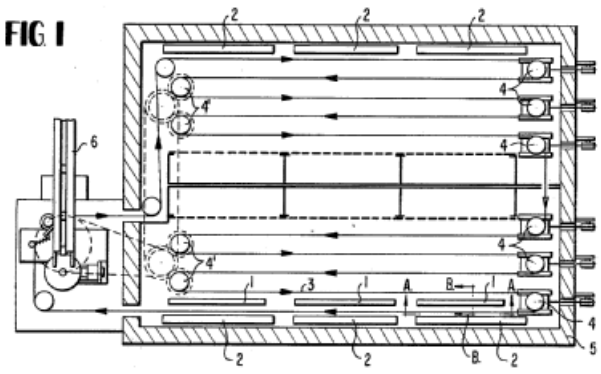

FIG. 1

B29C 49/6825

{Mounting exchanging or centering ovens or parts thereof}

Definition statement

This place covers:

An oven designed to thermally condition preforms/parisons which includes elements which are exchangeable, and the process of mounting, exchanging, or centering the oven parts.

Illustrative example of subject matter classified in this group:

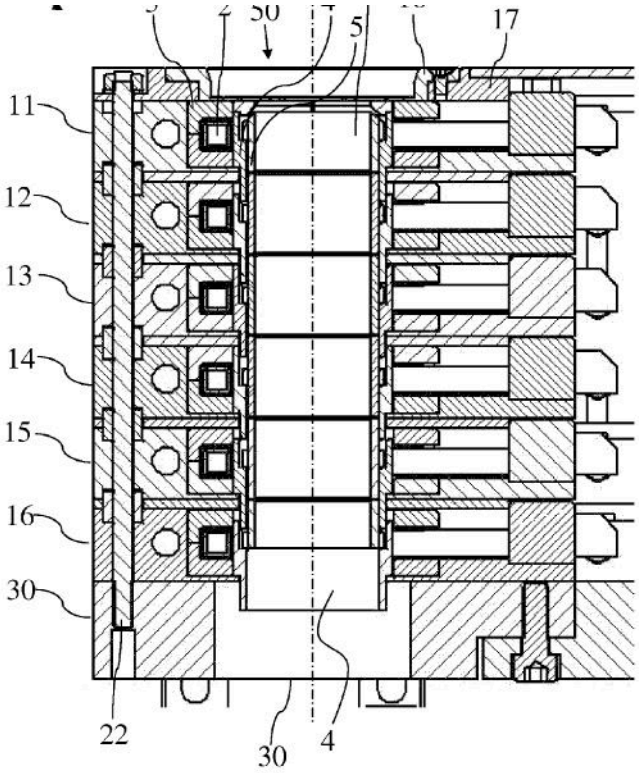

Heating modules which are exchangeable or interchangeable (elements 11-16 in Figure).

B29C 49/683

{Adjustable or modular conditioning means, e.g. position and number of heating elements}

Definition statement

This place covers:

An oven designed to thermally condition preforms/parisons which includes elements which are adjustable in quantity, position, or other ways.

B29C 49/6835

{using reflectors}

Definition statement

This place covers:

An oven designed to thermally condition preforms/parisons which includes elements which are reflective.

Illustrative example of subject matter classified in this group:

FIG. 2

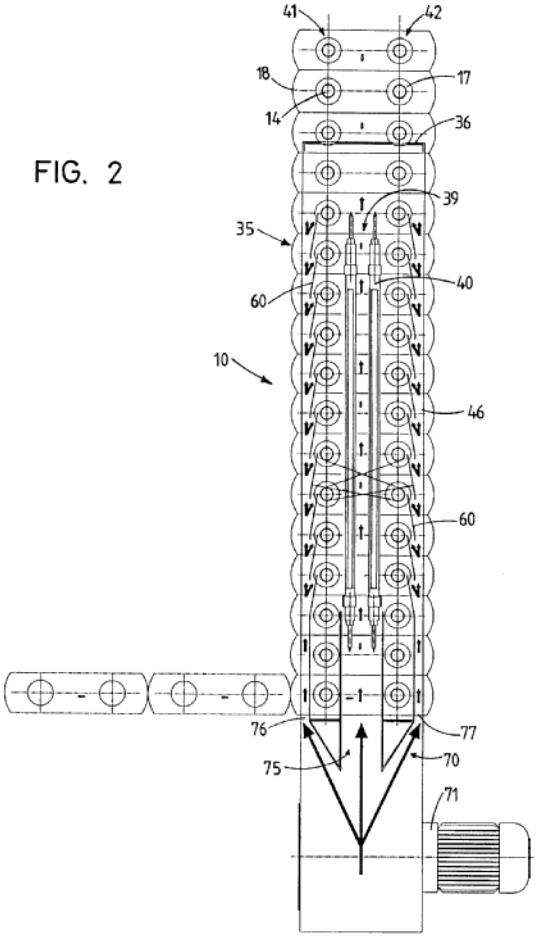

A device that comprises reflectors (60) arranged in an external position relative to the heating tubes (40) and to the preforms (14) and so shaped as to reflect the heating radiation emitted by the heating tubes (40) disposed nearest the reflectors (60) in the direction of the preforms (14) of the farthest row of preforms through the free space between two successive preforms of the nearest row.

B29C 49/684

{using masking}

Definition statement

This place covers:

Heating in an oven which includes masking elements that shield desired parts of a preform therein.

Illustrative example of subject matter classified in this group:

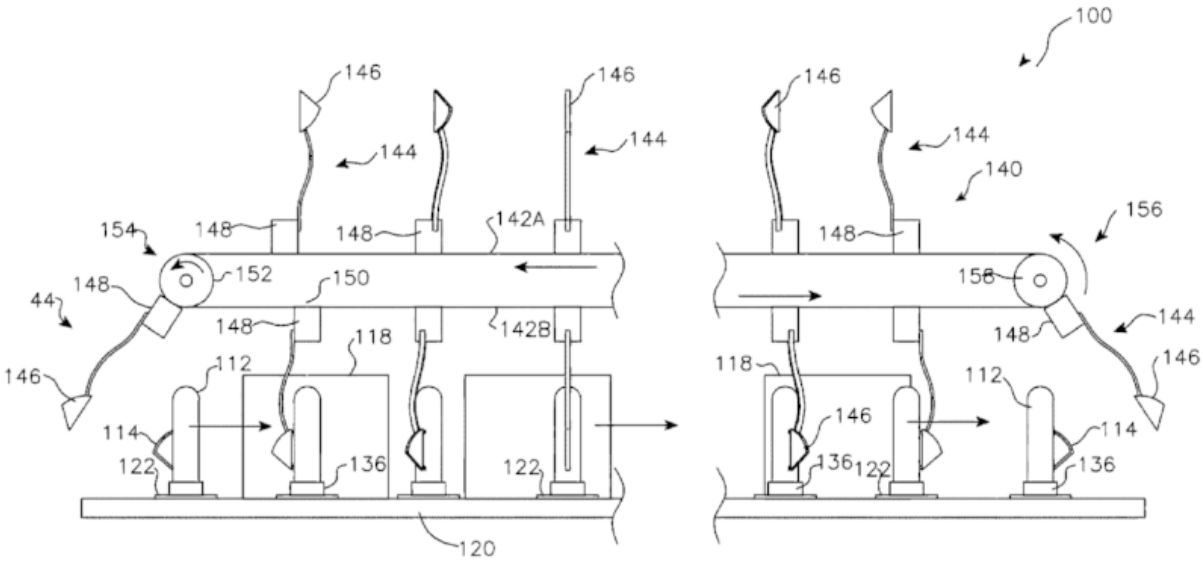

Fig. 3

B29C 49/6845

{using ventilation, e.g. a fan}

Definition statement

This place covers:

Heating in an oven which includes ventilation elements.

Illustrative example of subject matter classified in this group:

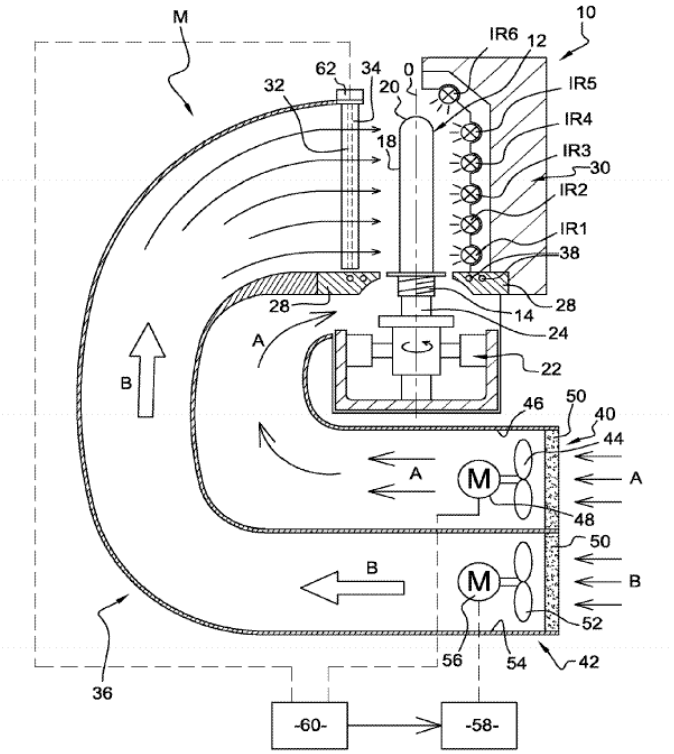

Fig. 2

Oven (10) for the heat treatment of thermoplastic preforms (12) each respectively comprising a first part (14, 16) in its definitive shape and a second part (18, 20) intended to be heated by heating means (30) arranged along at least part of a determined heating path followed by the preforms (12) travelling through the oven, the said oven (10) comprising a cooling system (36) capable respectively of cooling the first parts (14, 16) and the second parts (18, 20) of the preforms. The cooling system (36) comprises at least one cooling device (42) capable of air-cooling at least the second part (18, 20) of the preforms (12), the said cooling device (42) comprising at least ventilation means (52) capable of delivering a given flow rate of cooling air and means (58, 64) for selectively varying, along the heating

path of the preforms (12), at least the cooling airflow rate delivered by the said ventilation means (52) for cooling the said second parts (18,20) of the preforms (12).

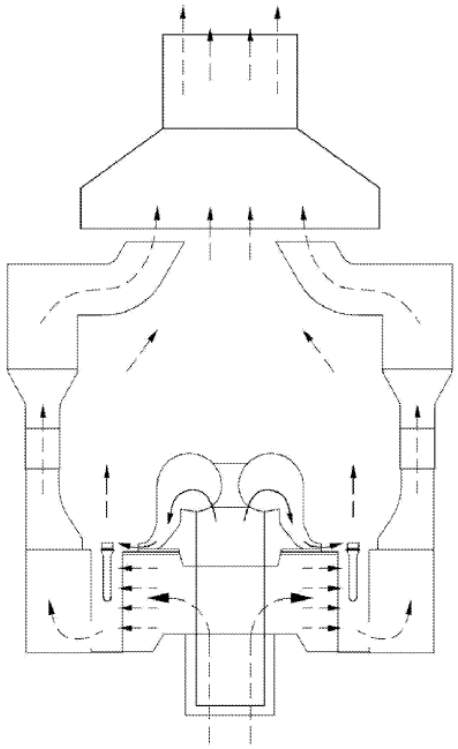

Fig. 3

A bottle blank heating air channel for a bottle blowing machine, wherein a heating box is provided, wherein the heating box is set on the opposite side of the bottle body air channel air outlet, wherein a space for the bottle plank is formed between the heating box and opposite side of the bottle body air channel air outlet, wherein a ventilating channel is provided on the heating box, and wherein the air outlet of the ventilating channel is connected to the air inlet of the bottle body air outlet channel.

B29C 49/685

{Rotating the preform in relation to heating means}

Definition statement

This place covers:

Heating in an oven which includes preform rotation relative to the heating elements.

Illustrative example of subject matter classified in this group:

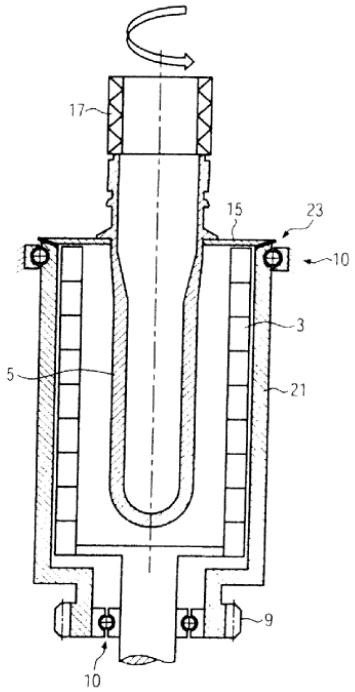

FIG. 4

Furnace for conditioning preforms, in particular for stretch blow-moulding plastic containers, comprising a plurality of heating chambers rotating in a circle for heating one preform each with infrared radiation, holding devices for holding the preforms during heating such that a section of the preform to be conditioned is arranged in a heating chamber, and a section of the preform not to be conditioned is arranged outside the heating chamber.

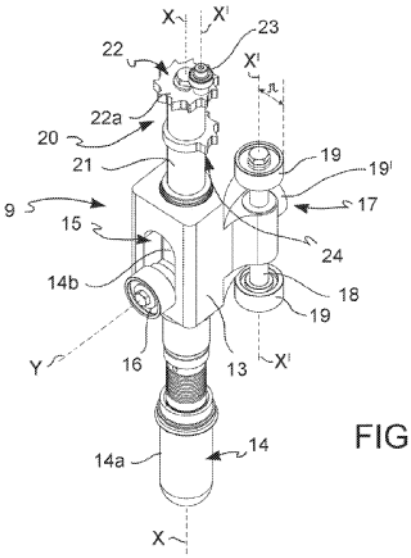

FIG. 3

An oven for blowing or stretch-blowing preforms to provide containers with oval section, comprising a path for the preforms, a transfer system of the preforms from an upstream transport system upstream of the oven and a transfer system of the heated preforms from the oven to a downstream transport system, wherein a plurality of mandrels are slidingly carried along the path, the mandrels configured to temporarily engage with the preforms to conduct the preforms along the path, the oven comprising at least one first heating module and at least one second heating module, wherein the oven comprises

a rotator for rotating said preforms by 180°, said rotator being in median position of said at least one second heating module.

B29C 49/6855

{Cooling of heating means, e.g. avoiding overheating}

Definition statement

This place covers:

Heating in an oven which includes the features of cooling the heating elements so as to prevent overheating of the apparatus or element to be heated.

Illustrative example of subject matter classified in this group:

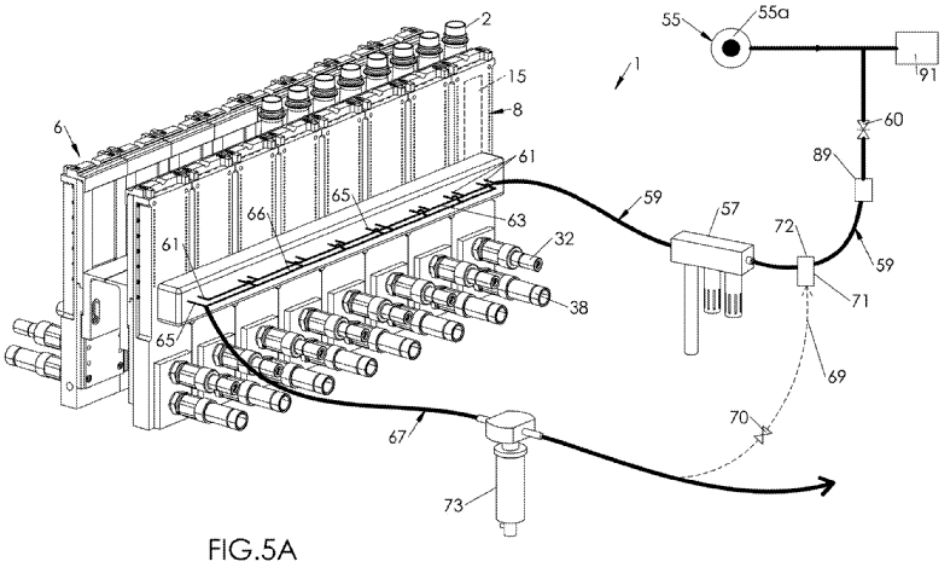

FIG.5A

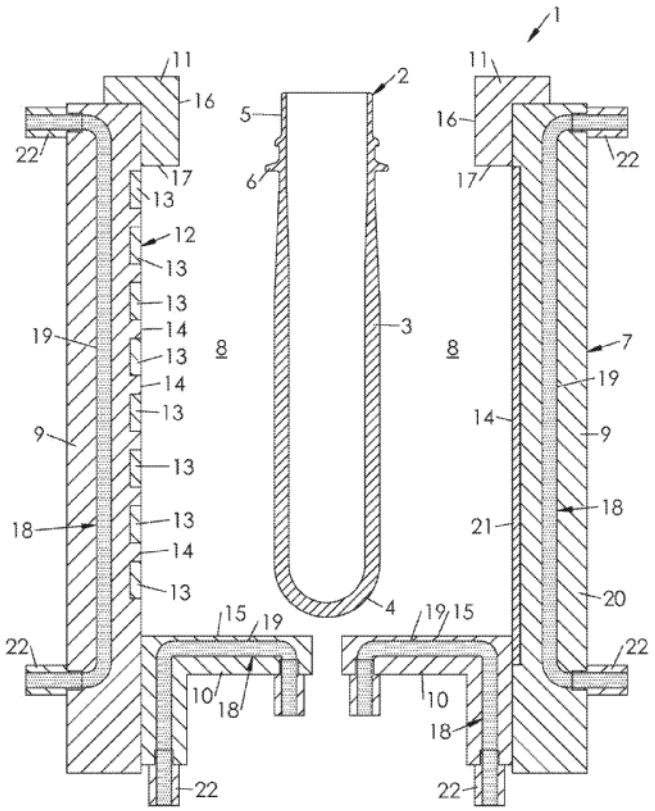

The unit 1 includes a plurality of heaters 13, and a cooling circuit 18 inside a frame 7. The cooling circuit 18 limits the amount of heat produced by the heaters 13.

B29C 49/70

Removing or ejecting blown articles from the mould

Definition statement

This place covers:

Means to facilitate the removing or ejecting of blown articles from the mould. These ejecting means are typically located in the mould.

Illustrative example of subject matter classified in this group:

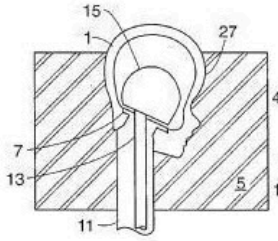

FIG. 4

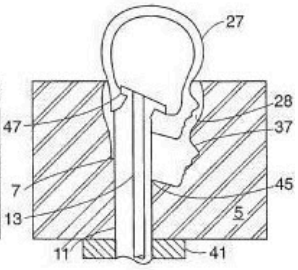

FIG. 5

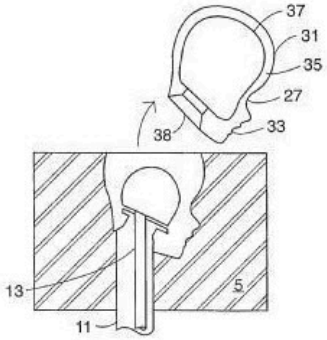

FIG. 6

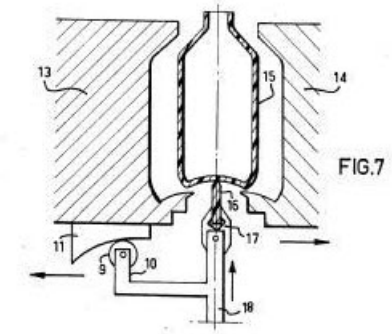

FIG.7

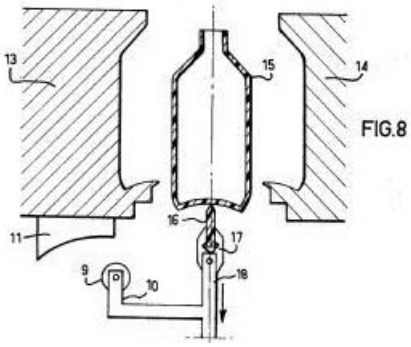

FIG.8

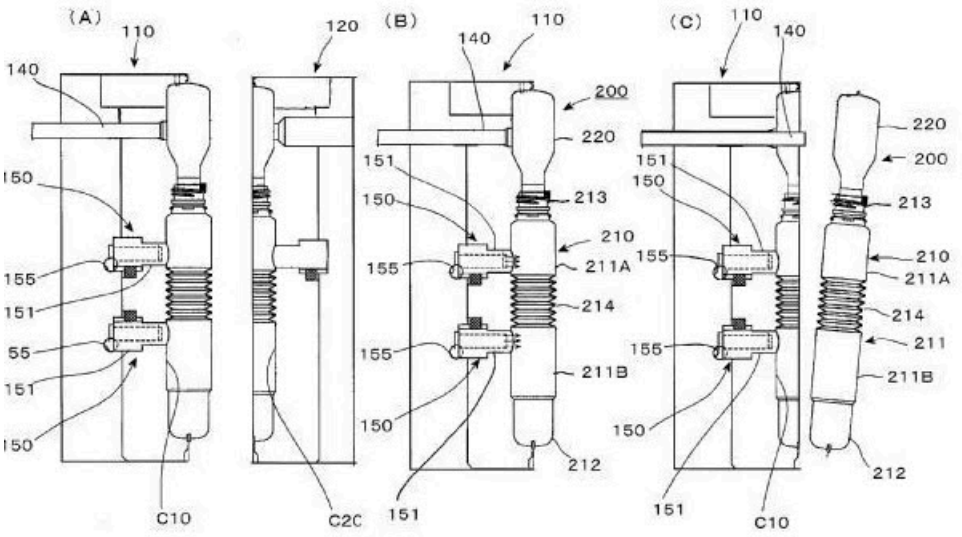

References

Informative references

Attention is drawn to the following places, which may be of interest for search:

Moulds in general with means for to facilitate the removal of articles	B29C 33/44
Means explicitly adapted for transporting blown articles	B29C 49/42069

Glossary of terms

In this place, the following terms or expressions are used with the meaning indicated:

ejecting	separating moulded products from the mould cavity

B29C 49/72

Deflashing outside the mould

Definition statement

This place covers:

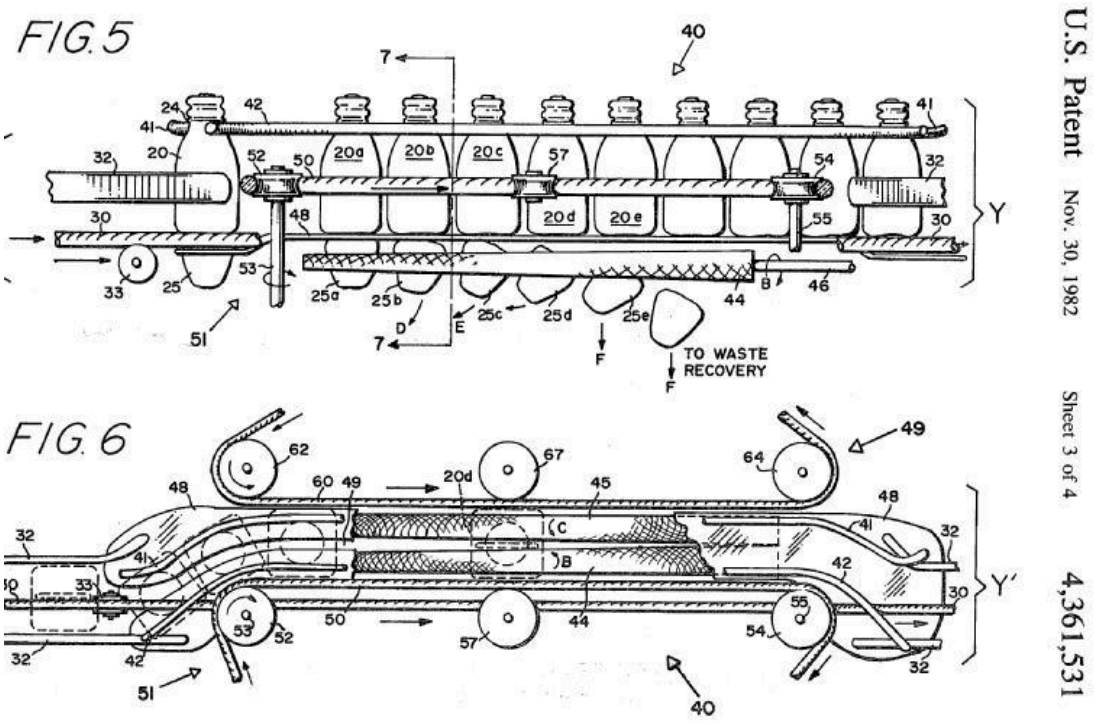

- EP1050394

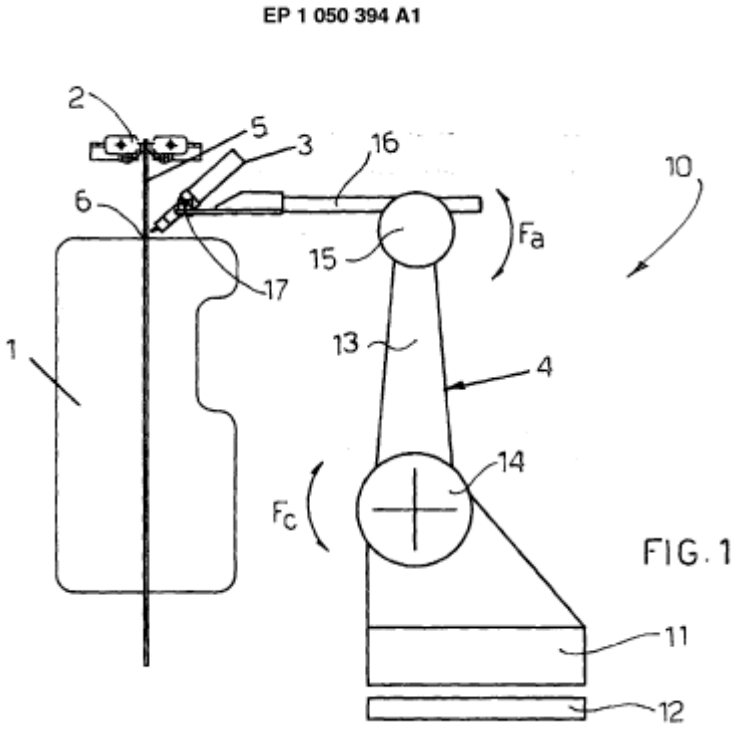

References

Informative references

Attention is drawn to the following places, which may be of interest for search:

Deflashing in general	B29C 37/02

B29C 49/74

Deflashing the neck portion

Definition statement

This place covers:

- US2005284275

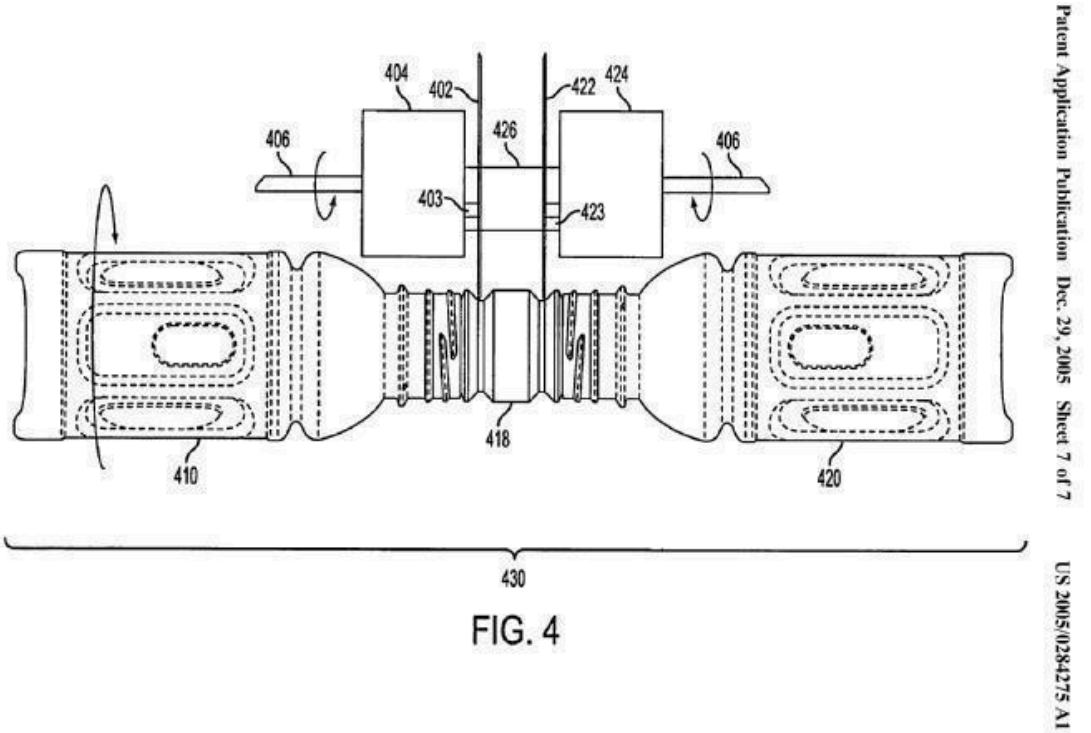

FIG. 4

- GB1483712

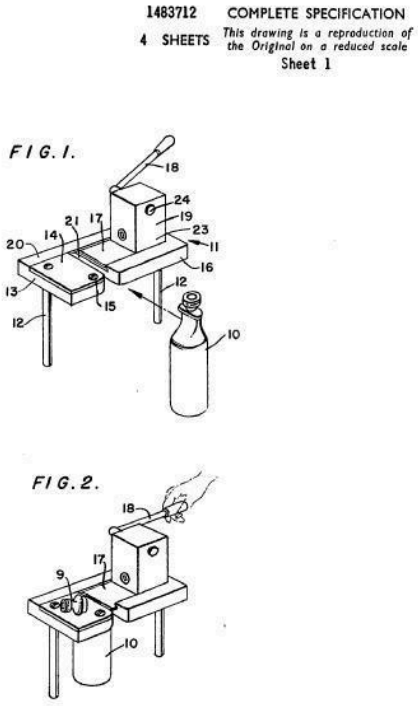

B29C 49/76

Neck calibration

Definition statement

This place covers:

Illustrative example of subject matter classified in this group:

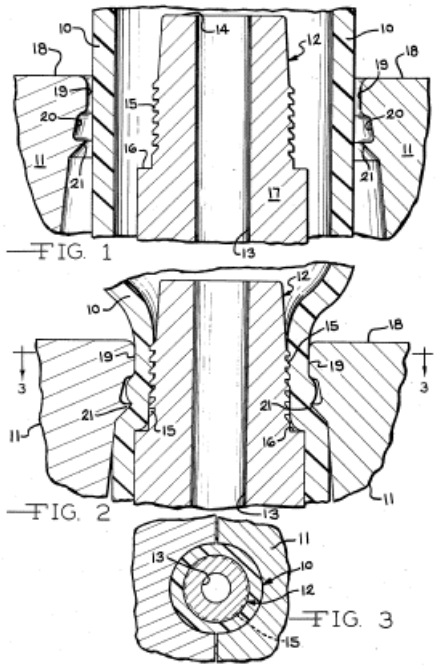

Illustrative example of subject matter classified in this group:

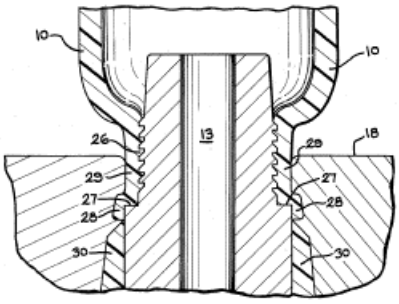

FIG. 4

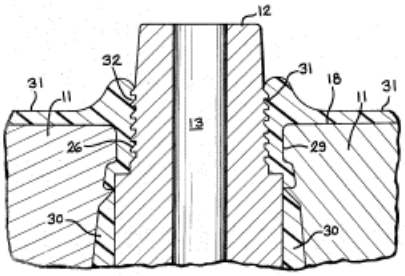

FIG. 5

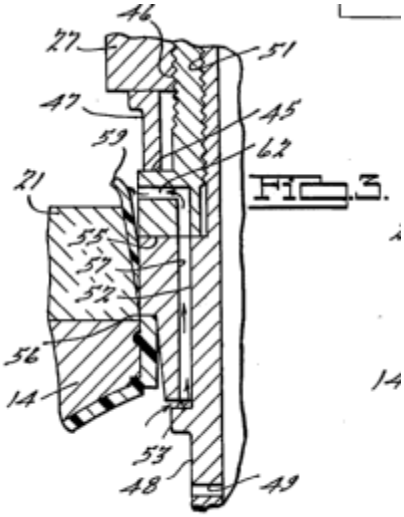

FIG. 3.

B29C 49/783

{blowing pressure}

References

Informative references

Attention is drawn to the following places, which may be of interest for search:

Control of fluid pressure in general	G05D 16/00

B29C 2049/7831

{characterised by pressure values or ranges}

Definition statement

This place covers:

Control of a material-shaping process including controlling blowing pressure values/ranges.

Illustrative example of subject matter classified in this group:

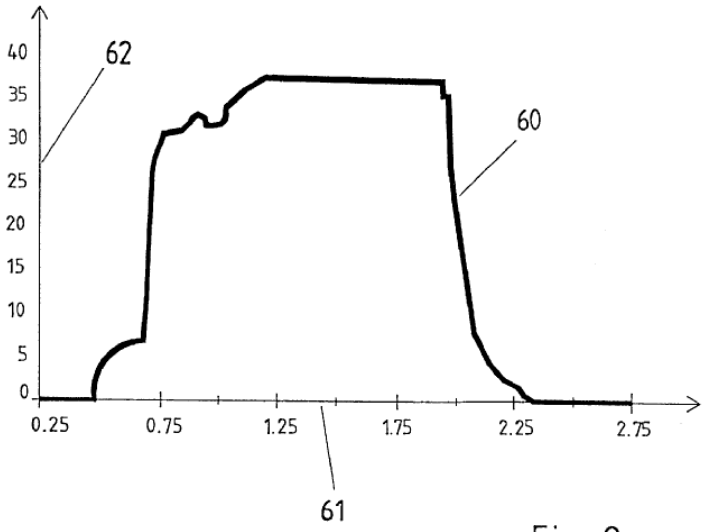

Fig. 8

A process wherein the pressure during the preliminary blowing phase has a value in the interval of 10 bar to 25 bar and wherein the pressure during the primary blowing phase has a value in the interval of 25 bar to 40 bar.

B29C 2049/7832

{Blowing with two or more pressure levels}

Definition statement

This place covers:

Control of a material-shaping process including controlling blowing pressure of two or more levels.

Illustrative example of subject matter classified in this group:

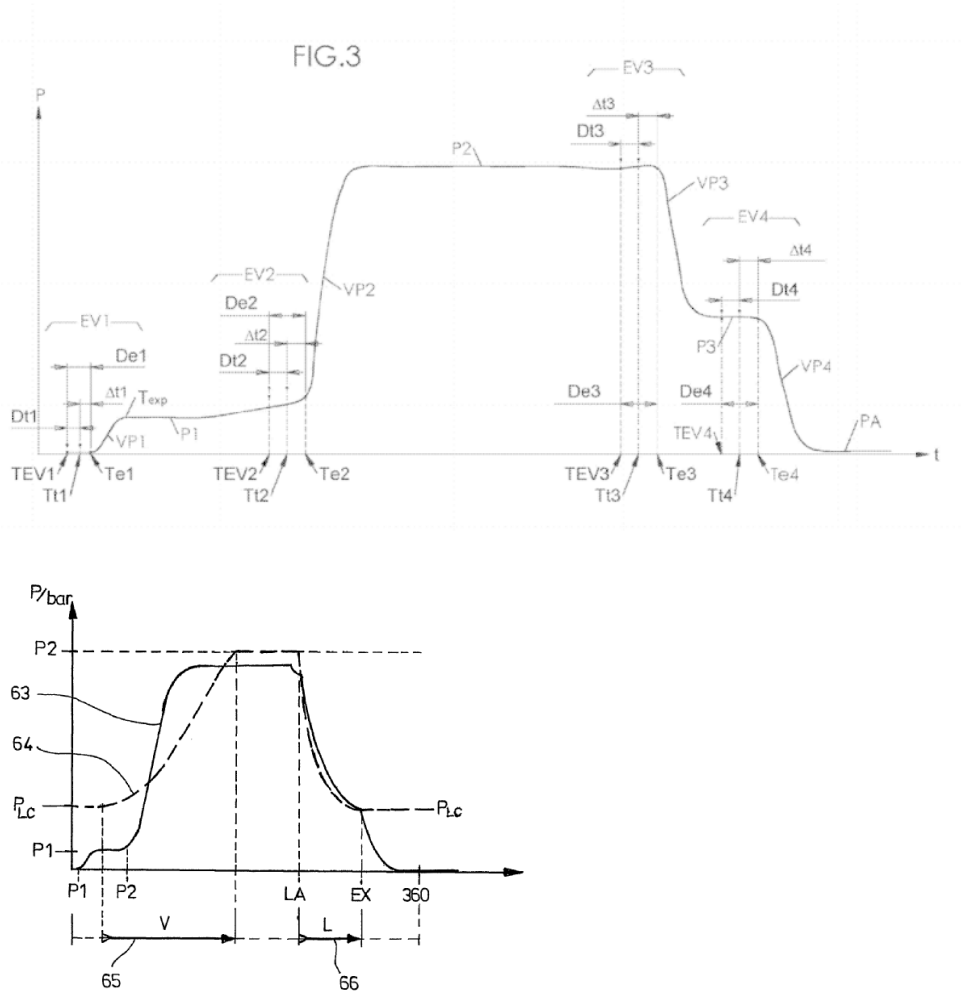

FIG.6

B29C 2049/7833

{Blowing with three or more pressure levels}

Definition statement

This place covers:

Control of a material-shaping process including controlling blowing pressure of three or more levels.

Illustrative example of subject matter classified in this group:

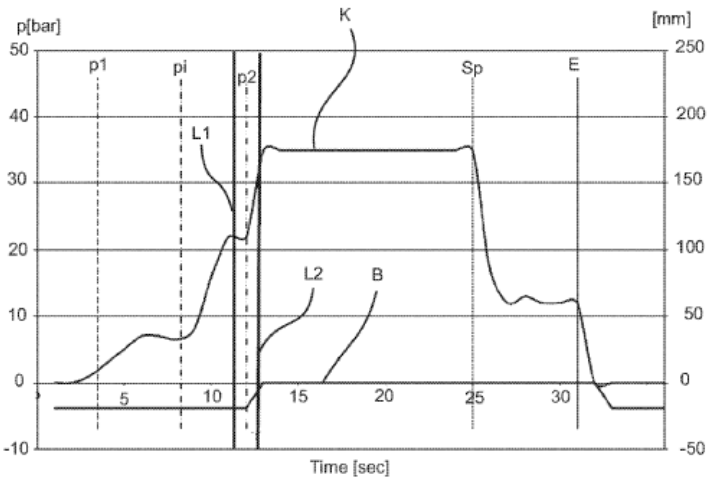

Fig. 7

B29C 2049/7834

{Pressure increase speed, e.g. dependent on stretch or position}

Definition statement

This place covers:

Control of a material-shaping process including controlling blowing pressure in terms of how fast/slow the pressure increases. This may depend on preform stretch or position.

Illustrative example of subject matter classified in this group:

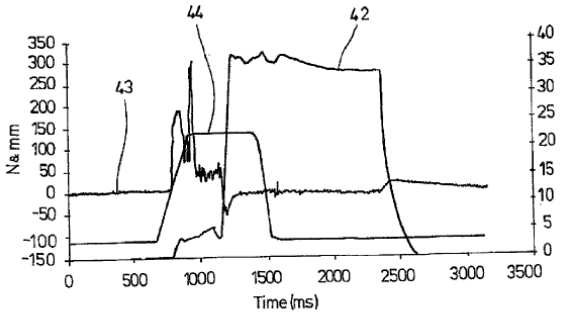

FIG.6

FIG. 6 illustrates in a diagram the relation of a chronological blow pressure pattern 42, a stretching force development 43 as well as a stretching rod positioning 44. The scale of the time axis takes place in this case in milliseconds and the amplitude values are scaled in bar, Newton or millimeter. FIG. 6 illustrates that with respect to the positioning of the stretching rod 11, this stretching rod is initially moved essentially without development of a stretching force into the preform 1. After a contact of the stretching rod 11 at the bottom of the preform 1, the latter is stretched and a relatively great development of the stretching force takes place. After the longitudinal stretching is concluded, the remaining stretching force results from the stabilization of the preform in the stretched position while taking into consideration elastic restoring forces within the material of the preform. The blowing pressure sequence 42 shows the division into a pre-blowing phase during the carrying out of the stretching process and a principal blowing phase after a significant conclusion of the stretching procedure.

B29C 2049/7835

{Pressure reduction speed}

Definition statement

This place covers:

Control of a material-shaping process including controlling blowing pressure in terms of how fast/slow the pressure decreases. This may depend on preform stretch or position.

Illustrative example of subject matter classified in this group:

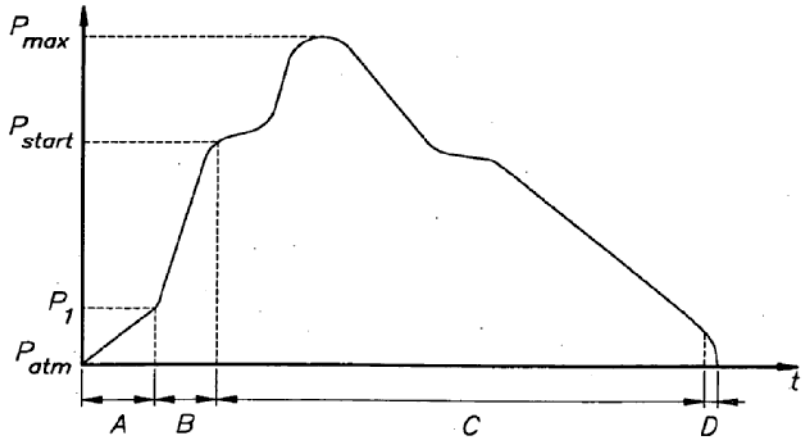

Fig.8

While blowing, the compressed air itself is preferably cooled to an adjustable temperature as well, which may be either higher or lower than zero degrees Celsius. Thus, the decrease of pressure can be faster, since the blown object has to cool less long, and the de-aeration time D thus decreases, and the production speed and the output of the blowing process increase. The decrease of pressure in area C can be obtained by successively going through more than one adjustable discrete pressure value or, when using an unlimited number of such adjustable pressure values, by running through a continuously adjustable curve, whereby the last set pressure value can amount to zero bar relative pressure in relation to the atmospheric pressure.

B29C 2049/7861

{of the preform}

Definition statement

This place covers:

Control of a material-shaping process including controlling temperature of a preform.

Illustrative example of subject matter classified in this group:

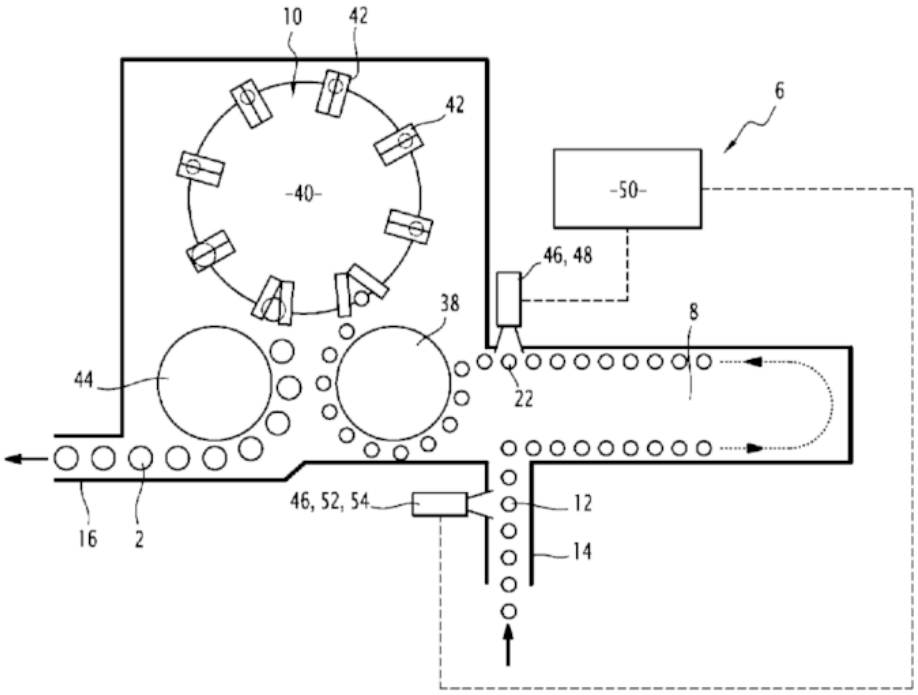

FIG.1

Figure 1 depicts the outlet of the heating station 8, the heated preforms 22 are at a temperature comprised between the glass transition temperature of the material of the preform and its crystallization temperature, in order to obtain, at the outlet of the heating station 8, soft heated preforms 22 able to be deformed under the influence of a pressure injected inside the heated preforms 22, i.e. malleable preforms. The temperature is such that the preforms however still maintain their shape at the atmospheric pressure, meaning that they do not tend to be deformed without any pressure applied on them. As an example, for a preform made of PET in the dimensions range mentioned previously, the preform is heated at a temperature comprised between 100° C. and 140° C. It should however be noted that the more the preform has to be subjected to a greater expansion along an axial direction and/or along radial directions, the more the preform is heated at a temperature over the glass transition temperature, but without reaching the crystallization temperature, for example around 135° C. for a preform made of PET in the dimensions range mentioned previously. Consequently, for preforms having a high bi-orientation rate, defining the cumulated axial elongation and radial expansion to which the preform has to be subjected, one wants to work at the highest possible temperatures, but without crystalizing the material of the preform, in order to allow the preform to be deformed easily enough to reach the wanted shape of the container without the appearance of an overstretching of the material, possible with a temperature not high enough and/or of an high stretching rate.

The acquired images or film are then transferred to the control unit 50 and compared to the reference gauge. Furthermore, a sensor for sensing the temperature of the heated preform 22 could be provided and a formula for correcting the acceptable retraction depending on the temperature of the heated preform 22 could be applied. If one of the acquired images or one of the images of the film shows a profile of the preform radially diverging more than the reference gauge, then it is determined that the analyzed preform is unsatisfactory.

B29C 2049/7862

{characterised by temperature values or ranges}

Definition statement

This place covers:

Control of a material-shaping process including controlling temperature of a preform in terms of temperature values or ranges.

B29C 2049/7863

{Cold blow-moulding, e.g. below Tg}

Definition statement

This place covers:

Control of a material-shaping process including controlling temperature of a preform which includes cold blow-moulding processes, e.g. below the glass transition temperature of the preform material.

B29C 2049/7864

{of the mould}

Definition statement

This place covers:

Control of a material-shaping process including controlling temperature of a mould.

Illustrative example of subject matter classified in this group:

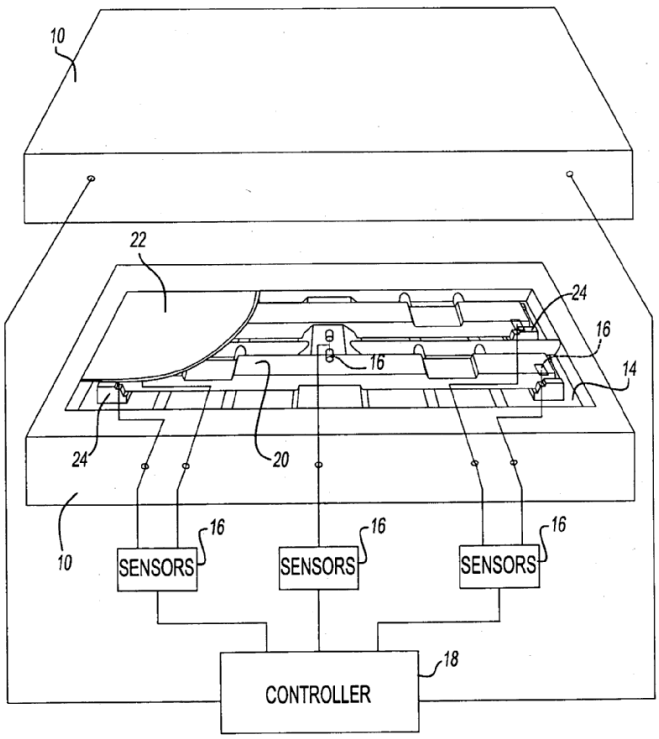

Fig-2

A moulding machine, wherein a sensor comprises a temperature sensor for sensing the temperature of the mould.

B29C 2049/78645

{characterised by temperature values or ranges}

Definition statement

This place covers:

Control of a material-shaping process including controlling temperature of a mould in terms of temperature values or ranges.

Illustrative example of subject matter classified in this group:

Fig. 2

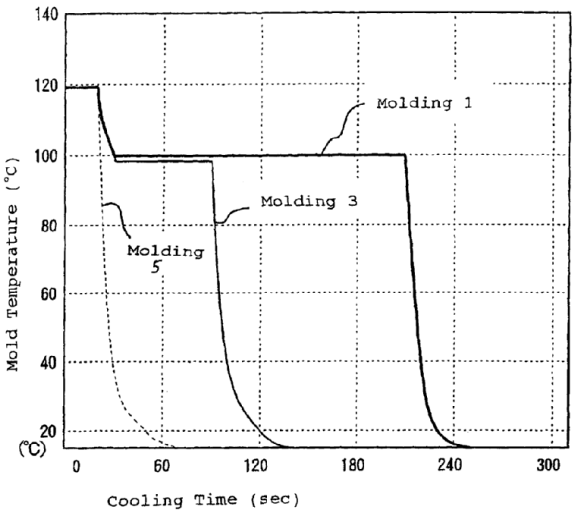

B29C 2049/7865

{of the stretching means, e.g. stretch rod}

Definition statement

This place covers:

Control of a material-shaping process including controlling temperature of stretching elements, e.g. stretch rod.

Illustrative example of subject matter classified in this group:

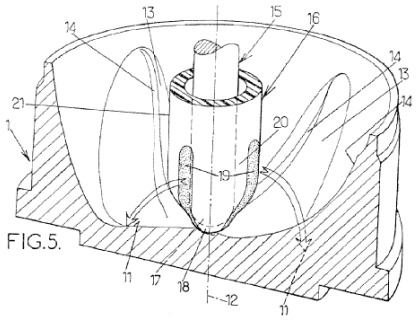

FIG.5.

The drawing rod 15, which is made of metal, is brought into contact sequentially with the bottoms of successive hot preforms and its temperature undoubtedly rises because of these repetitive contacts; however, these contacts being only intermittent, the rod remains at all times at an average temperature substantially lower than that of the hot preforms. To give a concrete idea of this, the preforms are typically heated to a temperature of the order of 100° C. whereas the average temperature of the drawing rod remains of the order of 85° C.

B29C 2049/7867

{of the heating or cooling means}

Definition statement

This place covers:

Control of a material-shaping process including controlling temperature of the elements which provide heating or cooling.

B29C 2049/78675

{of the heating means}

Definition statement

This place covers:

Control of a material-shaping process including controlling temperature of elements which provide heating.

Illustrative example of subject matter classified in this group:

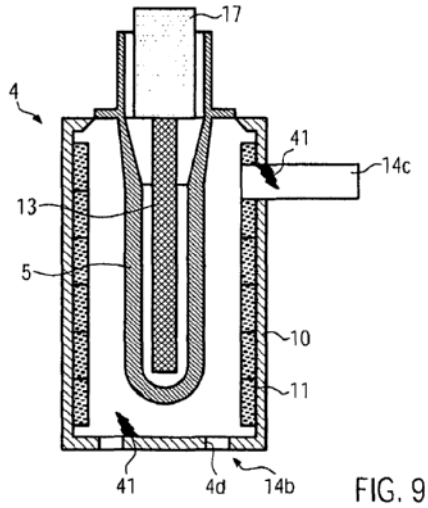

FIG. 9

FIG. 9 shows a heating chamber 4 in which temperature probes 41 are additionally provided. These can, for example, be provided in the vicinity of the recesses 4d of the feed line 14b or on the discharge line 14c of the cooling air 14. With the temperature probes 41 it is possible to monitor the temperature within the heating chambers 4. Similarly, it is conceivable that with the aid of the temperature probes 41 and a suitable control device the amount of cooling air introduced into the heating chamber 4 can be controlled, in particular with convection driven by a blower. However, this would also be possible with free convection. A temperature control can also be used to stabilise the heat distribution in the preform and/or to compensate differences between individual heating chambers 4 or preforms 5. It is also conceivable to regulate the amount of air to be introduced in dependence of a measured final temperature after heating the preform and/or to mix discharged cooling air 14 for temperature control at least partly with the cooling air 14 to be fed in and/or to pass the discharged cooling air 14 to a heat exchanger for heat extraction in another process.

With the aid of temperature probes 41 the temperature in the heating chambers 4, in particular after closing the lid 21 with the heating chamber 4 uncharged, can be set to a constant value or to a uniform output temperature for heating the preforms 5.

B29C 2049/7868

{of the articles}

Definition statement

This place covers:

Control of a material-shaping process including controlling temperature of the formed article.

B29C 2049/78705

{of a layer, e.g. intermediate layer}

Definition statement

This place covers:

Control of a material-shaping process including controlling thickness of a preform in terms of the particular thickness of a layer within the preform.

Illustrative example of subject matter classified in this group:

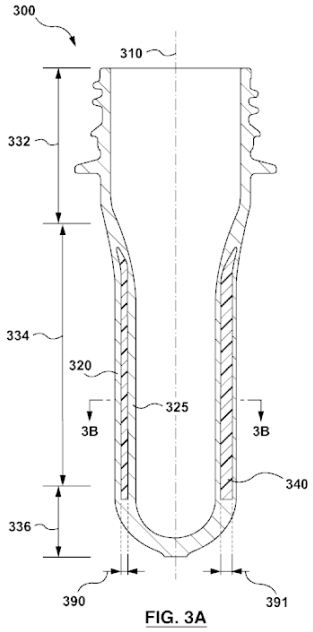

FIG. 3A

FIG. 2

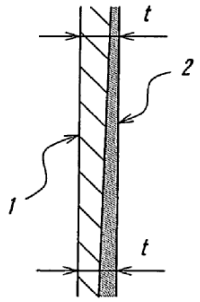

FIG. 3

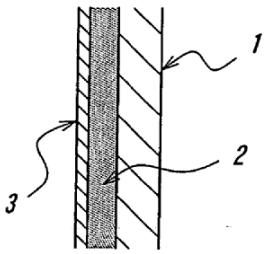

FIG. 4

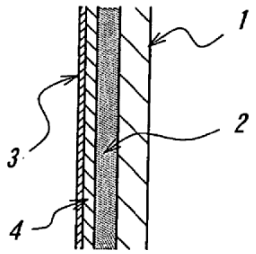

FIG. 5

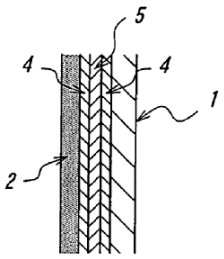

FIG. 6

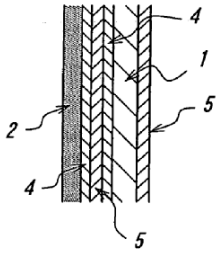

FIG. 7

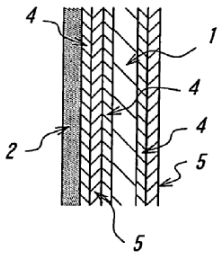

As seen in Figures 2-7, a laminated and moulded body obtained by coextruding and moulding at least two kinds of resin materials. At least one layer of said laminated and moulded body comprises a coloured layer having a thickness continuously or intermittently varied in a predetermined direction with respect to the extruding direction of the resin material of said coloured layer, wherein the predetermined direction preferably is a direction parallel to the extruding direction of said at least one layer of said laminated and moulded body or preferably the predetermined direction is a direction intersecting the extruding direction of said at least one layer of said laminated and moulded body or preferably the predetermined direction comprises a direction parallel to the extruding direction of said at least one layer of said laminated and moulded body and another direction intersecting the extruding direction, wherein preferably the full thickness of said laminated and moulded body is substantially constant along said predetermined direction, wherein preferably said coloured layer has a thickness varied within a range of 50% of the full thickness of said laminated and moulded body.

B29C 2049/7871

{of the extruded preform thickness}

Definition statement

This place covers:

Control of a material-shaping process including controlling thickness of a preform in terms of the thickness of the preform as-extruded.

B29C 2049/78715

{of the blown article thickness}

Definition statement

This place covers:

Control of a material-shaping process including controlling thickness of a preform in terms of the thickness of the blown article.

Illustrative example of subject matter classified in this group:

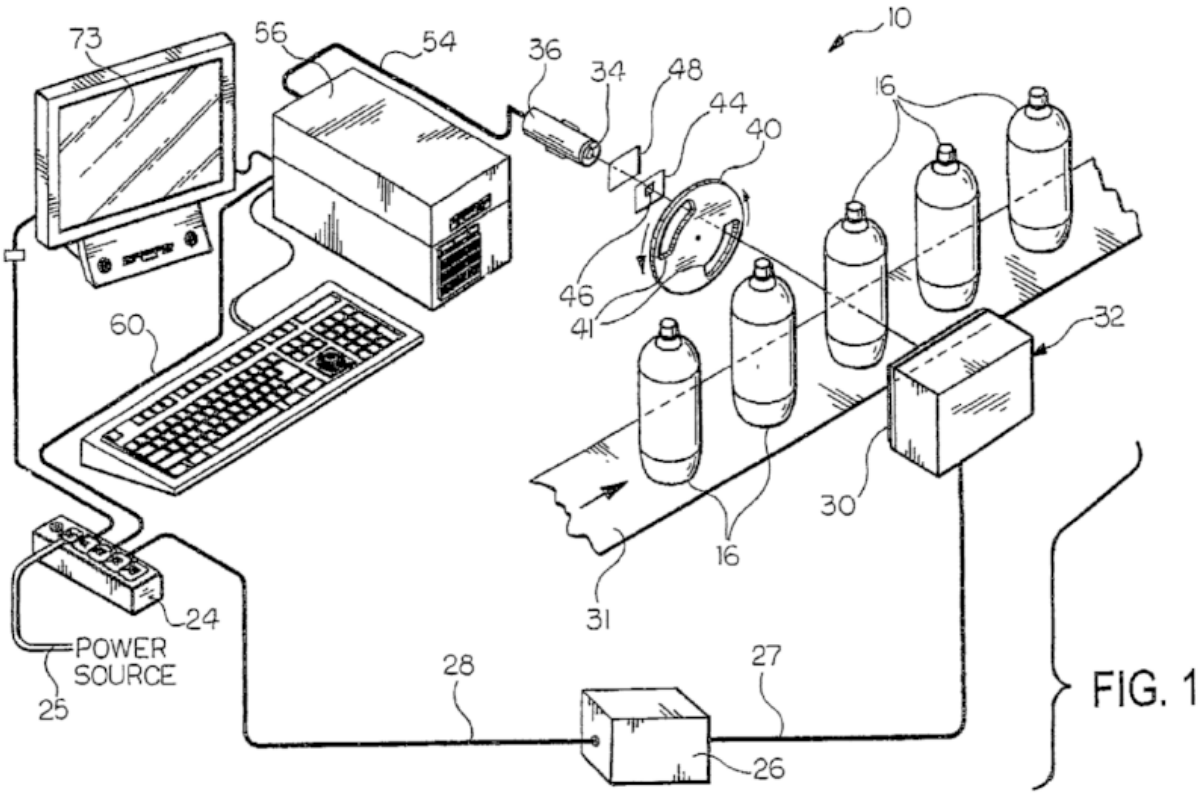

FIG. 1

Figure 1 shows machine control features connected to moulding devices for a thickness monitor that generates a thickness signal representing an average wall thickness of the container; and a system control connected to said thickness monitor and being responsive to said thickness signal for generating a control signal, a control signal for adjusting operation of the moulding devices based upon average wall thickness, such that the system control responds to feedback signals generated by the moulding devices by adjusting operation of the moulding devices.

B29C 2049/7873

{Extrusion speed; Extruded preform position or length; Extrusion fall speed}

Definition statement

This place covers:

Control of a material-shaping process including controlling extrusion speed, such as extrudate position, length, or fall speed.

B29C 2049/7874

{Preform or article shape, weight, defect or presence}

Definition statement

This place covers:

Control of a material-shaping process including controlling preform attributes of shape, weight, or presence of defect.

Illustrative example of subject matter classified in this group:

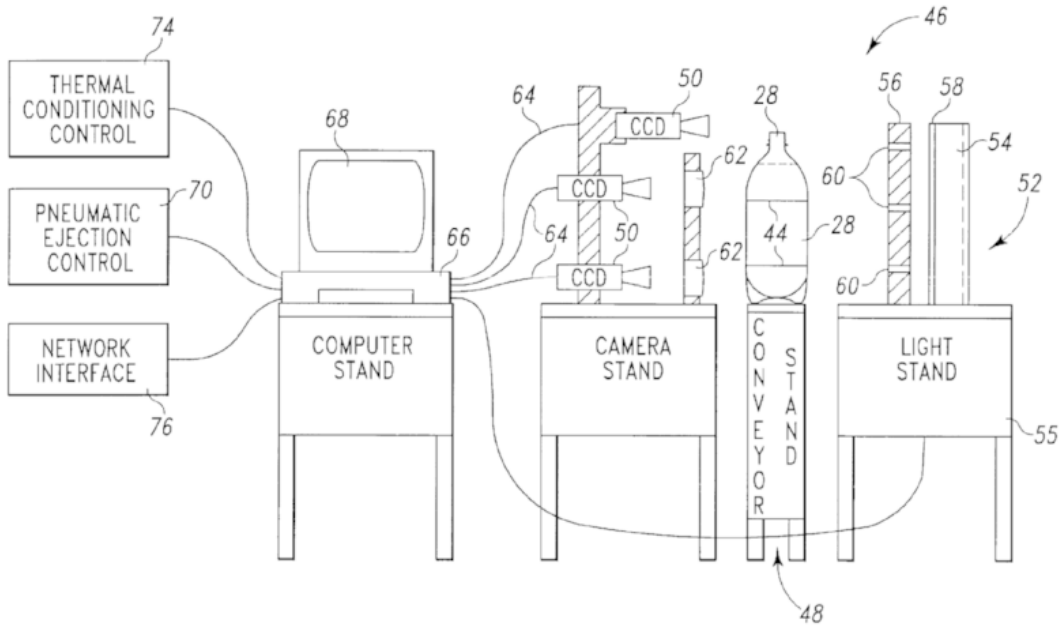

This figure depicts detecting, from at least some of the blow-moulded containers in the production process, the axial location of the indicator relative to a control location; determining for the at least some blow-moulded containers a material distribution outcome based on the detected axial locations of each indicator accumulating data representative of the material distribution outcome for a group of containers; computing an average material distribution characteristic for the group of containers; classifying the average material distribution characteristic for the group of containers in one of a pre-defined set of classes; and providing a signal based on the classification.

B29C 2049/78745

{Weight or density}

Definition statement

This place covers:

Control of a material-shaping process including controlling preform attributes of weight or density.

B29C 2049/7875

{Size or shape}

Definition statement

This place covers:

Control of a material-shaping process including controlling preform attributes of size or shape.

B29C 2049/7876

{Defects}

Definition statement

This place covers:

Illustrative example of subject matter classified in this group:

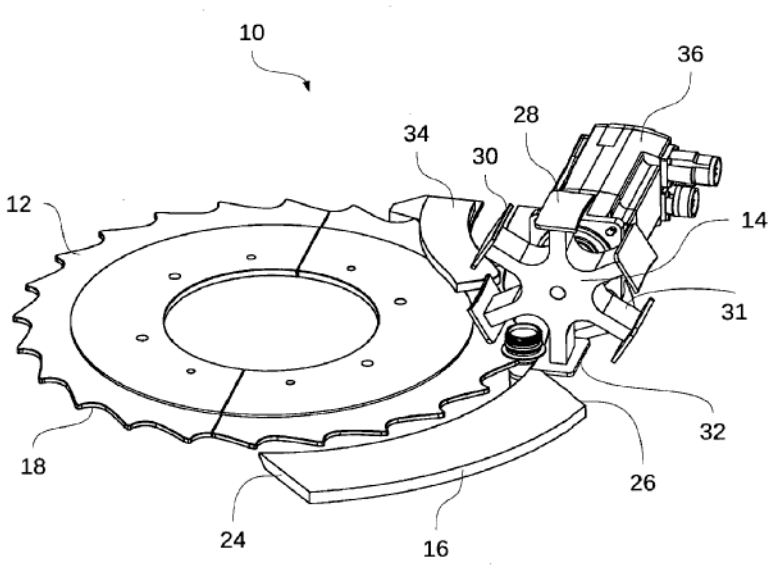

Fig. 1

B29C 2049/78765

{Presence, e.g. of the preform in the mould}

Definition statement

This place covers:

Control of a material-shaping process including controlling preform attributes of a presence of a defect in the preform.

B29C 2049/7878

{Preform or article handling, e.g. flow from station to station}

Definition statement

This place covers:

Measuring, controlling, or regulating the movement and/or handling or preforms, parisons, or articles from one location to another location along a process flow direction.

Illustrative example of subject matter classified in this group:

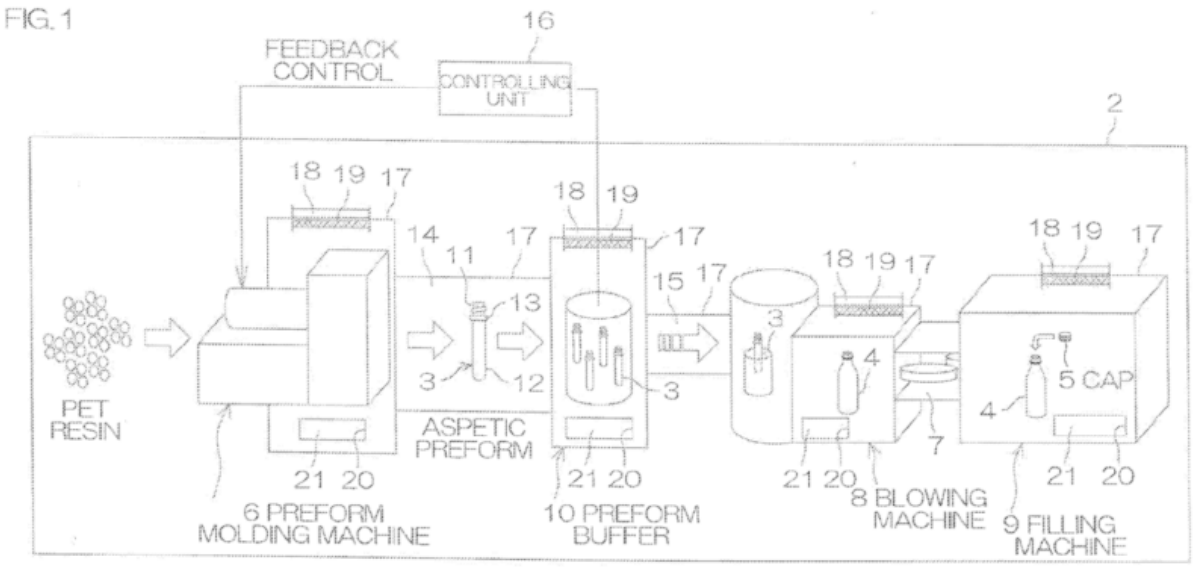

B29C 2049/78805

{Computer or PLC control}

Definition statement

This place covers:

Illustrative example of subject matter classified in this group:

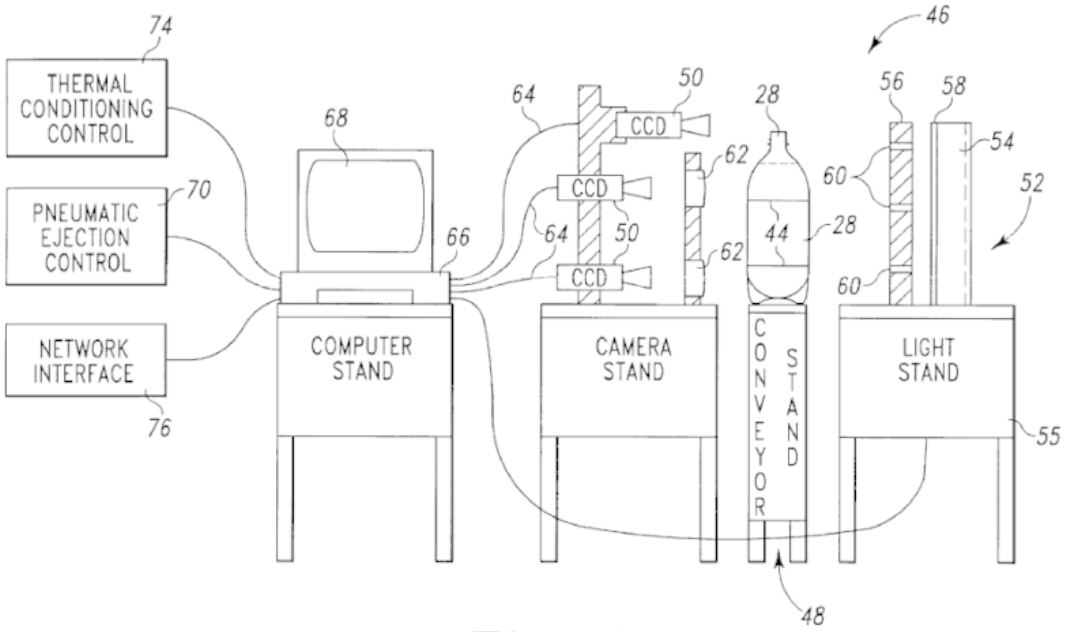

Fig. 7

B29C 2049/7881

{Mechanical control}

Definition statement

This place covers:

Illustrative example of subject matter classified in this group:

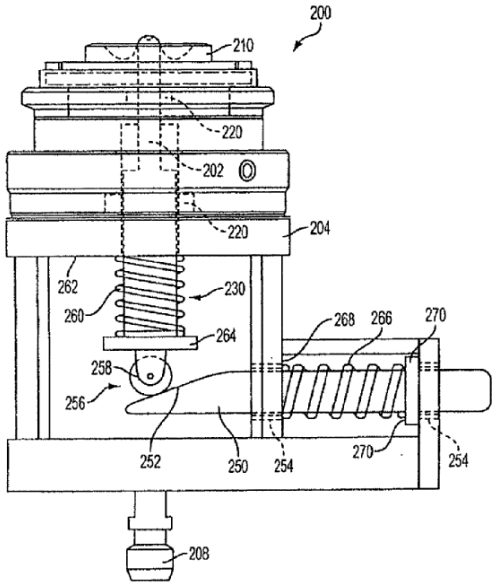

FIG. 3A

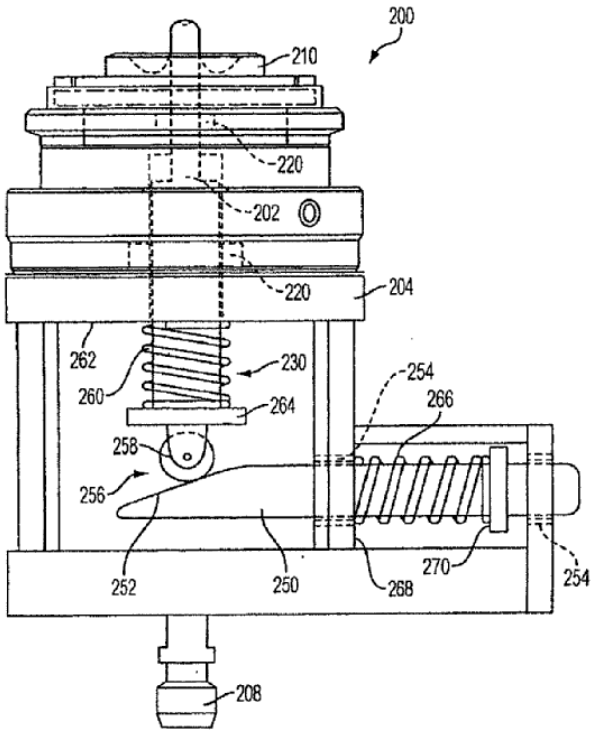

FIG. 3B

B29C 2049/78815

{using wireless transmission}

Definition statement

This place covers:

Where the controller type or interface uses wireless transmission.

Illustrative example of subject matter classified in this group:

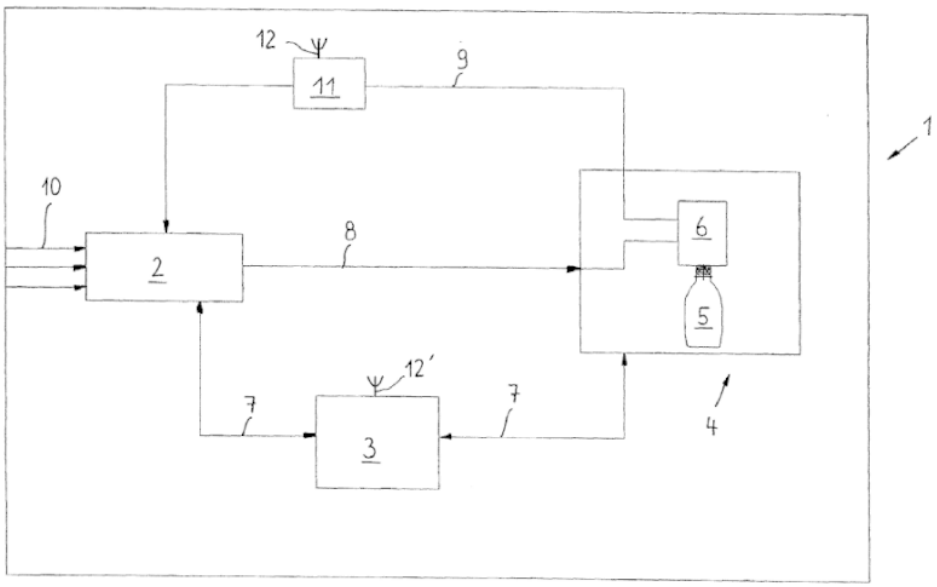

FIG. 1

Figure 1 illustrates the air recirculation 9 equipped with a pressure sensor 11 which monitors the pressure conditions of the blow-moulding air to be recirculated out of the container 5. This data is sent from the pressure sensor 11 to the transmitting and receiving unit 12 of the control unit 3 via a transmitting/receiving unit 12' by wireless transmission. With the help of these results as well as other results, the control unit 3 is able to optimally regulate the compressor 2 in order to optimise and/or reduce the power consumption by the entire hollow body manufacturing unit 1.

B29C 2049/7882

{Control interface, e.g. display}

Definition statement

This place covers:

Illustrative example of subject matter classified in this group:

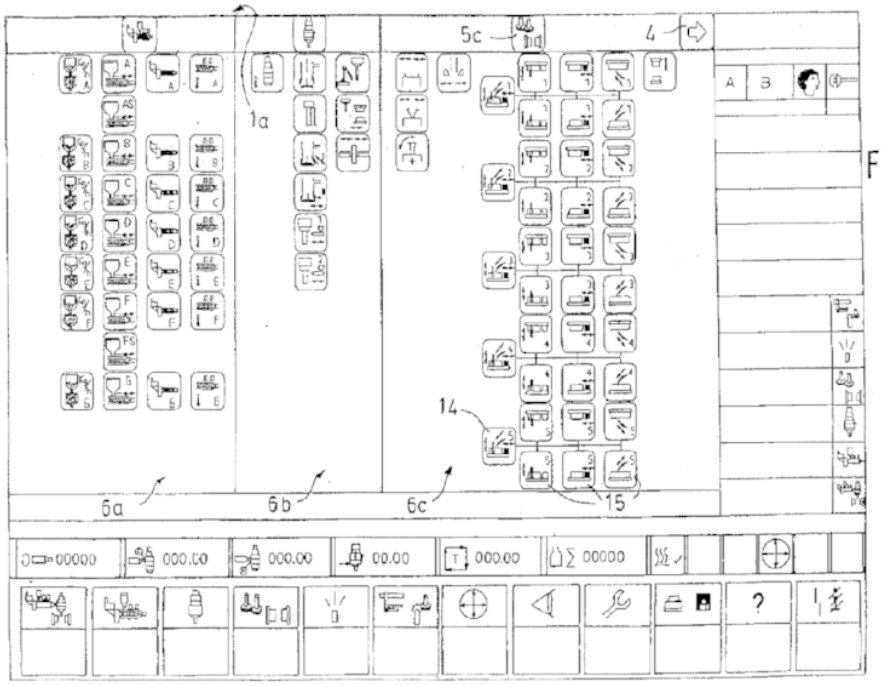

Fig.1

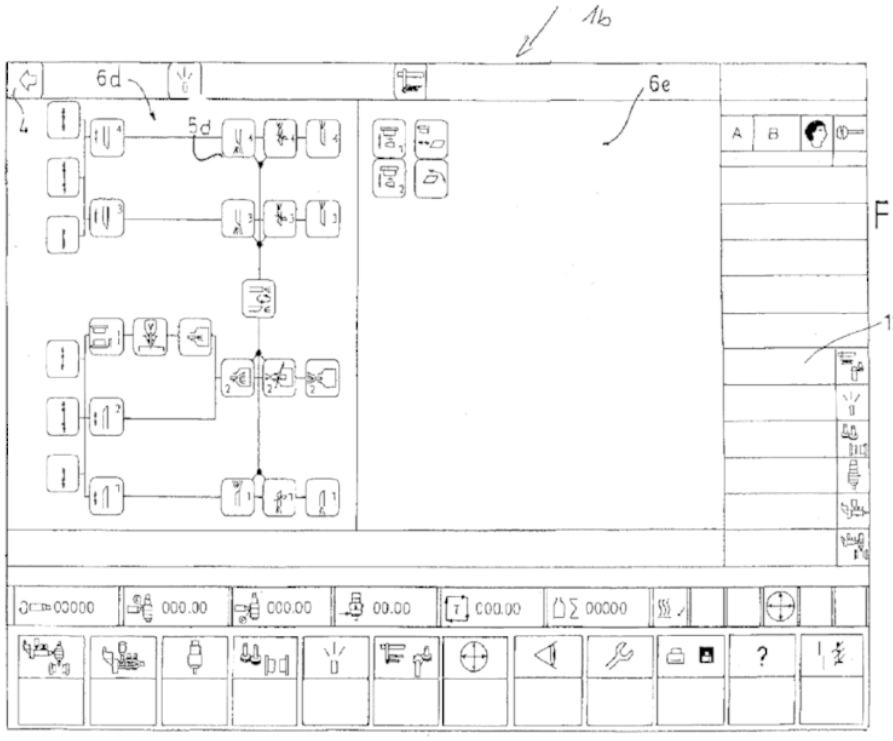

Fig.2

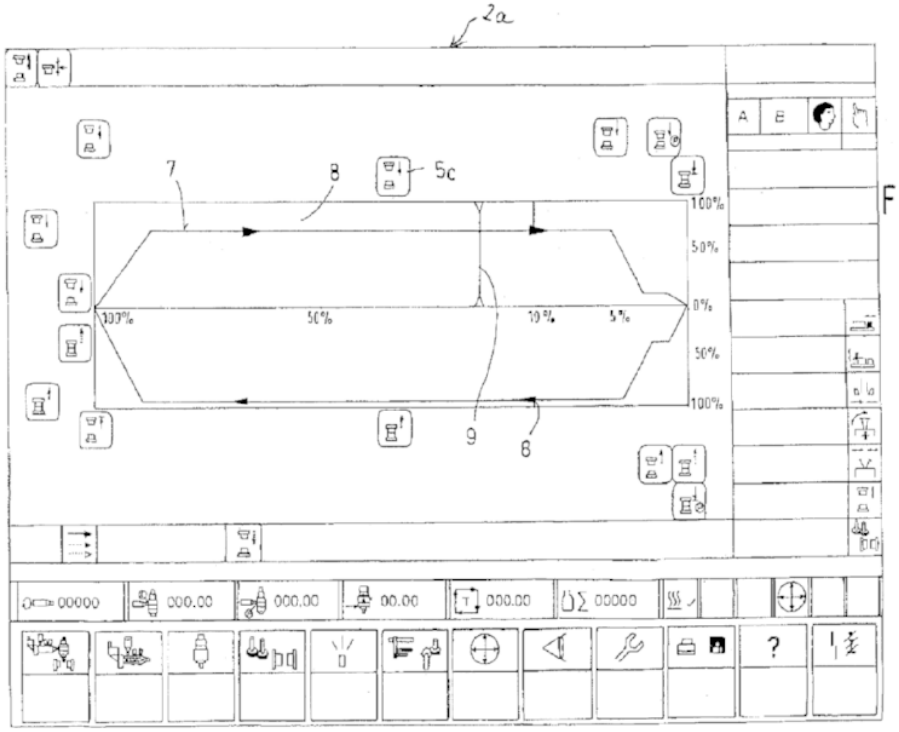

Fig.3

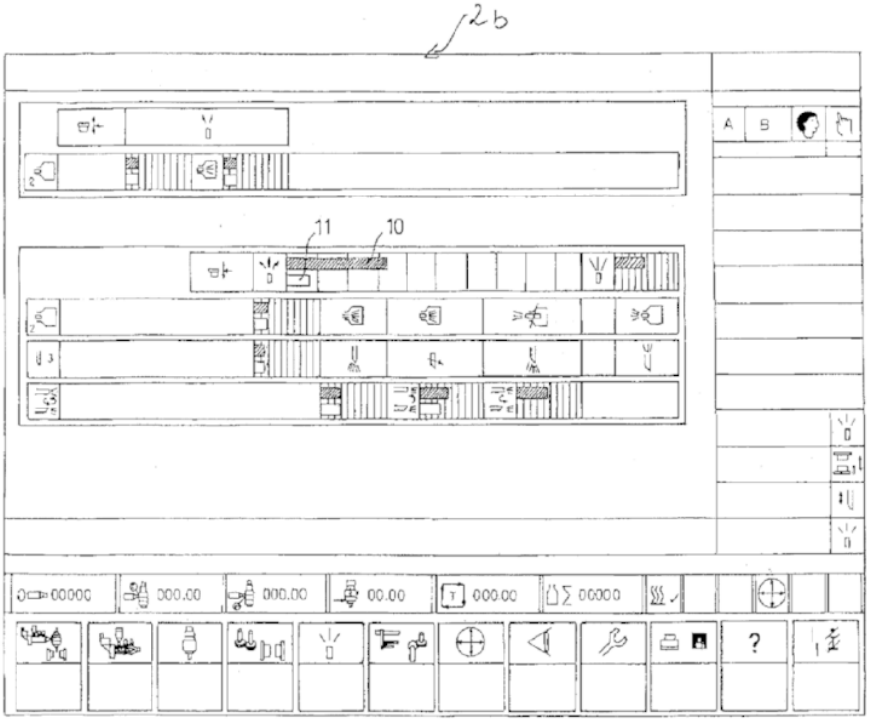

Fig.4

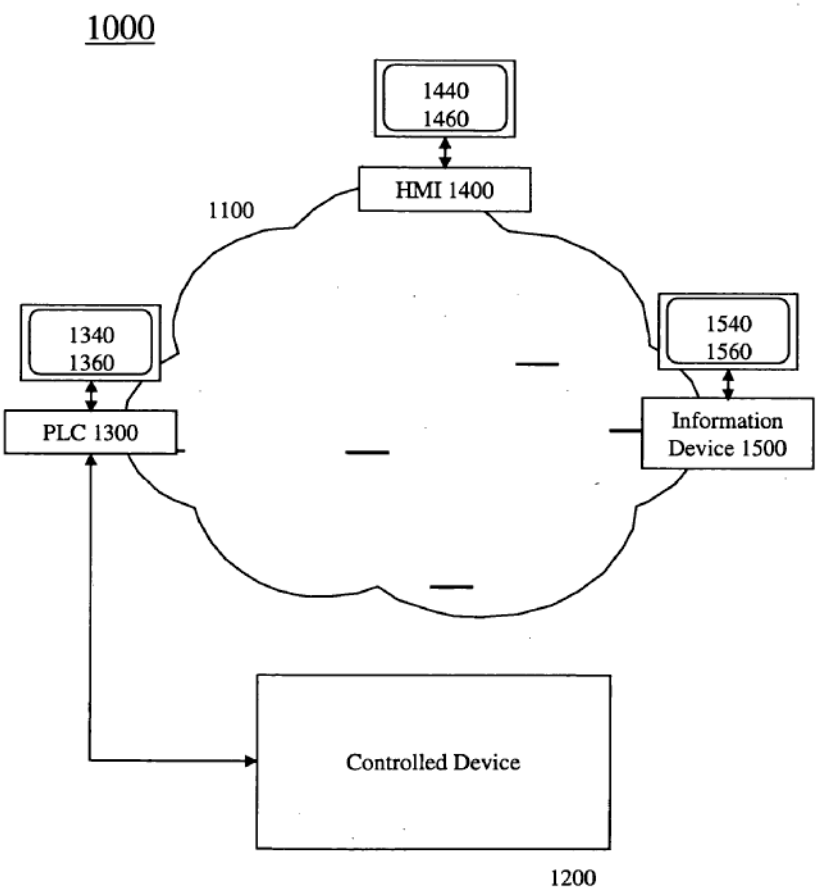
1000
1440
1460
HMI 1400
1100
1340
1360
PLC 1300
1540
1560
Information
Device 1500
Controlled Device
1200

Fig. 1

B29C 49/80

Testing, e.g. for leaks

Definition statement

This place covers:

Illustrative example of subject matter classified in this group:

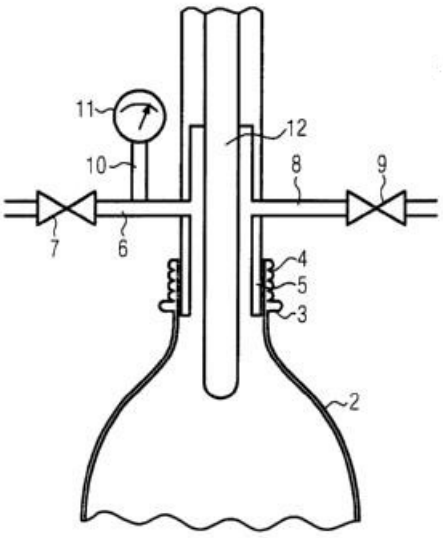

References

Informative references

Attention is drawn to the following places, which may be of interest for search:

Investigating fluid-tightness of structures	G01M 3/02

B29C 2049/801

{Taking preform or article samples, e.g. by cutting out pieces for analysis}

Definition statement

This place covers:

Testing by taking preform or article samples.

Illustrative example of subject matter classified in this group:

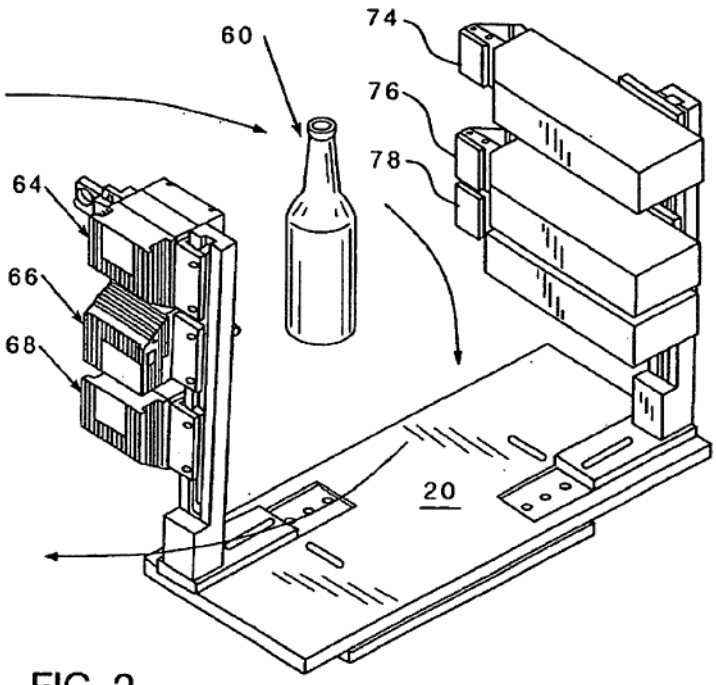

FIG. 2

B29C 51/00

Shaping by thermoforming {, i.e. shaping sheets or sheet like preforms after heating}, e.g. shaping sheets in matched moulds or by deep-drawing; Apparatus therefor {(blow moulding of tubular preforms B29C 49/00, deforming of tubular or hollow preforms B29C 67/0014)}

Definition statement

This place covers:

- shaping of materials in a plastic state by thermoforming

- simulation of thermoforming

- honeycomb structures sheets which are thermoformed with thermoplastic sheets surrounding it as long as the thermoplastic sheets are plastically deformed,

- plates or sheets which are clamped in such a way that they can at least partially slide into the mould when thermoformed

References

Informative references

Attention is drawn to the following places, which may be of interest for search:

Surface shaping	B29C 59/00
Cold deforming of thermoplastics material	B29C 67/0029
Self-reinforcing plastics	B29C 70/04
Metal deep-drawing	B21D 22/00

Packaging individual articles in containers or receptacles whereby the machines incorporate means for making the containers	B65B 3/022
Blister packaging	B65B 9/042
Blister packages	B65D 81/03

Special rules of classification

- For articles and materials, as much as possible additional classification by adding the Indexing Codes of B29K and B29L is recommended.

- If more then 4 different thermoplastic materials are described in the disclosure then the Indexing Code B29K 2101/12 should be allocated. In addition only up to 4 of the disclosed uncommon thermoplastic materials are classified (common thermoplastics for thermoforming are PET, PE, PP) by allocating the appropriate Indexing Code as provided in B29K 2001/00 - B29K 2101/00.

- Inventive and additional information disclosed in documents to be classified should be identified by allocation the appropriate classification codes of B29C 51/00 - B29C 51/46. In particular attention should be paid to the so called break down Indexing Codes, which are only present at additional information level, but should be allocated if disclosed in the document to be classified.

- If during thermoforming a vacuum, a vacuum and pressure or a pressure is used then one or both of the following classification codes should additionally be allocated: B29C 2791/006 and/or B29C 2791/007.

B29C 51/002

{characterised by the choice of material}

Definition statement

This place covers:

- Thermoforming processes, whereby their disclosure focuses on the materials or material parameters

References

Informative references

Attention is drawn to the following places, which may be of interest for search:

Compositions of macromolecular compounds in general	C08L 1/00 - C08L 101/10

Special rules of classification

If reinforcing material is comprised in the material to be thermoformed, then the following Indexing Codes should additionally be allocated: B29K 2201/00 - B29K 2313/02

B29C 51/004

{Textile or other fibrous material made from plastics fibres (combined with plastic layers B29C 51/145; compression moulding of reinforced plastic articles in matched moulds B29C 70/46; using pressure difference B29C 70/44)}

Definition statement

This place covers:

- Thermoforming of fabrics or textiles made of thermoplastic material. Fabrics or textiles can be woven or non woven.

References

Informative references

Attention is drawn to the following places, which may be of interest for search:

Shaping composites	B29C 70/00
Self-reinforcing plastics	B29C 70/04
Helmets	B29L 2031/48
Brassieres	B29L 2031/4885
Non-woven fabrics formed wholly or mainly of staple fibres or like relatively short fibres; Making three- dimensional articles by consolidation	D04H 1/005
Processes for the fixation or treatment of textile materials in three-dimensional forms	D06M 23/14

B29C 51/006

{for making articles having hollow walls}

Definition statement

This place covers:

-US2003026929

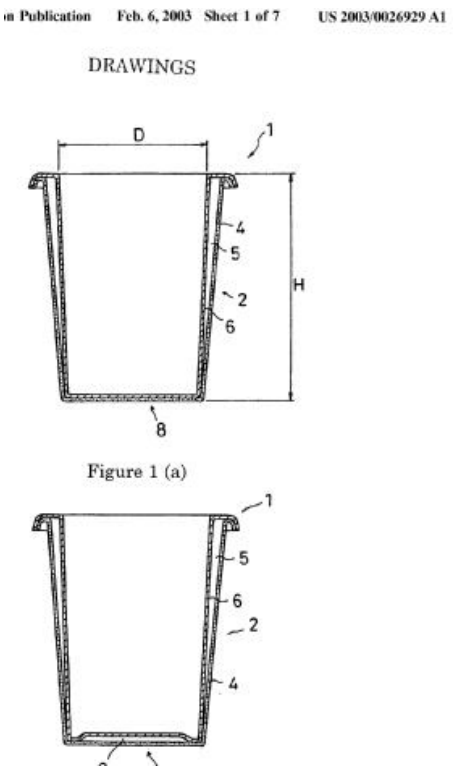

References

Informative references

Attention is drawn to the following places, which may be of interest for search:

Hollow walled articles	B29L 2024/00

B29C 51/008

{without using a mould, e.g. ballooning (as prestretching step B29C 51/06)}

Definition statement

This place covers:

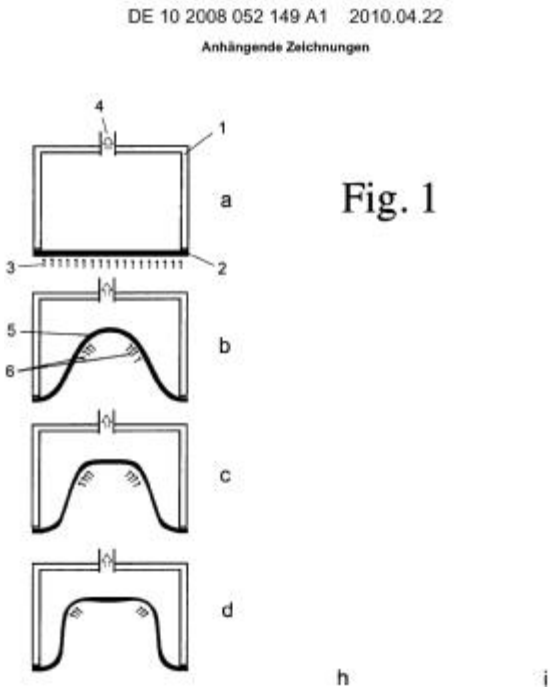

B29C 51/02

Combined thermoforming and manufacture of the preform

Definition statement

This place covers:

- EP2226181

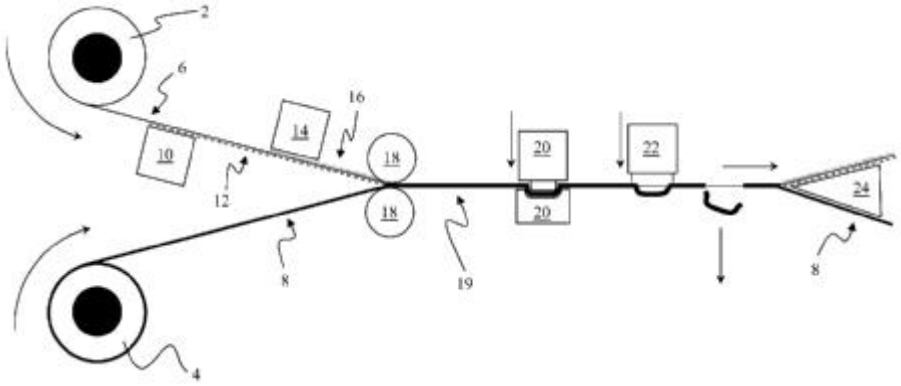

B29C 51/04

Combined thermoforming and prestretching, e.g. biaxial stretching

Definition statement

This place covers:

FIG. 3

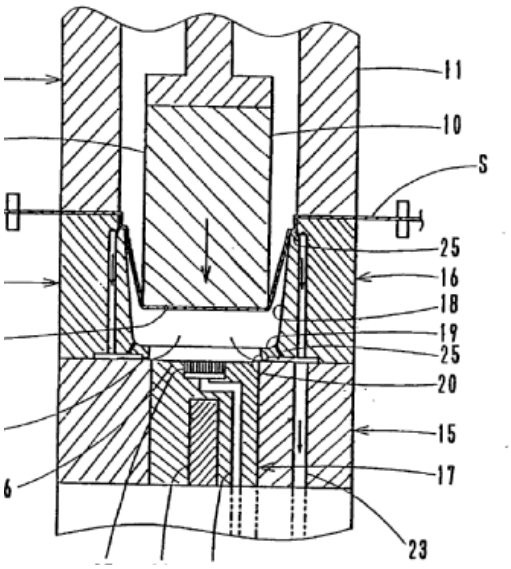

B29C 51/06

using pressure difference {for prestretching}

Definition statement

This place covers:

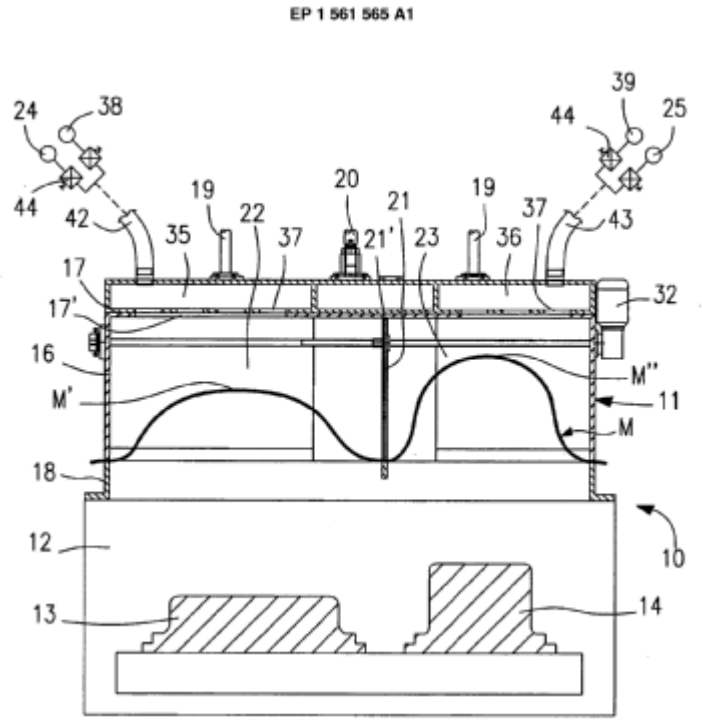

B29C 51/08

Deep drawing or matched-mould forming, i.e. using mechanical means only

Definition statement

This place covers:

- moulds without counter mould

Top of Form

DE102008025084

U.S. Patent Feb. 3, 1981 4,248,651

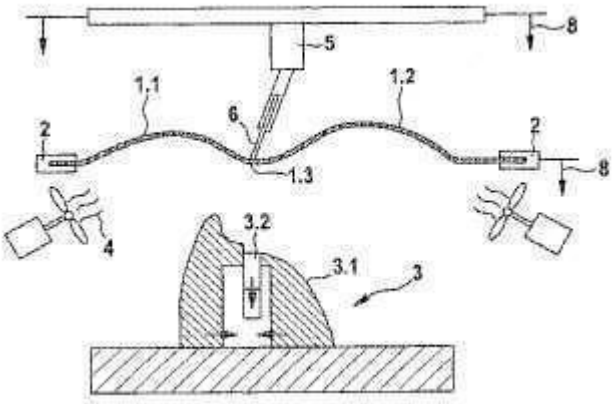

FIG. 1

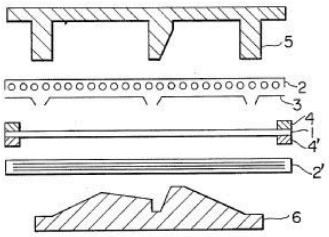

FIG. 2

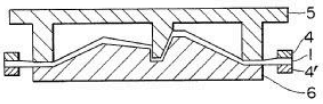

References

Limiting references

This place does not cover:

Mechanical deformation of paper or cardboard, e.g. deep drawing techniques	B31F 1/00

B29C 51/082

{by shaping between complementary mould parts}

Definition statement

This place covers:

- WO9728942

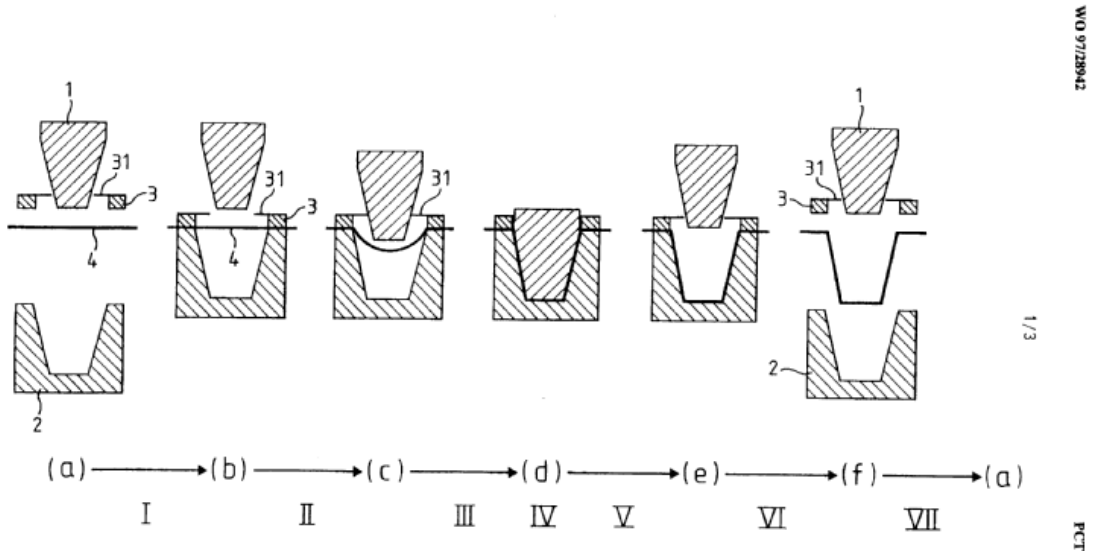

B29C 51/085

{with at least one of the shaping surfaces being made of resilien material, e.g. rubber}

Definition statement

This place covers:

- FR2640545

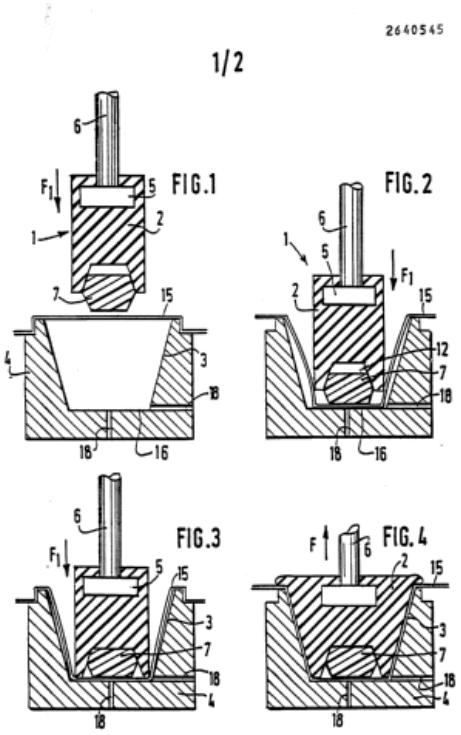

B29C 51/087

{with at least one of the mould parts comprising independently movable sections (B29C 51/32 and B29C 51/34 take precedence)}

Definition statement

This place covers:

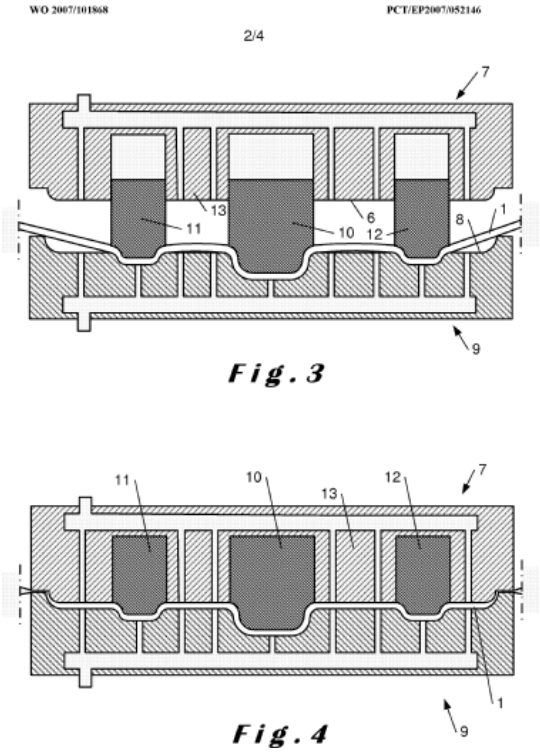

Fig. 3

Fig. 4

B29C 51/10

Forming by pressure difference, e.g. vacuum

Definition statement

This place covers:

EP 1 236 561 A1

FIG. 2

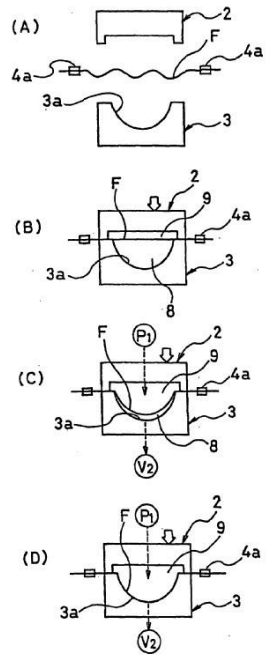

EP 1 114 715 A1

FIG. 1

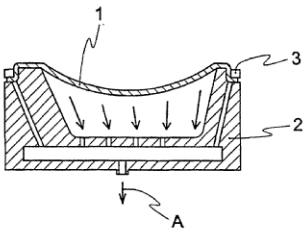

FIG. 2

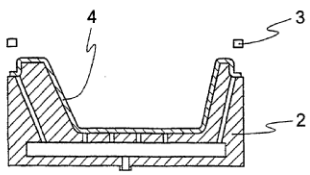

B29C 51/105

{Twin sheet thermoforming, i.e. deforming two parallel opposing sheets or foils at the same time by using one common mould cavity and without welding them together during thermoforming (B29C 51/267, B29C 49/0691 take precedence)}

Definition statement

This place covers:

-thermoforming processes, whereby two sheets are deformed at the same time by pressure or vacuum in one combined mould cavity, but they are not welded together either before or during the thermoforming operation

B29C 51/12

of articles having inserts or reinforcements

Definition statement

This place covers:

JP61193830

第 1 図

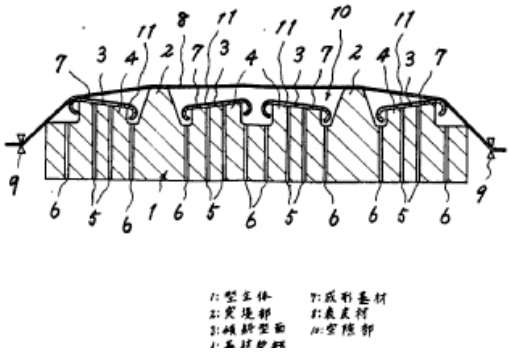

第 2 図

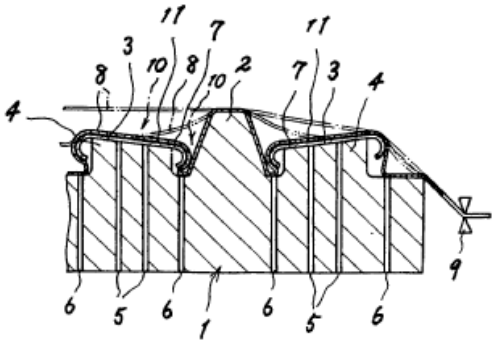

Special rules of classification

When details of inserts are indicated, then it is highly desirable to allocate additionally the following Indexing Codes for additional information:

- B29K 2601/00 - B29K 2713/02

B29C 51/14

using multilayered preforms or sheets

References

Informative references

Attention is drawn to the following places, which may be of interest for search:

Layered products comprising thermoplastic sheets per se	B32B 27/00

Special rules of classification

- Thermoformed articles which are decorated with paint or sheets with a paint layer are additionally classified by adding the Indexing Code: B29L 2031/722

B29C 51/16

Lining or labelling

Definition statement

This place covers:

Thermoforming process whereby the lining must be heated and deformed during the lining operation.

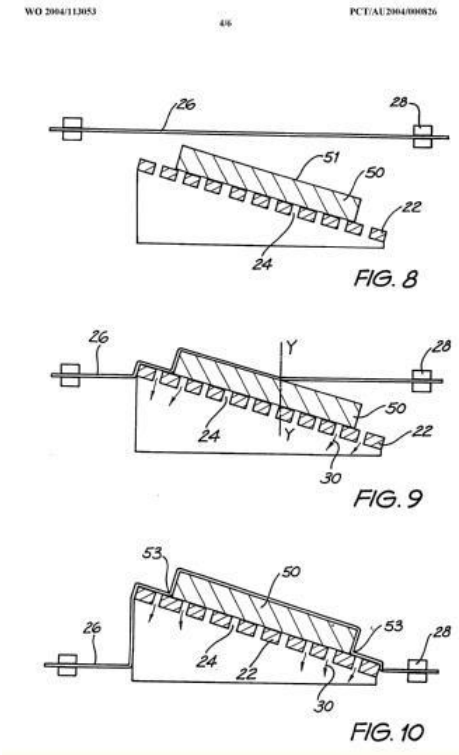

References

Informative references

Attention is drawn to the following places, which may be of interest for search:

Lining or sheathing in general	B29C 63/00
Producing of labels	B31D 1/02
Labelling in general, other then flat surfaces	B65C 3/00
In mould labelled containers	B65D 23/0864
Labels in general e.g. for thermo adhesion	G09F 3/04

Glossary of terms

In this place, the following terms or expressions are used with the meaning indicated:

Lining	Covering the whole outer and/or inner surface of articles with a heated thermoplastic sheet. The heated sheet is stretched and three dimensionally deformed.
Labelling	Connecting a label, which is for example on the inside of a mould cavity, to a heated preform or sheet while the preform or sheet is thermoformed. Often also called "in mould labelling

B29C 51/162

{of deep containers or boxes}

Definition statement

This place covers:

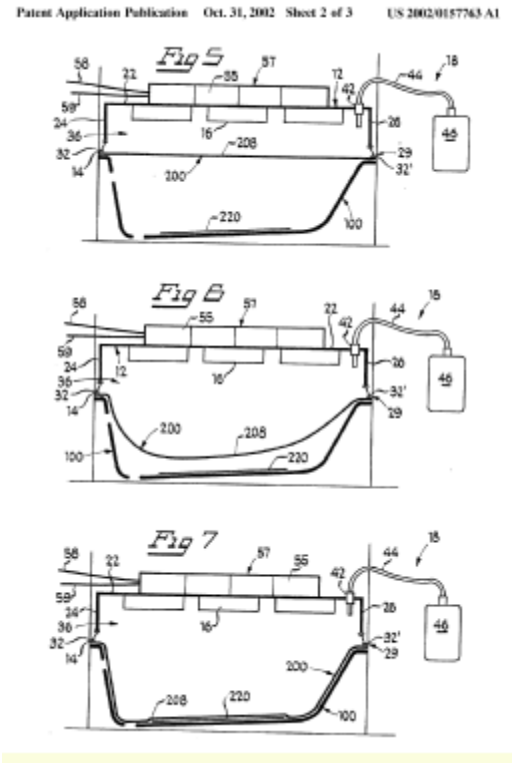

B29C 51/165

{combined with the feeding or the shaping of the lining or the labels (by injection moulding B29C 45/14008, B29C 45/1418)}

Definition statement

This place covers:

- FR2613982

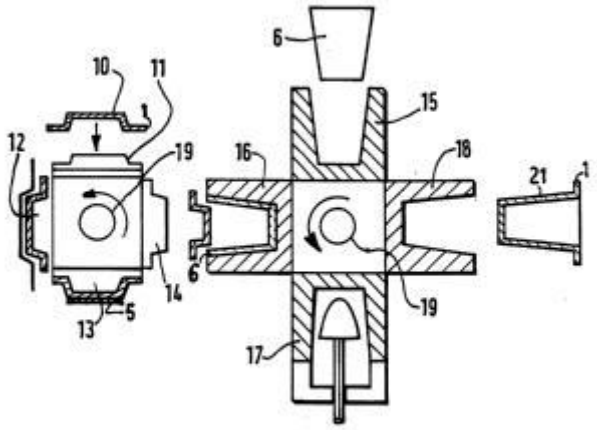

FIG.4

References

Informative references

Attention is drawn to the following places, which may be of interest for search:

Label feeding in general	B65C 9/08

B29C 51/167

{of a continuous strip}

Definition statement

This place covers:

- US2482558

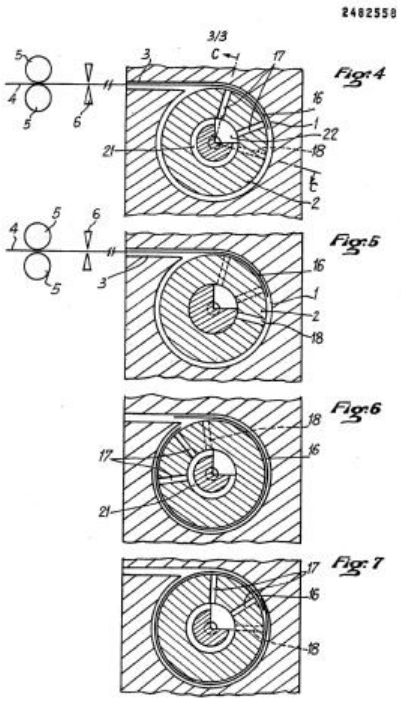

B29C 51/20

having movable moulds or mould parts

Definition statement

This place covers:

US4105736

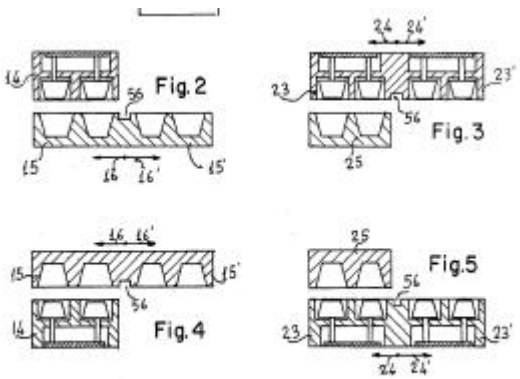

B29C 51/22

rotatable about an axis

Definition statement

This place covers:

- FR2911537

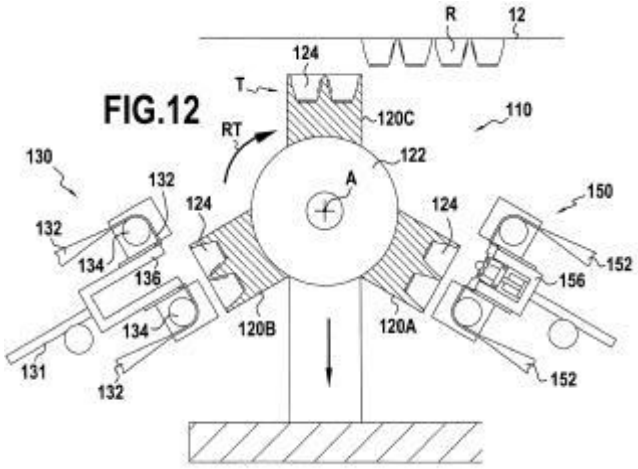

B29C 51/225

{mounted on a vacuum drum (for surface shaping B29C 59/06)}

Definition statement

This place covers:

- Vacuum, pressure or match mould deforming as long as it is mounted on a drum

-WO2004113073

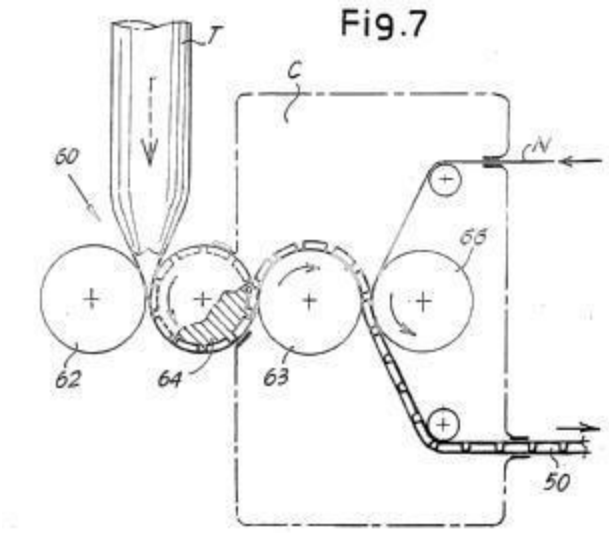

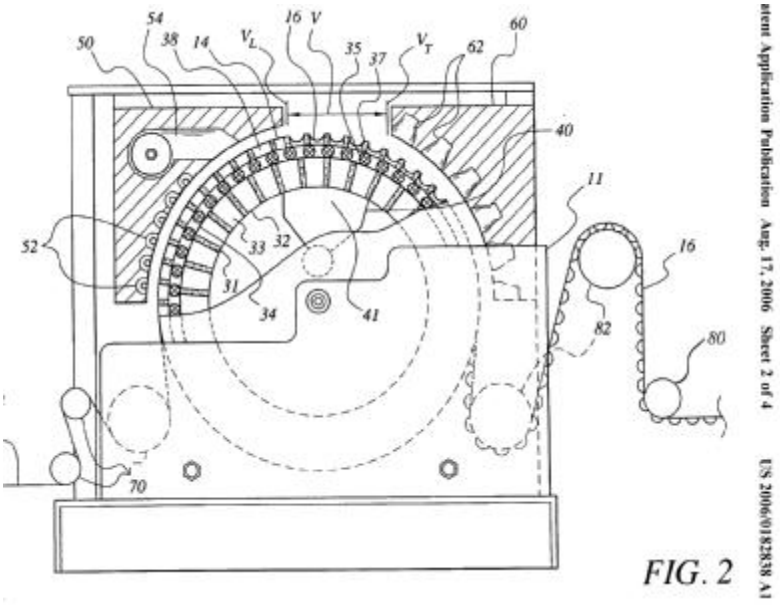

B29C 51/26

Component parts, details or accessories; Auxiliary operations

References

Informative references

Attention is drawn to the following places, which may be of interest for search:

Handling of moulds between a mould store and a moulding machine in general	B29C 31/006
Mounting, exchanging or centering of moulds	B29C 33/30
Maintenance of moulds namely cleaning	B29C 33/72
Sterilisation in general	A61L 2/00

B29C 51/261

{Handling means, e.g. transfer means, feeding means (B29C 51/44 takes precedence)}

Definition statement

This place covers:

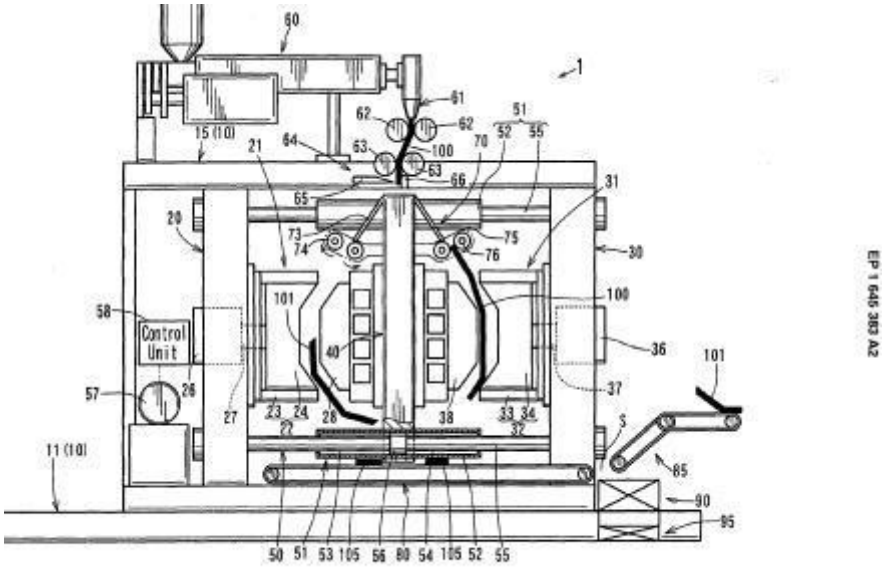

FIG. 6

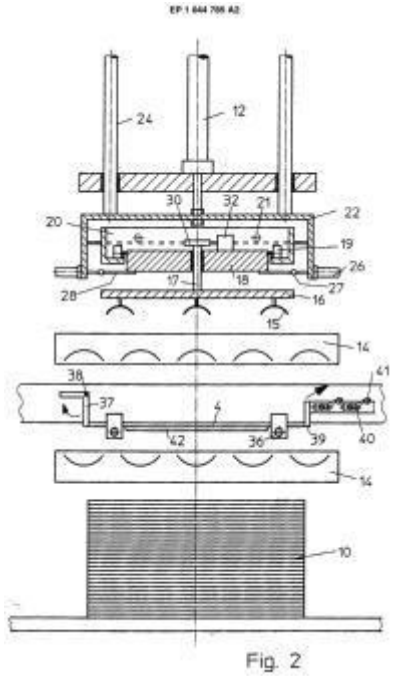

Fig. 2

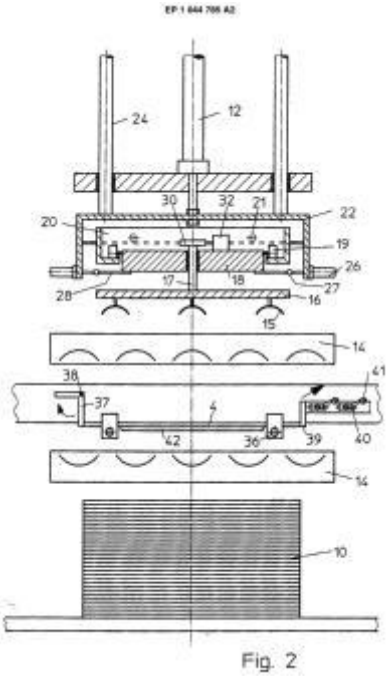

Fig. 2

- JP10305480

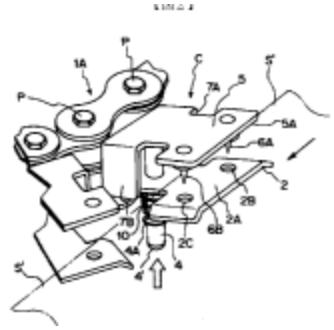

References

Informative references

Attention is drawn to the following places, which may be of interest for search:

Handling sheet like materials in general	B65G 47/00

B29C 51/262

{Clamping means for the sheets, e.g. clamping frames}

Definition statement

This place covers:

- GB2324268

FIG. 3

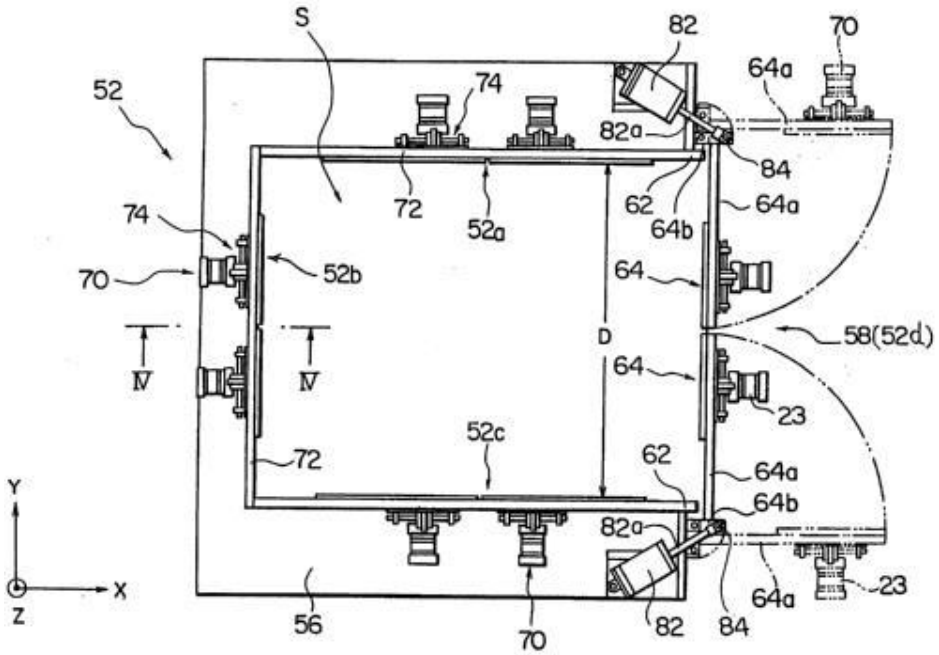

B29C 51/263

{characterised by using a particular environment, e.g. sterile}

Definition statement

This place covers:

e.g.:

- thermoforming in clean rooms

- using an incompressible fluid for thermoforming

References

Informative references

Attention is drawn to the following places, which may be of interest for search:

Method or apparatus for sterilising in general	A61L 2/00
Cleaning in general	B08B 1/00

B29C 51/28

for applying pressure through the wall of an inflated bag or diaphragm

Definition statement

This place covers:

- GB2049535

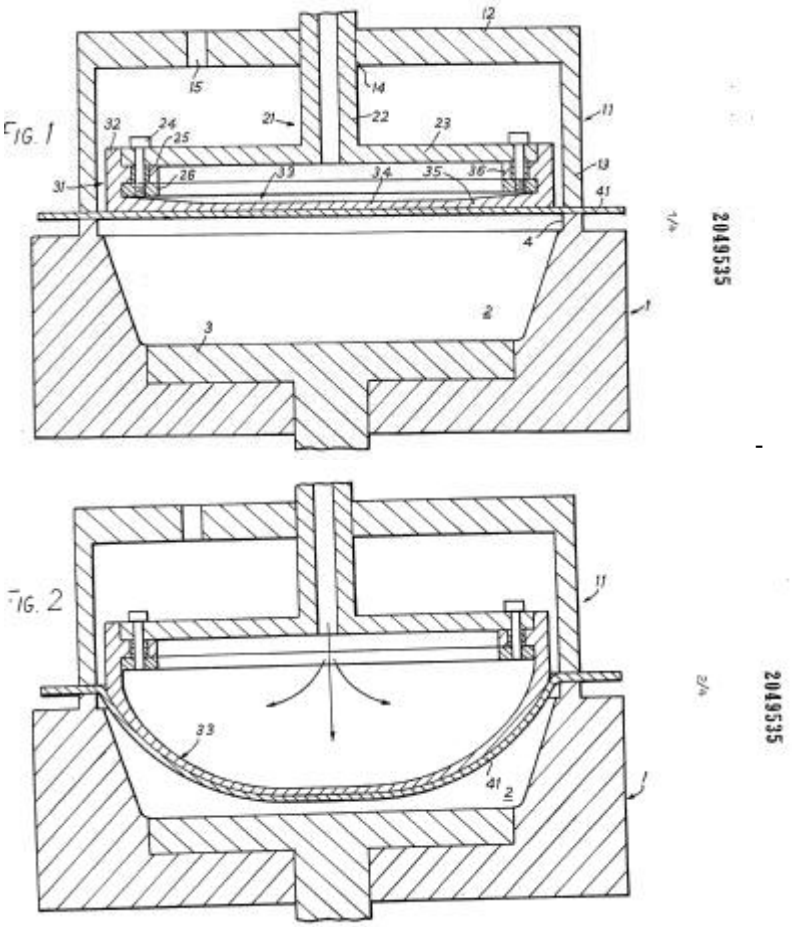

References

Informative references

Attention is drawn to the following places, which may be of interest for search:

Isostatic pressing in compression moulding	B29C 43/10

B29C 51/30

Moulds

References

Informative references

Attention is drawn to the following places, which may be of interest for search:

Moulds in general characterised by the material or the manufacturing process	B29C 33/38 - B29C 33/405

B29C 51/303

{with sealing means or the like}

Definition statement

This place covers:

- US3238566

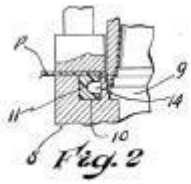

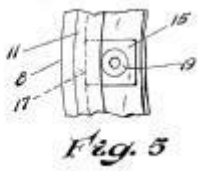

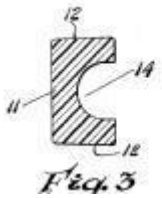

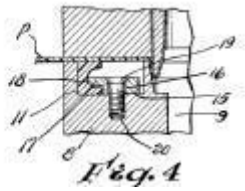

B29C 51/306

{with means for forming a rim (combined with cutting B29C 51/325; rim rolling per se B29C 53/34)}

Definition statement

This place covers:

Top of Form

- GB2187129

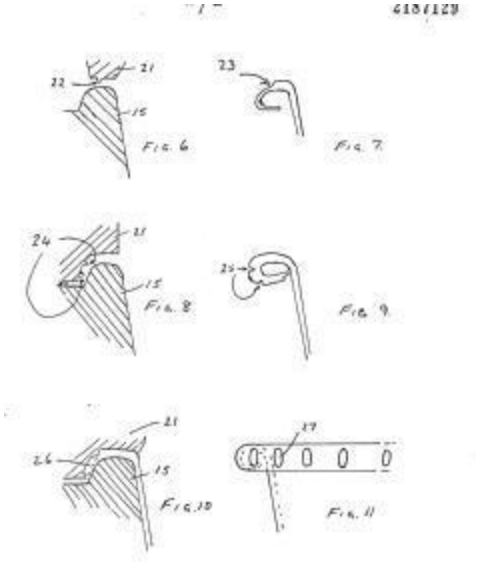

US5641379

FIG. 6

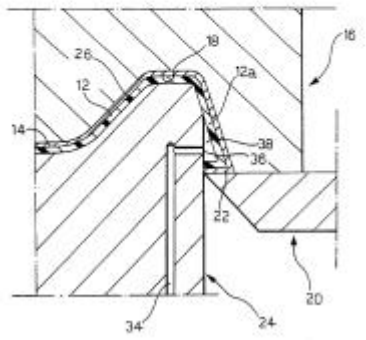

B29C 51/34

for undercut articles

Definition statement

This place covers:

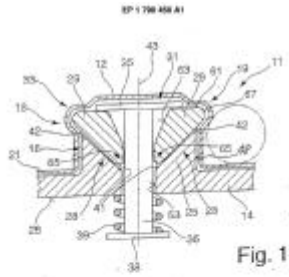

Fig. 1

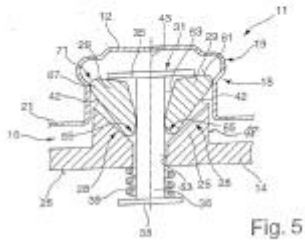

Fig. 5

B29C 51/343

{having recessed undersurfaces}

Definition statement

This place covers:

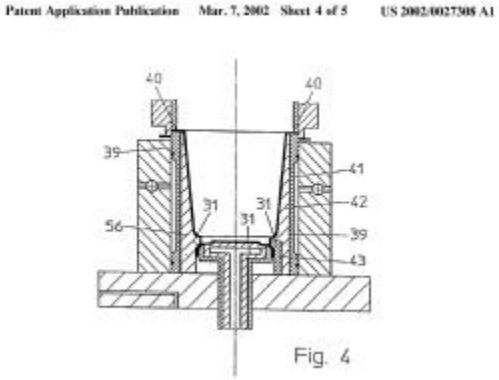

Fig. 4

B29C 51/346

{specially adapted to facilitate the destacking of nestable containers}

Definition statement

This place covers:

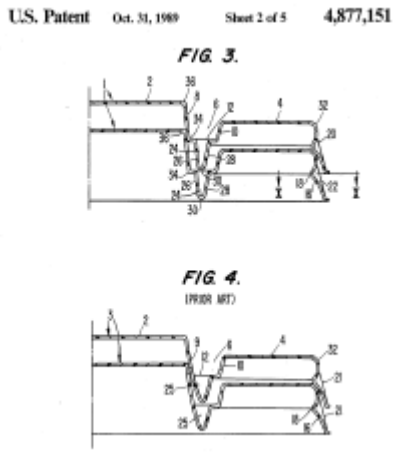

B29C 51/36

specially adapted for vacuum forming {, Manufacture thereof}

Definition statement

This place covers:

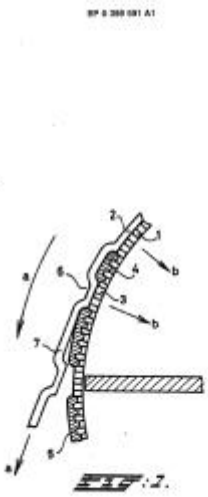

B29C 51/365

{Porous moulds}

Definition statement

This place covers:

- Microporous or sintered moulds

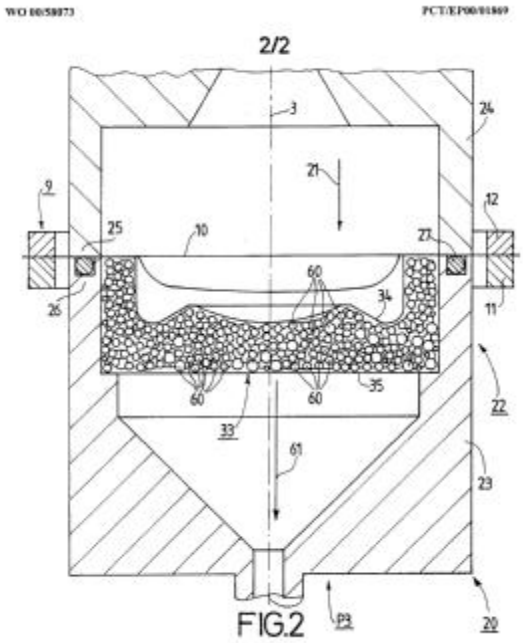

FIG.2

B29C 51/38

Opening, closing or clamping means

Definition statement

This place covers:

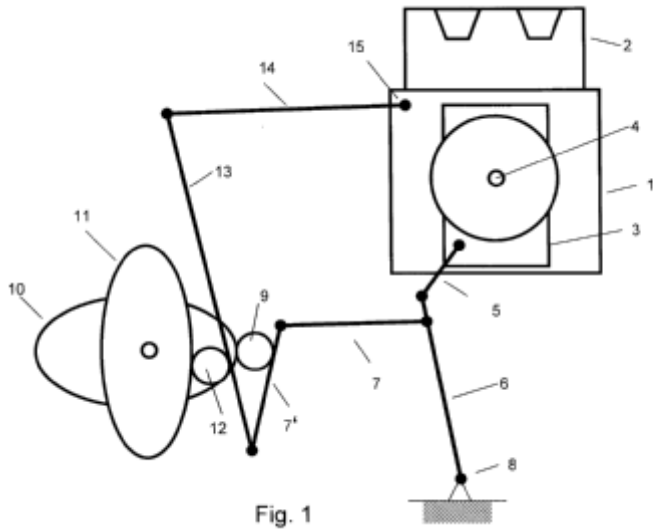

Fig. 1

DE 10 2006 003 851 A1 2007.08.02
Anhängende Zeichnungen

References

Informative references

Attention is drawn to the following places, which may be of interest for search:

Opening, closing or clamping of moulds in general	B29C 33/20 - B29C 33/28

B29C 51/40

Venting means

Definition statement

This place covers:

- DE29908024U

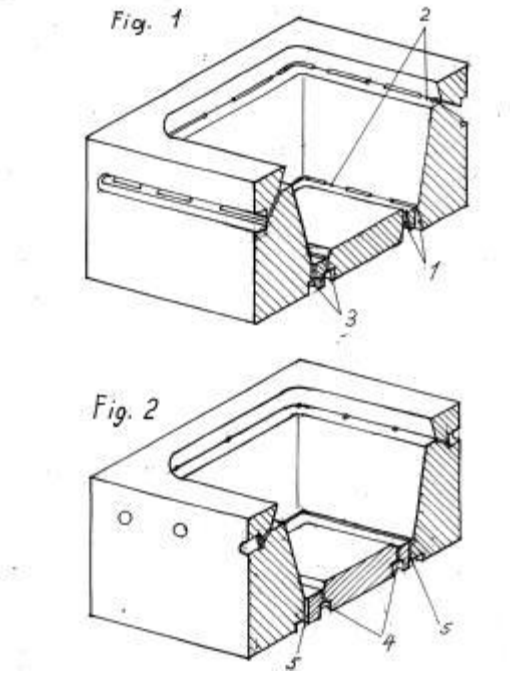

References

Informative references

Attention is drawn to the following places, which may be of interest for search:

Venting means for moulds in general	B29C 33/10

B29C 51/42

Heating or cooling

References

Informative references

Attention is drawn to the following places, which may be of interest for search:

Heating, cooling or curing in general	B29C 35/00

Heating of preforms in general	B29B 13/023

Special rules of classification

When details of the heating or cooling means are indicated, then it is highly desirable to allocate additionally the following corresponding Indexing Codes for additional information:

- B29C 35/02, B29C 35/04 - B29C 2035/0883

- B29C 35/16, B29C 2035/1616 - B29C 2035/1691

Synonyms and Keywords

In patent documents, the following words/expressions are often used as synonyms:

- "glass transition temperature", "Tg" and "vitreous transition temperature"

B29C 51/421

{of preforms, specially adapted for thermoforming (preheating sheets in general B29B 13/023; B29C 51/427 takes precedence)}

Definition statement

This place covers:

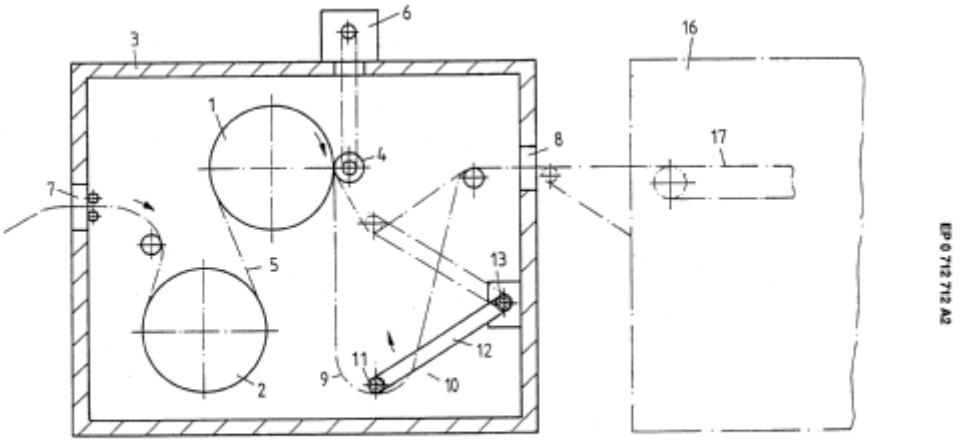

Fig. 1

B29C 51/422

{to produce a temperature differential (B29C 51/426 takes precedence)}

Definition statement

This place covers:

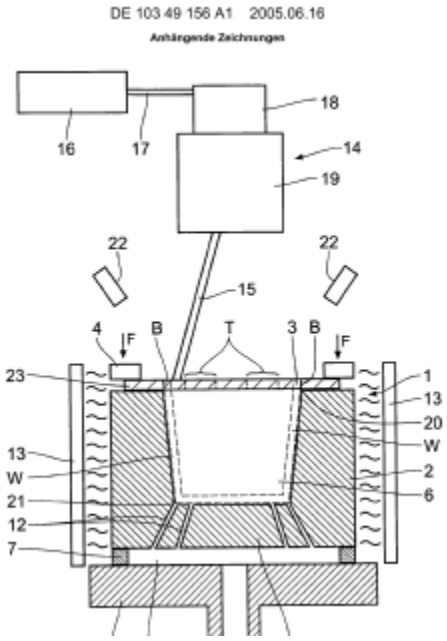

B29C 51/423

{through the thickness of the preform}

Definition statement

This place covers:

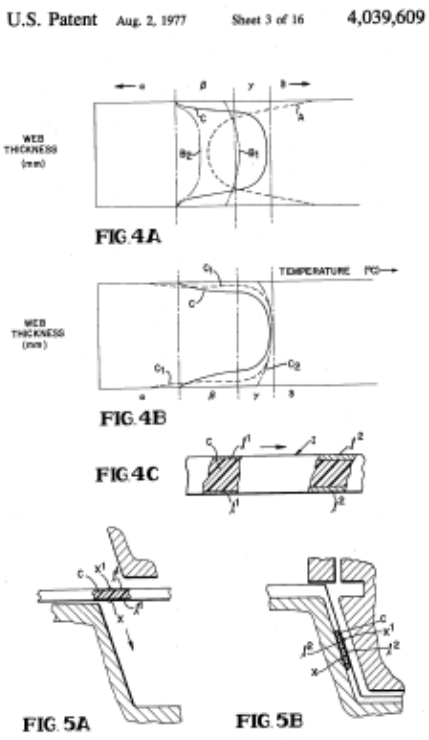

B29C 51/424

{using a heated fluid}

Definition statement

This place covers:

- WO2005007386

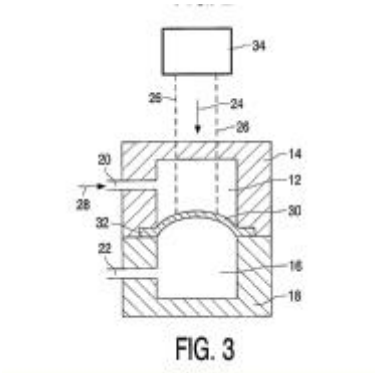

B29C 51/425

{using movable heating devices}

Definition statement

This place covers:

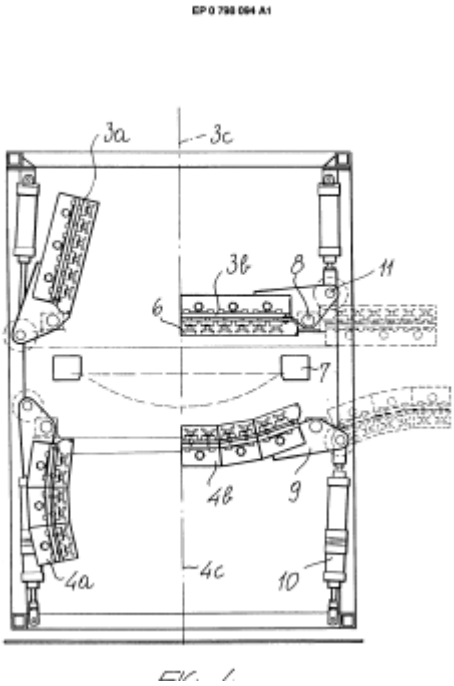

FIG. 1

B29C 51/427

{Cooling of the material with a fluid blast}

Definition statement

This place covers:

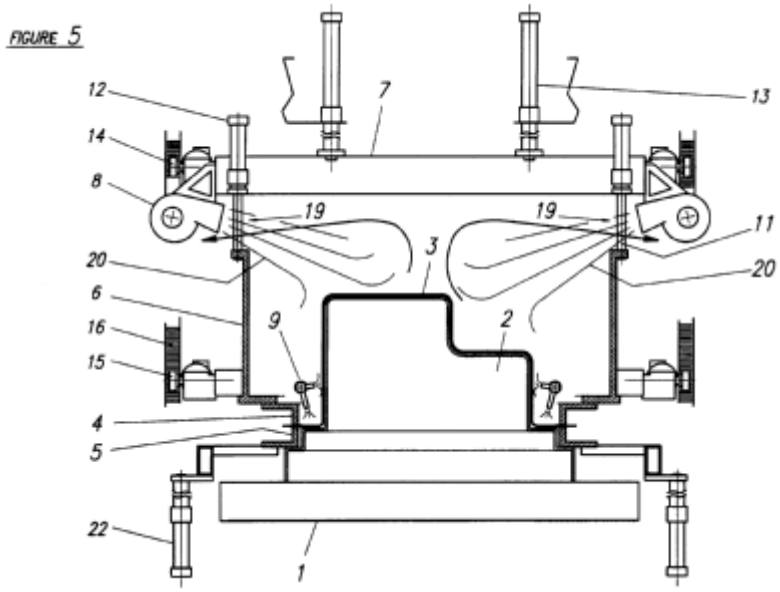

B29C 51/428

{of moulds or mould parts}

Definition statement

This place covers:

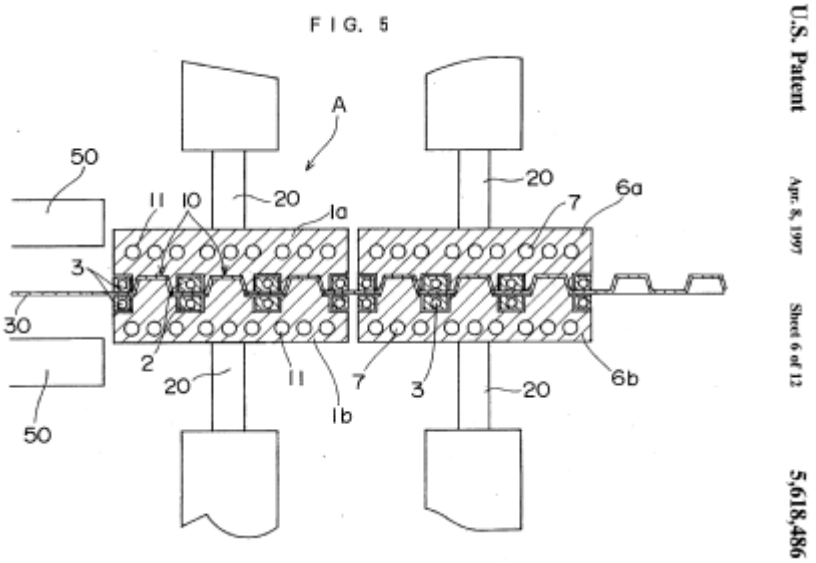

References

Informative references

Attention is drawn to the following places, which may be of interest for search:

Heating or cooling of moulds in general	B29C 33/02 - B29C 33/08

Special rules of classification

- If the heating or cooling system applied in the thermoforming mould is of general interest, then additional classification in the general groups B29C 33/02 - B29C 33/08 is recommended.

B29C 51/44

Removing or ejecting moulded articles

Definition statement

This place covers:

Contains also stacking of articles

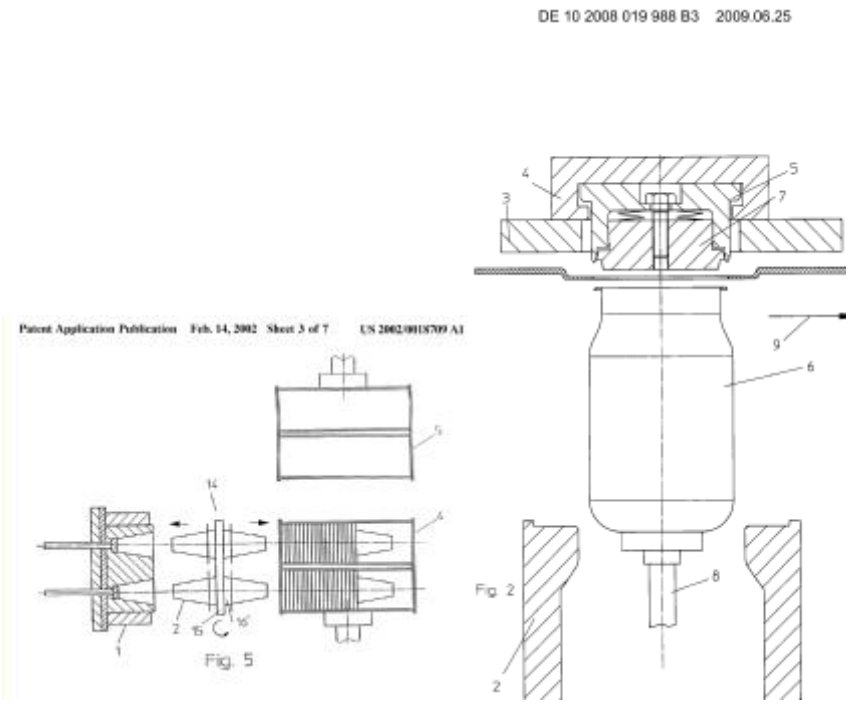

References

Informative references

Attention is drawn to the following places, which may be of interest for search:

Moulds with means for to facilitate the removal of articles	B29C 33/44
Stacking of nested articles	B65G 57/165

B29C 51/445

{from a support after moulding, e.g. by cutting}

Definition statement

This place covers:

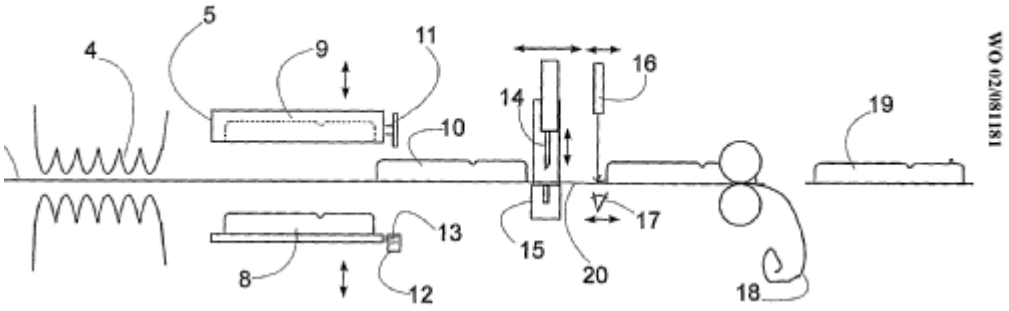

B29C 53/00

Shaping by bending, folding, twisting, straightening or flattening; Apparatus therefor (B29C 61/10 takes precedence)

References

Informative references

Attention is drawn to the following places, which may be of interest for search:

Lining or sheathing by winding sheet or web-like material helically	B29C 63/08
Lining or sheathing by winding sheet or web-like material spirally	B29C 63/12
Covering or wrapping cores by winding webs, tapes or filamentary material	B65H 81/00

B29C 53/18

of plates or sheets

References

Informative references

Attention is drawn to the following places, which may be of interest for search:

Apparatus for taking-out curl from webs	B65H 23/34

B29C 53/56

Winding and joining, e.g. winding spirally {(winding in general B65H)}

Glossary of terms

In this place, the following terms or expressions are used with the meaning indicated:

Spirally	the successive turns are completely overlapping each other

Helically	the successive turns are partially overlapping each other

B29C 55/00

Shaping by stretching, e.g. drawing through a die; Apparatus therefor (B29C 61/08 takes precedence)

Definition statement

This place covers:

Documents describing shaping by stretching, drawing, orienting polymeric articles like films, sheets, webs, tapes, ribbons, bands, strips, slabs, plates, plaques, boards, tubes, hoses etc.

The subgroups define the mechanical and geometrical ways in which stretching is performed.

References

Limiting references

This place does not cover:

Manufacture of films or sheets characterised by the chemical composition	C08J 5/18
Stretching of fibres, filaments, threads and the like and of textile fabrics	D01D, D06C

Informative references

Attention is drawn to the following places, which may be of interest for search:

Membranes produced by stretching	B01D 67/0025
Producing films characterised by special physical or application properties (e.g. translucent films for light diffusion)	B29D 7/01
Film laminates	B32B 27/00
Stretch wrapping	B65B 11/00

B29C 57/00

Shaping of tube ends, e.g. flanging, belling or closing; Apparatus therefor {, e.g. collapsible mandrels}

References

Limiting references

This place does not cover:

Shaping a tube locally and then cutting in the deformed area, so that two tubes with shaped ends are obtained	B29C 67/0014

Informative references

Attention is drawn to the following places, which may be of interest for search:

Forming the tip of catheters	A61M 25/001
Altering the diameter of tube ends	B21D 41/00

Shaping paper or cardboard tube ends	B31F 1/008

B29C 59/00

Surface shaping {of articles}, e.g. embossing; Apparatus therefor {(in-mould printing B29C 37/0025; by using liquids B29C 71/0009; by using gases without chemical reaction B29C 71/009; for decorating in general B44; abrasive blasting B24C; chemical aspects C08J 7/00)}

References

Limiting references

This place does not cover:

Photomechanical, e.g. photolithographic, production of textured or patterned surfaces, e.g. printing surfaces, lithographic processes using patterning methods other than those involving the exposure to radiation, e.g. by stamping	G03F 7/0002

Informative references

Attention is drawn to the following places, which may be of interest for search:

Moulding articles characterized by the shape of the surface	B29C 37/0053
Shapping composites, comprising fillers only, the filler influencing the surface characteristics of the material, e.g. by concentrating near the surface or by incorporating in the surface by force	B29C 70/64
Absorbent pads, characterised by the outer layer being three-dimensional, e.g. embossed, textured	A61F 13/51476
Producing rollers or cylinders having an axial length of several times the diameter, e.g. for embossing, pressing or printing	B29D 99/0035
Basic electric elements such as spark gaps; overvoltage arresters using spark gaps; sparking plugs; corona devices	H01T
Plasma technique	H05H

B29C 59/002

{Component parts, details or accessories; Auxiliary operations}

References

Limiting references

This place does not cover:

incorporation of release agents in the material to be embossed	B29C 59/005

Informative references

Attention is drawn to the following places, which may be of interest for search:

using lubricants during embossing	B29C 2037/92

B29C 59/005

{characterised by the choice of material}

Definition statement

This place covers:

incorporation of release agents in the material to be embossed

B29C 59/007

{Forming single grooves or ribs, e.g. tear lines, weak spots (by moulding B29C 37/0057; folding lines B29C 53/06; in metal articles B21D 17/00; by cutting B26D 3/08)}

Definition statement

This place covers:

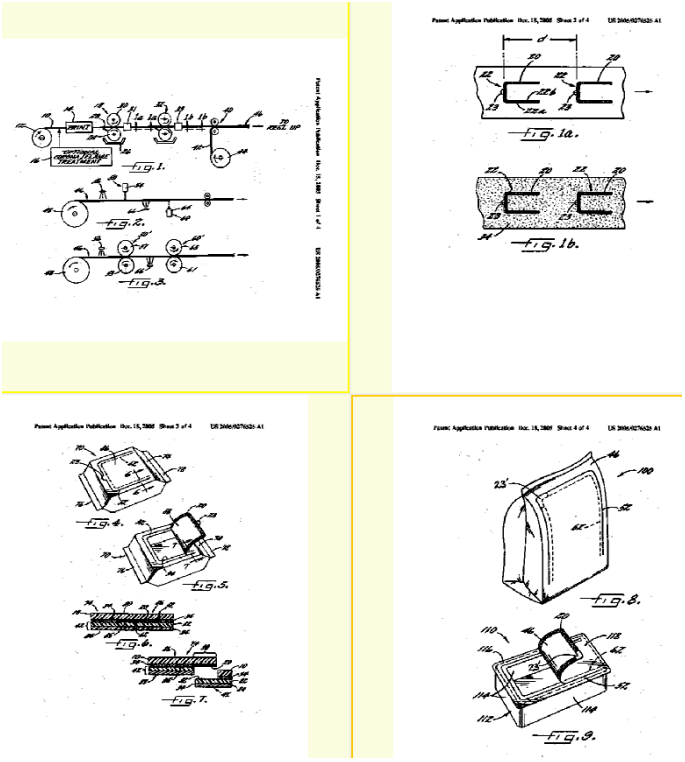

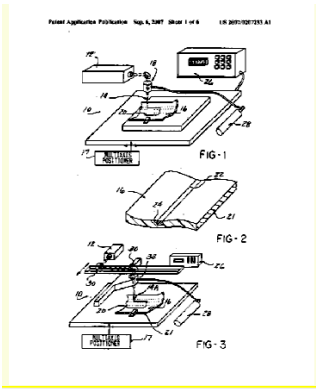
FIG - 1
FIG - 2
FIG - 3

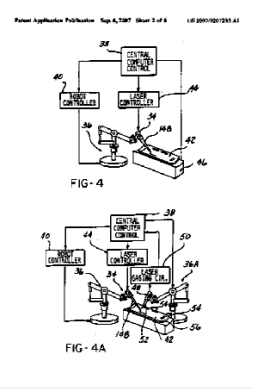
FIG - 4
FIG - 4A

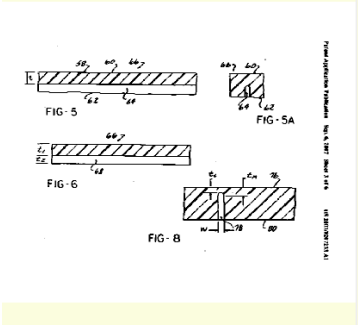
FIG - 5
FIG - 5A
FIG - 6
FIG - 8

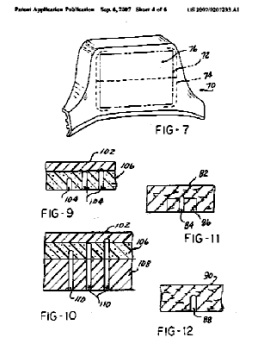
FIG - 7
FIG - 9
FIG - 11
FIG - 10
FIG - 12

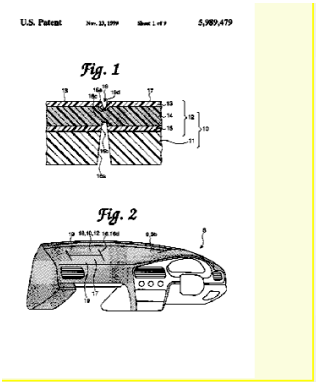
U.S. Patent
Fig. 1
Fig. 2

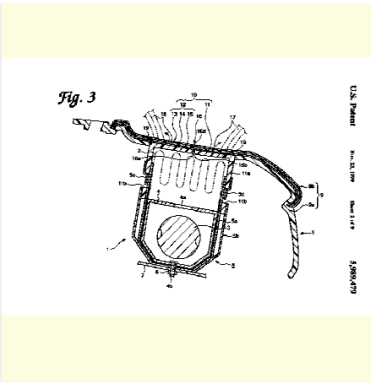
Fig. 3

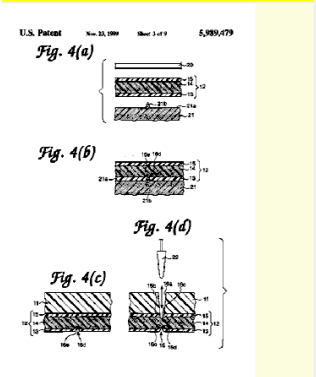
U.S. Patent
Fig. 4(a)
Fig. 4(b)
Fig. 4(d)
Fig. 4(c)

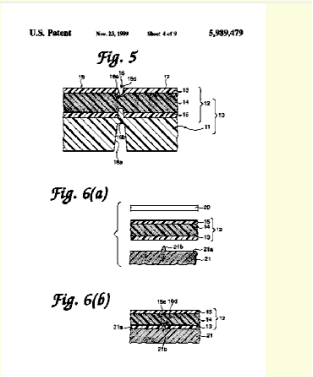
U.S. Patent
Fig. 5
Fig. 6(a)
Fig. 6(b)

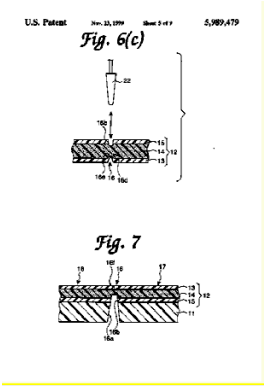
U.S. Patent
5,989,479
Fig. 6(c)
Fig. 7

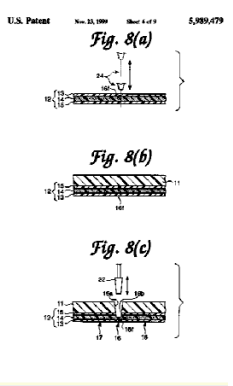
U.S. Patent
5,989,479
Fig. 8(a)
Fig. 8(b)
Fig. 8(c)

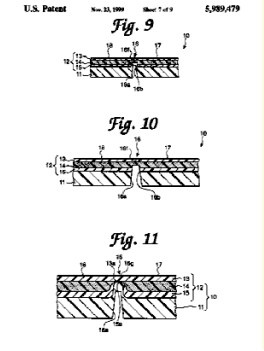
U.S. Patent
5,989,479
Fig. 9
Fig. 10
Fig. 11

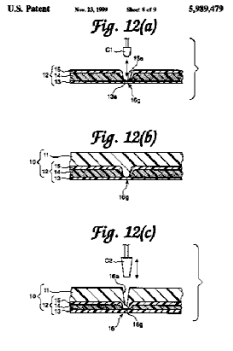
U.S. Patent
5,989,479
Fig. 12(a)
Fig. 12(b)
Fig. 12(c)

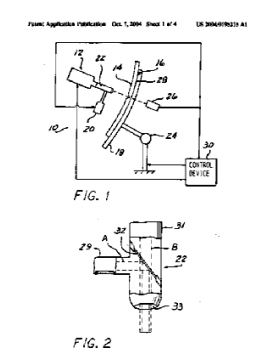
CONTROL DEVICE
FIG. 1
FIG. 2

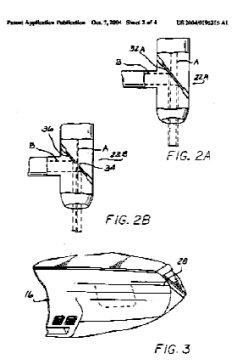
FIG. 2A
FIG. 2B
FIG. 3

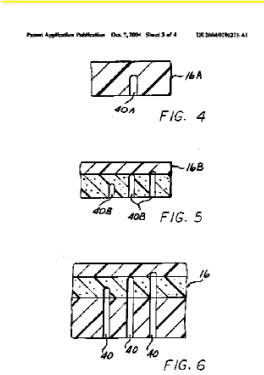
FIG. 4
FIG. 5
FIG. 6

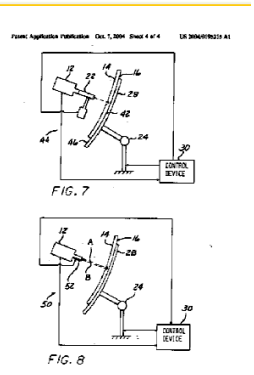
CONTROL DEVICE
FIG. 7
FIG. 8

Patent Application Publication Aug. 23, 2007 Sheet 5 of 5 US 2007/0197363 A1

FIG. 5

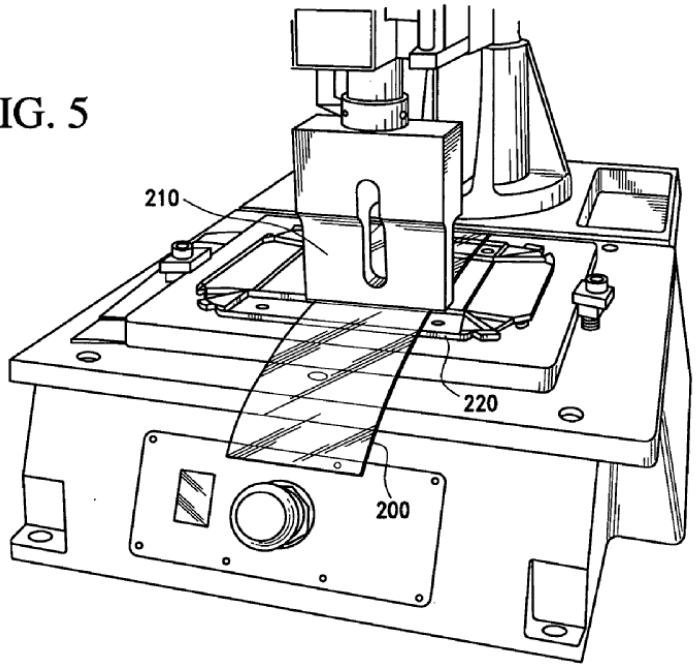

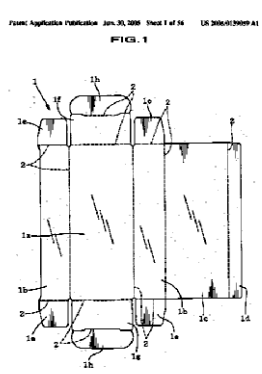

FIG. 1

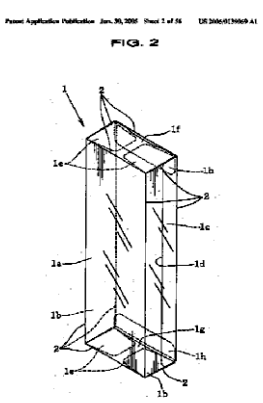

FIG. 2

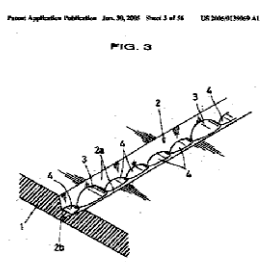

FIG. 3

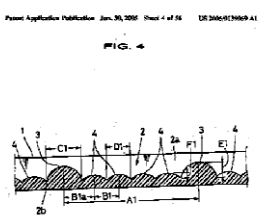

FIG. 4

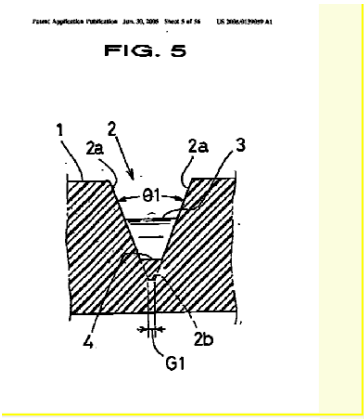

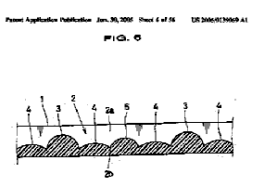

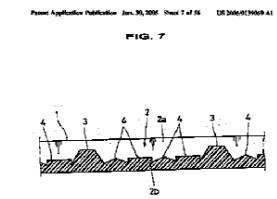

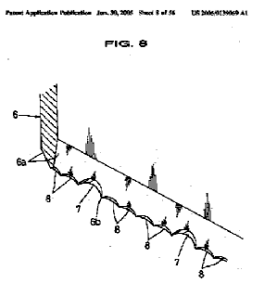

References

Limiting references

This place does not cover:

Working by laser beam, removal material, plastics	B23K 26/402
Cutting work, making a superficial cut in the surface of the work without removal of material, e.g. scoring, incising	B26D 3/085

Informative references

Attention is drawn to the following places, which may be of interest for search:

Moulding articles characterised by the shape of the surface; moulding single grooves or ribs, e.g. tear lines	B29C 37/0057
Vehicles, arrangements for storing air bag modules, characterised by a tear line for defining a deployment opening	B60R 21/2165
Packages comprising tear-lines provided in a wall portion	B65D 75/5827

B29C 59/02

by mechanical means, e.g. pressing {(B29C 59/007 takes precedence; embossing expanded porous articles B29C 44/5627)}

Definition statement

This place covers:

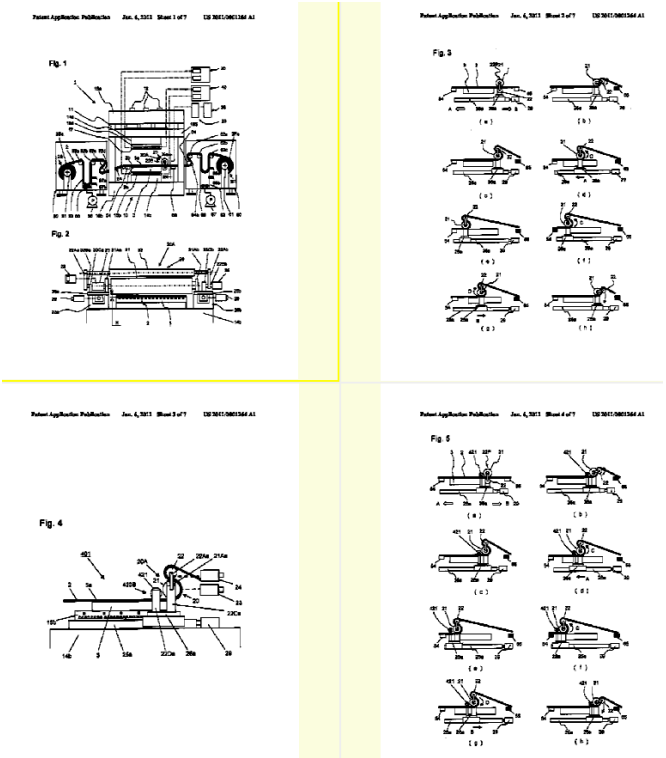

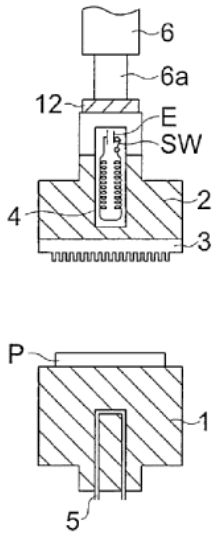

FIG. 14a

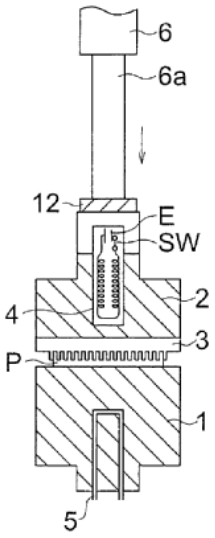

FIG. 14b

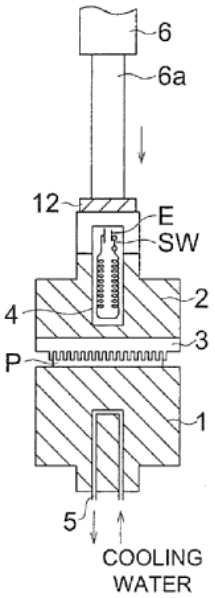

FIG. 14c

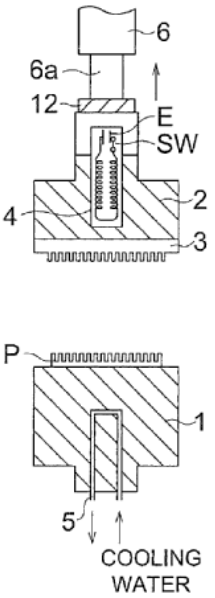

FIG. 14d

Patent Application Publication Feb. 25, 2010 Sheet 10 of 10 US 2010/0044898 A1

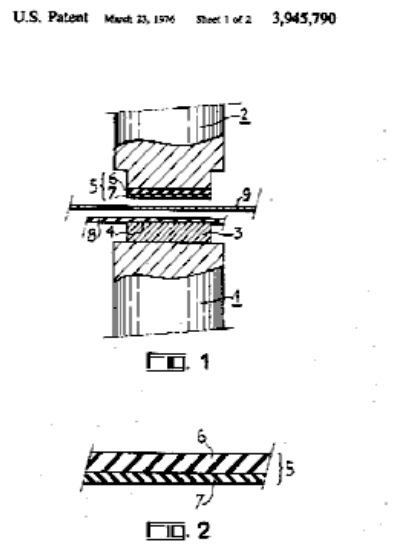

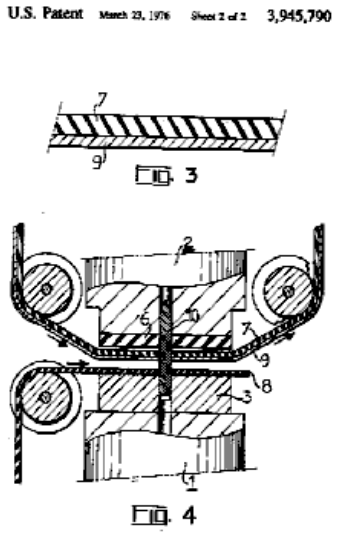

References

Limiting references

This place does not cover:

Apparatus or machines for carrying out printing operations with other operations, with embossing	B41F 19/02
Inking and printing with a printer's forme combined with embossing	B41M 1/24
Machines or apparatus for embossing decorations or marks, dies	B44B 5/026
Machines or apparatus for embossing decorations or marks, heated dies	B44B 5/028
Artists' hand tool for embossing	B44B 11/04

Processes for producing decorative surface effects, pressing or stamping ornamental designs on surfaces	B44C 1/24
Processes for producing ornamental structures, stamping	B44C 3/08

Informative references

Attention is drawn to the following places, which may be of interest for search:

Moulds or cores characterized by the shape of the moulding surface, e.g. ribs, grooves	B29C 33/42
Shaping by casting, making articles of definite length characterised by the shape of the surface	B29C 39/026
Compression moulding of article of definite length chatracterised by the shape of the surface	B29C 43/021
Shaping by swelling, foaming, after-treatment of articles, by mechanical deformation, e.g. embossing	B29C 44/5627
Injection moulding, mould cavity walls provided with means for marking or patterning	B29C 45/372
Blow moulding moulds having decorating or printing means	B29C 49/52
Processes for manufacturing semi-permeable membranes; after-treatment of organic or inorganic membranes; mechanical after-treatment	B01D 67/0086
Mechanical deformation of paper or cardboard, embossing	B31F 1/07

B29C 59/021

{of profiled articles, e.g. hollow or tubular articles, beams}

Definition statement

This place covers:

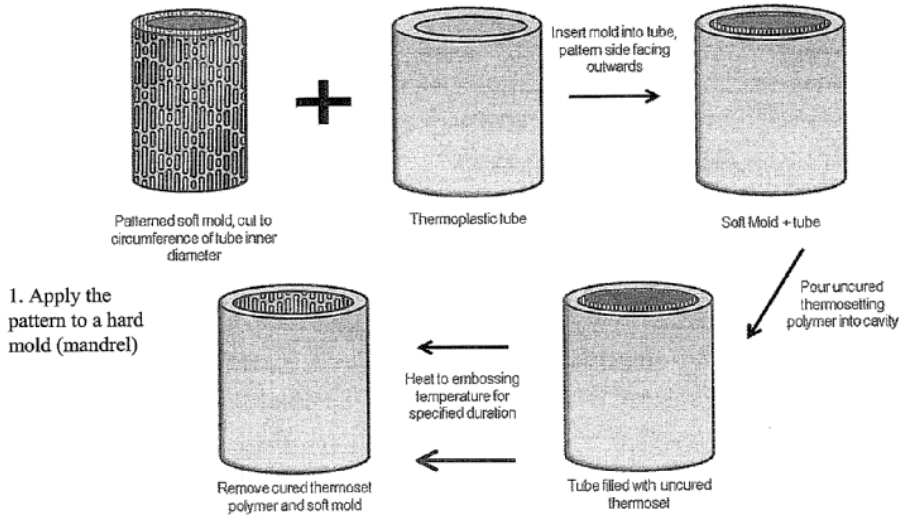

Figure 7

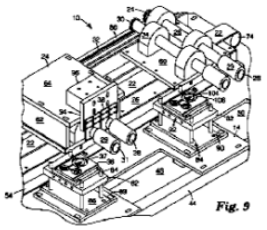

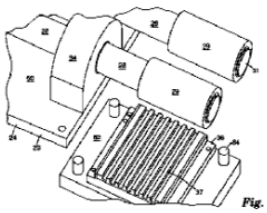

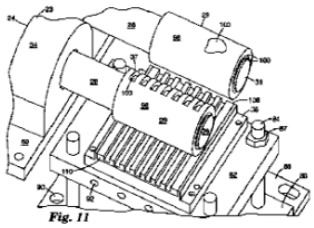

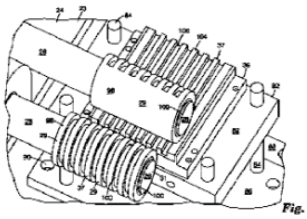

FIG. 1
PRIOR ART

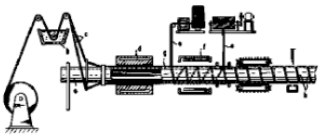

FIG. 2
PRIOR ART

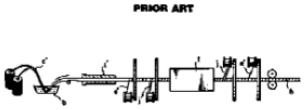

FIG. 3
PRIOR ART

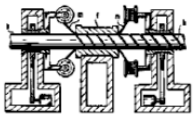

FIG. 4

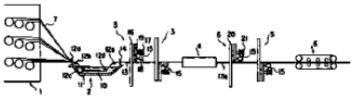

FIG. 12



FIG. 13



FIG. 14

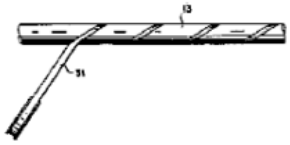

FIG. 15A



FIG. 15B



FIG. 15C



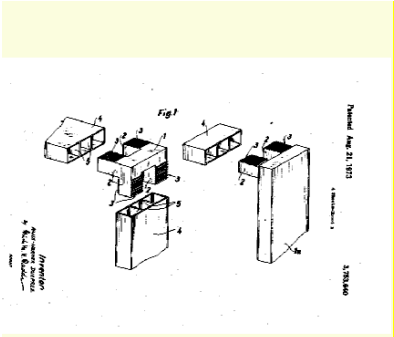
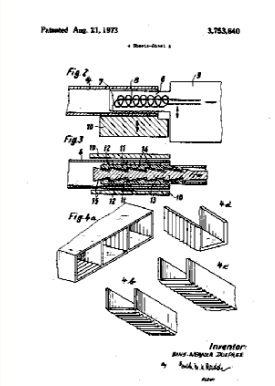
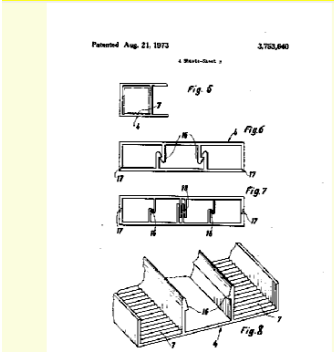
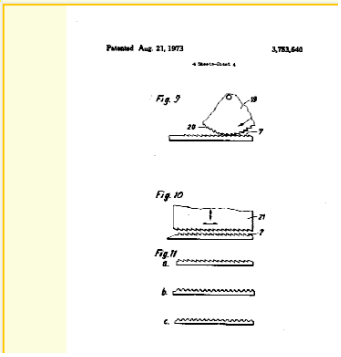
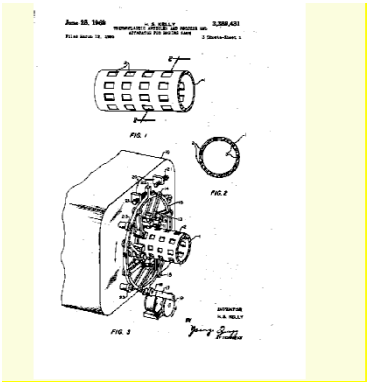
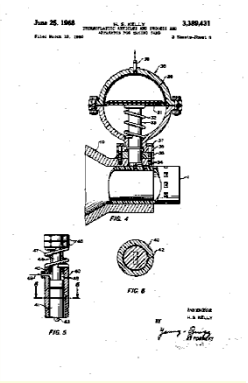
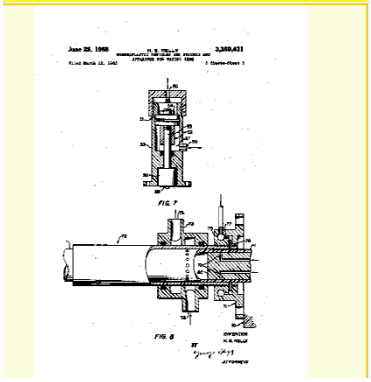

References

Informative references

Attention is drawn to the following places, which may be of interest for search:

Extrusion moulding, producing hollow articles characterised by the shape of the surface, e.g. rough, irregular	B29C 48/002

B29C 59/022

{characterised by the disposition or the configuration, e.g. dimensions, of the embossments or the shaping tools therefor}

Definition statement

This place covers:

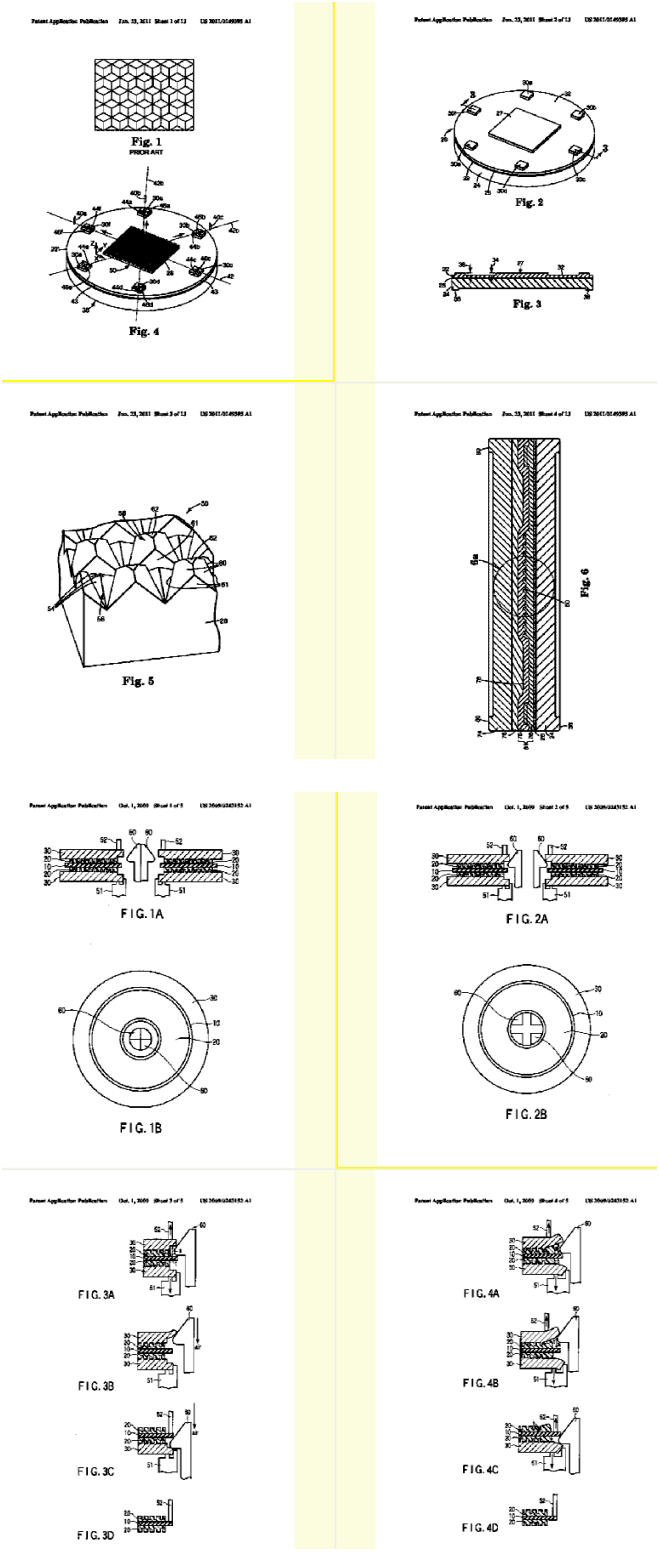

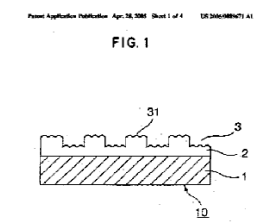
FIG. 1
31
3
2
1
10

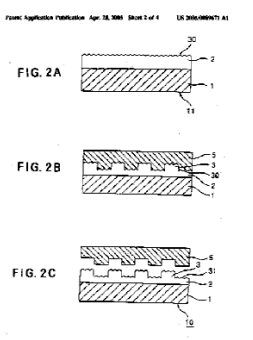
FIG. 2A
FIG. 2B
FIG. 2C

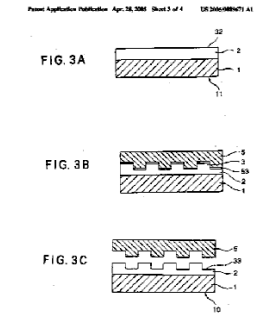
FIG. 3A
FIG. 3B
FIG. 3C

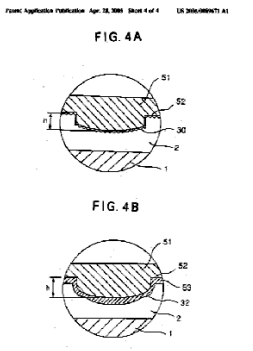
FIG. 4A
FIG. 4B

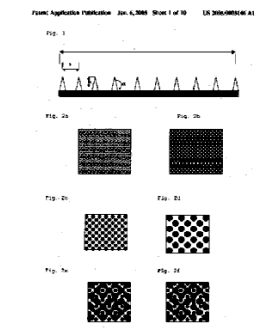

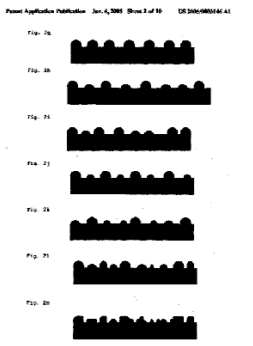

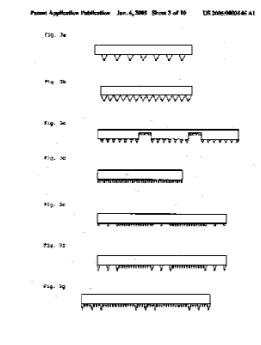

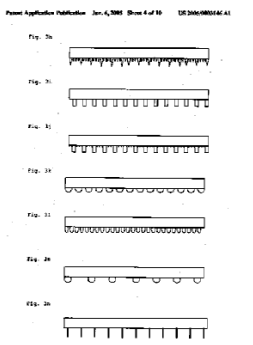

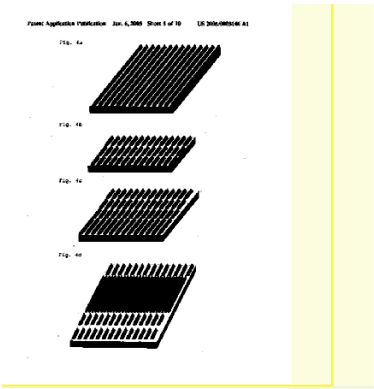

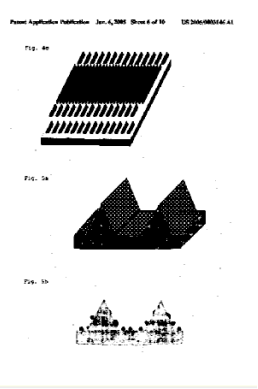

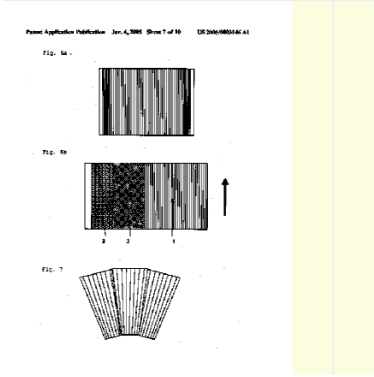

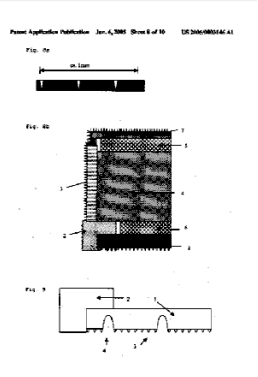

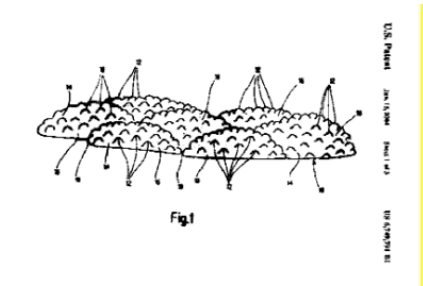
Fig.1

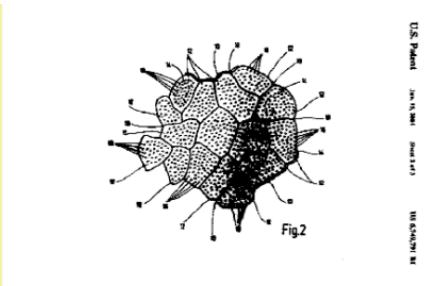
Fig.2

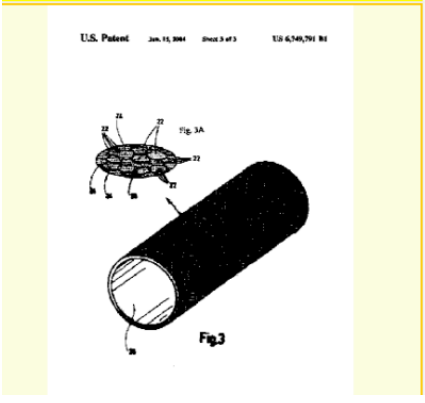
U.S. Patent
Fig. 3A
Fig.3

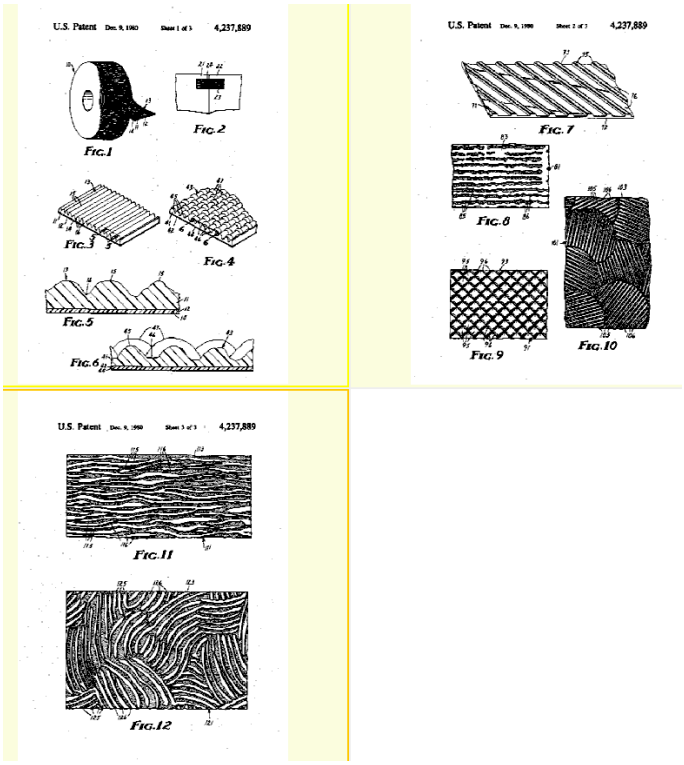

References

Limiting references

This place does not cover:

Apparatus or processes specially adapted for the manufacture of record carriers, preparing and using a stamper, e.g. pressing or injection moulding substrates	G11B 7/263

Informative references

Attention is drawn to the following places, which may be of interest for search:

Apparatus or processes for manufacturing absorbent pads, mechanical treatment of webs, e.g. for giving them a fibre like appearance, e.g. by embossing	A61F 13/15731
Methods preventing deposition of fouling or of dust, by giving articles subject to fouling a special shape or arrangement (e.g. lotus effect)	B08B 17/06
Producing optical elements, e.g. lenses, prisms; optical laminates	B29D 11/0073
Producing carriers of records containing fine grooves or impressions, producing optically read record carriers, e.g. optical discs	B29D 17/007
Curable composition for imprints	C08F 2/48
Holographic processes or apparatus	G03H 1/00

B29C 59/025

{Fibrous surfaces with piles or similar fibres substantially perpendicular to the surface}

Definition statement

This place covers:

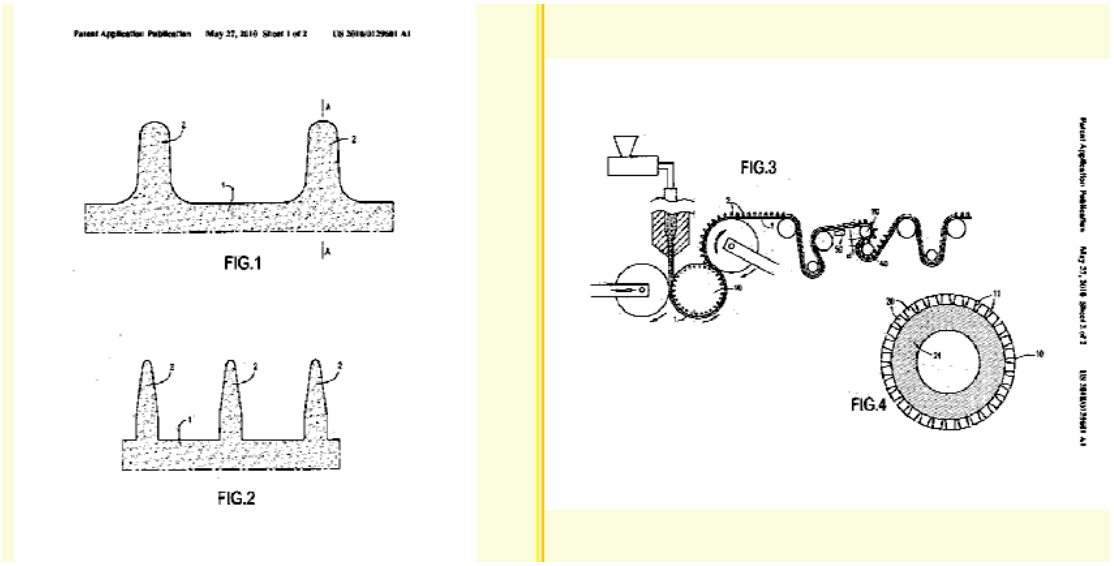

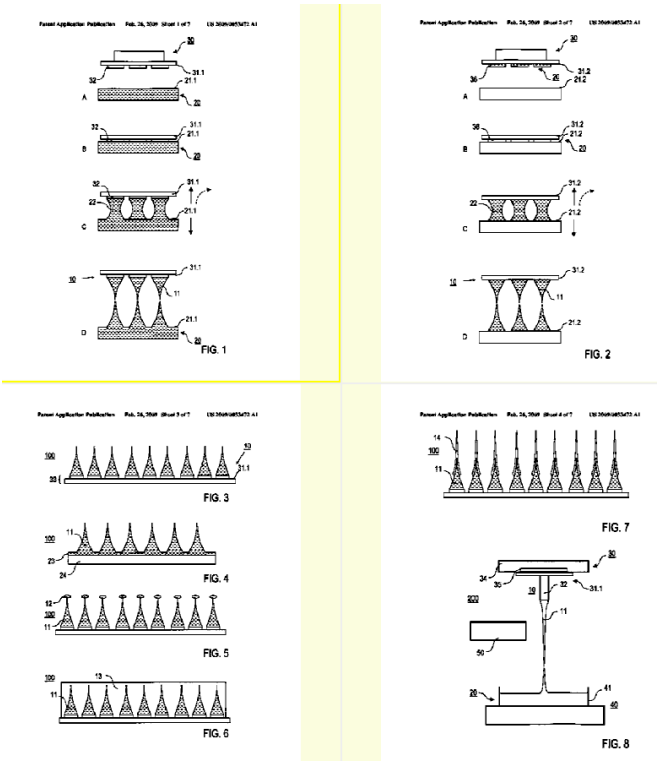

Patent Application Publication Feb. 24, 2005 US 2005/0039313 A1

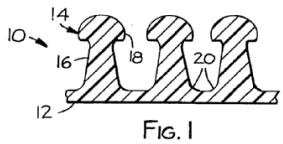

FIG. 1

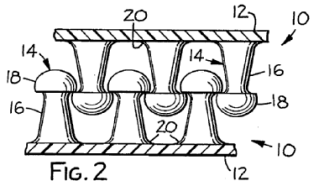

FIG. 2

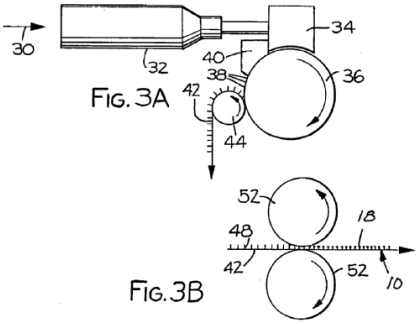

FIG. 3A

FIG. 3B

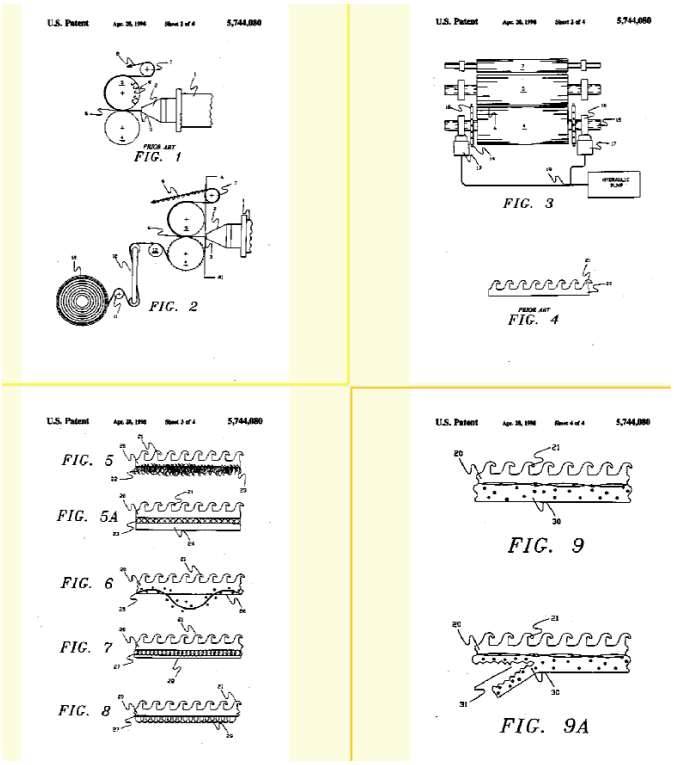

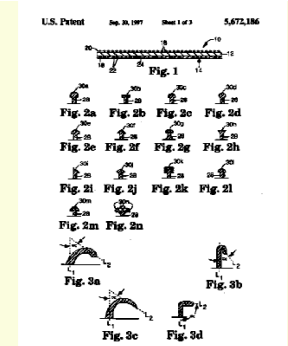
U.S. Patent
5,672,186
Fig. 1
Fig. 2a
Fig. 2b
Fig. 2c
Fig. 2d
Fig. 2e
Fig. 2f
Fig. 2g
Fig. 2h
Fig. 2i
Fig. 2j
Fig. 2k
Fig. 2l
Fig. 2m
Fig. 2n
Fig. 3a
Fig. 3b
Fig. 3c
Fig. 3d

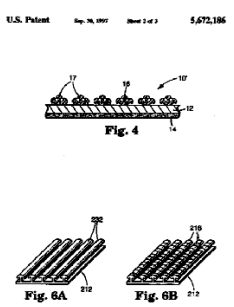
U.S. Patent
5,672,186
Fig. 4
Fig. 6A
Fig. 6B

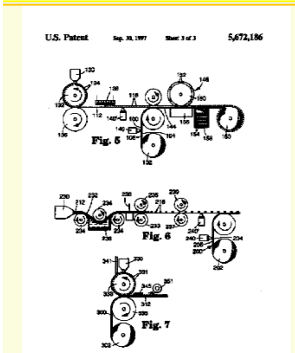
U.S. Patent
5,672,186
Fig. 5
Fig. 6
Fig. 7

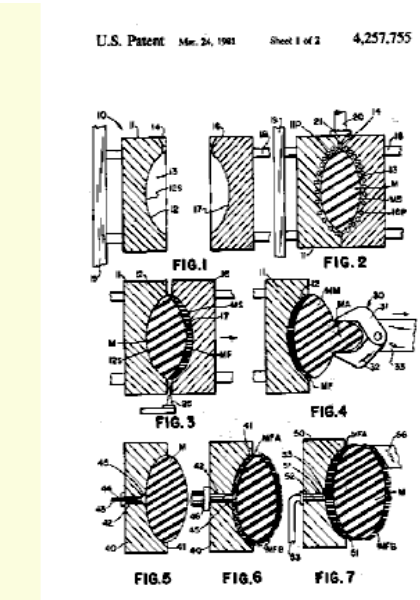
U.S. Patent
Mar. 24, 1981
Sheet 1 of 2
4,257,755
FIG. 1
FIG. 2
FIG. 3
FIG. 4
FIG. 5
FIG. 6
FIG. 7

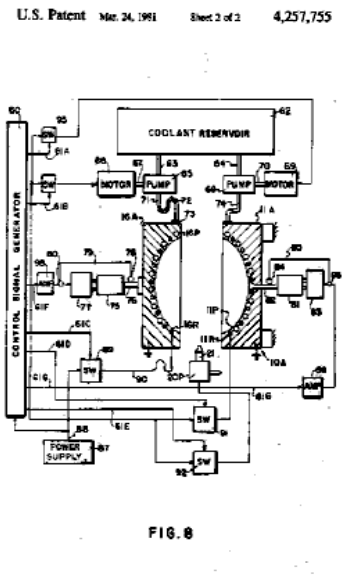
U.S. Patent
Mar. 24, 1981
Sheet 2 of 2
4,257,755
COOLANT RESERVOIR
MOTOR
PUMP
CONTROL SIGNAL GENERATOR
POWER SUPPLY
FIG. 8

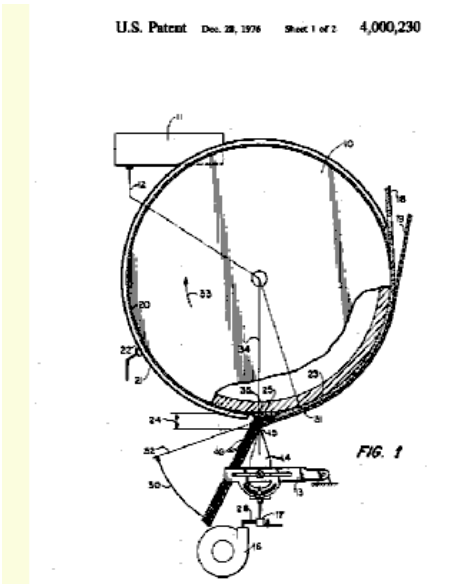

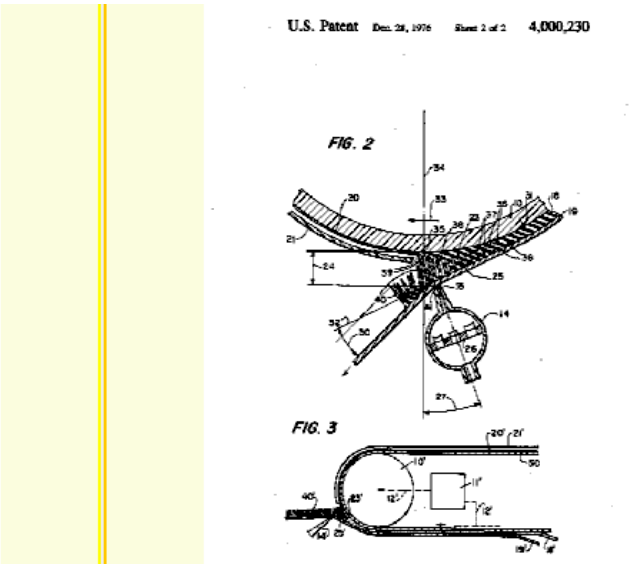

References

Informative references

Attention is drawn to the following places, which may be of interest for search:

Compression moulding of articles of indefinite length, characterised by the shape of the surface	B29C 43/222
Fasteners of the touch-and-close type; making such fasteners made integrally of plastics, obtained by moulding processes	A44B 18/0049
Absorbent pads, topsheet characterised by its apertures, e.g. perforations	A61F 13/512

B29C 59/026

{of layered or coated substantially flat surfaces}

Definition statement

This place covers:

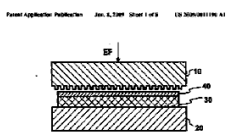

Fig 1a (Prior Art)

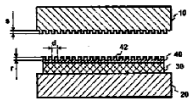

Fig 1b (Prior Art)

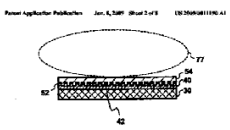

Fig 2 (Prior Art)

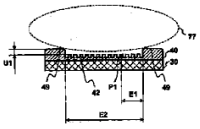

Fig 3

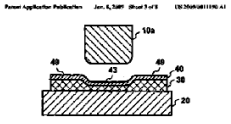

Fig 4

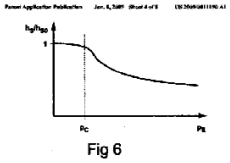

Fig 6

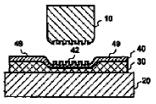

Fig 5

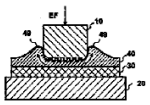

Fig 7

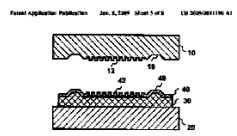

Fig 8

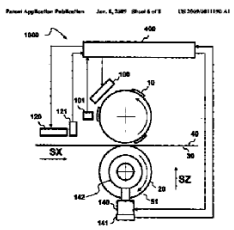

Fig 10

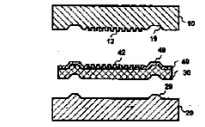

Fig 9

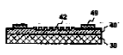

Fig 11

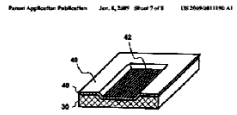

Fig 12

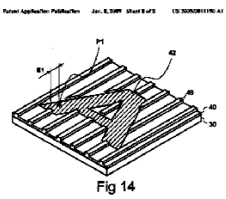

Fig 14

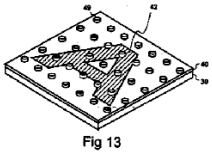

Fig 13

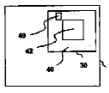

Fig 15

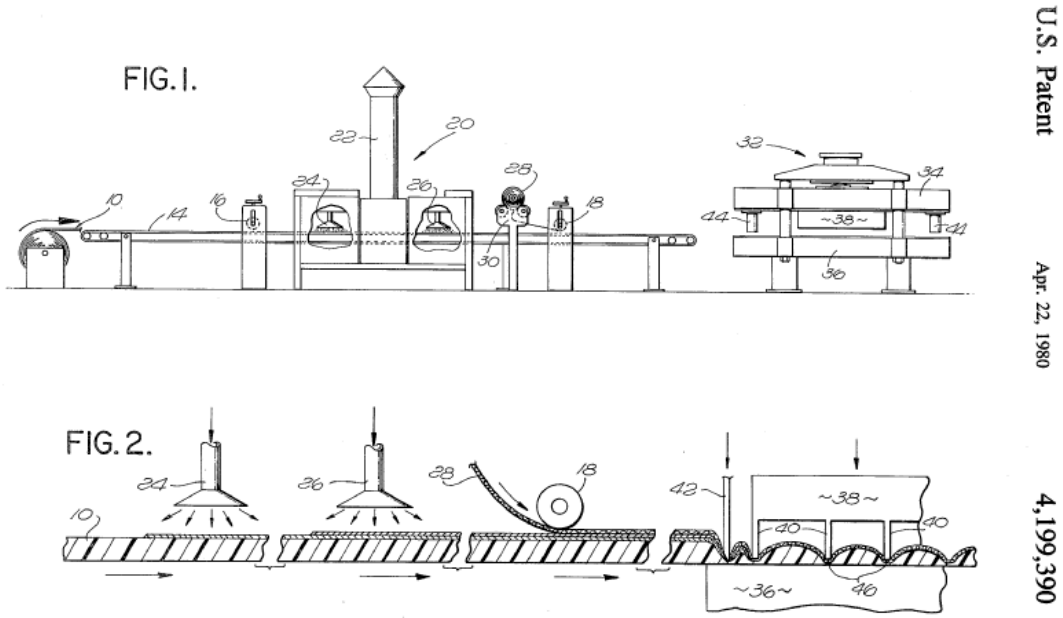

References

Informative references

Attention is drawn to the following places, which may be of interest for search:

Floor covering on textile basis, e.g. PVC coatings on fibrous felt, characterised by their relief structure obtained by mechanical embossing	D06N 7/001

B29C 59/04

using rollers or endless belts

Definition statement

This place covers:

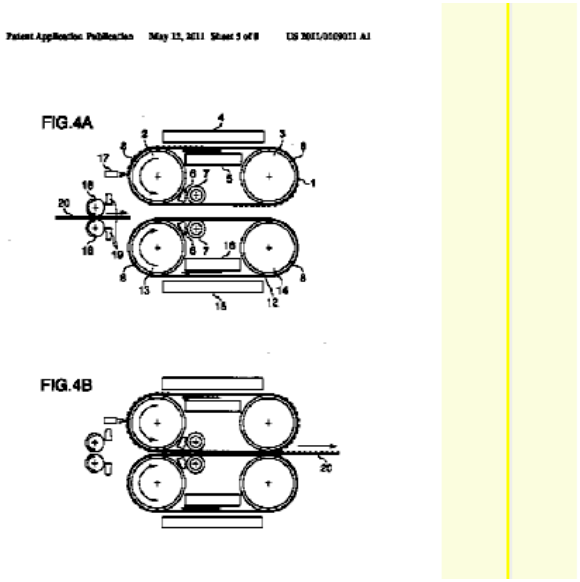

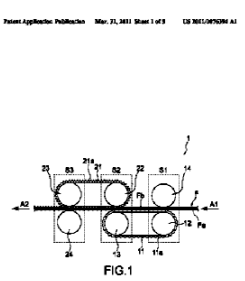

FIG.1

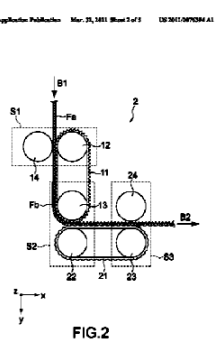

FIG.2

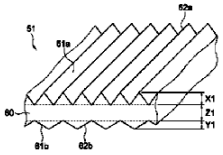

FIG.3

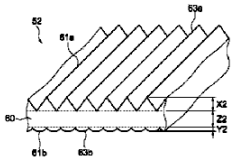

FIG.4

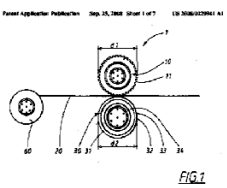

FIG.1

FIG.2

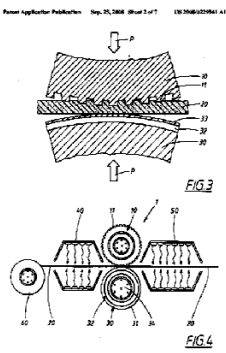

FIG.3

FIG.4

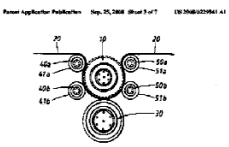

FIG.5

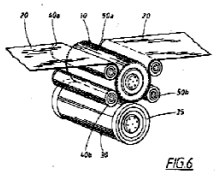

FIG.6

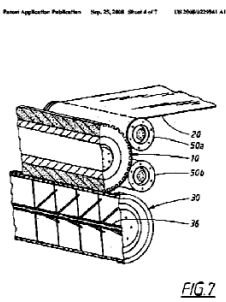

FIG.7

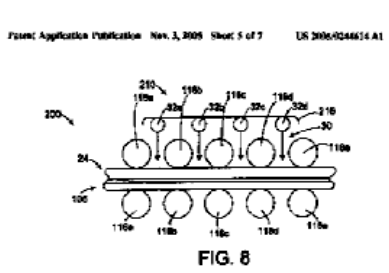

FIG. 8

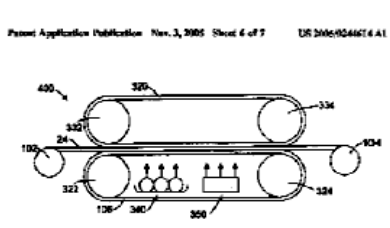

FIG. 10

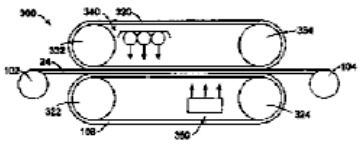

FIG. 9

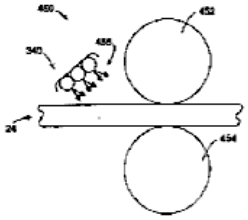

FIG. 10A

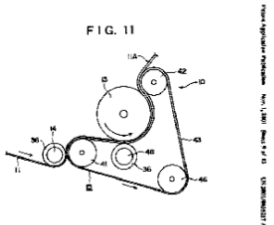

FIG. 11

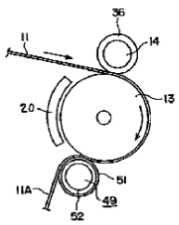

FIG. 12

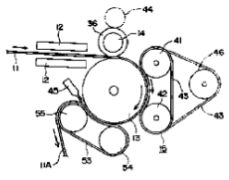

FIG. 13

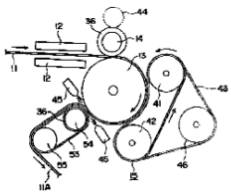

FIG. 14

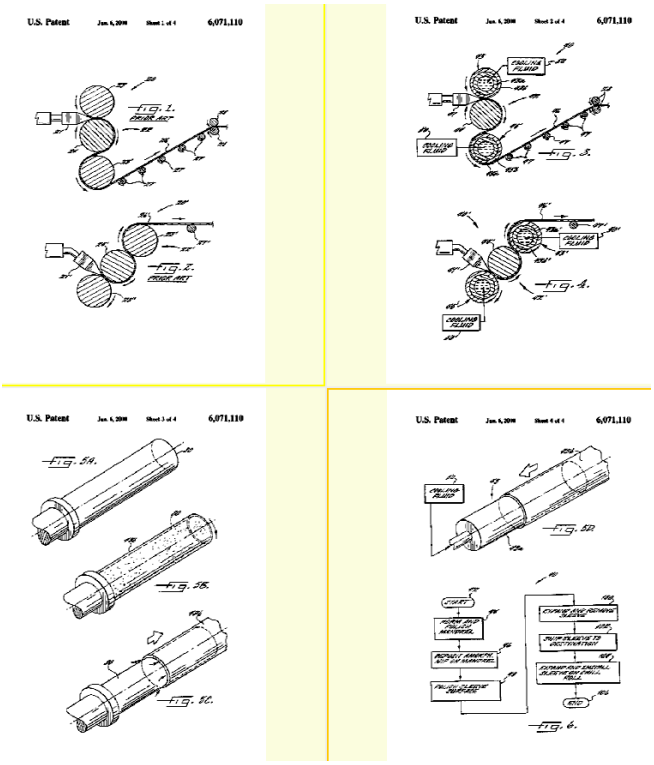

References

Informative references

Attention is drawn to the following places, which may be of interest for search:

Compression moulding of articles of indefinite length, characterised by the shape of the surface	B29C 43/222
Fasteners of the touch-and-close type; making such fasteners made integrally of plastics, obtained by moulding processes	A44B 18/0049
Absorbent pads, topsheet characterised by its apertures, e.g. perforations	A61F 13/512

B29C 59/043

{for profiled articles}

Definition statement

This place covers:

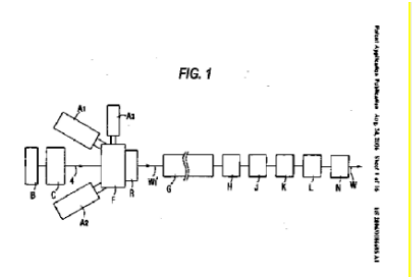

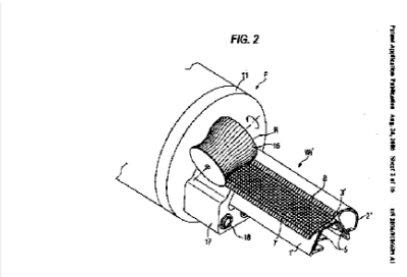

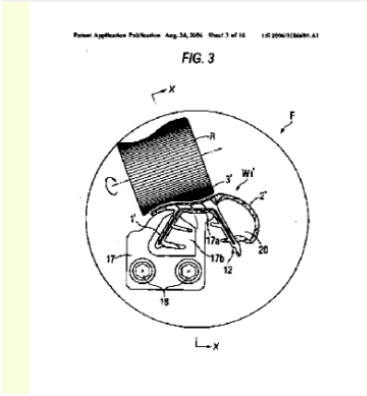

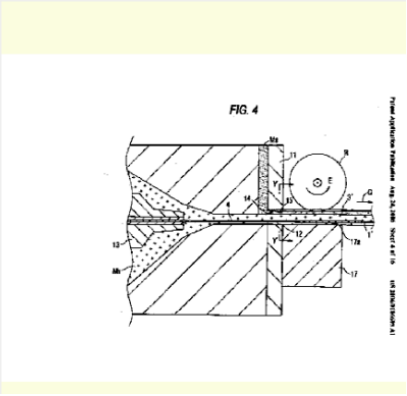

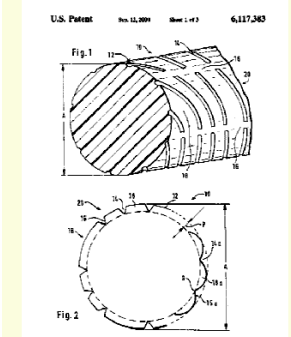

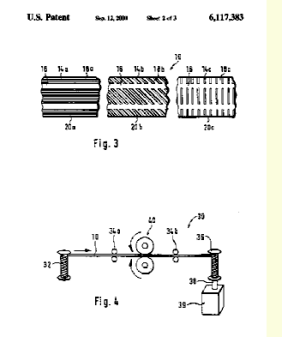

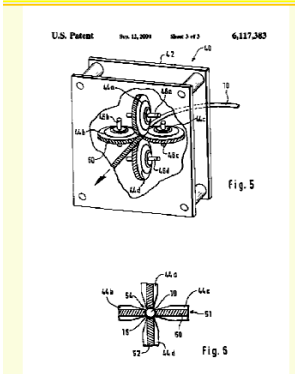

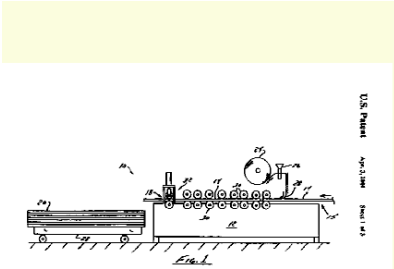

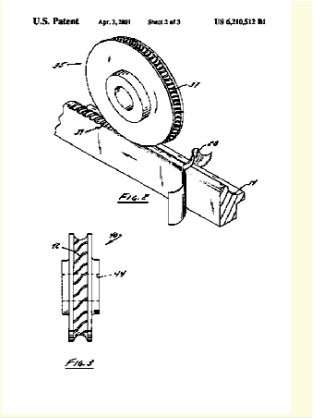

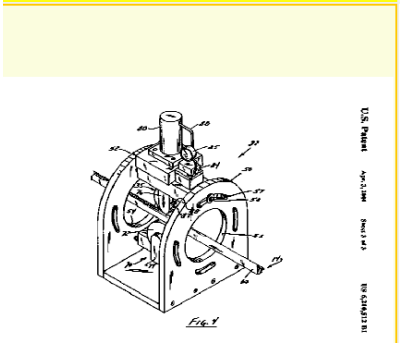

B29C 59/046

{for layered or coated substantially flat surfaces}

Definition statement

This place covers:

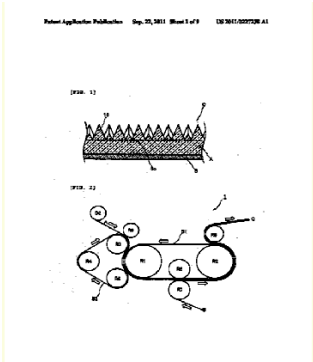

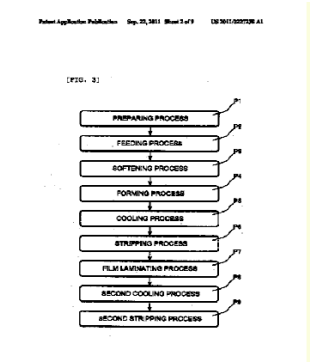

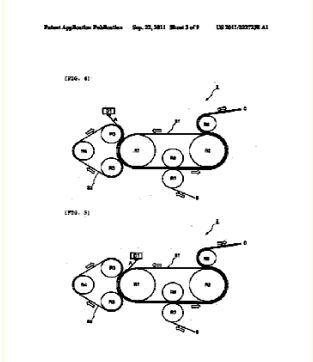

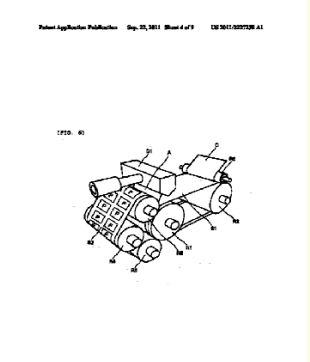

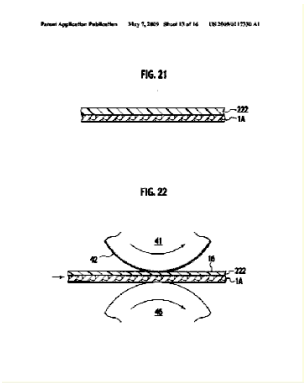
FIG. 21
FIG. 22

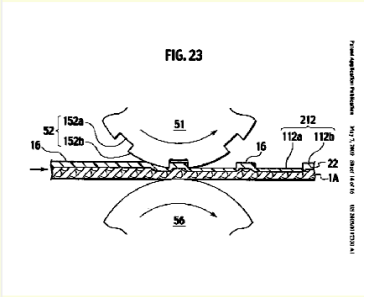
FIG. 23

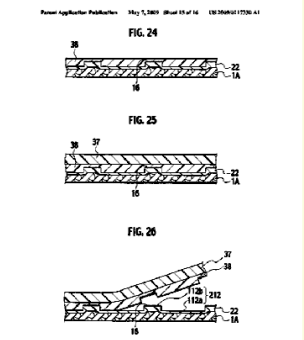
FIG. 24
FIG. 25
FIG. 26

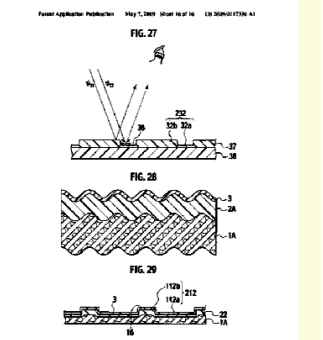
FIG. 27
FIG. 28
FIG. 29

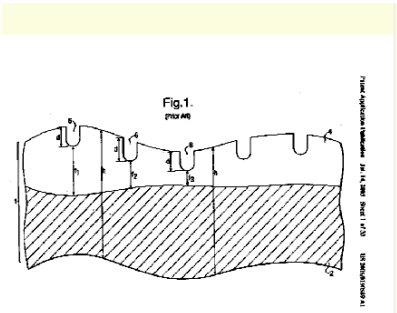
Fig.1.

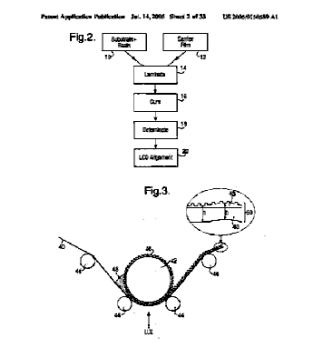
Fig.2.
Fig.3.

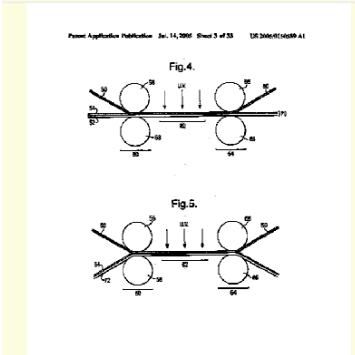
Fig.4.
Fig.5.

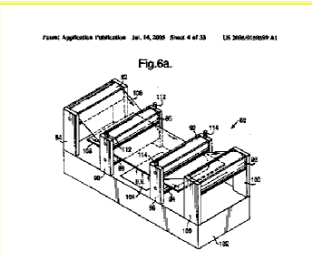
Fig.6a.

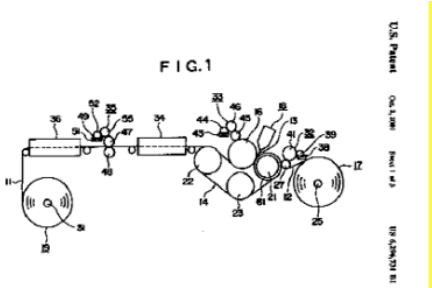

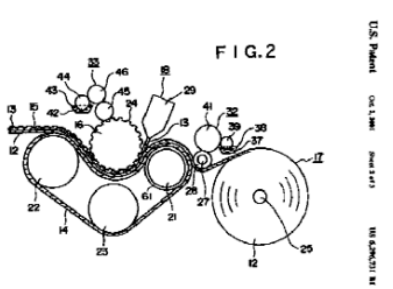

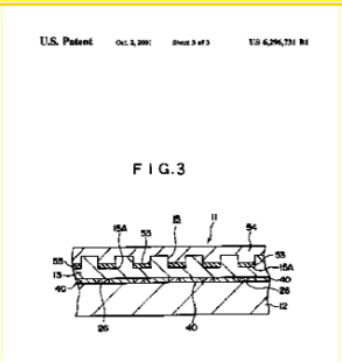

References

Informative references

Attention is drawn to the following places, which may be of interest for search:

Producing optical elements, e.g. lenses, prisms; optical laminates	B29D 11/0073
Ancillary operations in connection with laminating processes, embossing	B32B 38/06

B29C 59/06

using vacuum drums {(for thermoforming B29C 51/225)}

Definition statement

This place covers:

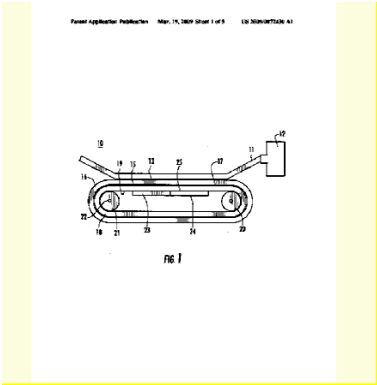

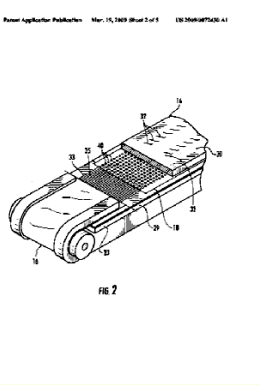

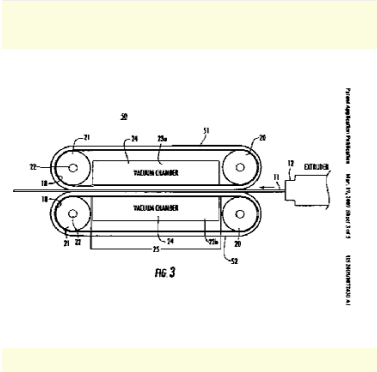

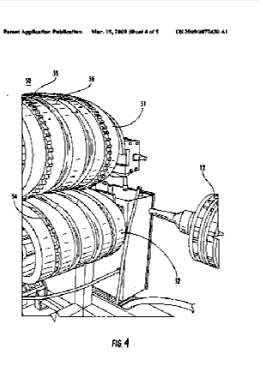

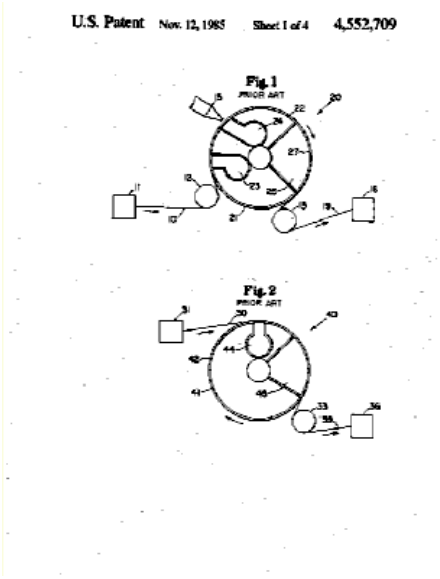

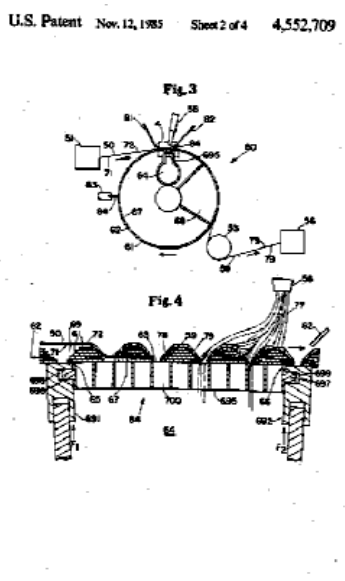

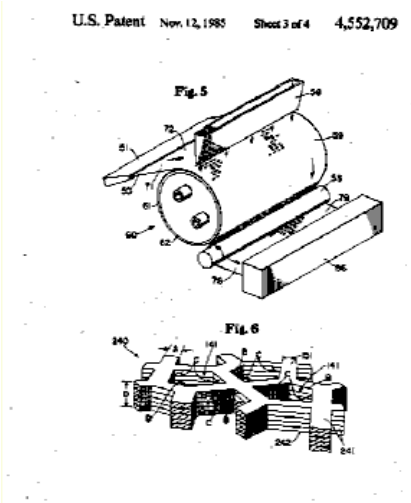

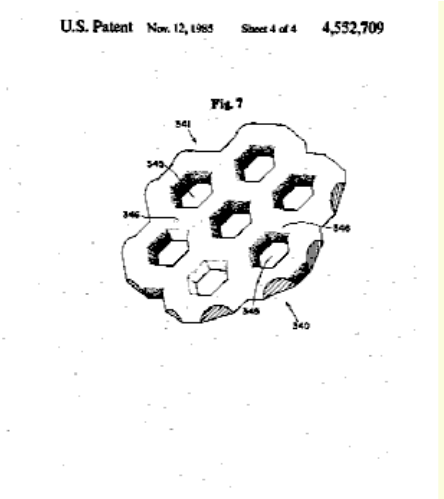

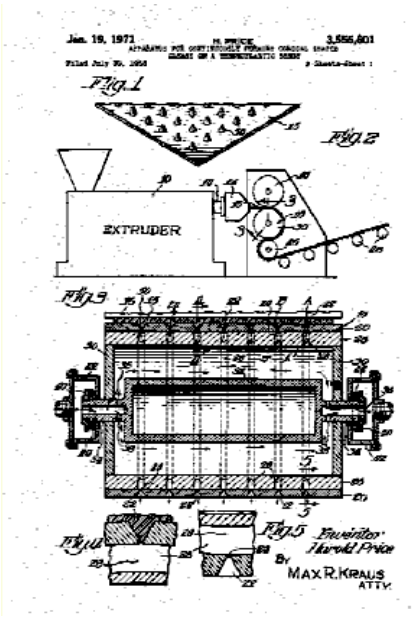

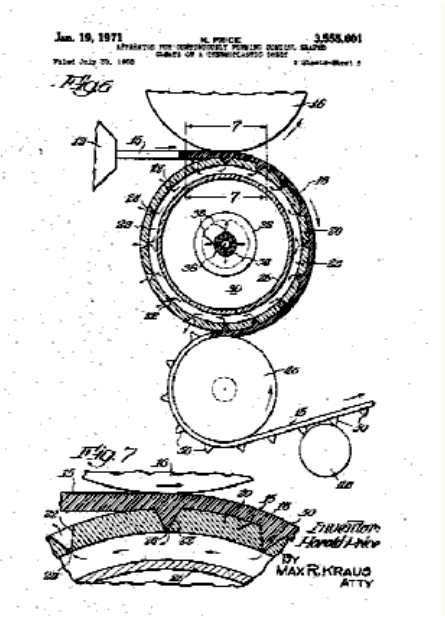

References

Informative references

Attention is drawn to the following places, which may be of interest for search:

Apparatus or processes for manufacturing absorbent pads, mechanical treatment of webs, e.g. for giving them a fibre like appearance, e.g. by embossing	A61F 13/15731
Perforating by non-mechanical means, e.g. by fluid jet	B26F 1/26

B29C 59/08

by flame treatment {; using hot gases}

Definition statement

This place covers:

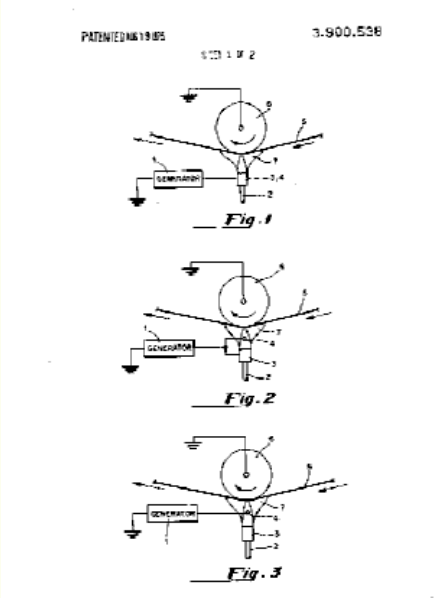

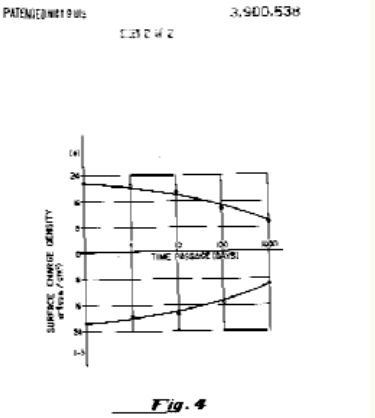

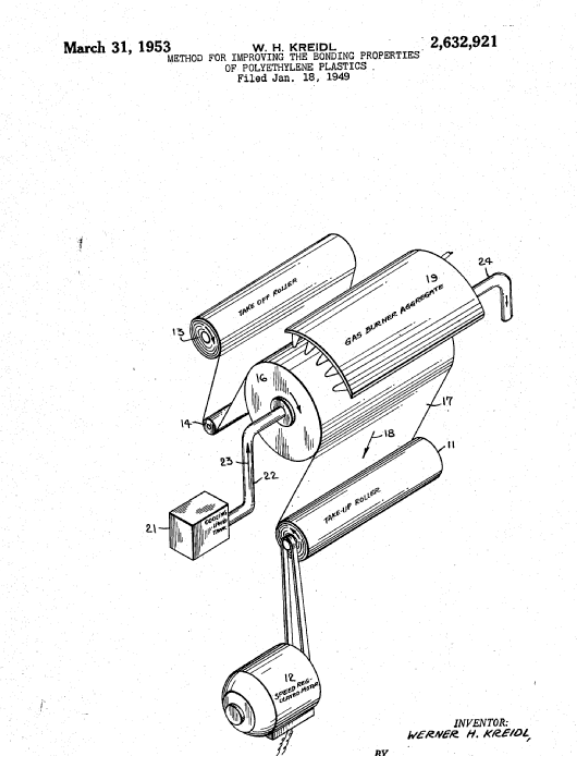

References

Limiting references

This place does not cover:

Pretreatment of surfaces to which liquids or fluent materials are to be applied; by flame	B05D 3/08

Informative references

Attention is drawn to the following places, which may be of interest for search:

Inking and printing with a printer's forme; printing on plastics, using mechanical, physical or chemical means, e.g. corona discharge, etching or organic solvents, to improve ink retention	B41M 1/305

B29C 59/085

{of profiled articles, e.g. hollow or tubular articles}

Definition statement

This place covers:

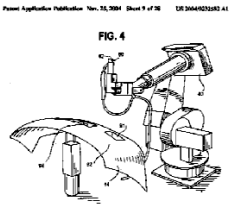

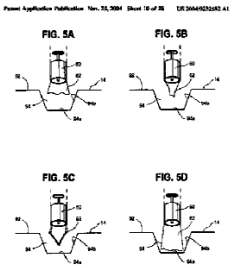

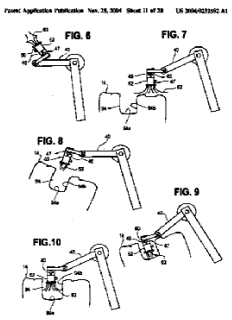

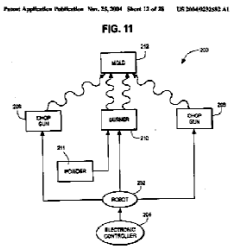

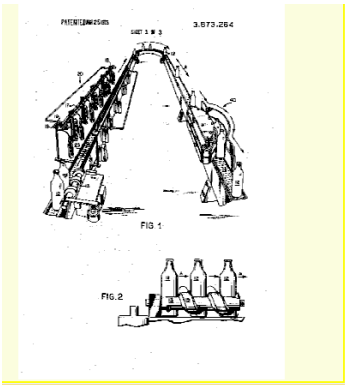
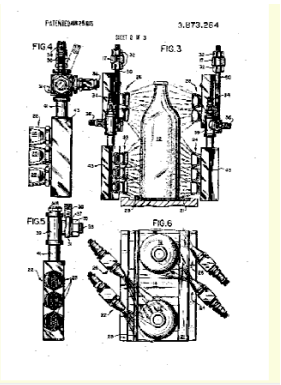
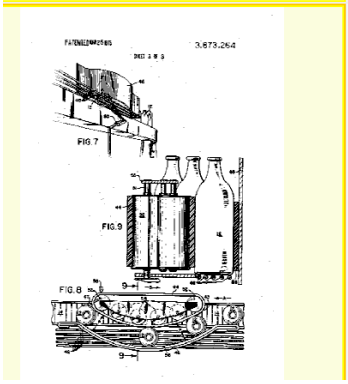

B29C 59/10

by electric discharge treatment

Definition statement

This place covers:

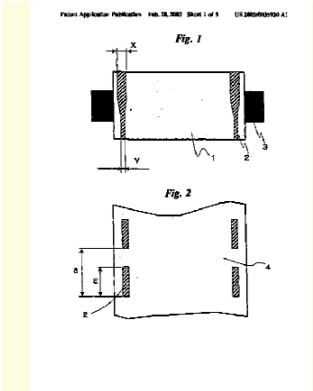
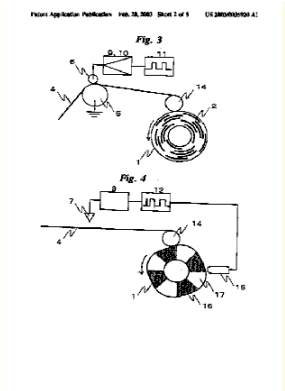
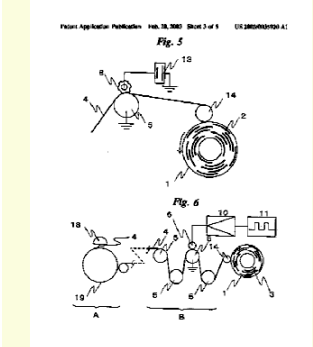
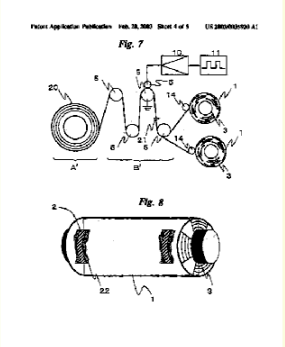

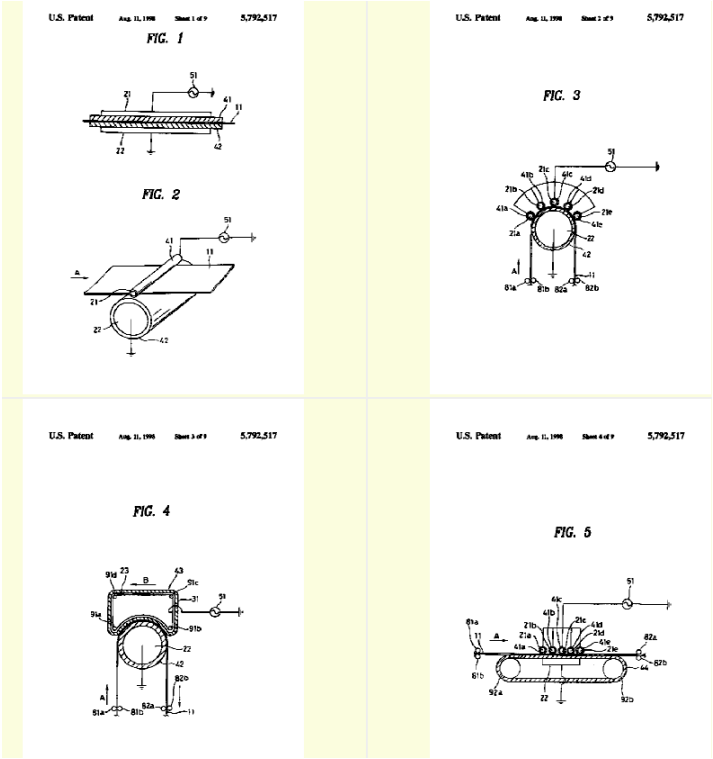
U.S. Patent
5,792,517
FIG. 1
FIG. 2
FIG. 3
FIG. 4
FIG. 5

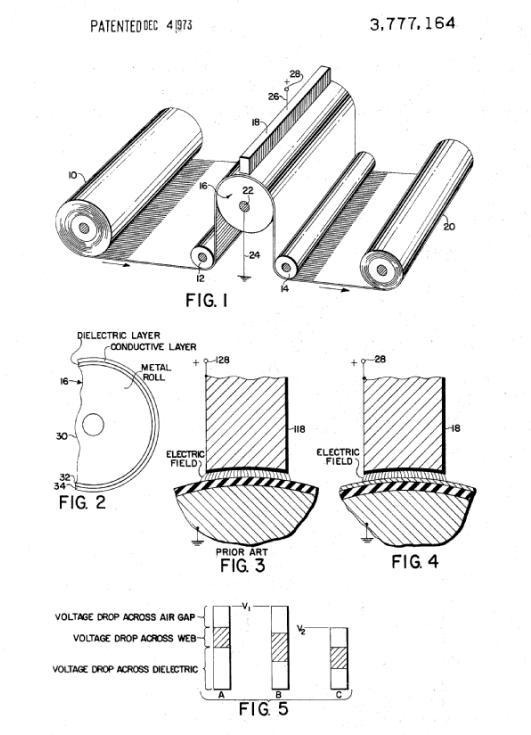
PATENTED DEC 4 1973
3,777,164
FIG. 1
DIELECTRIC LAYER
CONDUCTIVE LAYER
METAL ROLL
FIG. 2
ELECTRIC FIELD
PRIOR ART
FIG. 3
FIG. 4
VOLTAGE DROP ACROSS AIR GAP
VOLTAGE DROP ACROSS WEB
VOLTAGE DROP ACROSS DIELECTRIC
FIG. 5

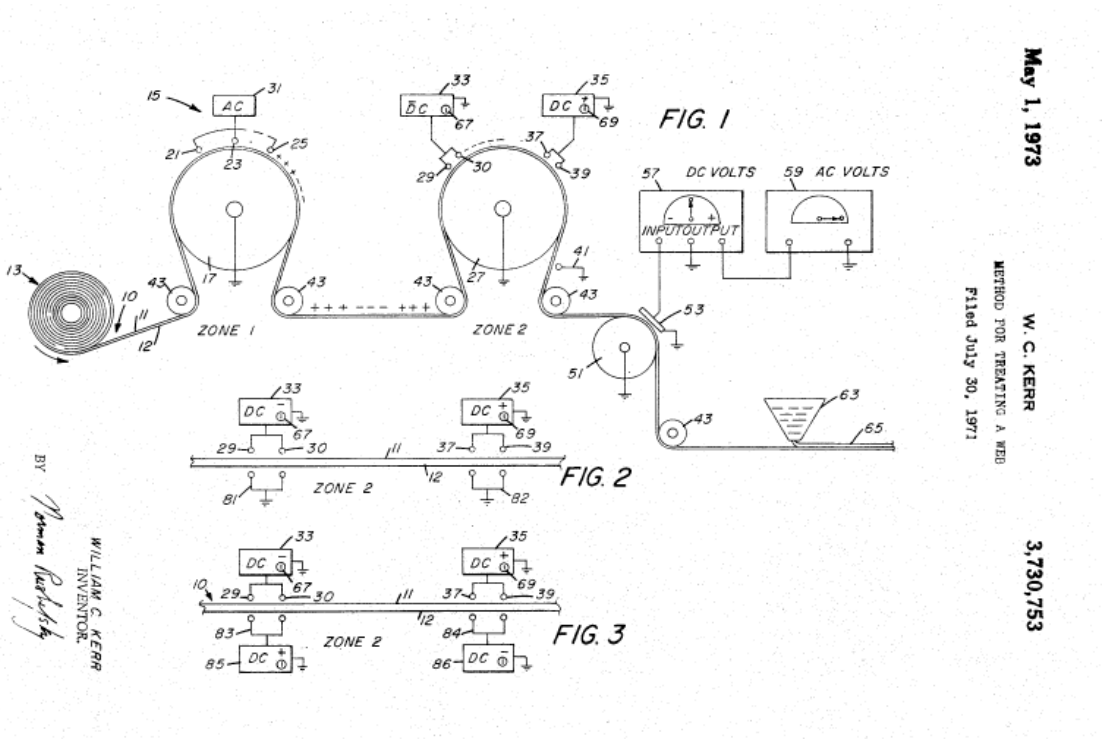

References

Limiting references

This place does not cover:

Pretreatment of surfaces to which liquids or fluent materials are to be applied; by electrical means	B05D 3/14
Inking and printing with a printer's forme; printing on plastics, using mechanical, physical or chemical means, e.g. corona discharge, etching or organic solvents, to improve ink retention	B41M 1/305

Informative references

Attention is drawn to the following places, which may be of interest for search:

Physical treatment of fibres, threads, yarns, fabrics, of fibrous goods; corona discharge, low temperature plasma	D06M 10/025
Devices providing for corona discharge	H01T 19/00
Devices providing for corona discharge, corona rings	H01T 19/02
Devices providing for corona discharge, having pointed electrodes	H01T 19/04

B29C 59/103

{of profiled articles, e.g. hollow or tubular articles}

Definition statement

This place covers:

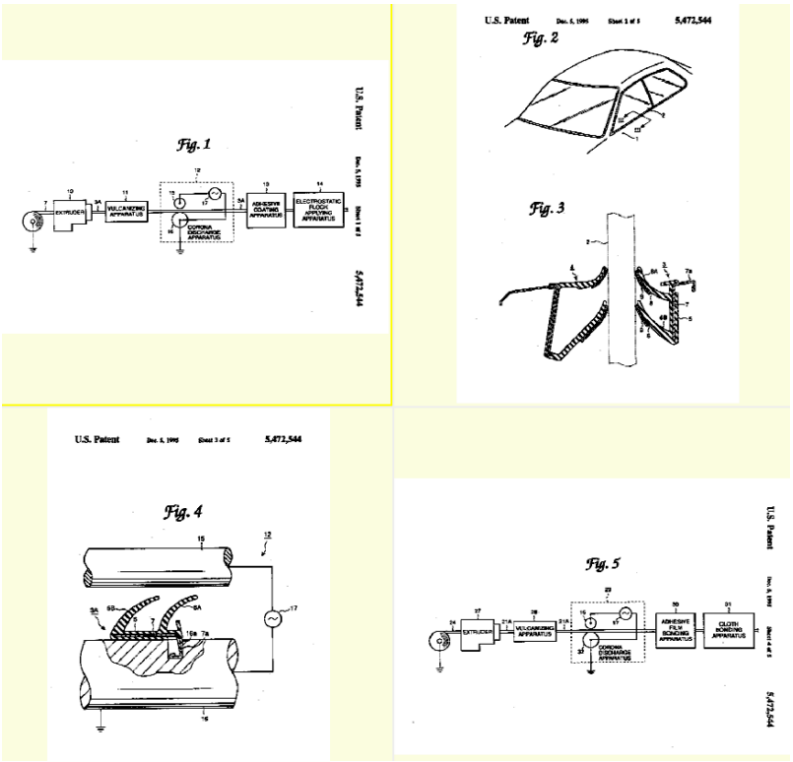

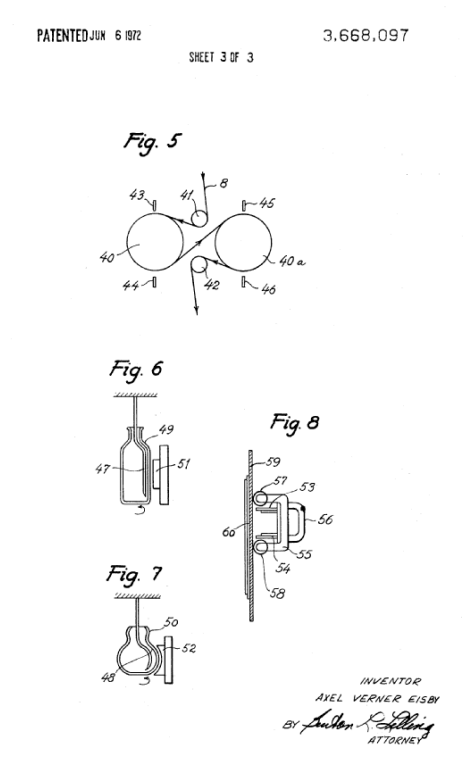

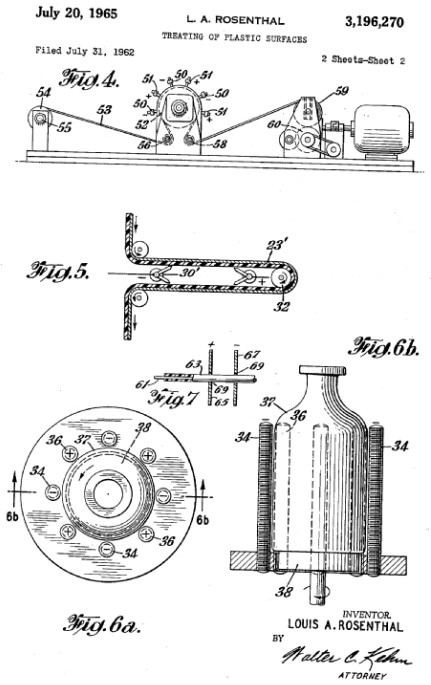
July 20, 1965 L. A. ROSENTHAL 3,196,270
TREATING OF PLASTIC SURFACES
Filed July 31, 1962 2 Sheets-Sheet 2
Fig. 4.
Fig. 5.
Fig. 6b.
Fig. 7
Fig. 6a.
INVENTOR. LOUIS A. ROSENTHAL
BY Walter C. Kehm
ATTORNEY

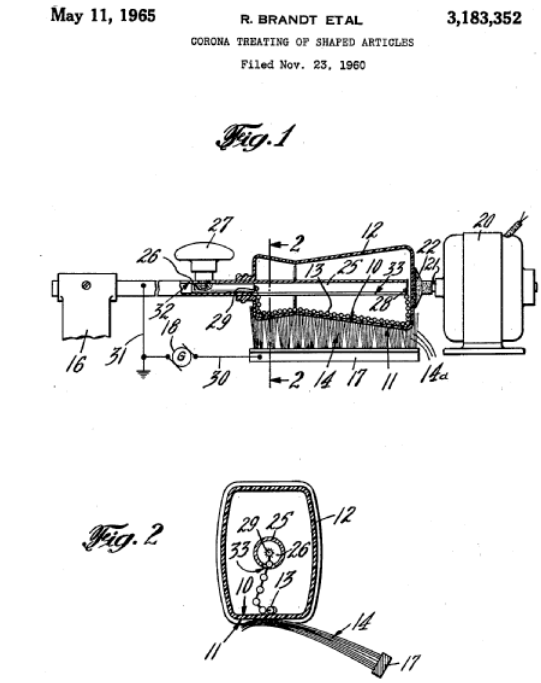
May 11, 1965 R. BRANDT ETAL 3,183,352
CORONA TREATING OF SHAPED ARTICLES
Filed Nov. 23, 1960
Fig. 1
Fig. 2

B29C 59/106

{the electrodes being placed on the same side of the material to be treated}

Definition statement

This place covers:

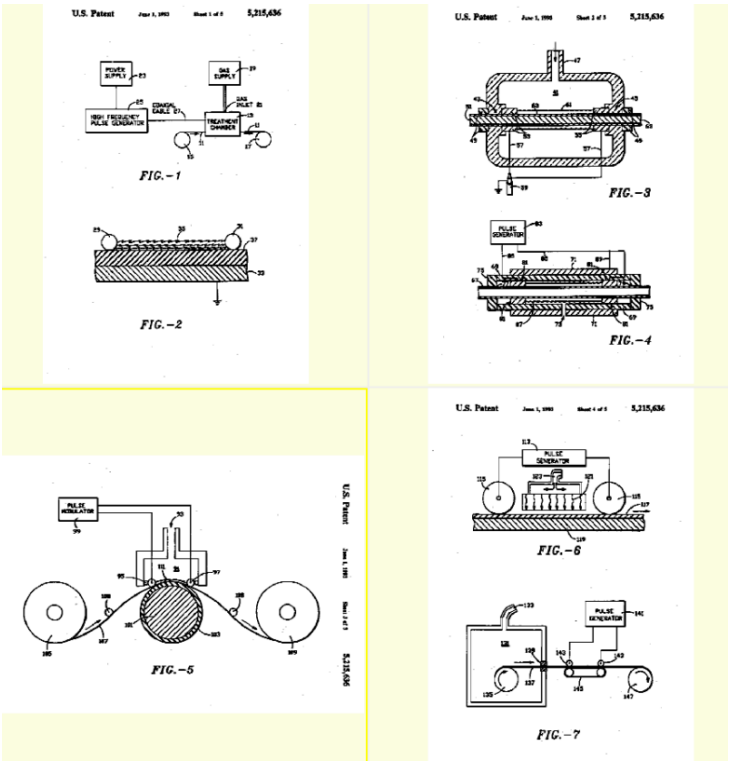

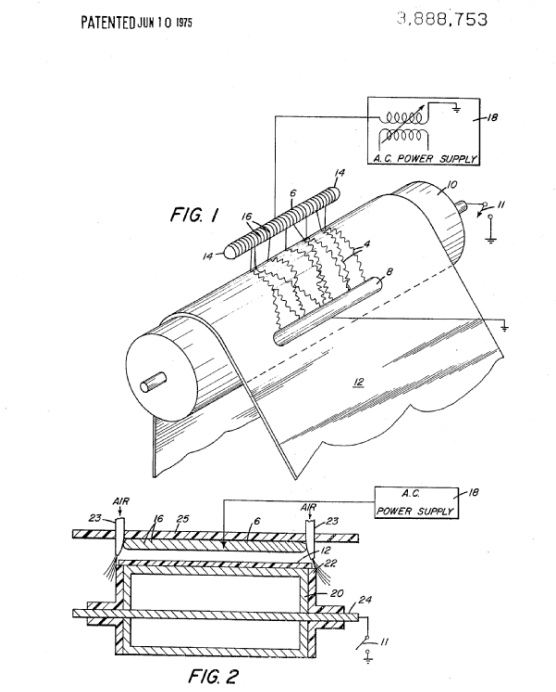

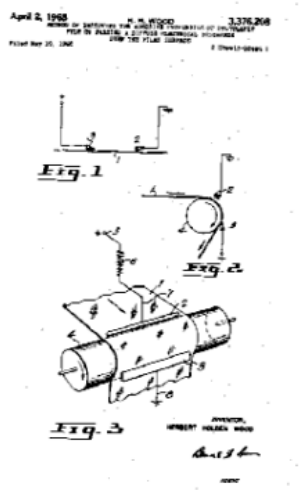

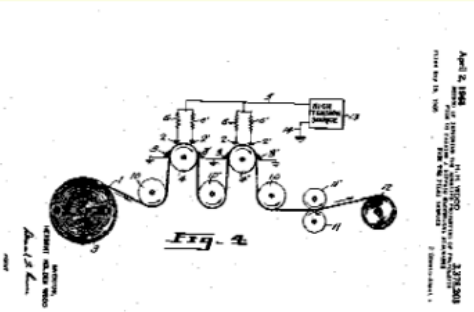

June 2, 1964 F. N. ROTHACKER 3,135,676

MATERIAL TREATMENT METHOD AND APPARATUS

Filed Nov. 8, 1960

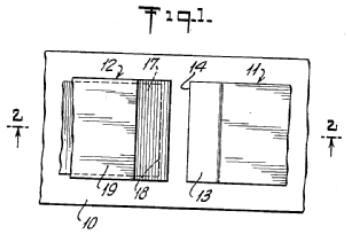

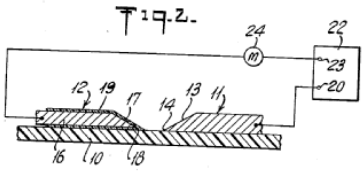

B29C 59/12

in an environment other than air

Definition statement

This place covers:

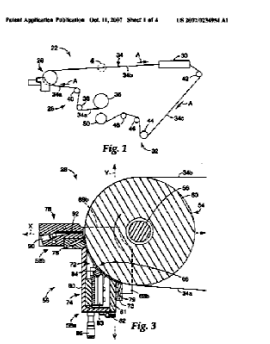

Fig. 1

Fig. 3

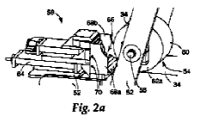

Fig. 2a

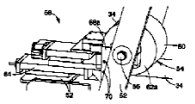

Fig. 2b

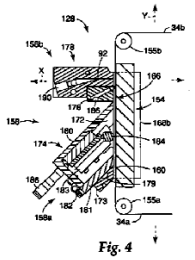

Fig. 4

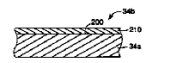

Fig. 5

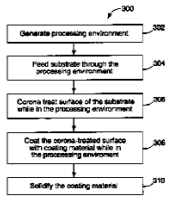

Fig. 6

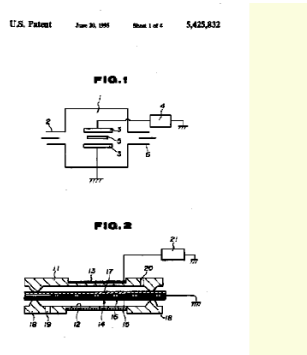

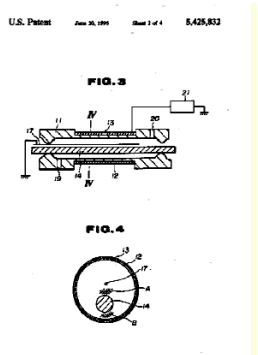

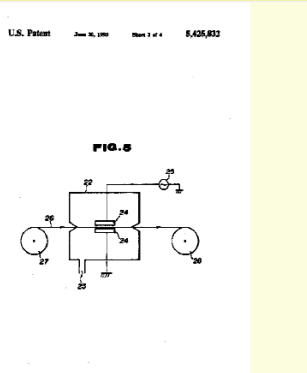

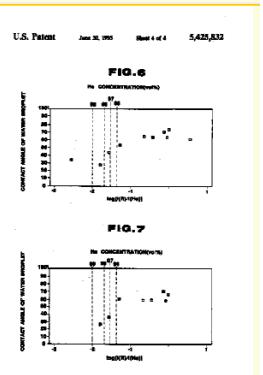

B29C 59/14

by plasma treatment {(plasma tubes per se H01J)}

Definition statement

This place covers:

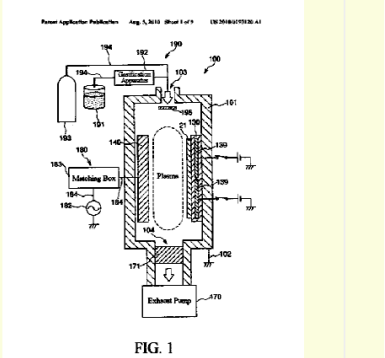

FIG. 1

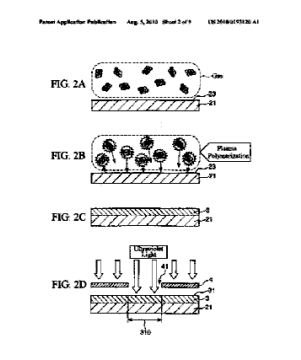

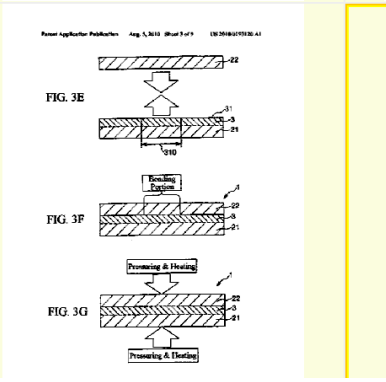

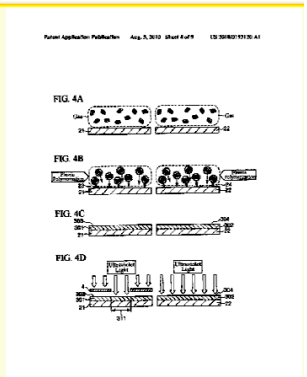

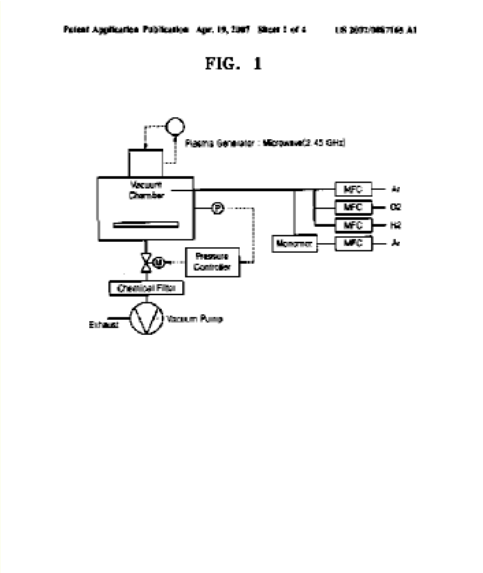

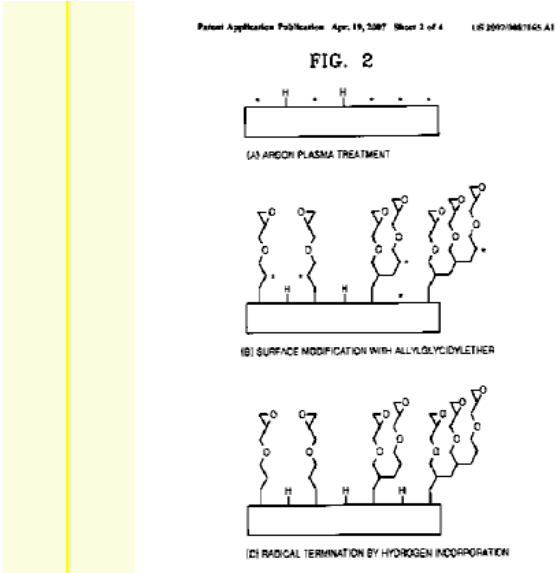

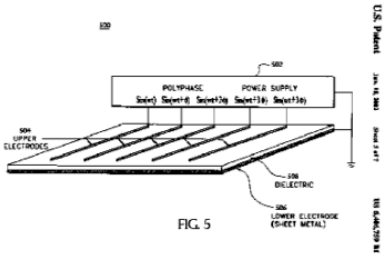

FIG. 5

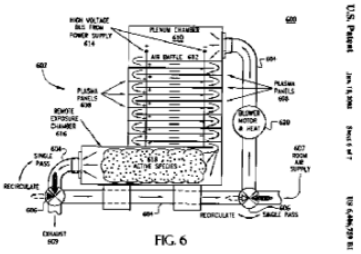
FIG. 6

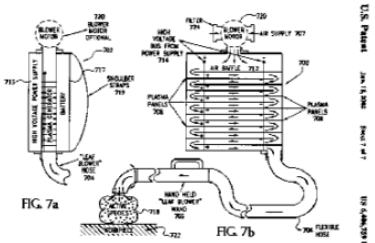
FIG. 7a FIG. 7b

Sept. 25, 1973 D. D. LIDEL 3,761,299
TREATING POLYMERIC SURFACES
Filed Oct. 13, 1970

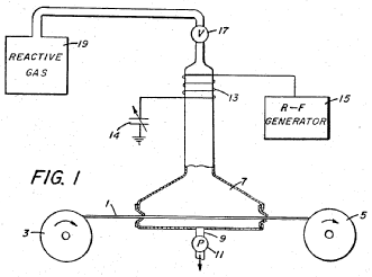

FIG. 1

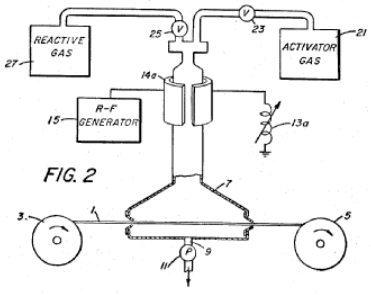

FIG. 2

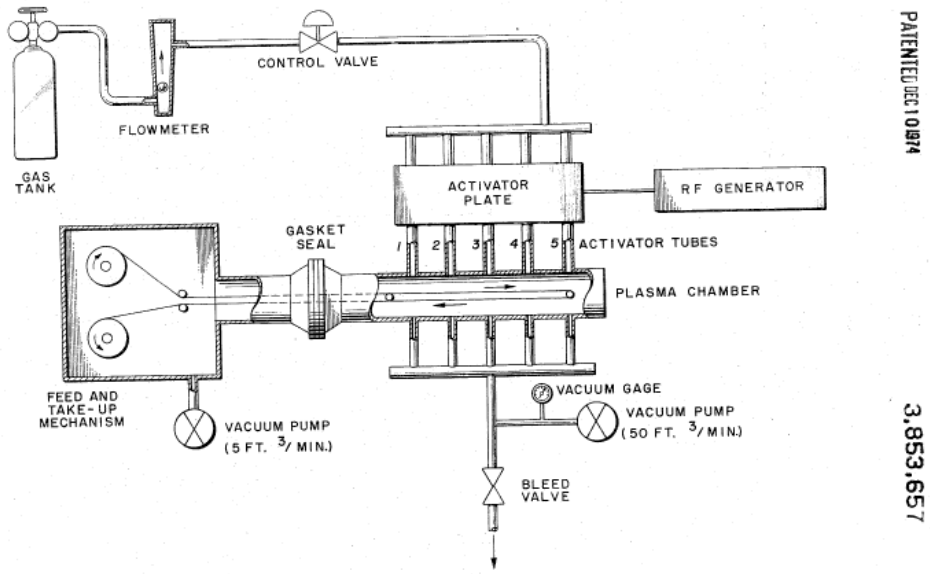

References

Limiting references

This place does not cover:

Processes, other than flocking for applying particular liquids or other fluent materials; plasma deposition of organic layers	B05D 1/62
Pretreatment of surfaces to which liquids or fluent materials are to be applied; plasma treatment, pretreatment of polymeric substrates	B05D 3/144
Apparatus or processes for manufacturing printed circuits; etching the insulating substrate by plasma etching	H05K 3/0041

Informative references

Attention is drawn to the following places, which may be of interest for search:

Processes for manufacturing semi-permeable membranes; after-treatment of organic or inorganic membranes; with wave-energy, particle radiation or plasma	B01D 67/009
Physical treatment of fibres, threads, yarns, fabrics, of fibrous goods; corona discharge, low temperature plasma	D06M 10/025

B29C 59/142

{of profiled articles, e.g. hollow or tubular articles}

Definition statement

This place covers:

Fig. 3

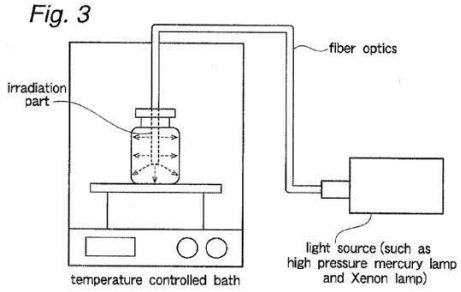

Fig. 4

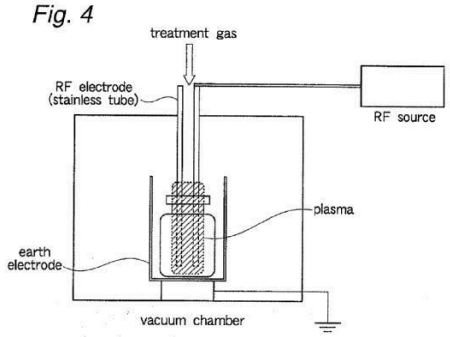

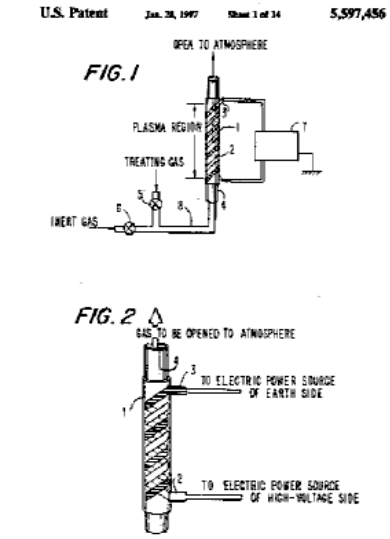

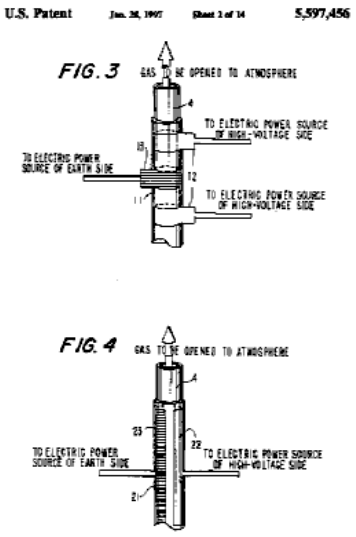

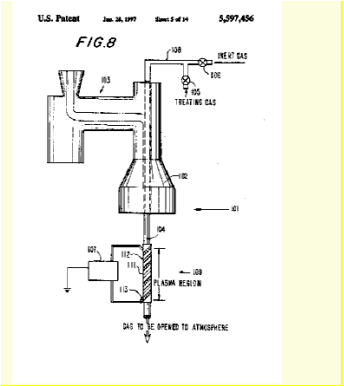
U.S. Patent
5,597,456
FIG.8
INERT GAS
TREATING GAS
PLASMA REGION
GAS TO BE OPENED TO ATMOSPHERE

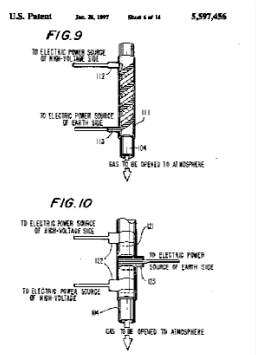
U.S. Patent
5,597,456
FIG.9
TO ELECTRIC POWER SOURCE OF HIGH-VOLTAGE SIDE
TO ELECTRIC POWER SOURCE OF EARTH SIDE
GAS TO BE OPENED TO ATMOSPHERE
FIG.10
TO ELECTRIC POWER SOURCE OF HIGH-VOLTAGE SIDE
TO ELECTRIC POWER SOURCE OF EARTH SIDE
GAS TO BE OPENED TO ATMOSPHERE

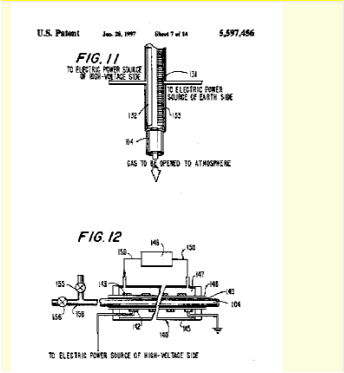
U.S. Patent
5,597,456
FIG. 11
TO ELECTRIC POWER SOURCE OF HIGH-VOLTAGE SIDE
TO ELECTRIC POWER SOURCE OF EARTH SIDE
GAS TO BE OPENED TO ATMOSPHERE
FIG. 12
TO ELECTRIC POWER SOURCE OF HIGH-VOLTAGE SIDE

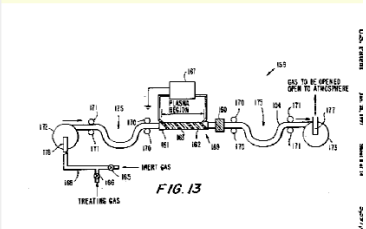
PLASMA REGION
GAS TO BE OPENED TO ATMOSPHERE
INERT GAS
TREATING GAS
FIG. 13

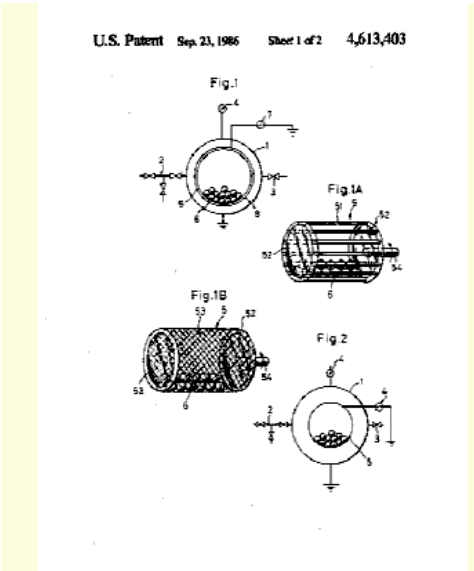
U.S. Patent Sep. 23, 1986 Sheet 1 of 2 4,613,403
Fig.1
Fig.1A
Fig.1B
Fig.2

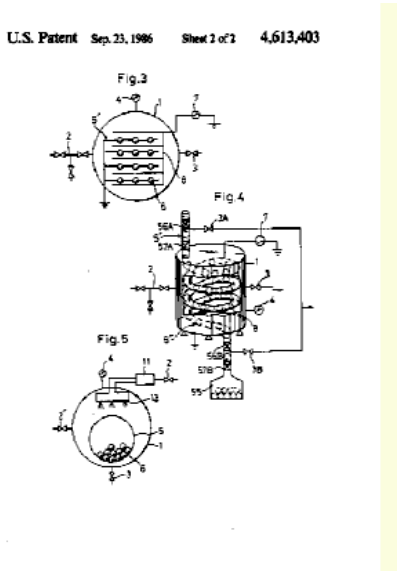
U.S. Patent Sep. 23, 1986 Sheet 2 of 2 4,613,403
Fig.3
Fig.4
Fig.5

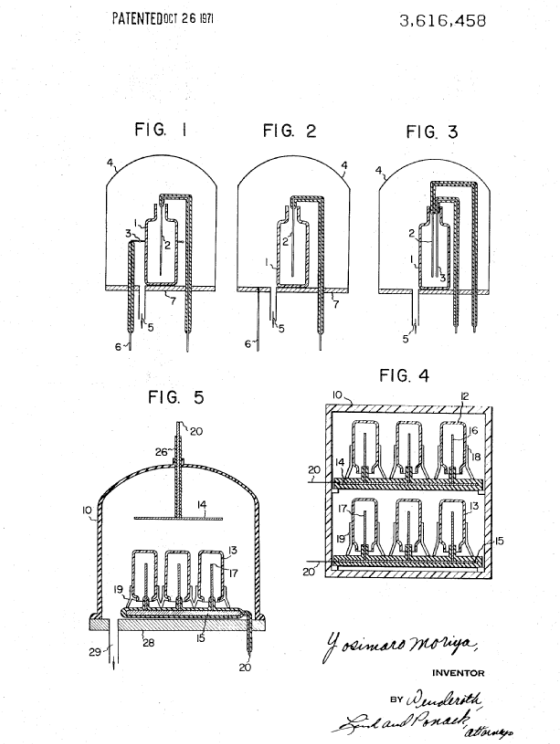

B29C 59/16

by wave energy or particle radiation {, e.g. infrared heating (B29C 59/007 takes precedence)}

Definition statement

This place covers:

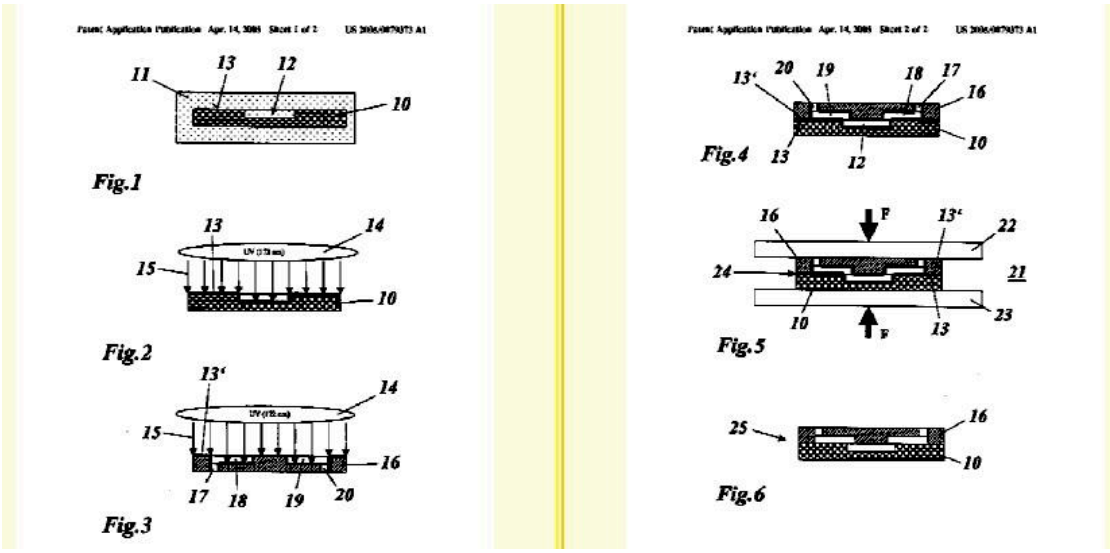

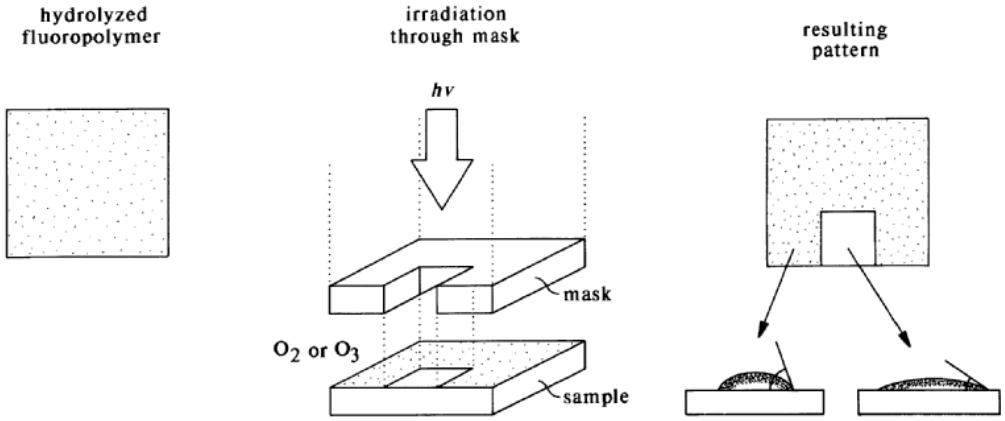
hydrolyzed fluoropolymer
irradiation through mask
resulting pattern
hv
mask
O_2 or O_3
sample

FIG. 6

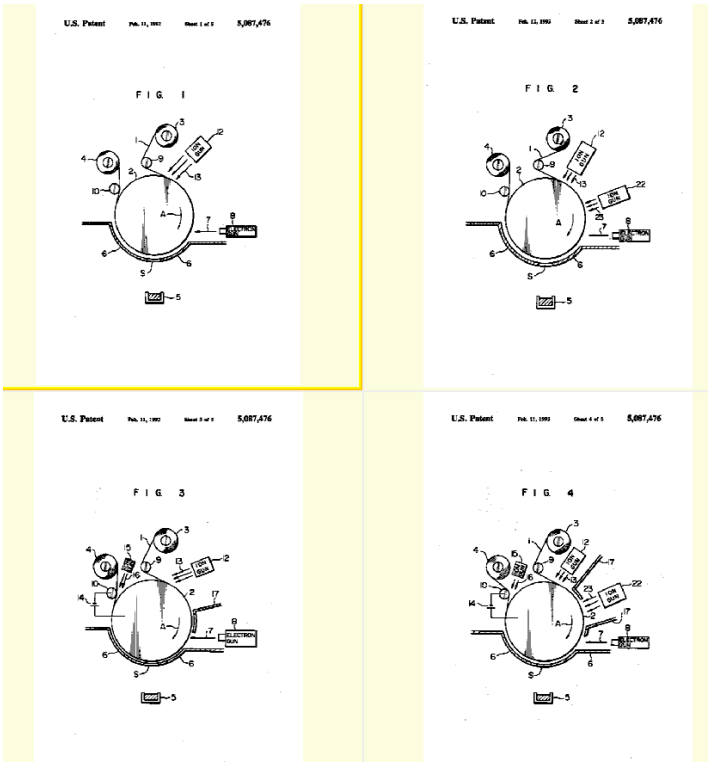
U.S. Patent
FIG. 1
FIG. 2
FIG. 3
FIG. 4

U.S. Patent Nov. 29, 1983 4,417,948

FIG. 1

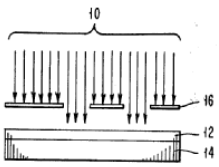

FIG. 2

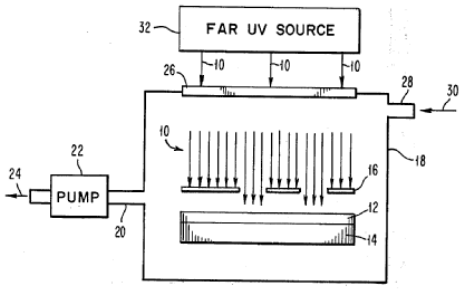

June 2, 1970 YOICHI OKADA ET AL 3,515,615

METHOD FOR BONDING SYNTHETIC RESIN SHEETS AND METAL SHEETS

Filed Aug. 30, 1965 3 Sheets-Sheet 3

FIG. 5

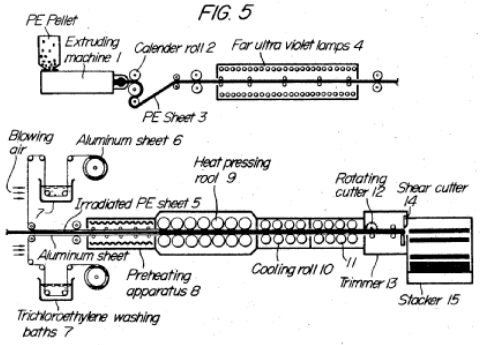

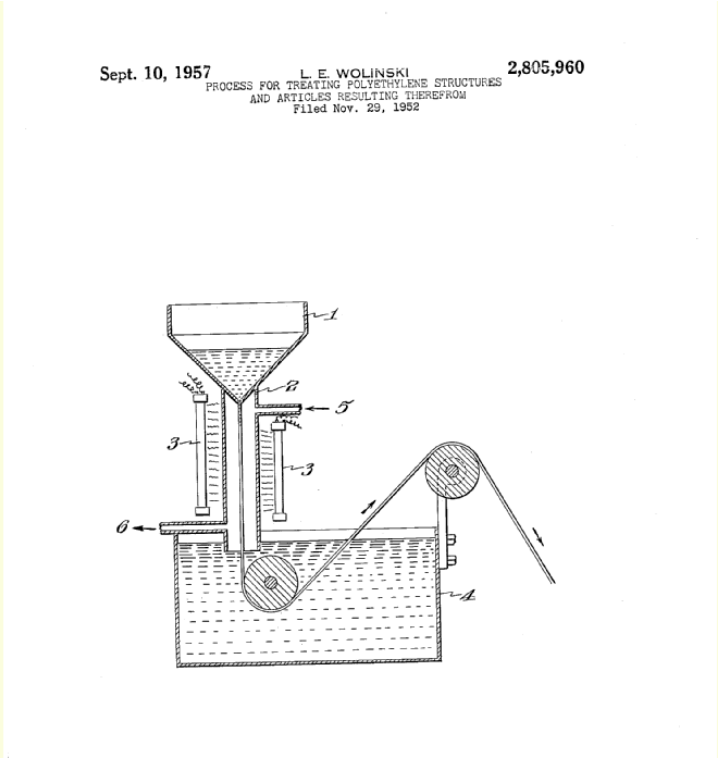

References

Limiting references

This place does not cover:

Pretreatment of surfaces to which liquids or fluent materials are to be applied; by exposure to radiation, using U.V., pretreatment of polymeric substrates	B05D 3/063
Pretreatment of surfaces to which liquids or fluent materials are to be applied; by exposure to radiation, using U.V., after-treatment	B05D 3/065
Pretreatment of surfaces to which liquids or fluent materials are to be applied; by exposure to radiation, using ionising radiations (gamma, X, electrons)	B05D 3/068
Working by laser beam, removal material, plastics	B23K 26/402
Duplicating or marking methods; thermography; marking of plastic artifacts, e.g. with laser	B41M 5/267

Informative references

Attention is drawn to the following places, which may be of interest for search:

Coating by vacuum evaporation; pre-treatment of the material to be coated; cleaning or etching treatment by means of bombardment with energetic particles or radiation	C23C 14/022

B29C 59/165

{of profiled articles, e.g. hollow or tubular articles}

Definition statement

This place covers:

Patent Application Publication May 15, 2008 Sheet 2 of 2 US 2008/0110852 A1

Fig. 3

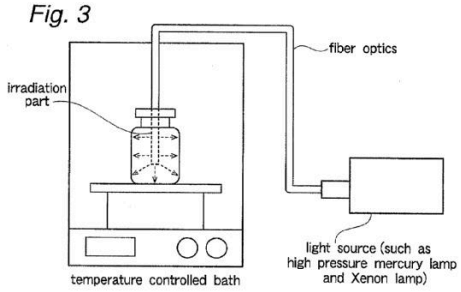

Fig. 4

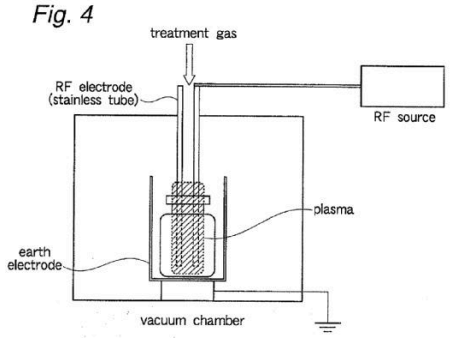

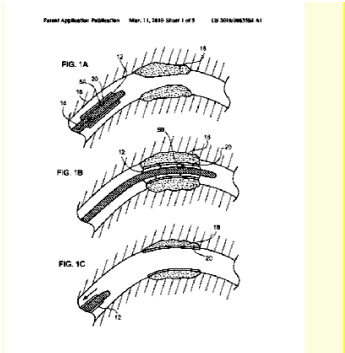

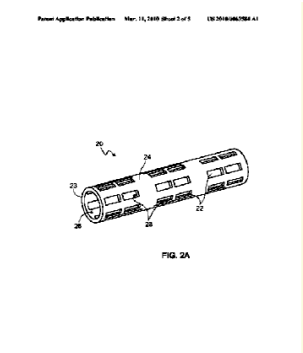

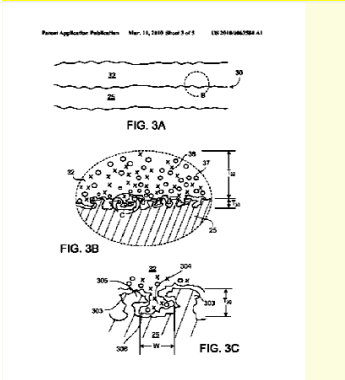

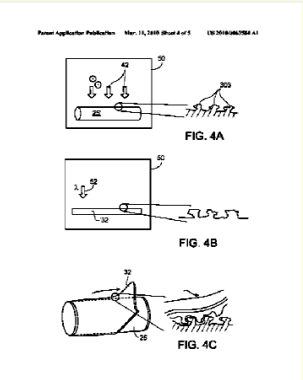

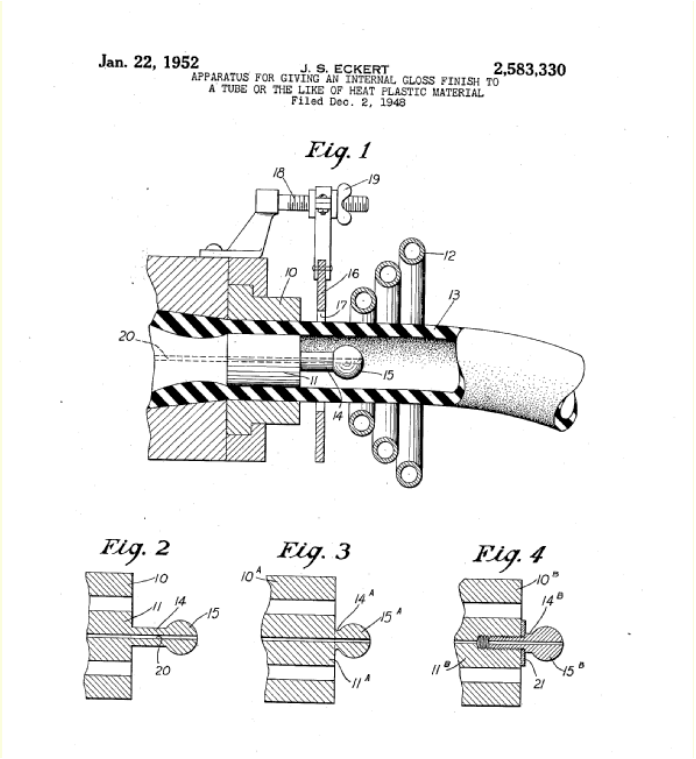

B29C 59/18

by liberation of internal stresses, e.g. plastic memory

Definition statement

This place covers:

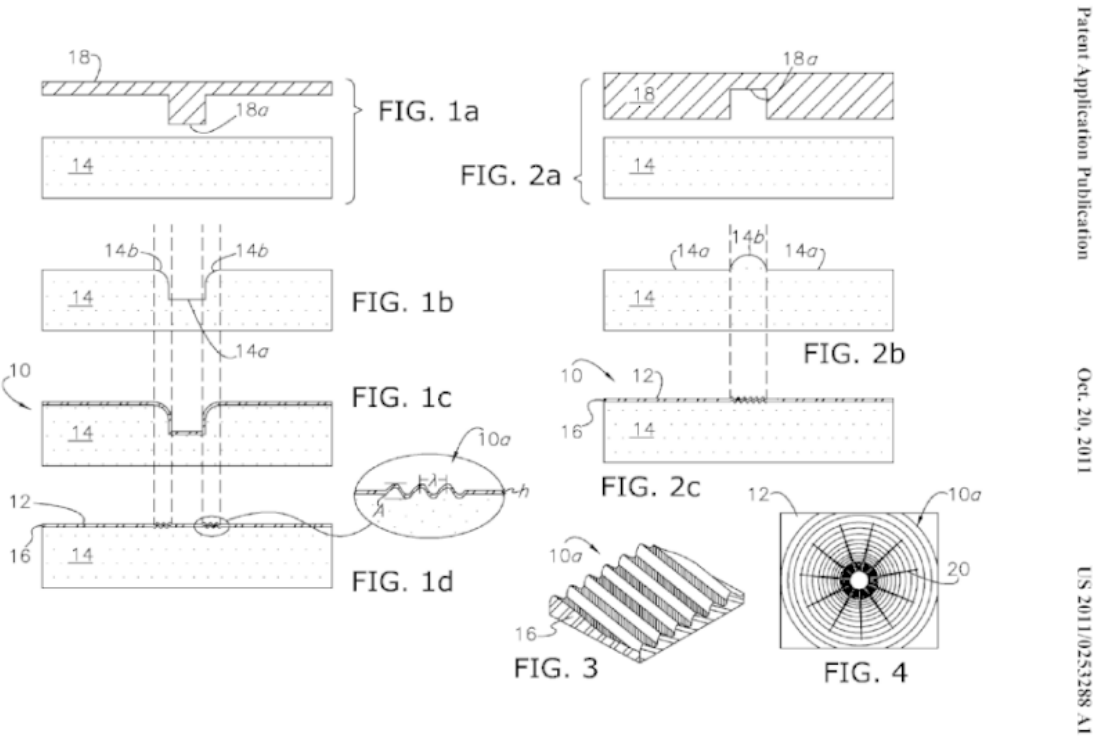

Patent Application Publication Oct. 20, 2011 US 2011/0253288 A1

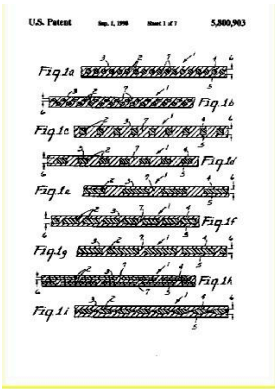

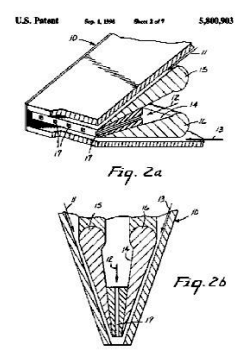

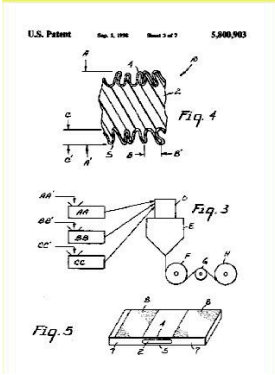

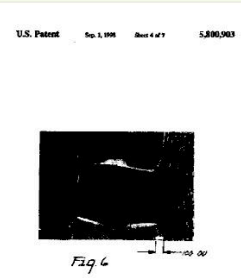

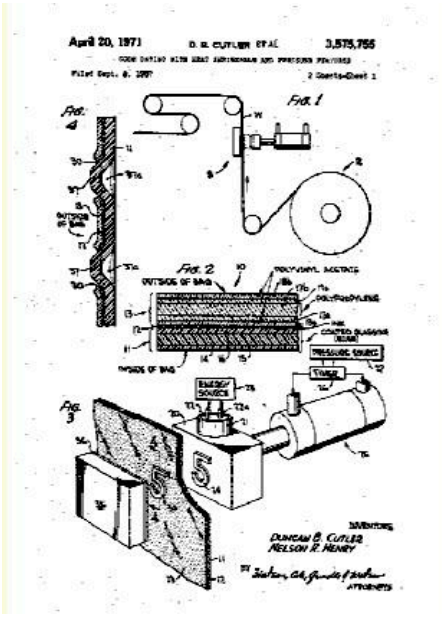

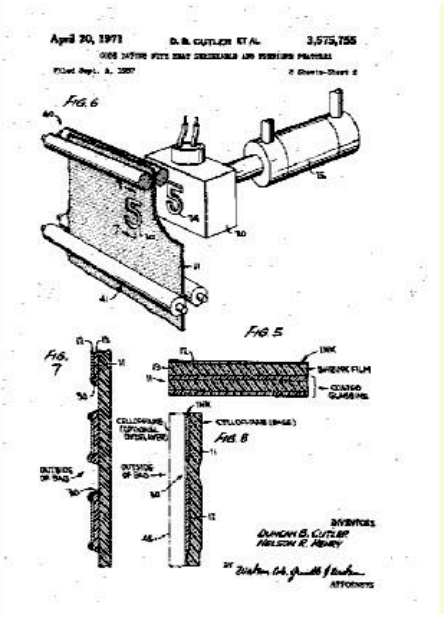

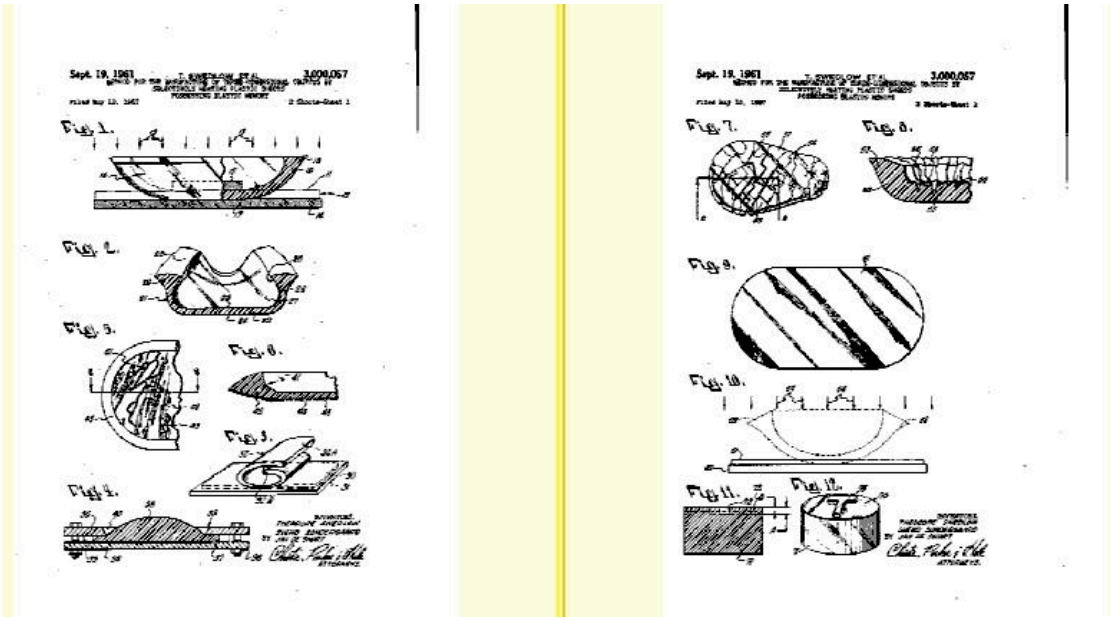

References

Informative references

Attention is drawn to the following places, which may be of interest for search:

Shaping by liberation of internal stresses; thermal shrinking	B29C 61/02

B29C 61/00

Shaping by liberation of internal stresses; Making preforms having internal stresses; Apparatus therefor (for surface shaping B29C 59/18; for lining articles B29C 63/38; for joining preformed parts B29C 65/66 {; for packaging B65B 53/00; connecting arrangements or other fittings for plastics pipes using shrink-down material F16L 47/22, electrical connections insulated using heat shrinking insulating sleeves H01R 4/72; cable junctions protected by sleeves H02G 15/18})

Definition statement

This place covers:

Methods or apparatus for liberation of internal stresses, typically for heat-shrinking

Methods or apparatus for making preforms having internal stresses, typically heat-shrinkable articles

Heating devices specially designed for thermal shrinking.

References

Informative references

Attention is drawn to the following places, which may be of interest for search:

Mechanical power produced by shape memory element	F03G 7/0614
Shrinkage connections	F16B 4/006

Synonyms and Keywords

In patent documents, the following words/expressions are often used as synonyms:

- "shrink", "recover" and "shape memory"

B29C 63/00

Lining or sheathing, i.e. applying preformed layers or sheathings of plastics; Apparatus therefor (B29C 73/00 takes precedence; by blowing B29C 49/00; by thermoforming B29C 51/00)

References

Limiting references

This place does not cover:

Extrusion coating	B29C 48/00
Applying liquid or other fluent coatings	B05D

Informative references

Attention is drawn to the following places, which may be of interest for search:

Inserting a flexible liner inside a pipe for covering leaks	F16L 55/165

B29C 64/00

Additive manufacturing, i.e. manufacturing of three-dimensional [3D] objects by additive deposition, additive agglomeration or additive layering, e.g. by 3D printing, stereolithography or selective laser sintering

Definition statement

This place covers:

Technologies involving the use or application of processes or apparatus that produce three-dimensionally shaped structures by selectively depositing successive layers of material one upon another. In particular it covers processes, apparatus and other aspects of additive manufacturing, i.e., making, repairing, or modifying articles of manufacture by the selective application of multiple layers of material. The applied layers may be applied directly, as in a printing process, or by selective solidification of material onto a substrate or previously developed layers, for example, by selective sintering of a particulate.

Relationships with other classification places

This group B29C 64/00 covers additive manufacturing of plastics or materials in a plastic state, not otherwise provided for.

The subclass B33Y covers additive manufacturing, irrespective of the process or material used. Furthermore, the subclass B33Y is for obligatory supplementary classification of subject matter containing an aspect of additive manufacturing already classified as such in other classification places.

References

Informative references

Attention is drawn to the following places, which may be of interest for search:

Shaping by coating a mould, core or other substrate, i.e. by depositing material and stripping-off the shaped article	B29C 41/00
Moulding by agglomeration	B29C 67/02
Preparation of cocoa products	A23G
Preparation of food or foodstuffs	A23L 5/00
Making of dental prostheses	A61C 13/00
Coating apparatus, in general	B05C
Coating processes, in general	B05D
Manufacture of workpieces or articles from metallic powder characterised by the manner of compacting or sintering	B22F 3/00
Milling, in general	B23C
Build-up welding	B23K 9/04, B23K 26/342
Producing shaped articles from ceramic or cementitious material	B28B 1/00
Methods or apparatus for laminating, e.g. by curing or by ultrasonic bonding	B32B 37/00
Forme preparation	B41C 1/00
Typewriters or selective printers	B41J 2/00
Braille printing	B41M 3/16
Superimposing layers to produce ornamental structures	B44C 3/02
Sintering of ceramic materials	C04B 35/64
Culture of undifferentiated human, animal or plant cells	C12N 5/00
Coating by vacuum evaporation, by sputtering or by ion implantation of the coating forming material	C23C 14/00
Photosensitive materials	G03C, G03F 7/004
Photomechanical production of patterned surfaces	G03F 7/00
Electrographic processes using a charge pattern	G03G 13/00
Programme-control systems for surface or curve machining, making 3D objects, e.g. desktop manufacturing	G05B 19/4099
General purpose image data processing	G06T 1/00
Image enhancement for 2D or 3D images	G06T 5/00
Image analysis for 2D or 3D images	G06T 7/00
Image coding, e.g. from bit-mapped to non bit-mapped	G06T 9/00
3D [Three-dimensional] image rendering	G06T 15/00
3D [Three-dimensional] modelling, e.g. data description of 3D objects	G06T 17/00
Manipulating 3D models or images for computer graphics	G06T 19/00
Geography, e.g. relief models	G09B 25/06
Electron-beam or ion-beam tubes for localised application of thin layers on objects	H01J 37/317

Manufacture of semiconductor or otherwise not provided for electric solid state devices	H01L 21/00
Manufacturing printed circuits by printing of conductive patterns	H05K 3/12

Glossary of terms

In this place, the following terms or expressions are used with the meaning indicated:

3D printing	Additive manufacturing where the buildup of successive layers of material includes the use of a printer-like device having a motor controlled head for dispensing materials that form the layers.
Stereolithography	Additive manufacturing technique where the successive layers of material are formed by selectively hardening regions of polymeric material successively applied to the structure, typically by the use of laser light.

Synonyms and Keywords

In patent documents, the following abbreviations are often used:

SLS	Selective laser sintering
DTM	Desktop manufacturing
LOM	Laminated Object Modelling
3DP, 3D-printing	Three-dimensional printing
SFF	Solid Freeform Fabrication
FDM	Fused Deposition Modelling
3DD	Three-dimensional deposition
SDM	Selective Deposition Modelling
LDM	Layered deposition modelling
3DM	Three-dimensional modelling
BPM	Ballistic Particle Modelling

B29C 64/10

Processes of additive manufacturing

Relationships with other classification places

Additive manufacturing should obligatorily be further be classified in subclass B33Y irrespective of the process or material used.

B29C 64/106

using only liquids or viscous materials, e.g. depositing a continuous bead of viscous material

Definition statement

This place covers:

e.g. extruding thermoplastic material.

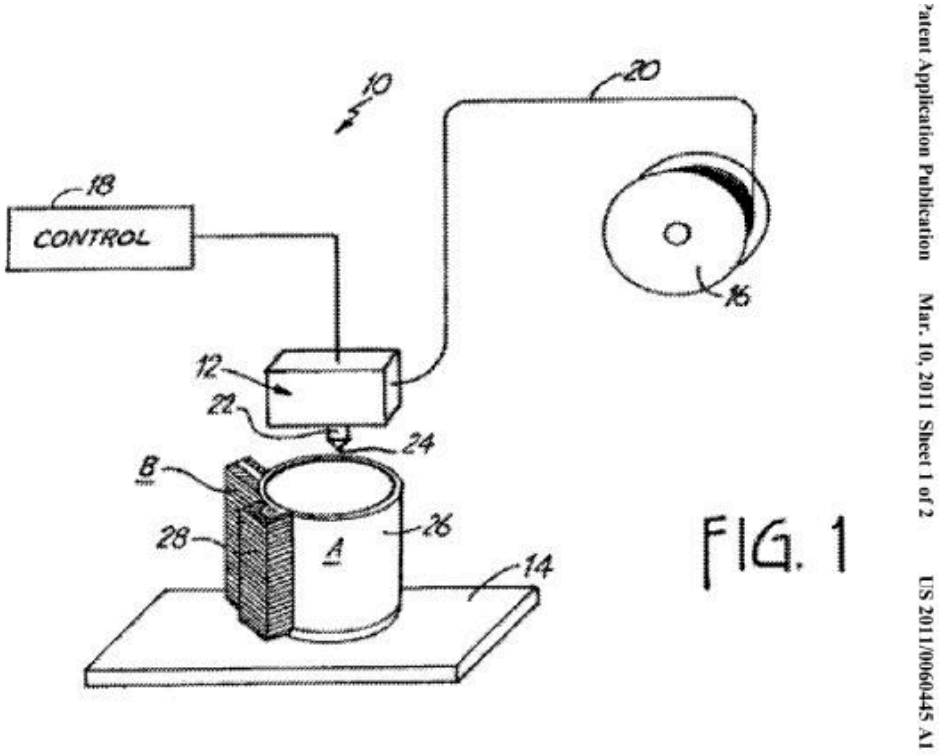

References

Informative references

Attention is drawn to the following places, which may be of interest for search:

Dispensing heads	B29C 31/042
Moving heads for distributing liquid or viscous material into moulds	B29C 31/044
Moving along predetermined circuits or distributing according to patterns	B29C 31/045

B29C 64/124

using layers of liquid which are selectively solidified

Definition statement

This place covers:

[図1]

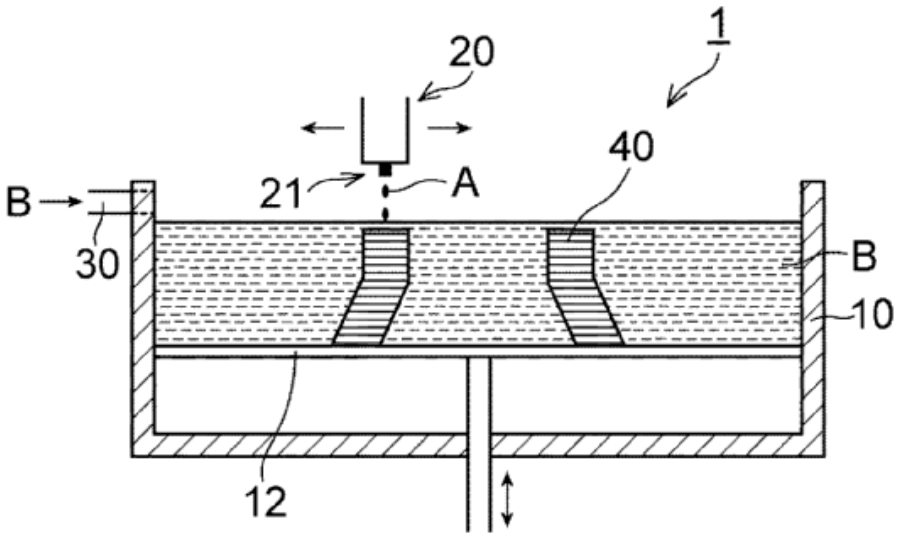

B29C 64/129

characterised by the energy source therefor, e.g. by global irradiation combined with a mask

Definition statement

This place covers:

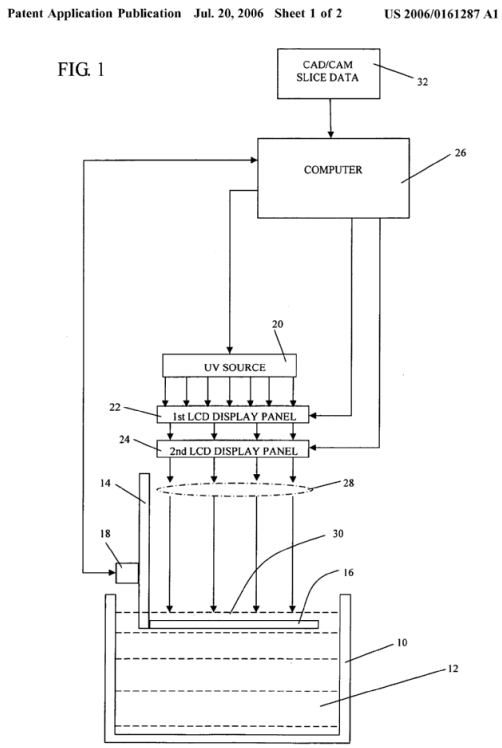

Synonyms and Keywords

In patent documents, the following abbreviations are often used:

LCD	Liquid Crystal Display
MMD	Micromirror Devices

B29C 64/135

the energy source being concentrated, e.g. scanning lasers or focused light sources

Definition statement

This place covers:

EP 1 645 402 A1

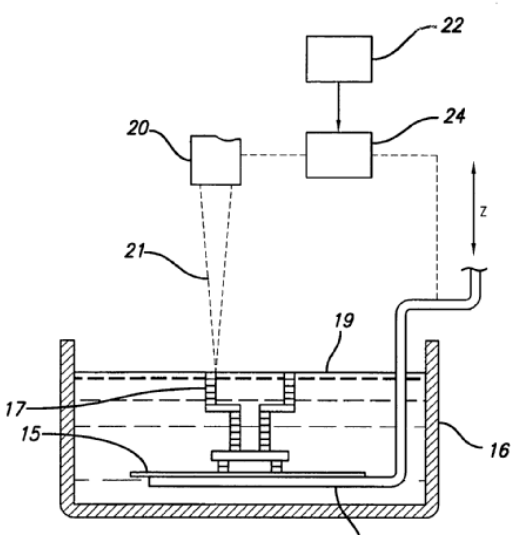

B29C 64/141

using only solid materials

Definition statement

This place covers:

Patent Application Publication Oct. 1, 2009 Sheet 10 of 10 US 2009/0246436 A1

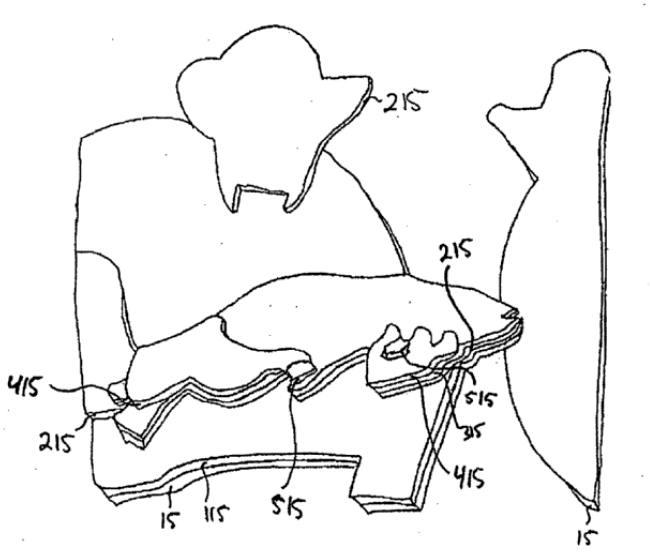

B29C 64/153

using layers of powder being selectively joined, e.g. by selective laser sintering or melting

Definition statement

This place covers:

DE 10 2005 022 308 A1 2006.11.23

Anhängende Zeichnungen

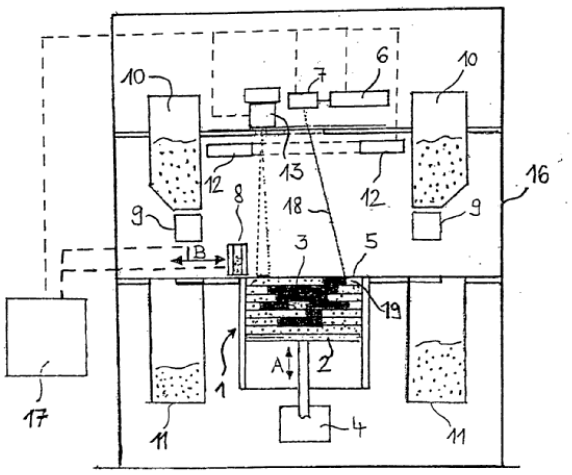

References

Informative references

Attention is drawn to the following places, which may be of interest for search:

laser sintering of metallic powder	B22F 10/20
laser sintering of ceramic powder	C04B 35/64 and C04B 35/65

B29C 64/165

using a combination of solid and fluid materials, e.g. a powder selectively bound by a liquid binder, catalyst, inhibitor or energy absorber

Definition statement

This place covers:

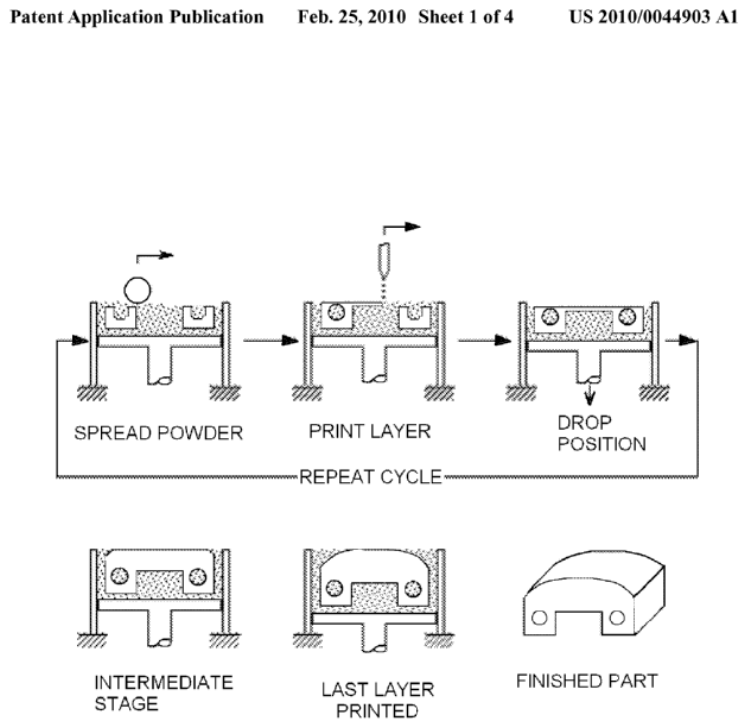

B29C 64/20

Apparatus for additive manufacturing; Details thereof or accessories therefor

Definition statement

This place covers:

- Machines and systems for carrying out additive manufacturing methods to produce objects
- Subcombinations of machines that carry out additive manufacturing methods to produce objects
- Accessories for machines that carry out additive manufacturing methods. Accessories include things attachable to or used in conjunction with an additive manufacturing machine that have a direct association with the additive manufacturing machine, per se.

Relationships with other classification places

Auxiliary operations or equipment, e.g. for treating or handling the raw materials for additively manufacturing objects, are classified in B29C 64/30.

Additive manufacturing should obligatorily be further be classified in subclass B33Y irrespective of the process or material used.

B29C 64/30

Auxiliary operations or equipment

Definition statement

This place covers:

The handling or treating of materials used in an additive manufacturing process, or the subsequent treating or handling of objects produced by an additive manufacturing process. Also covered are ancillary components or process steps not directly involving the additive manufacturing process or apparatus, per se, such as cleaning raw materials used in the additive manufacturing process, or recycling residual material from the manufacturing process.

Relationships with other classification places

Additive manufacturing should obligatorily be further be classified in subclass B33Y irrespective of the process or material used.

B29C 64/35

Cleaning

Definition statement

This place covers:

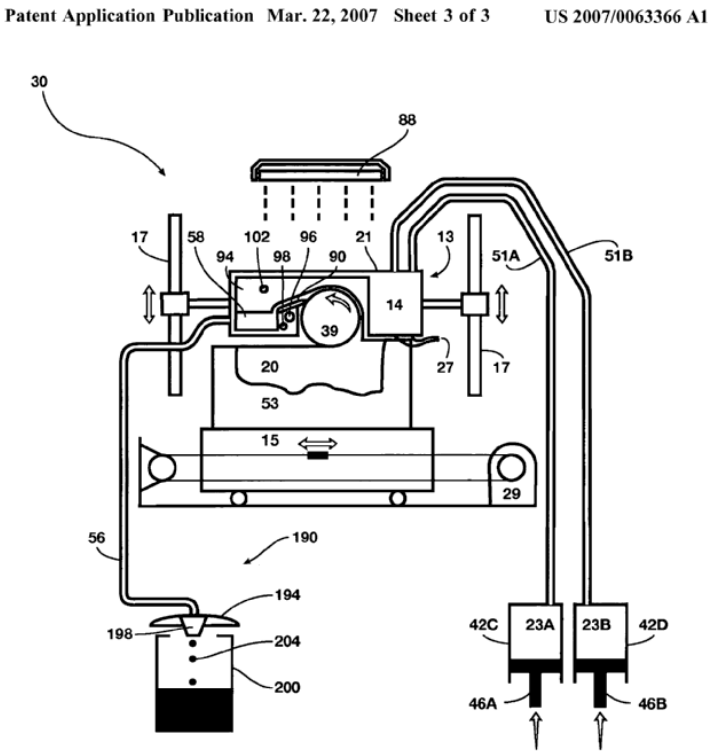

References

Informative references

Attention is drawn to the following places, which may be of interest for search:

Deburring or deflashing	B29C 37/02
Surface shaping	B29C 59/00

After treatment	B29C 71/00
Repairing	B29C 73/00
Coating	B05D
Cleaning by brushing in general	B08B 1/00
Cleaning by jet rinsing in general	B08B 3/02
Cleaning by immersion in general	B08B 3/04
Cleaning by blowing in general	B08B 5/02
Cleaning by vacuum in general	B08B 5/04

B29C 64/386

Data acquisition or data processing for additive manufacturing

Definition statement

This place covers:

- Data processing aspects related to an object to be manufactured in an additive manufacturing process, specially adapted for processing of plastics or materials in a plastic state, not otherwise provided for, for example, combining together data from different sources to produce composite production data for said object to be made.
- Acquiring, sending, or receiving data that will be used in additive manufacturing, either internal or external to the additive manufacturing apparatus, specially adapted for processing of plastics or materials in a plastic state, not otherwise provided for.

Illustrative example of subject matter classified in this group:

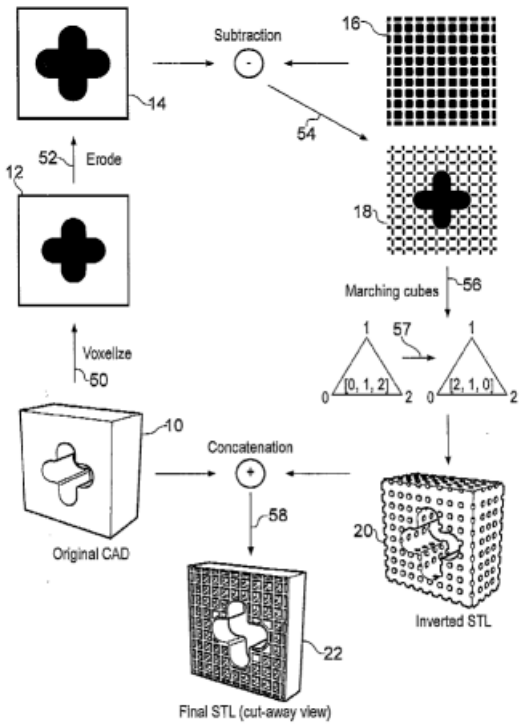

Relationships with other classification places

Additive manufacturing should obligatorily be further be classified in subclass B33Y irrespective of the process or material used.

B29C 64/393

for controlling or regulating additive manufacturing processes

Definition statement

This place covers:

Data processing specially adapted for managing the additive manufacturing process performed by one or more additive manufacturing apparatuses, specially adapted for processing of plastics or materials in a plastic state, not otherwise provided for.

Illustrative example of subject matter classified in this group:

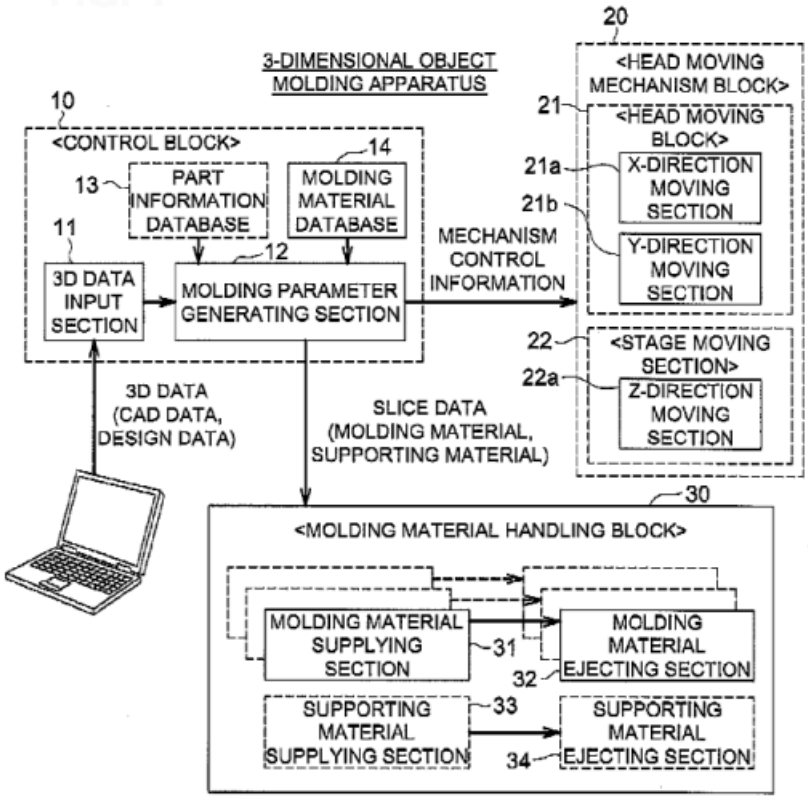

Relationships with other classification places

Additive manufacturing should obligatorily be further be classified in subclass B33Y irrespective of the process or material used.

B29C 64/40

Structures for supporting 3D objects during manufacture and intended to be sacrificed after completion thereof

Definition statement

This place covers:

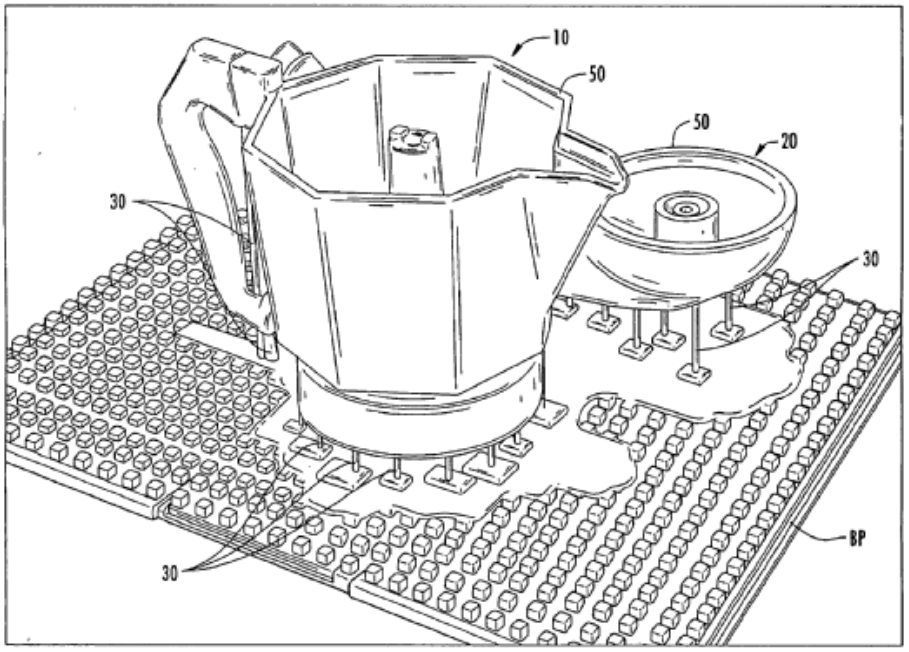

FIG. 2

Patent Application Publication Mar. 19, 2009 Sheet 2 of 28 US 2009/0072447 A1

B29C 65/00

Joining {or sealing} of preformed parts {, e.g. welding of plastics materials}; Apparatus therefor {(general aspects of processes or apparatus for joining preformed parts B29C 66/00; using porous material formed by internal pressure generated therein for joining preformed parts B29C 44/1228, B29C 44/326)}

Definition statement

This place covers:

Joining by heating (cf. B29C 65/02 and subgroups);

Joining using adhesives (cf. B29C 65/48 and subgroups);

Joining using mechanical means (cf. B29C 65/56 and subgroups);

Joining and severing (cf. B29C 65/74 and subgroups);

Means for handling the parts to be joined (cf. B29C 65/78 and subgroups);

Testing the joints obtained by processes as foreseen in this main group (cf. B29C 65/82 and subgroups).

References

Limiting references

This place does not cover:

General aspects of processes or apparatus for joining preformed parts	B29C 66/00

Application-oriented references

Examples of places where the subject matter of this place is covered when specially adapted, used for a particular purpose, or incorporated in a larger system:

Devices or methods of sealing or securing package folds or closures	B65B 51/00

Informative references

Attention is drawn to the following places, which may be of interest for search:

Manufacture of lost patterns, made from expanded plastic materials, by assembling preformed parts	B22C 7/026
Making preforms by assembling performed material	B29B 11/04
Making of boxes, cartons, envelopes, or bags	B31B
Assembling of microstructural devices by bonding of two components	B81C 3/00
Chemical aspects of bonding of a preformed macromolecular material to the same or other solid material	C08J 5/12
Adhesive processes in general	C09J 5/00
Devices for fastening or securing constructional elements or machine parts together	F16B
Splicing of light guides	G02B 6/255

Special rules of classification

Patent literature (e.g. patent applications, patent specifications):

Claims / claimed subject-matter:

Independent claims: compulsory invention information;

Dependent claims: at least compulsory additional information (or compulsory invention information if appropriate).

Figures - depicted subject-matter: at least compulsory additional information (or compulsory invention information if appropriate).

Description - described subject-matter: at least desirable additional (or compulsory invention information if appropriate).

Tables: at least compulsory additional information.

Non-patent literature (e.g. scientific non-patent publications):

Figures - depicted subject-matter: compulsory invention information;

Abstract: compulsory invention information;

Description: at least desirable additional information (or compulsory invention information if appropriate).

N.B.: in this main group, it is compulsory that any disclosed aspect relating to the invention is identified by the corresponding classification code(s).

B29C 65/004

{Cold joining}

References

Informative references

Attention is drawn to the following places, which may be of interest for search:

Cold vulcanisation	B29C 35/18

B29C 65/008

{making use of electrostatic charges (holding means using electrostatic forces to hold at least one of the parts to be joined B29C 65/7852)}

Definition statement

This place covers:

Example 1, from

DE1104679:

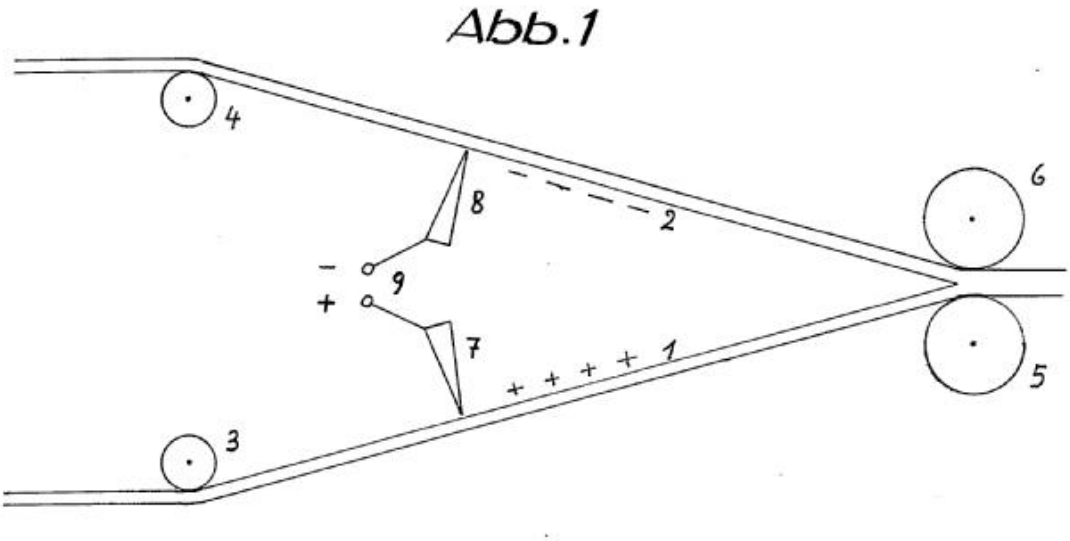

B29C 65/02

by heating, with or without pressure

References

Informative references

Attention is drawn to the following places, which may be of interest for search:

Attachments of seat coverings by thermal welding	B60N 2/5866
Attachments of removable protective seat coverings by thermal welding	B60N 2/6072
Closing containers or receptacles after filling, by applying separate preformed closures, e.g. lids, covers, securing said closures on said containers by heat-sealing	B65B 7/2878
Securing ends of binding material by welding or heat-sealing	B65B 13/32
Devices for, or methods of, sealing or securing package folds or closures, by applying or generating heat or pressure or combinations thereof	B65B 51/10
Devices, e.g. jaws, for applying pressure and heat, specially adapted for producing longitudinal or transverse seams in package web or tubes, e.g. for subdividing filled tubes	B65B 51/30
Chemical aspects of bonding of a preformed macromolecular material to the same or other solid material by heating	C08J 5/121
Joining multiple sections together by welding, for assembling air intake systems	F02M 35/1036

B29C 65/04

Dielectric heating, e.g. high-frequency welding {, i.e. radio frequency welding of plastic materials having dielectric properties, e.g. PVC}

References

Informative references

Attention is drawn to the following places, which may be of interest for search:

Curing by dielectric heating	B29C 35/12
Non-woven fabrics formed from fleeces or layers composed of fibres by welding together the fibres by radio-frequency heating	D04H 1/554

B29C 65/06

using friction, e.g. spin welding {(non-plastics elements to plastic elements B29C 65/645)}

References

Informative references

Attention is drawn to the following places, which may be of interest for search:

Heating or curing using friction	B29C 35/0255
Friction welding of metals	B23K 20/12

Attaching together paper or cardboard sheets, strips, or webs by friction	B31F 5/008
Securing ends of binding material by friction welding	B65B 13/322
Devices for, or methods of, sealing or securing package folds or closures by friction welding	B65B 51/222

B29C 65/0618

{Linear}

Definition statement

This place covers:

Example 1, from

XP001177273:

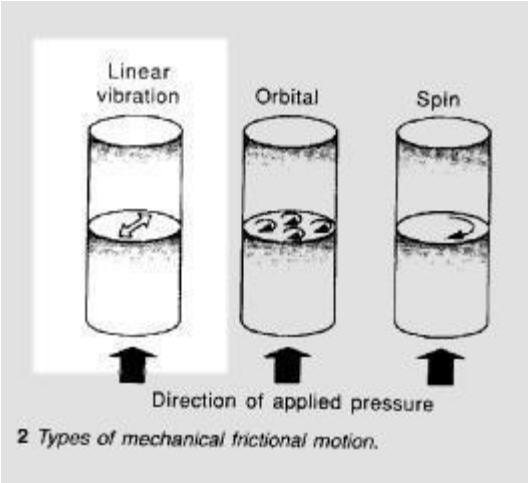

2 *Types of mechanical frictional motion.*

Example 2, from

EP2380726:

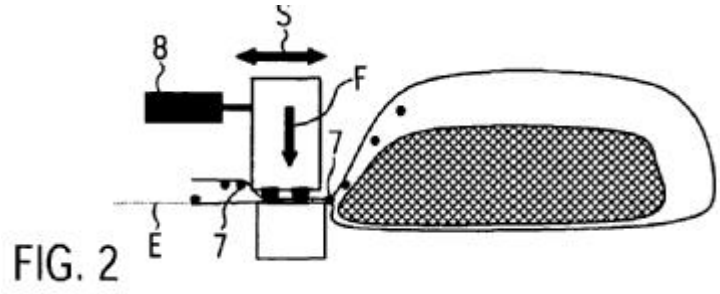

FIG. 2

B29C 65/0627

{Angular, i.e. torsional (B29C 65/082 takes precedence)}

Definition statement

This place covers:

Example 1, from

EP2380726:

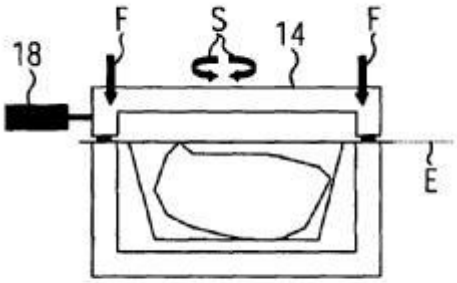

FIG. 6

B29C 65/0636

{Orbital}

Definition statement

This place covers:

Example 1, from

XP001177273:

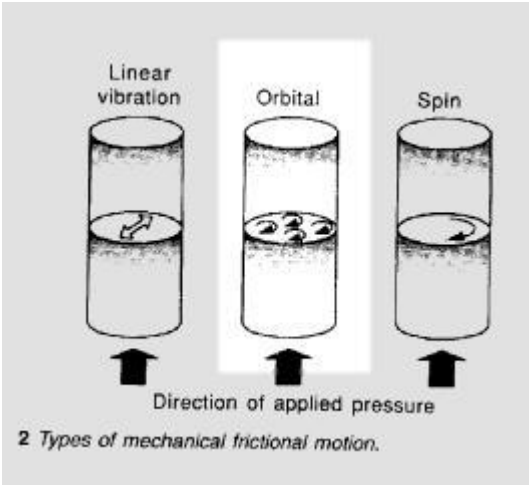

2 *Types of mechanical frictional motion.*

B29C 65/0672

{Spin welding}

Definition statement

This place covers:

Example 1, from

US2007262488:

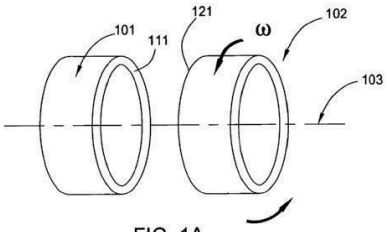

FIG. 1A

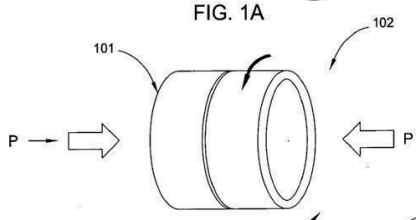

FIG. 1B

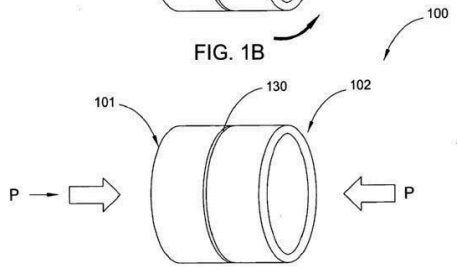

FIG. 1C

Example 2, from

JP10193461:

【図6】

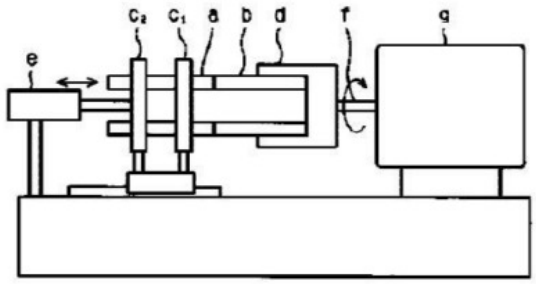

【図9】

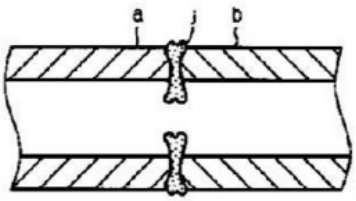

B29C 65/0681

{created by a tool}

Definition statement

This place covers:

Example 1, from

DE10238550:

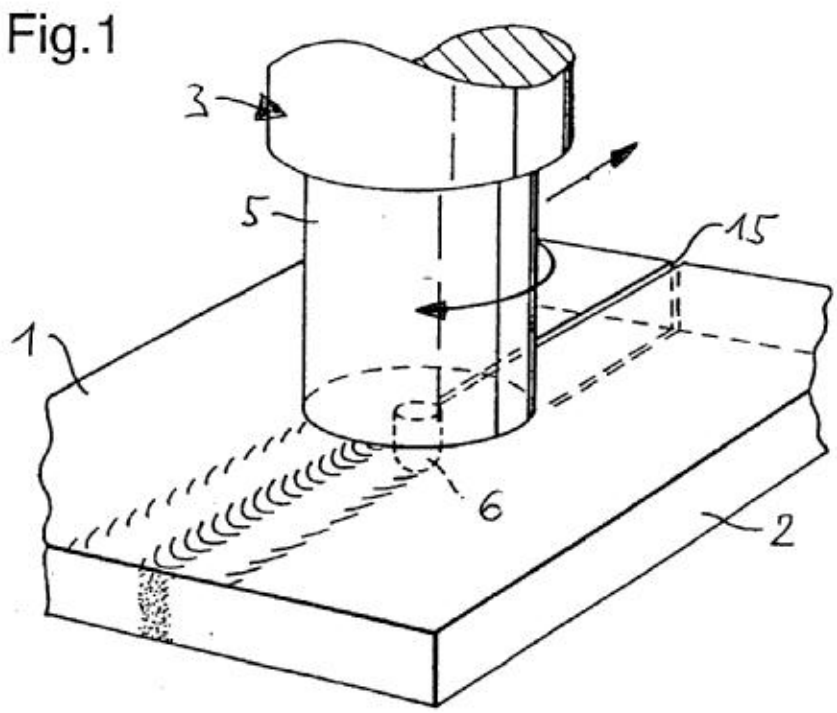

References

Informative references

Attention is drawn to the following places, which may be of interest for search:

Friction stir welding of metals	B23K 20/122

B29C 65/069

{the welding tool cooperating with specially formed features of at least one of the parts to be joined, e.g. cooperating with holes or ribs of at least one of the parts to be joined}

Definition statement

This place covers:

Example 1, from

JP5024114:

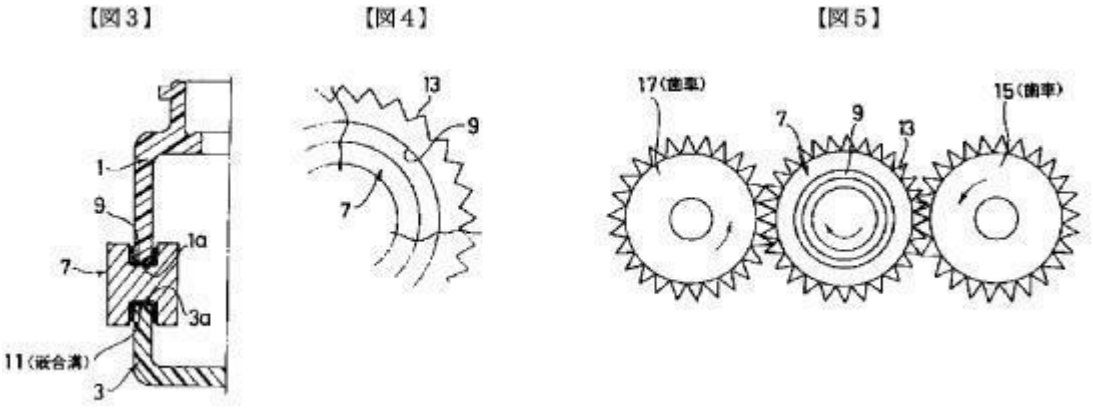

Example 2, from

US2006255590:

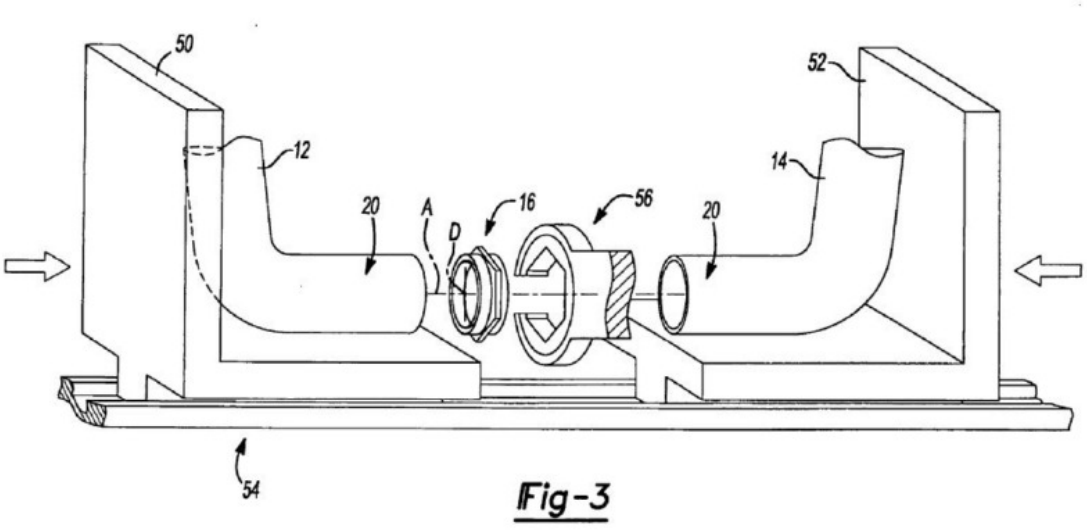

Fig-3

B29C 65/08

using ultrasonic vibrations {(non-plastics element to plastics elements B29C 65/645)}

Definition statement

This place covers:

Example 1, from

JP11348132:

【図3】

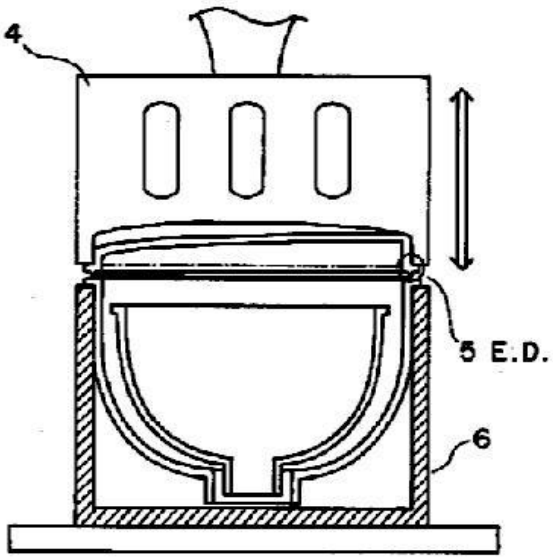

References

Informative references

Attention is drawn to the following places, which may be of interest for search:

Heating or curing using ultrasonic or sonic vibrations	B29C 35/0261
Methods or apparatus for generating or transmitting mechanical vibrations of ultrasonic frequency	B06B
Ultrasonic welding of metals	B23K 20/10
Attaching together paper or cardboard sheets, strips, or webs by ultrasonic vibrations	B31F 5/008
Securing ends of binding material by ultrasonic welding	B65B 13/325
Devices for, or methods of, sealing or securing package folds or closures by ultrasonic welding	B65B 51/225
Methods of, or devices for, interconnecting successive lengths of filamentary material by welding using ultrasonic means	B65H 69/085
Non-woven fabrics formed from fleeces or layers composed of fibres by welding together the fibres by ultrasonic heating	D04H 1/555

B29C 65/081

{having a component of vibration not perpendicular to the welding surface}

Definition statement

This place covers:

Example 1, from

JP11348132:

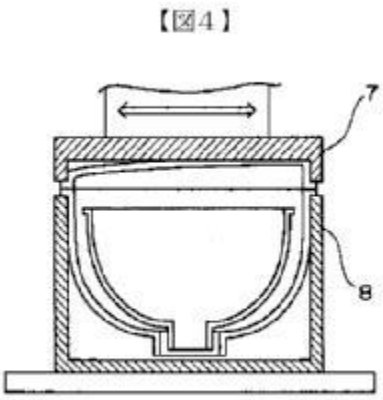

Example 2, from

DE1957216:

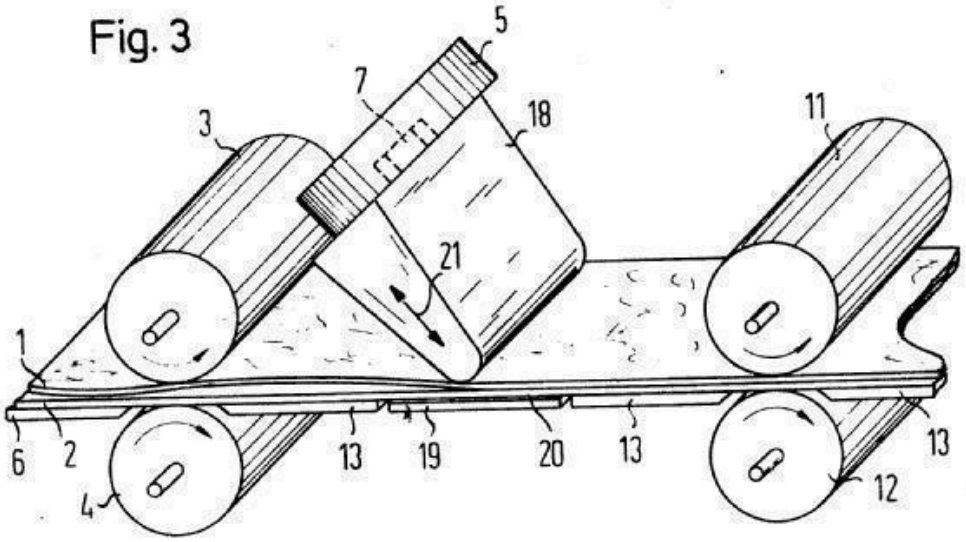

Example 3, from

DE3911634:

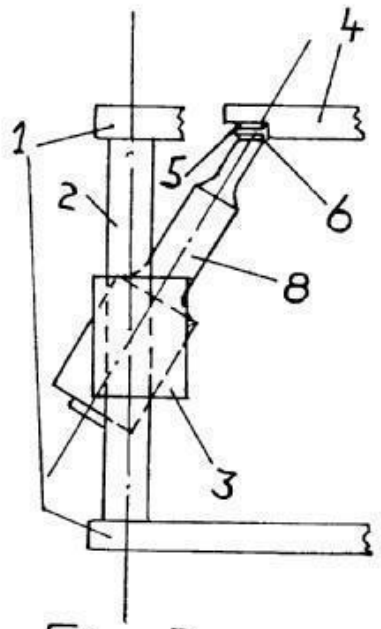

Fig. 3

B29C 65/082

{Angular, i.e. torsional ultrasonic welding}

Definition statement

This place covers:

Example 1, from

EP2269807:

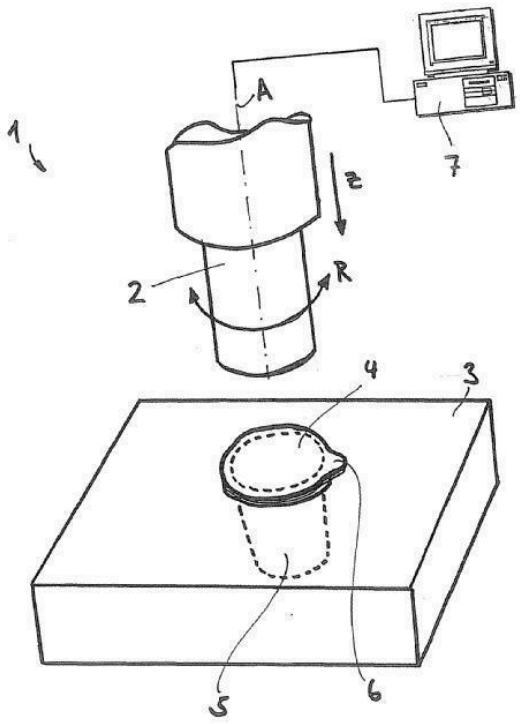

Example 2, from

EP1930148:

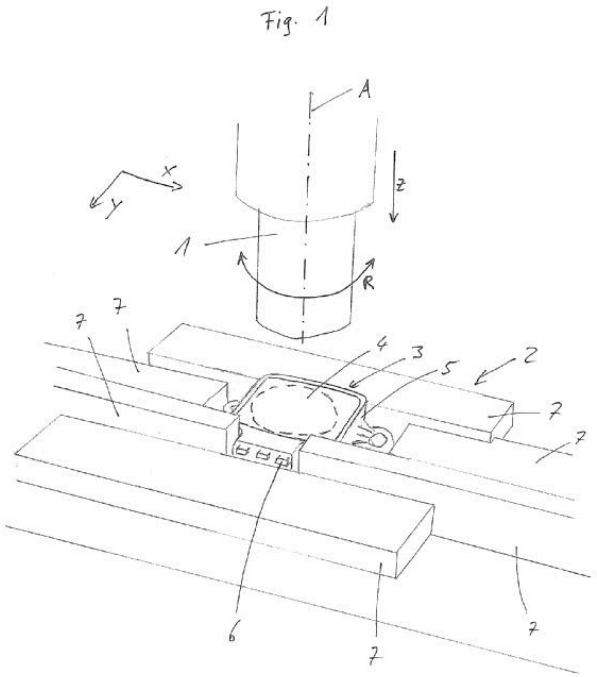

B29C 65/085

{using a rotary sonotrode}

Definition statement

This place covers:

Example 1, from

JP11170404:

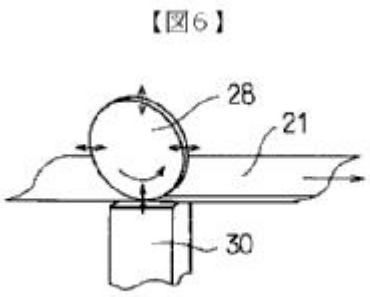

B29C 65/086

{using a rotary anvil}

Definition statement

This place covers:

Example 1, from

JP11170404:

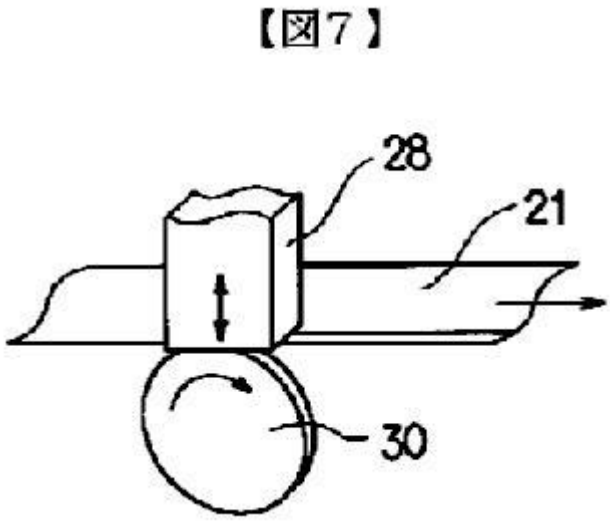

B29C 65/087

{using both a rotary sonotrode and a rotary anvil}

Definition statement

This place covers:

Example 1, from

JP11170404:

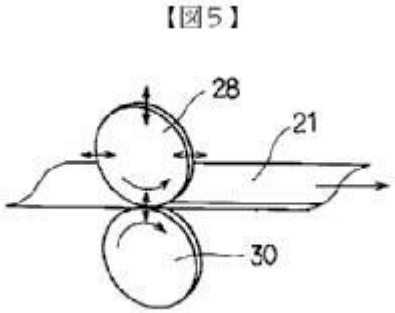

B29C 65/088

{using several cooperating sonotrodes, i.e. interacting with each other, e.g. for realising the same joint}

Definition statement

This place covers:

Example 1, from

DE2251521:

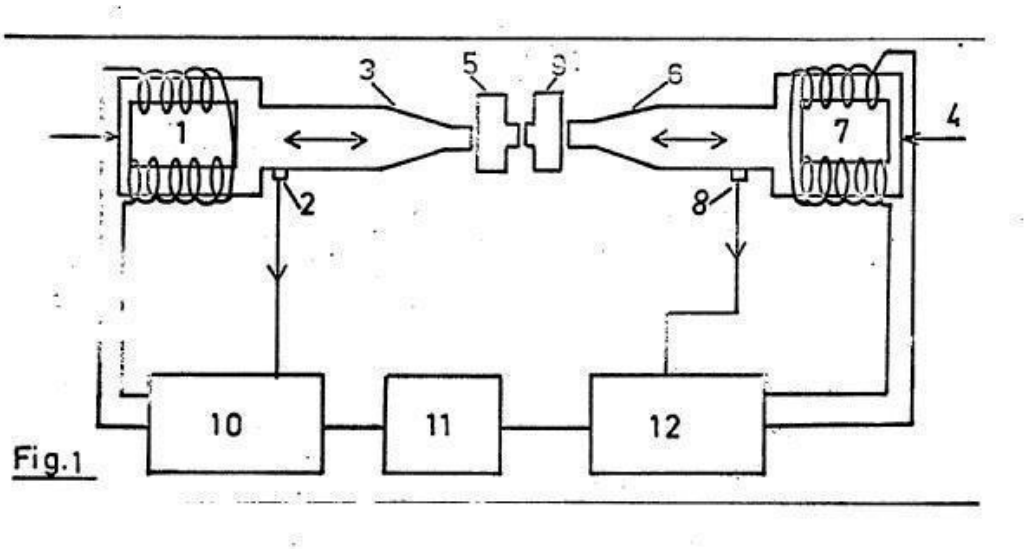

Example 2, from

DE3929770:

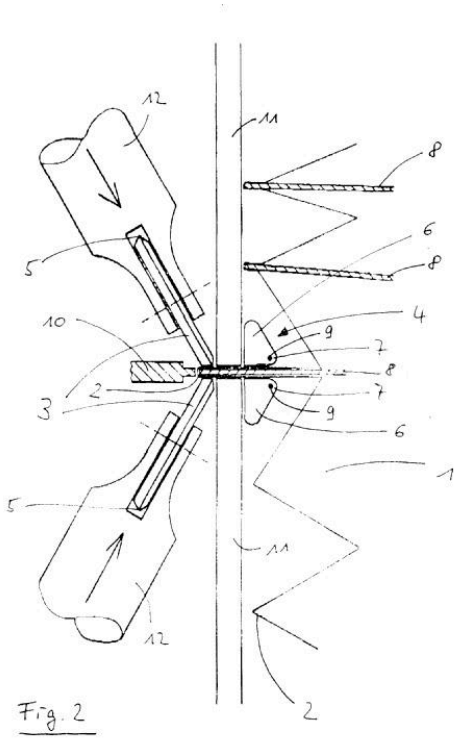

B29C 65/10

using hot gases {(e.g. combustion gases) or flames coming in contact with at least one of the parts to be joined}

Definition statement

This place covers:

Example 1, from

WO2004099488:

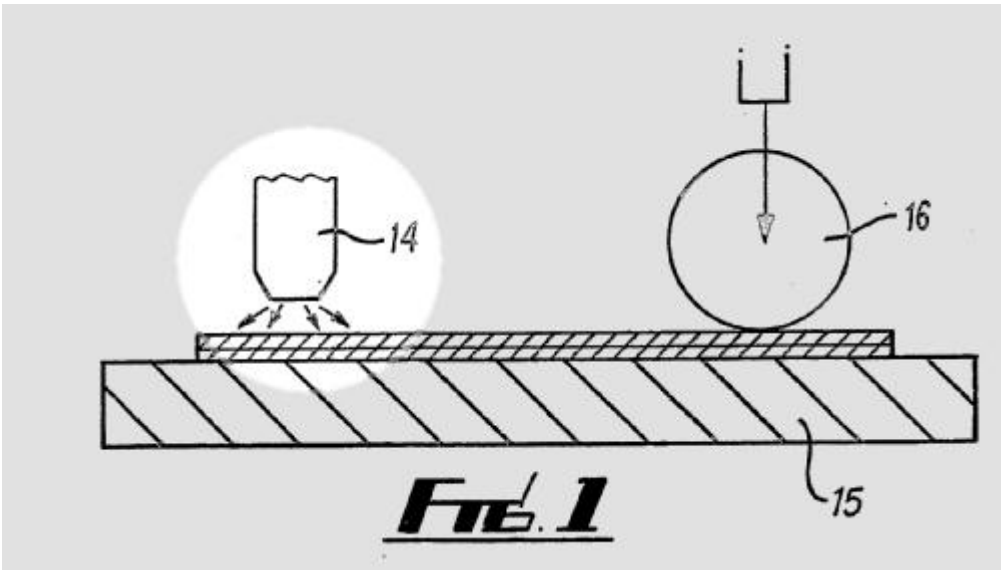

References

Informative references

Attention is drawn to the following places, which may be of interest for search:

Heating or curing using gas or flames	B29C 35/045
Soldering with the use of hot gas	B23K 1/00
Gas flame welding of metals	B23K 5/00
Device for, or methods of, sealing or securing package folds or closures by applying heat using fluids, e.g. hot-air jets	B65B 51/20

B29C 65/103

{direct heating both surfaces to be joined}

Definition statement

This place covers:

Example 1, from

WO2004099488:

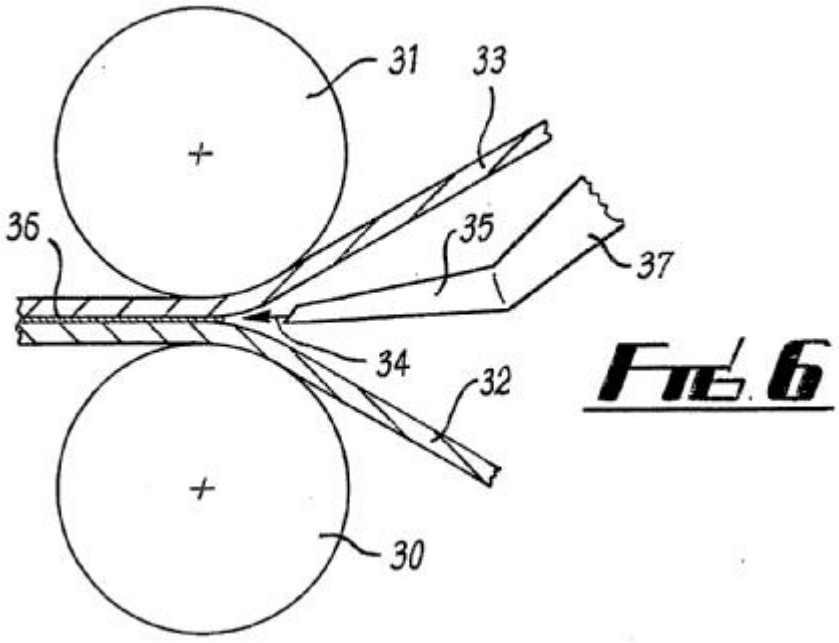

FIG. 6

B29C 65/106

{using flames coming in contact with at least one of the parts to be joined}

Definition statement

This place covers:

Example 1, from

JP60048331:

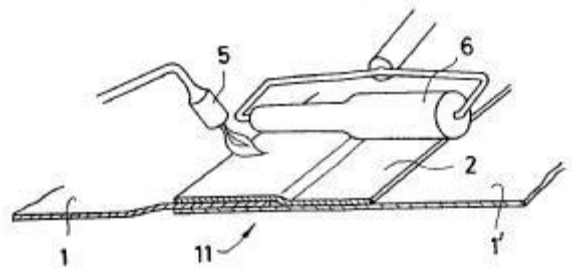

B29C 65/12

and welding bar

Definition statement

This place covers:

Example 1, from

DE29713474U:

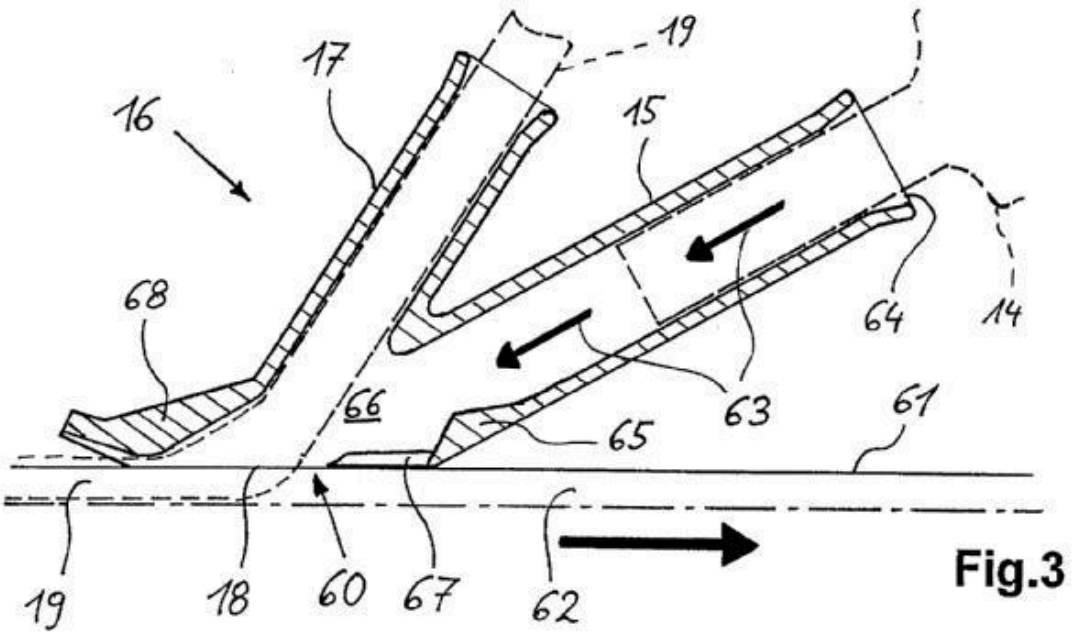

Fig.3

B29C 65/14

using wave energy {, i.e. electromagnetic radiation,} or particle radiation {(using mechanical waves B29C 65/06; using ultrasonic waves B29C 65/08; pressing means transparent to electromagnetic radiation B29C 66/81267)}

References

Informative references

Attention is drawn to the following places, which may be of interest for search:

Heating or curing by wave energy or particle radiation	B29C 35/08

Medical tube couplings for connecting tubes having sealed ends, both tube ends being sealed by meltable membranes pierced after connection by use of heat, e.g. using radiant energy	A61M 39/143
Soldering by means of radiant energy	B23K 1/005
Soldering by means of beams, e.g. E.B.	B23K 1/0056

B29C 65/1412

{Infrared [IR] radiation}

References

Informative references

Attention is drawn to the following places, which may be of interest for search:

Soldering by means of I.R.	B23K 1/005
Non-woven fabrics formed from fleeces or layers composed of fibres by welding together the fibres by infrared heating	D04H 1/556

B29C 65/1432

{direct heating of the surfaces to be joined}

Definition statement

This place covers:

Example 1, from

DE845564:

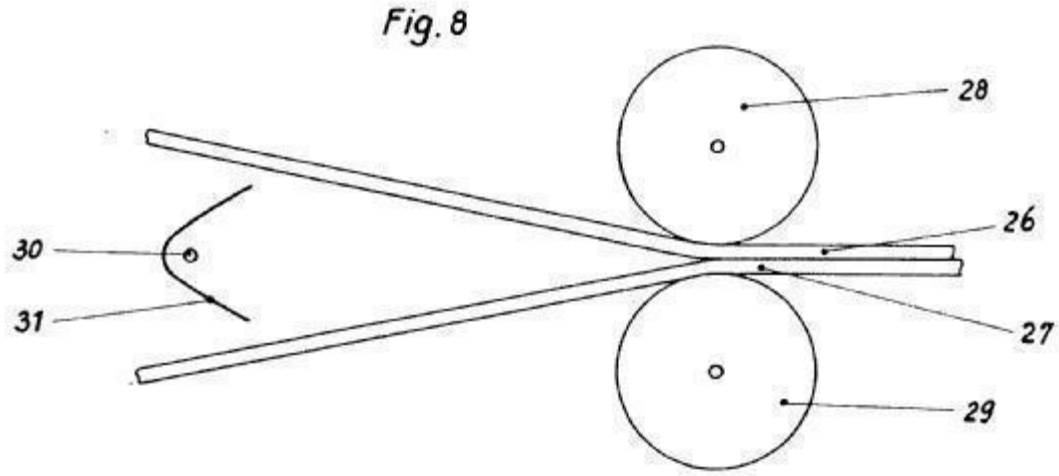

Example 2, from

EP0313731:

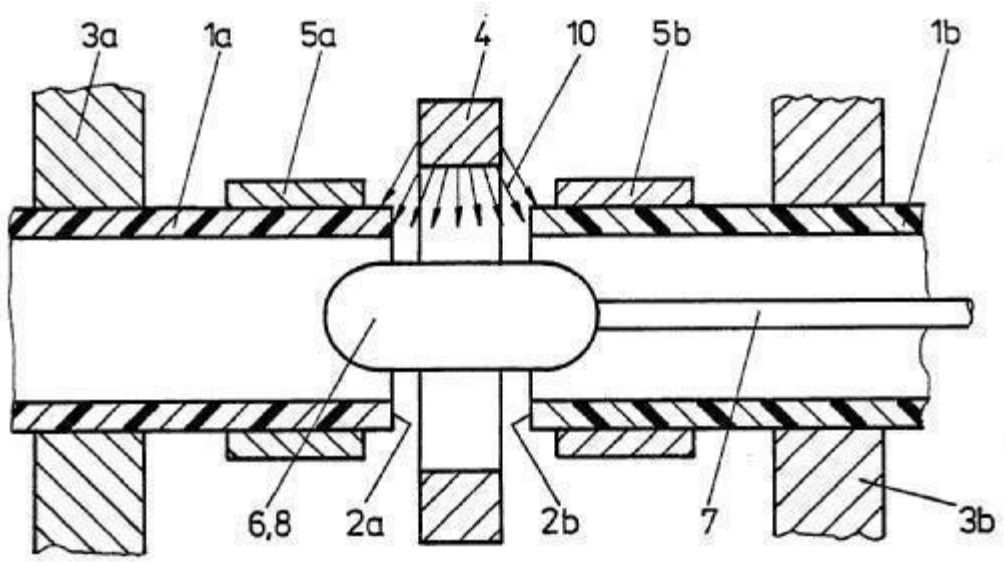

B29C 65/1435

{at least passing through one of the parts to be joined, i.e. transmission welding}

Definition statement

This place covers:

Example 1, from

GB2103147:

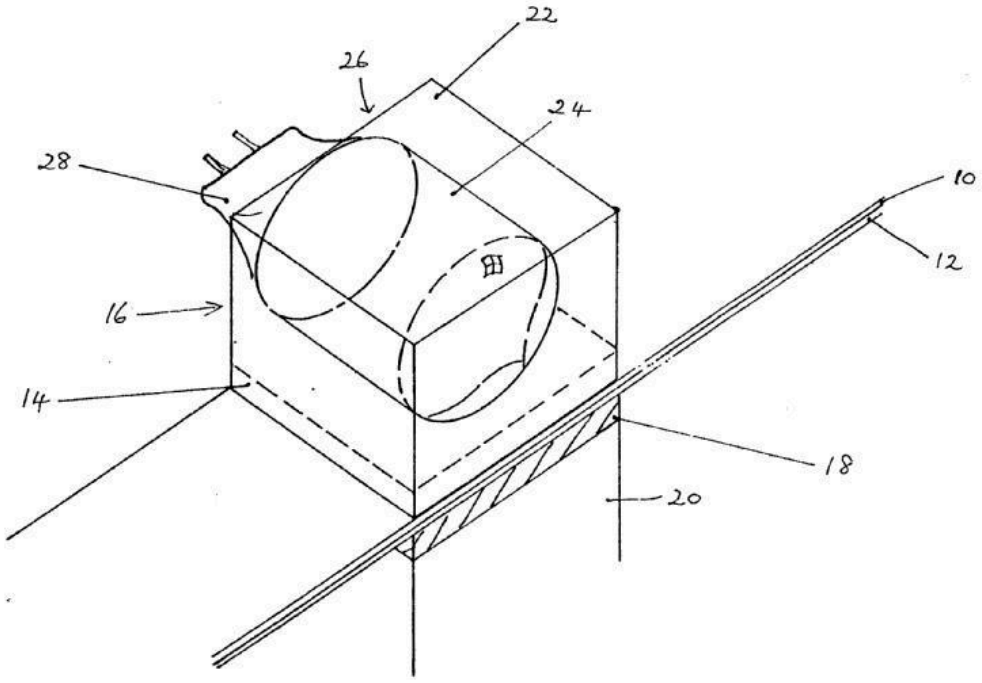

B29C 65/1438

{focusing the wave energy or particle radiation on the interface}

Definition statement

This place covers:

Example 1, from

BE629609:

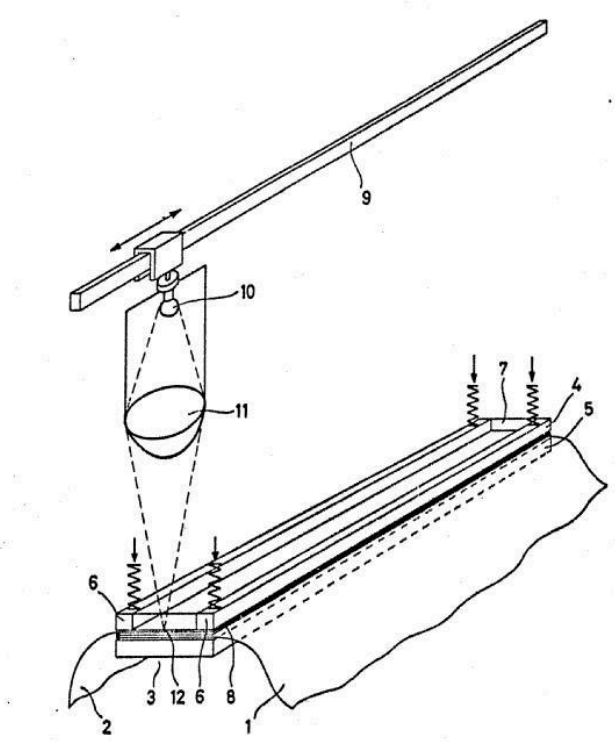

B29C 65/1441

{making use of a reflector on the opposite side, e.g. a polished mandrel or a mirror (pressing means reflective to electromagnetic radiation B29C 66/81268)}

Definition statement

This place covers:

Example 1, from

DE845564:

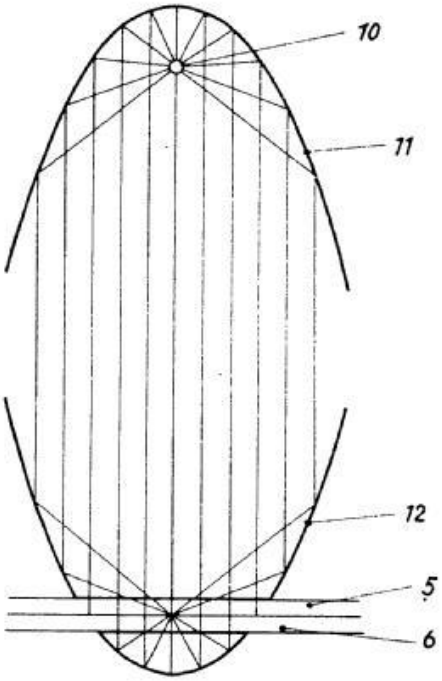

B29C 65/1445

{heating both sides of the joint}

Definition statement

This place covers:

Example 1, from

EP0415068:

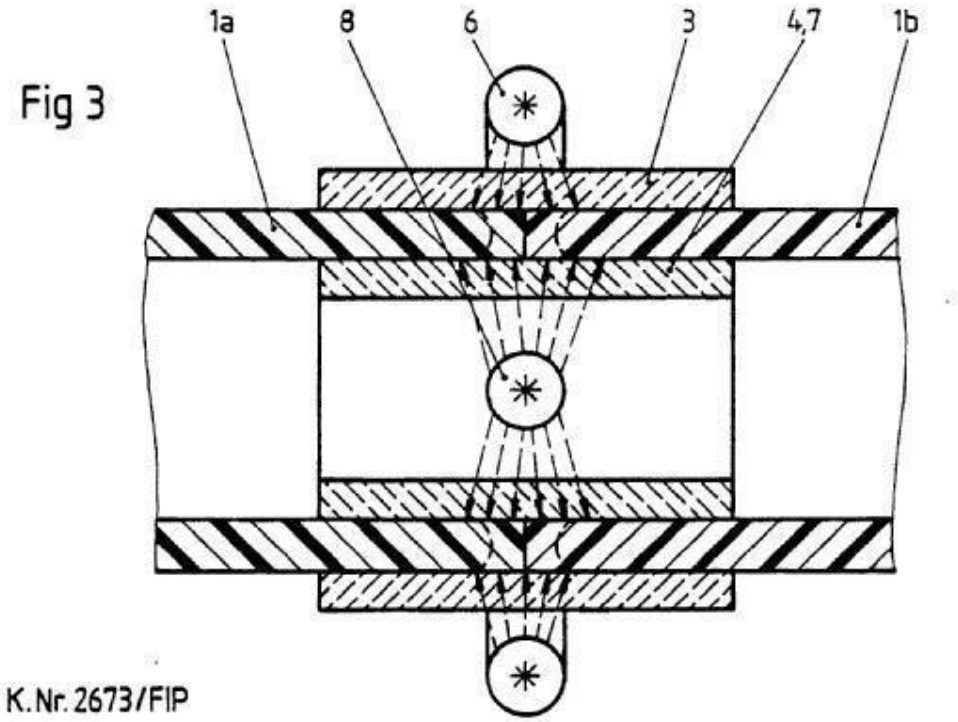

Example 2, from

DE938499:

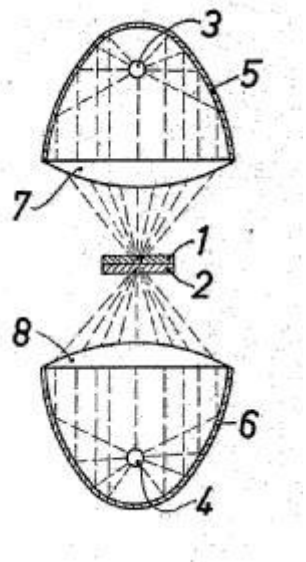

B29C 65/1448

{radiating the edges of the parts to be joined, e.g. for curing a layer of adhesive placed between two flat parts to be joined, e.g. for making CDs or DVDs}

Definition statement

This place covers:

Example 1, from

JP11053778:

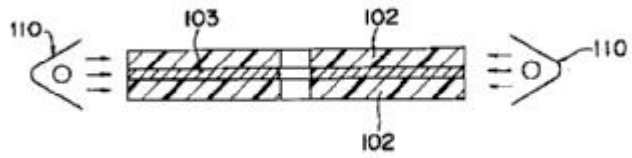

B29C 65/1451

{radiating the edges of holes or perforations}

Definition statement

This place covers:

Example 1, from

JP63275052:

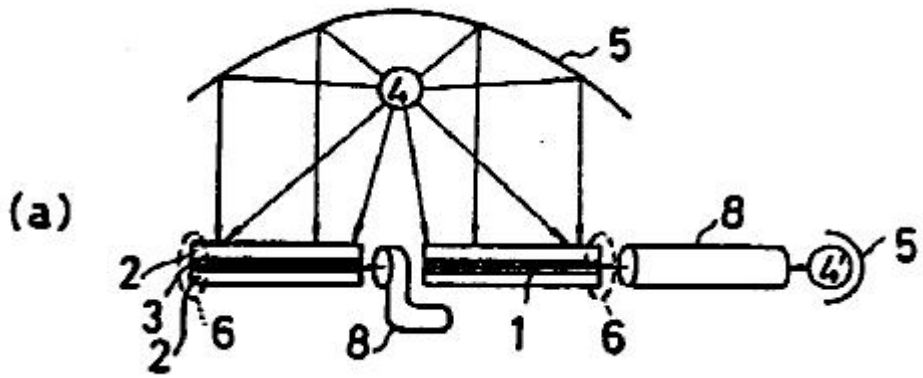

Example 2, from

JP11053778:

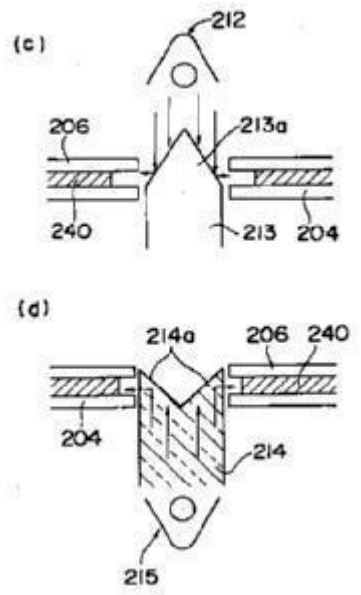

B29C 65/1464

{making use of several radiators}

Definition statement

This place covers:

Example 1, from

EP0415068

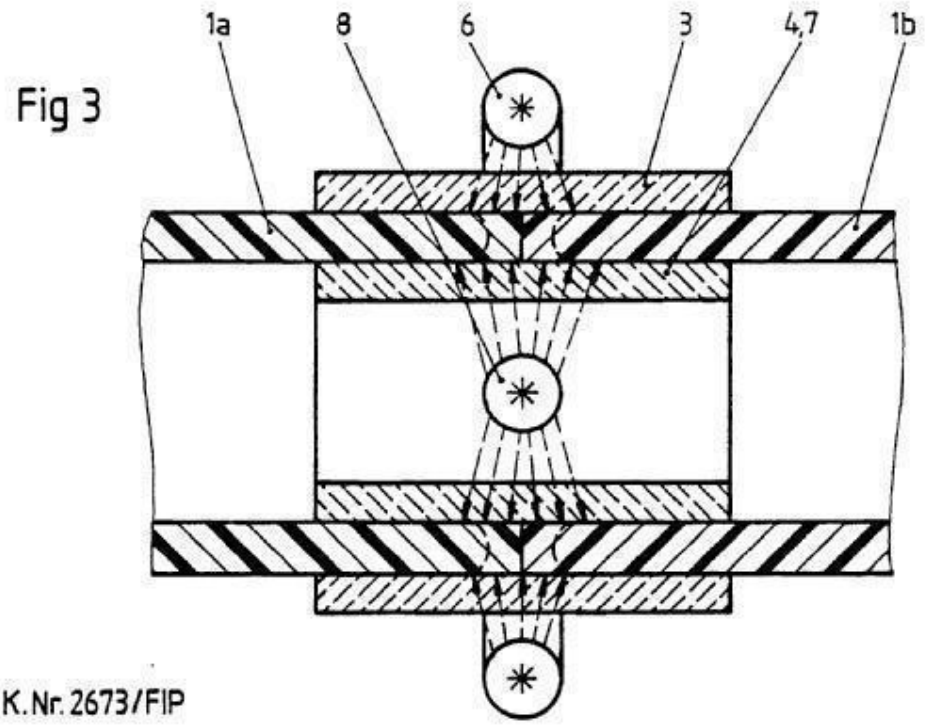

Example 2, from

EP0510804:

FIG. 1.

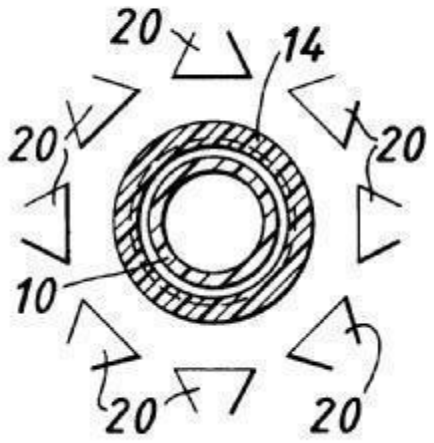

Example 3, from

EP1059344:

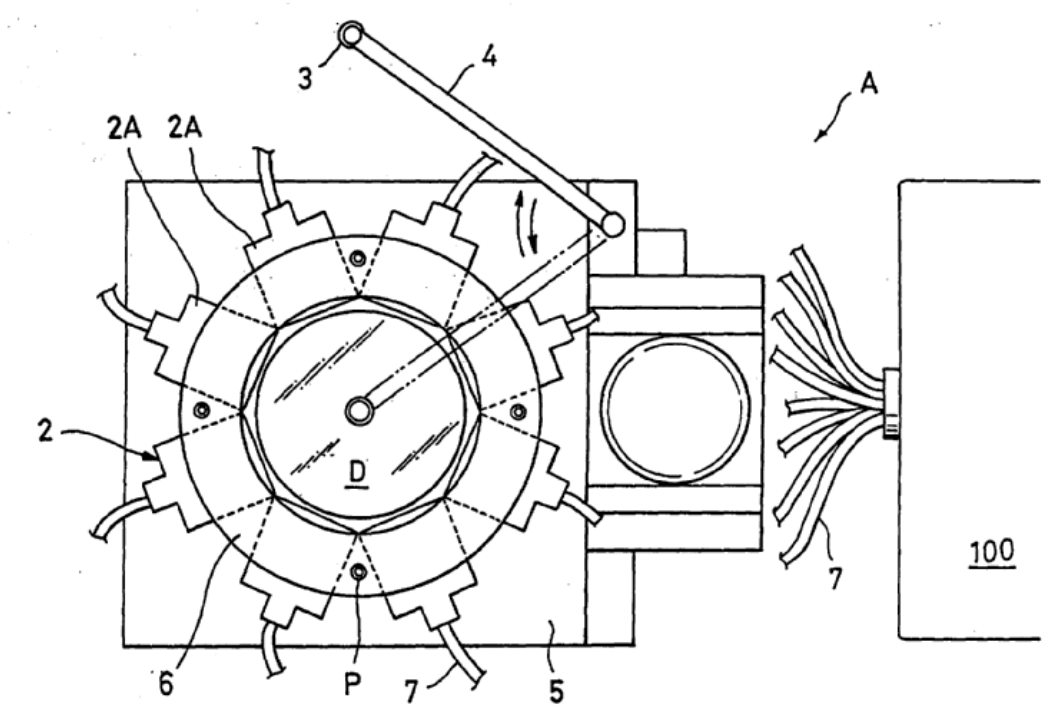

B29C 65/148

{placed at the interface}

Definition statement

This place covers:

Example 1, from

US5843265:

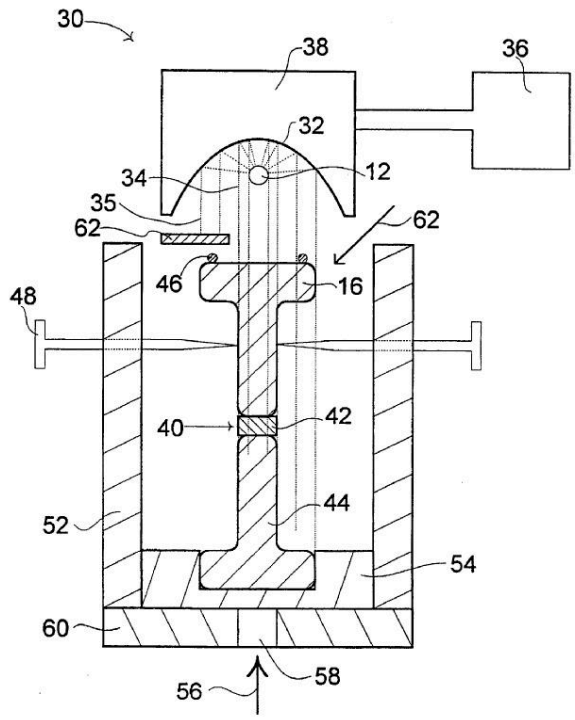

B29C 65/1483

{coated on the article}

Definition statement

This place covers:

Example 1, from

SU1502396:

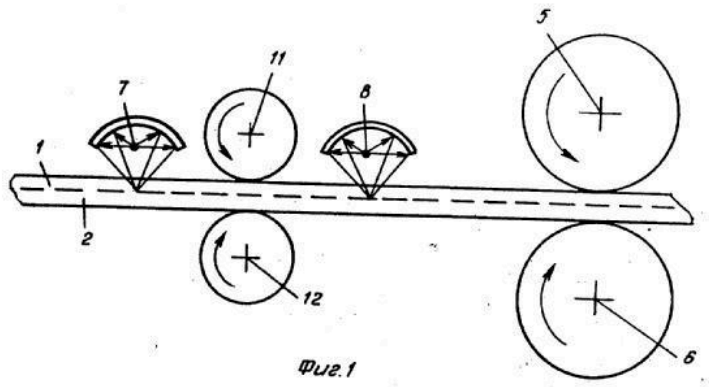

Фиг.1

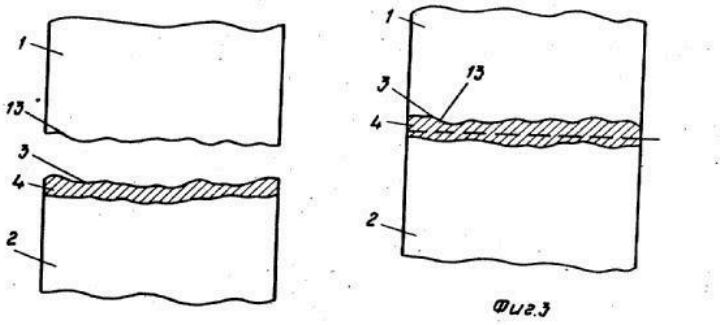

Фиг.3

B29C 65/1487

{making use of light guides (B29C 65/1687 takes precedence)}

Definition statement

This place covers:

Example 1, from

JP3238185:

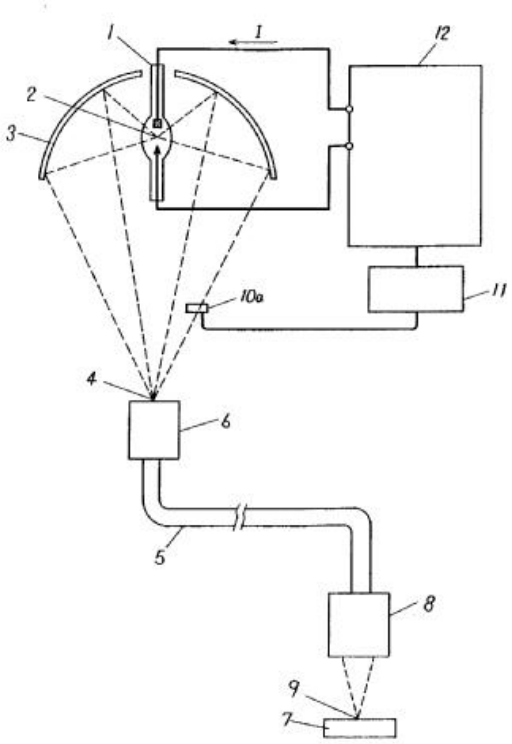

B29C 65/1496

{making use of masks (B29C 65/1696 takes precedence)}

Definition statement

This place covers:

Example 1, from

US5968305:

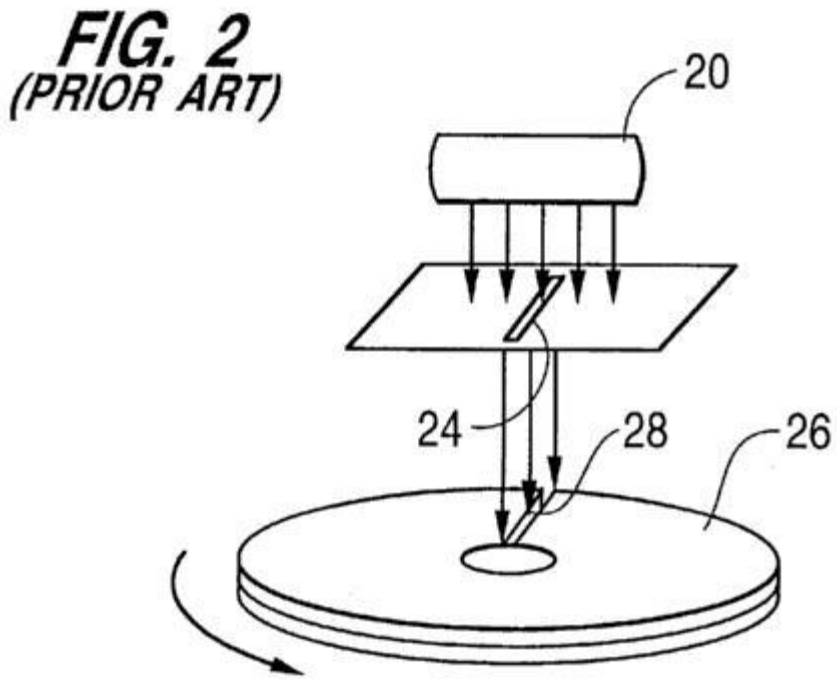

References

Informative references

Attention is drawn to the following places, which may be of interest for search:

Heating or curing by wave energy or particle radiation using transparent moulds provided with masks or diaphragms	B29C 35/0894

B29C 65/16

Laser beams

References

Informative references

Attention is drawn to the following places, which may be of interest for search:

Soldering by means of lasers	B23K 1/0056
Bonding, e.g. welding, of materials in general, e.g. metals, by laser beam	B23K 26/20
Lasers	H01S 3/00

B29C 65/1632

{direct heating the surfaces to be joined}

Definition statement

This place covers:

Example 1, from

JP4249134:

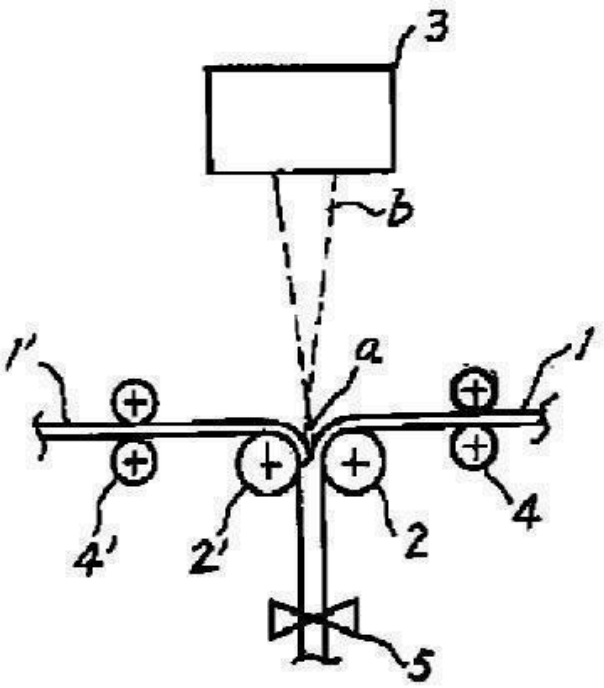

Example 2, from

JP50138066:

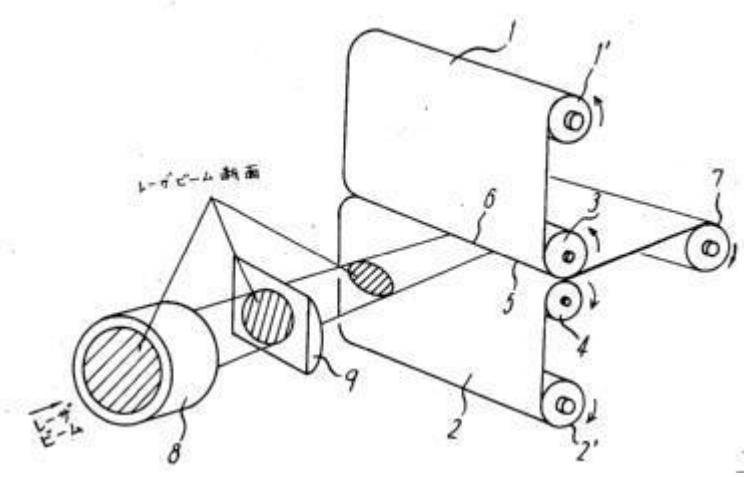

B29C 65/1635

{at least passing through one of the parts to be joined, i.e. laser transmission welding}

Definition statement

This place covers:

Example 1, from

DE19814298:

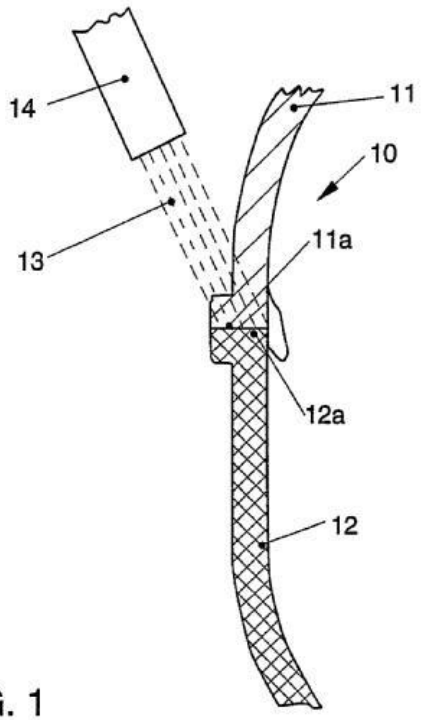

FIG. 1

B29C 65/1638

{focusing the laser beam on the interface}

Definition statement

This place covers:

Example 1, from

DE1479686:

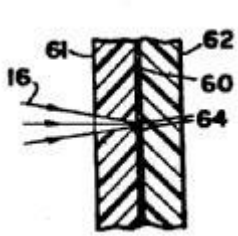

B29C 65/1641

{making use of a reflector on the opposite side, e.g. a polished mandrel or a mirror (pressing means reflective to electromagnetic radiation B29C 66/81268)}

Definition statement

This place covers:

Example 1, from

FR1576435:

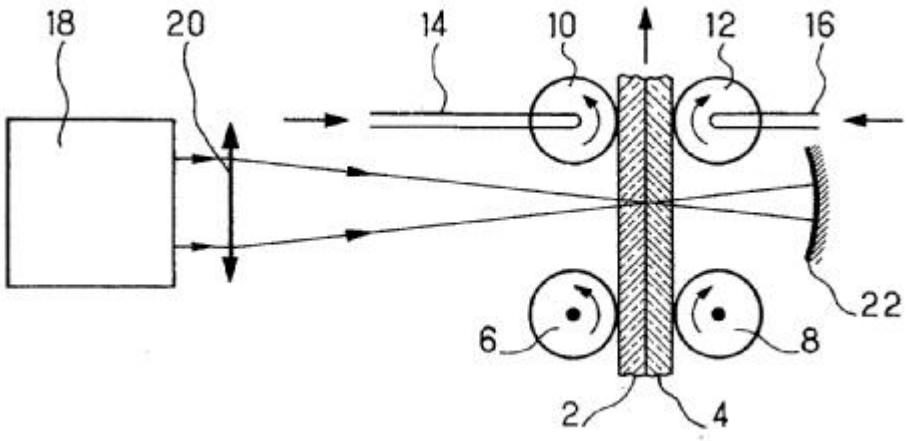

B29C 65/1645

{heating both sides of the joint, e.g. by using two lasers or a split beam}

Definition statement

This place covers:

Example 1, from

DE2725463:

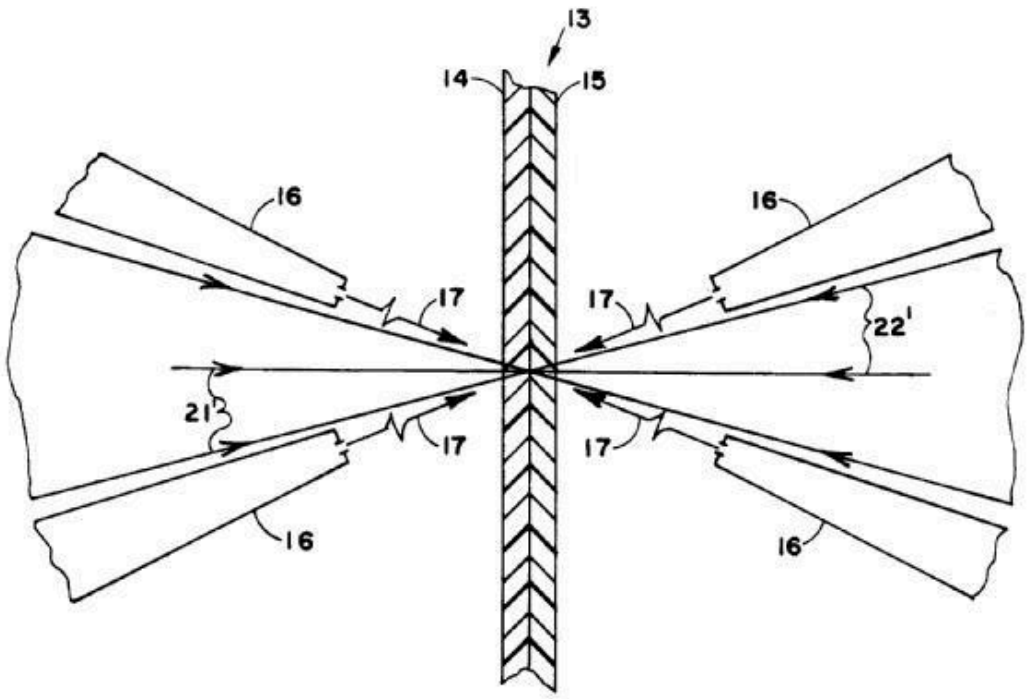

B29C 65/1661

{scanning repeatedly, e.g. quasi-simultaneous laser welding}

Definition statement

This place covers:

Example 1, from

XP000535361:

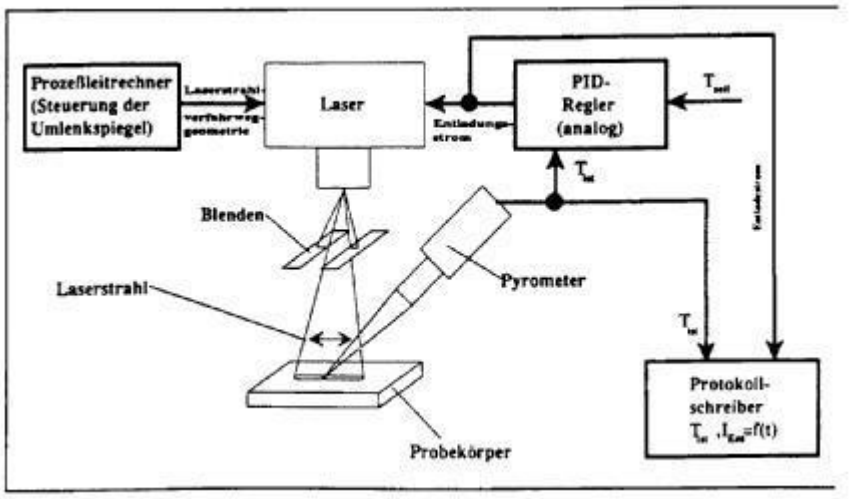

B29C 65/1664

{making use of several radiators}

Definition statement

This place covers:

Example 1, from

DE10338732:

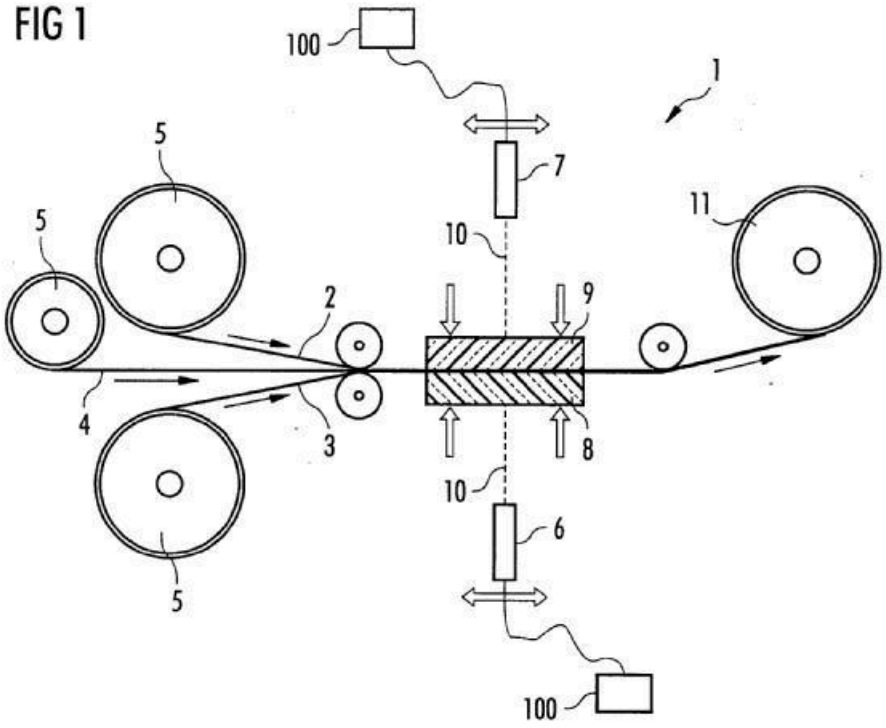

Example 2, from

JP2004333946:

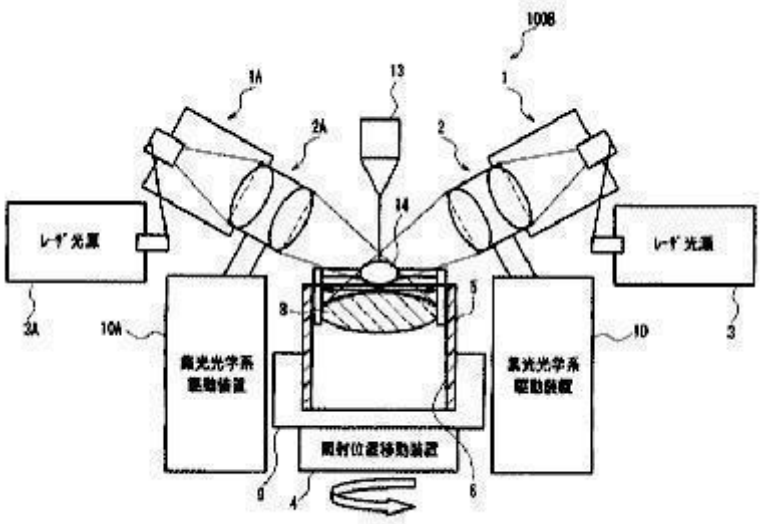

B29C 65/1677

{making use of an absorber or impact modifier}

Definition statement

This place covers:

Example 1, from

WO2005021244:

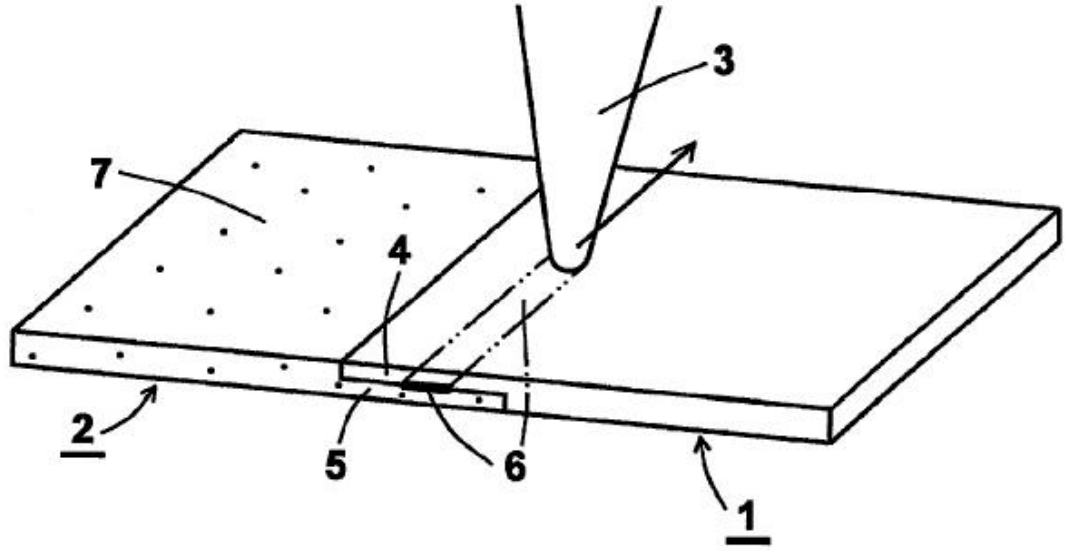

B29C 65/168

{placed at the interface}

Definition statement

This place covers:

Example 1, from

WO2005021244:

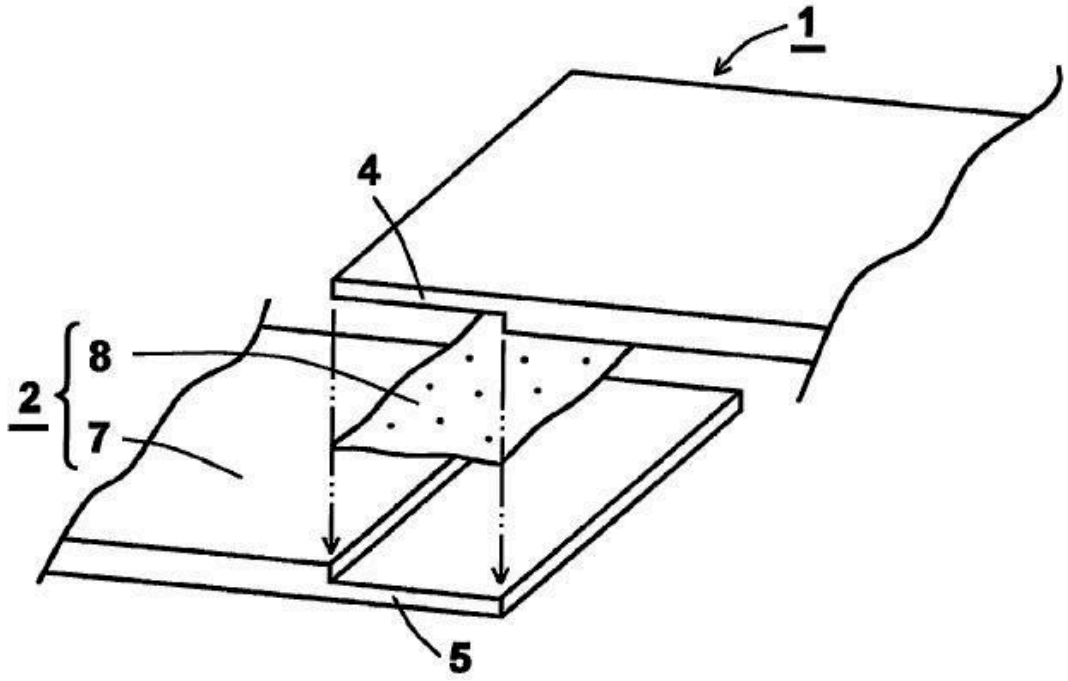

Example 2, from

JP2007111961:

【図1】

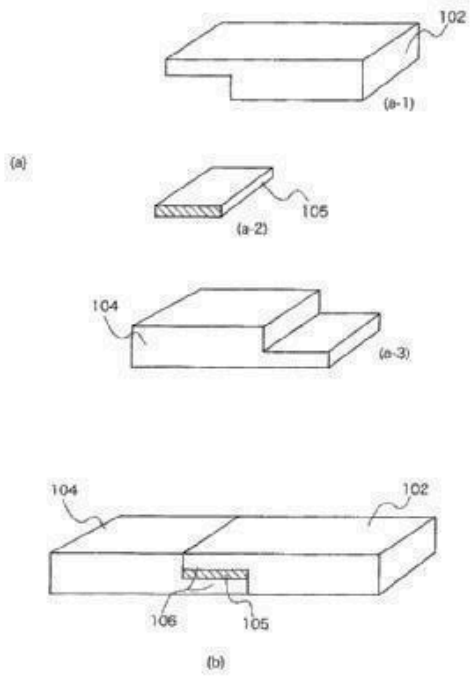

【図2】

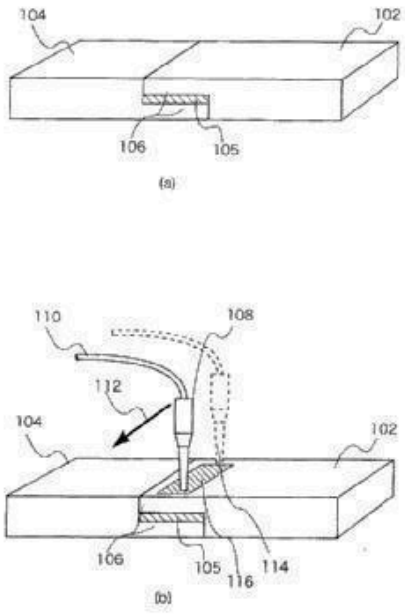

B29C 65/1683

{coated on the article}

Definition statement

This place covers:

Example 1, from

WO2005021244:

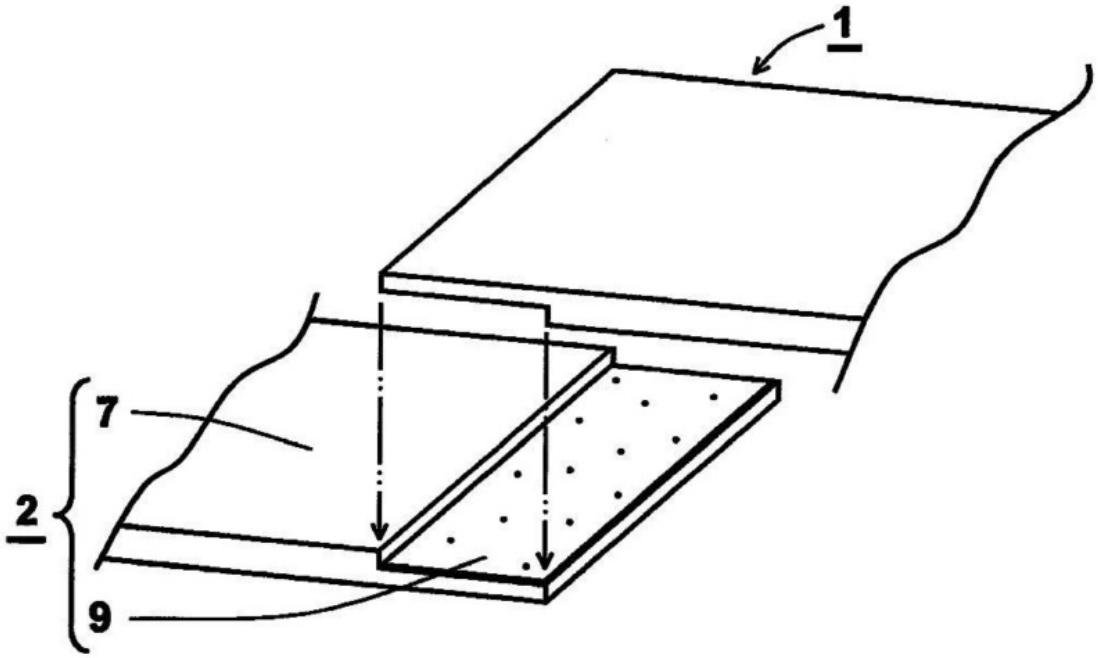

B29C 65/1687

{making use of light guides}

Definition statement

This place covers:

Example 1, from

EP1393848:

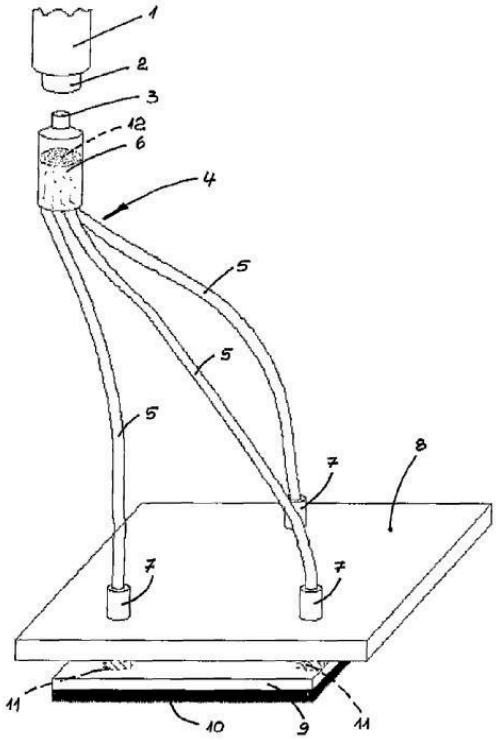

B29C 65/169

{being a part of the joined article}

Definition statement

This place covers:

Example 1, from

US5276303:

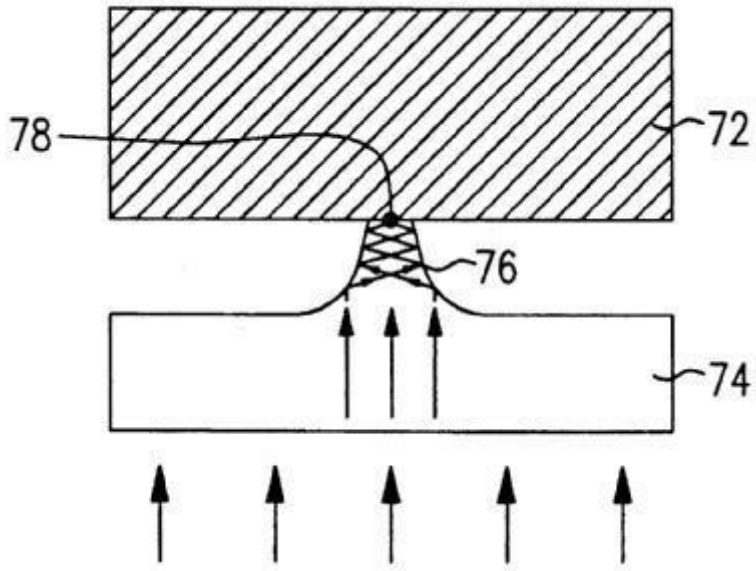

Example 2, from

US6592239:

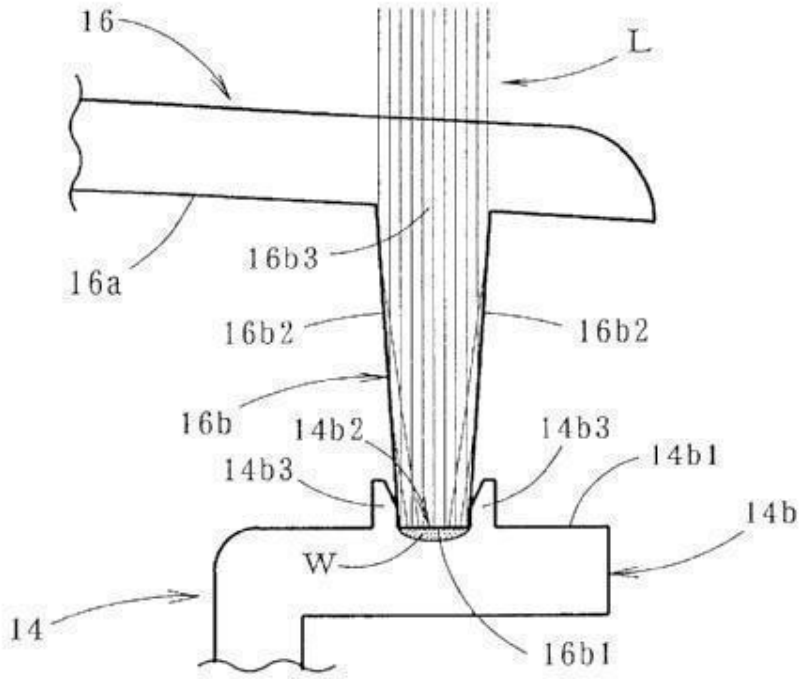

B29C 65/1693

{in the form of a cavity}

Definition statement

This place covers:

Example 1, from

US5276303:

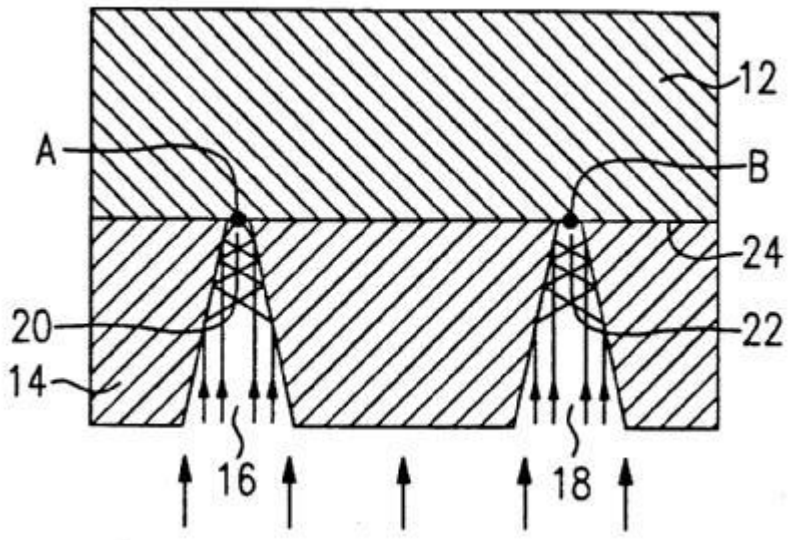

B29C 65/1696

{making use of masks}

Definition statement

This place covers:

Example 1, from

US2006278617:

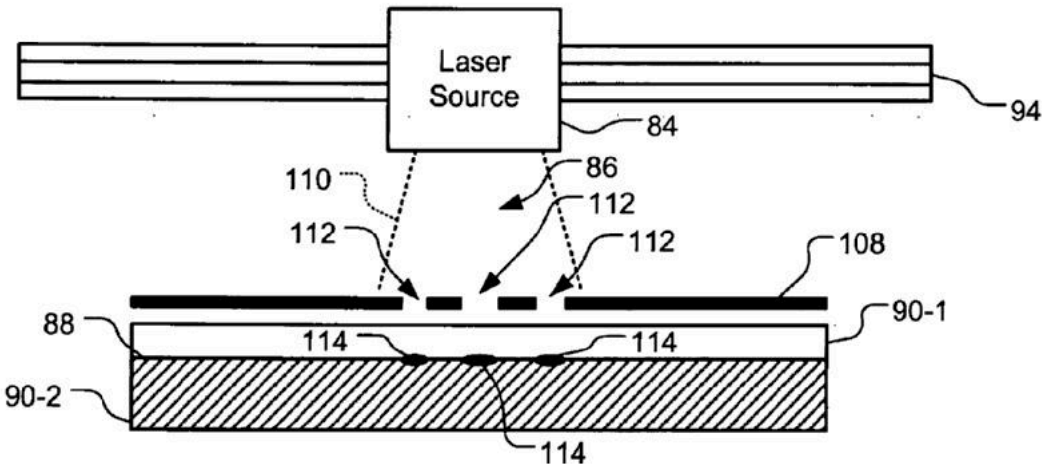

Example 2, from

EP1864784:

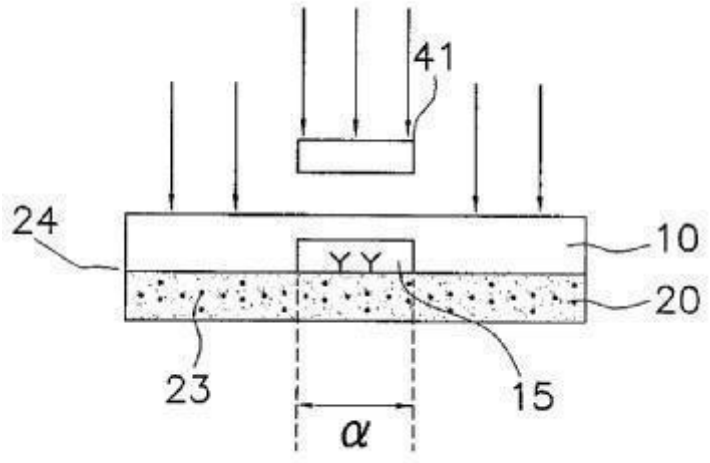

References

Informative references

Attention is drawn to the following places, which may be of interest for search:

Heating or curing by wave energy or particle radiation using transparent moulds provided with masks or diaphragms	B29C 35/0894

B29C 65/20

with direct contact, e.g. using "mirror"

Definition statement

This place covers:

Example 1, from

JP2003080601:

【図4】

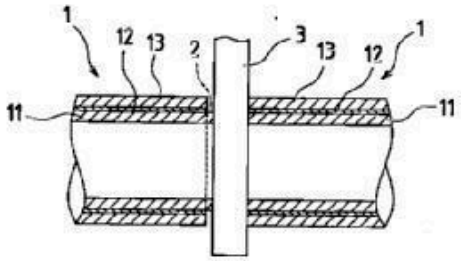

【図5】

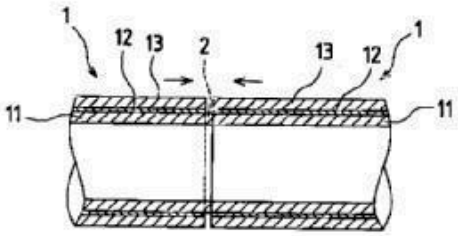

【図6】

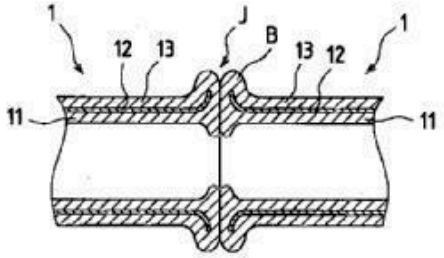

Example 2, from

JP11325374:

【図８】

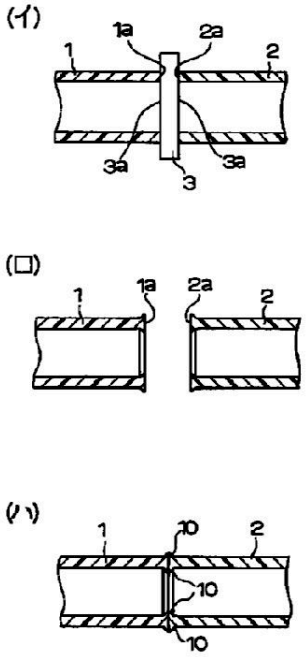

B29C 65/2015

{being a single welding mirror comprising several separate heating surfaces in different planes, e.g. said heating surfaces having different temperatures}

Definition statement

This place covers:

Example 1, from

JP52168967U:

第1a図

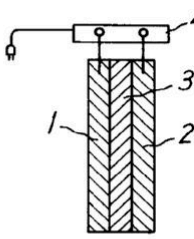

第1b図

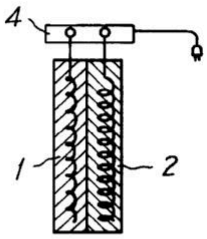

第2図

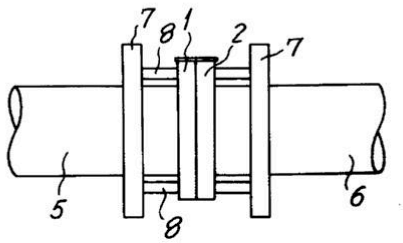

B29C 65/2023

{said welding mirror comprising several sectors}

Definition statement

This place covers:

Example 1, from

WO8803245:

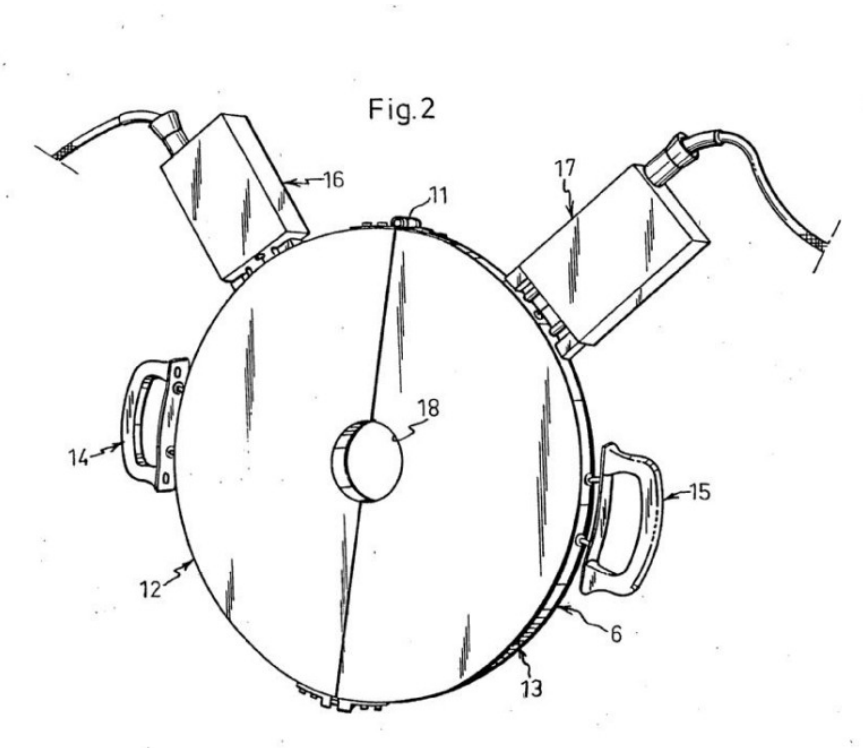

Example 2, from

EP0667285:

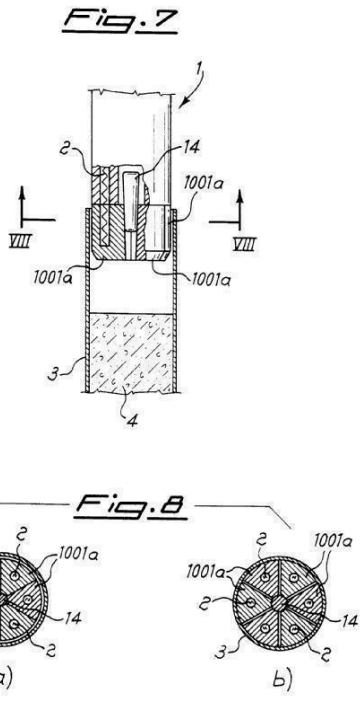

Example 3, from

JP4044831:

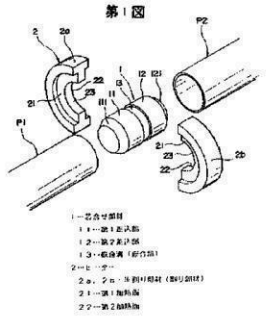

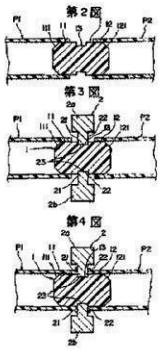

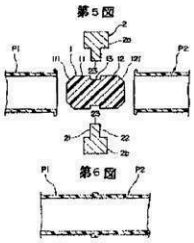

B29C 65/2038

{being a wire}

Definition statement

This place covers:

Example 1, from

US2546164:

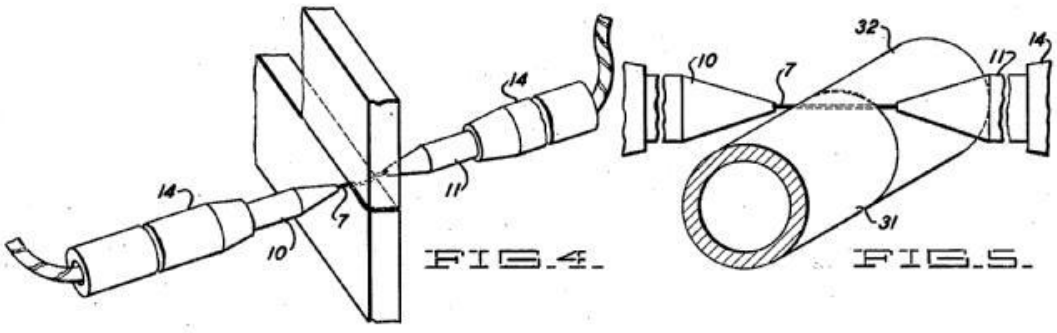

B29C 65/2046

{using a welding mirror which also cuts the parts to be joined, e.g. for sterile welding}

Definition statement

This place covers:

Example 1, from

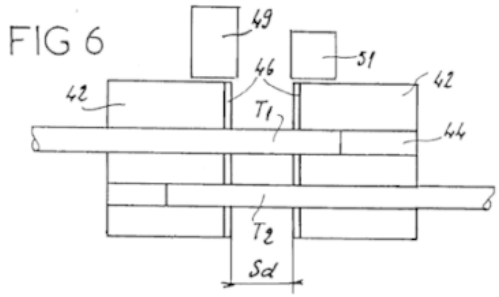

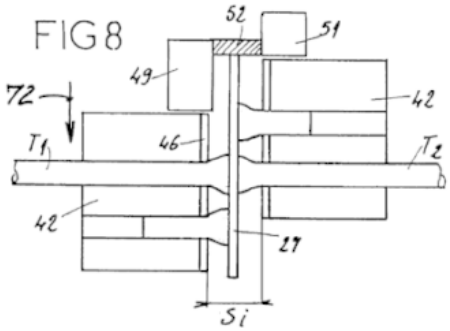

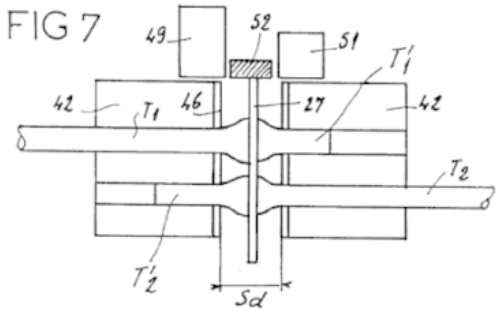

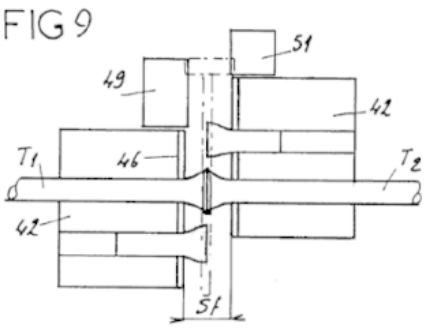

References

Informative references

Attention is drawn to the following places, which may be of interest for search:

Methods or apparatus for connecting medical tubes under sterile conditions, i.e. sterile docking	A61M 39/18

B29C 65/2061

{by sliding}

Definition statement

This place covers:

Example 1, from

JP1285328:

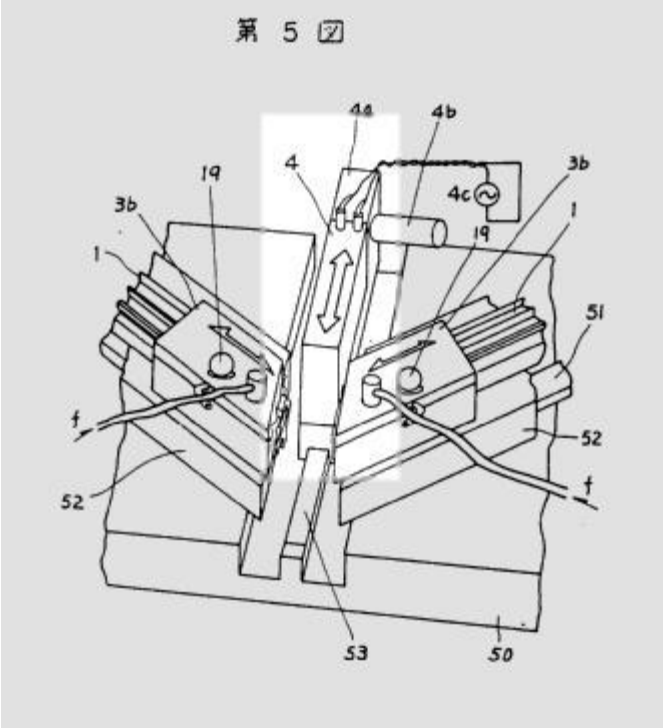

B29C 65/2069

{with an angle with respect to the plane comprising the parts to be joined}

Definition statement

This place covers:

Example 1, from

EP1889708:

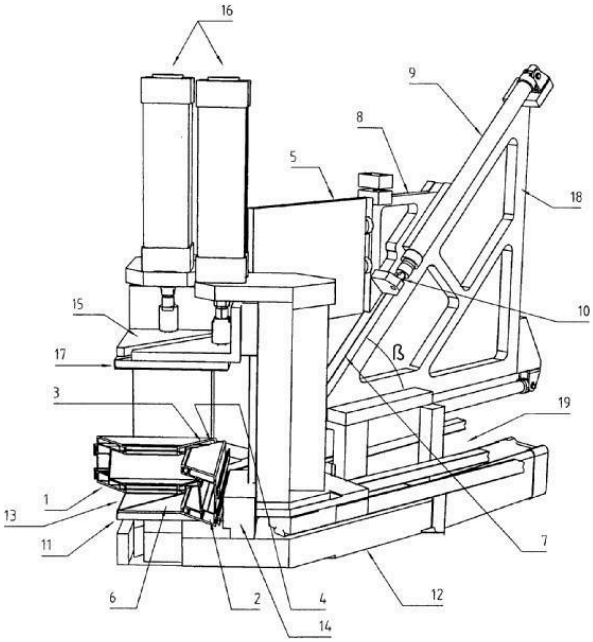

Fig. 1

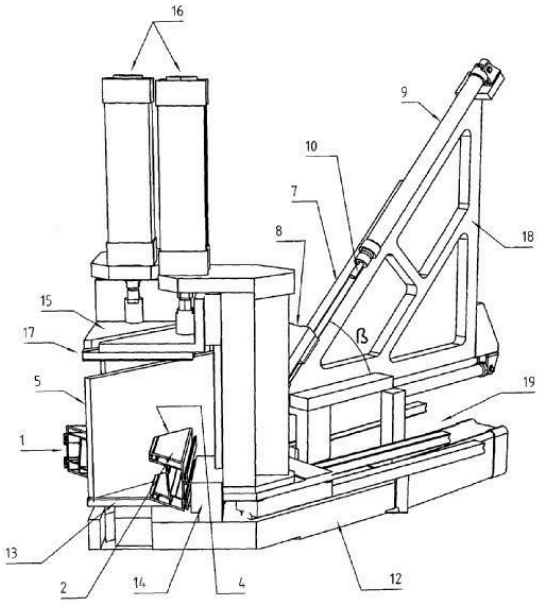

Fig. 2

B29C 65/2076

{perpendicularly to the plane comprising the parts to be joined}

Definition statement

This place covers:

Example 1, from

DE3739656:

Fig.1

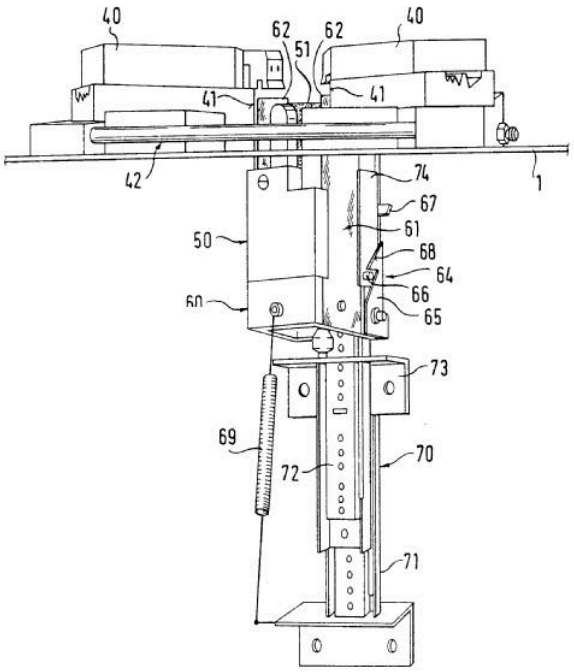

Fig. 3

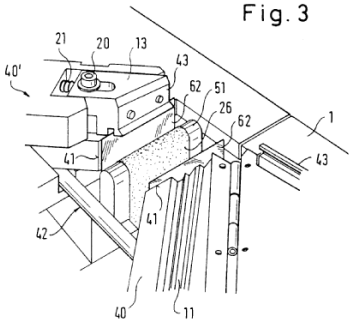

Fig.4

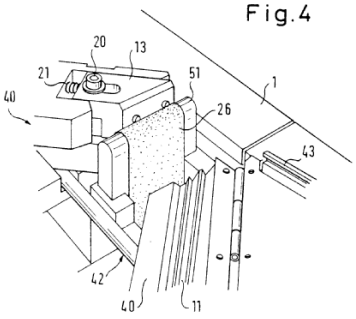

B29C 65/2084

{by pivoting}

Definition statement

This place covers:

Example 1, from

DE2300626:

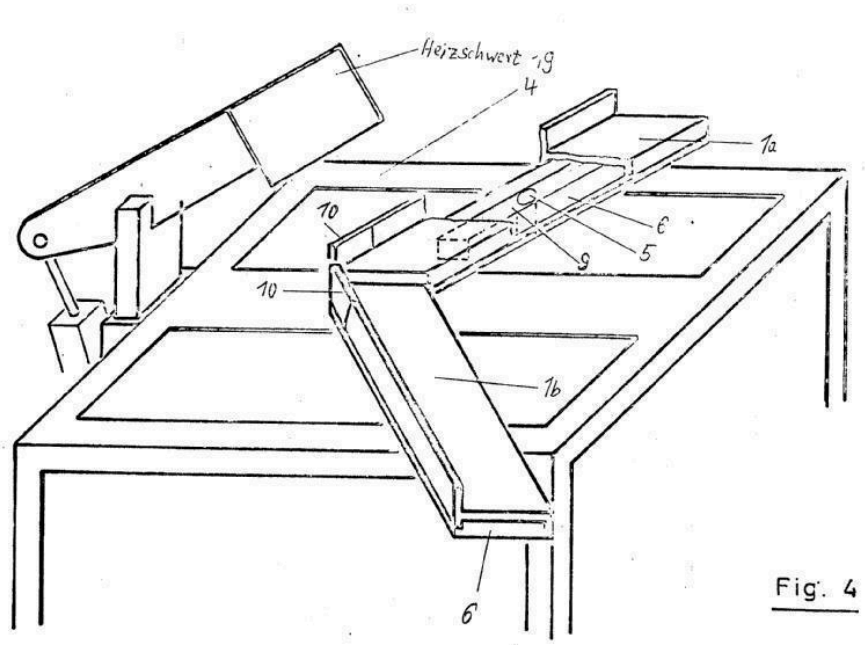

Example 2, from

EP0453903:

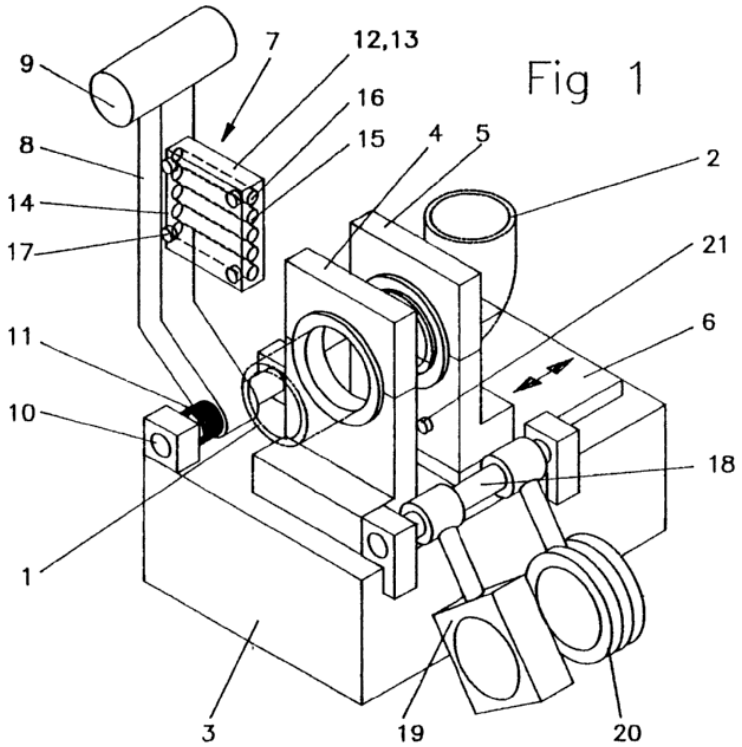

B29C 65/2092

{and involving the use of a facer}

Definition statement

This place covers:

Example 1, from

US5893961:

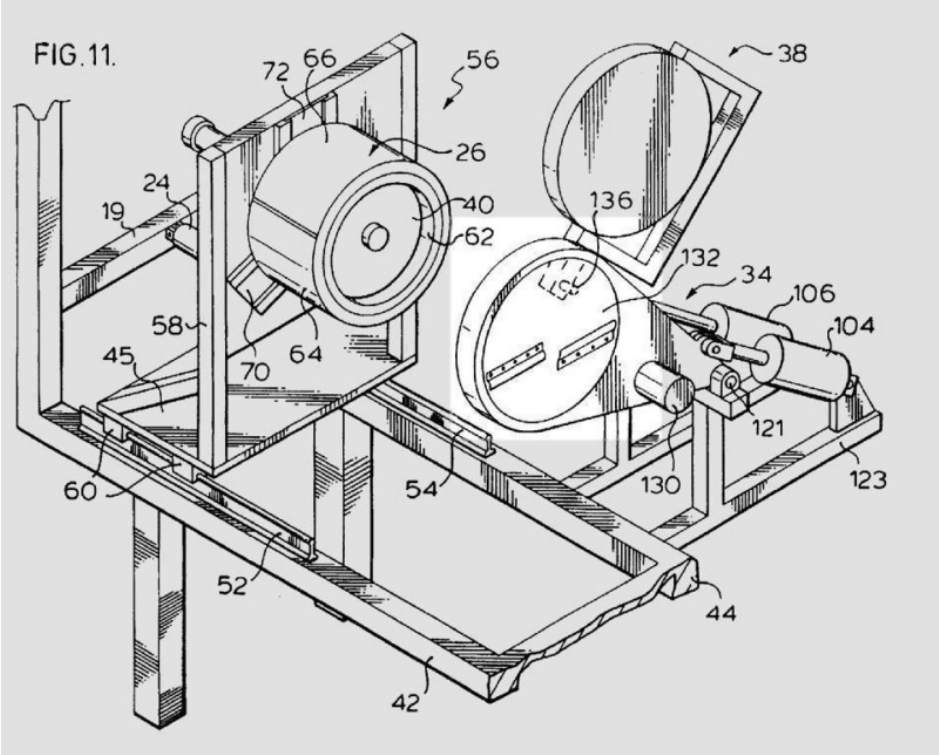

Example 2, from

US6550514:

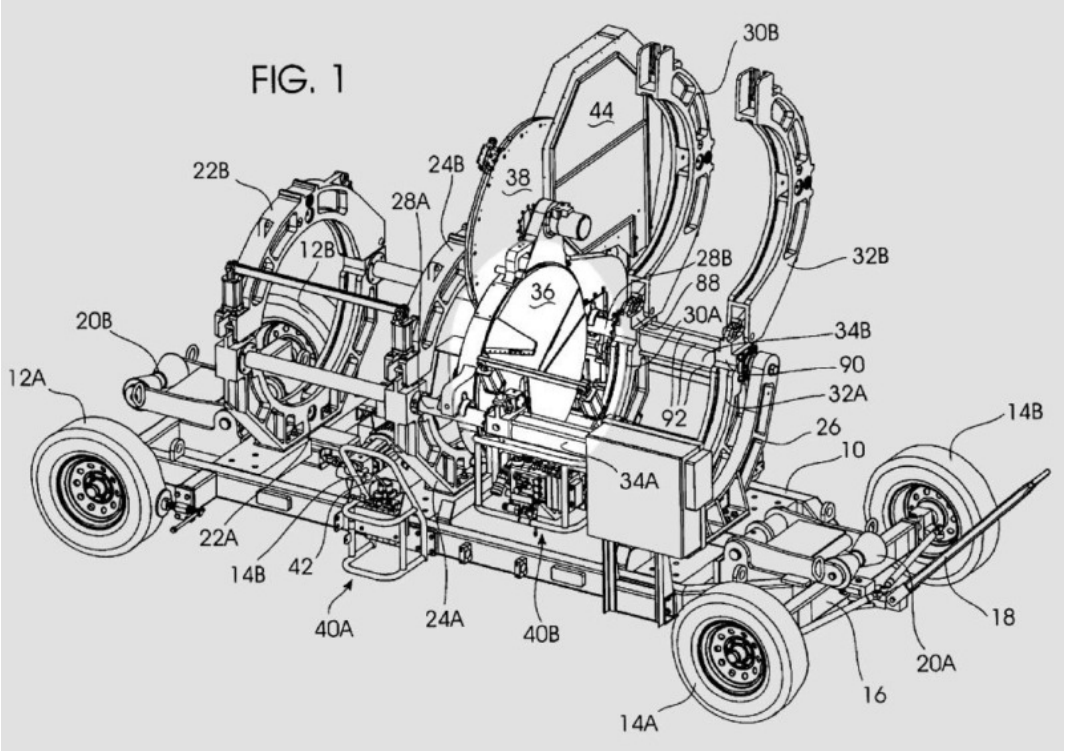

B29C 65/222

{comprising at least a single heated wire}

Definition statement

This place covers:

Example 1, from

FR2840247:

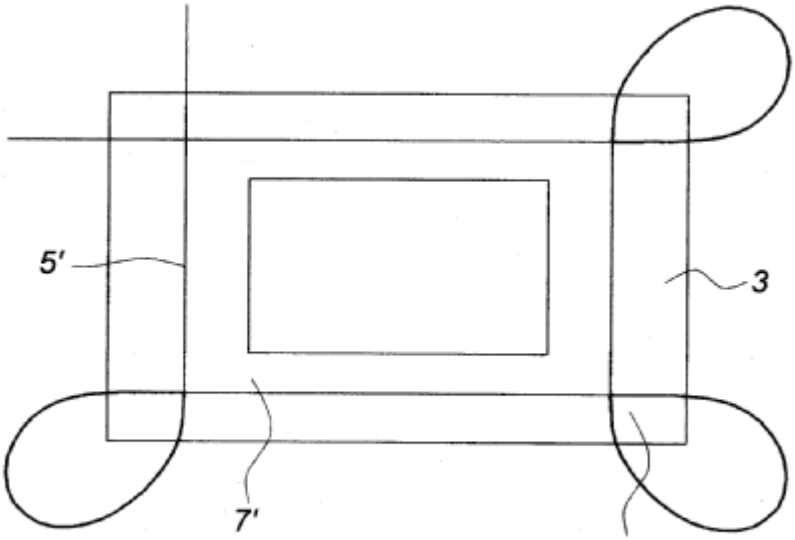

Fig. 3

B29C 65/223

{comprising several heated wires}

Definition statement

This place covers:

Example 1, from

US2009250440:

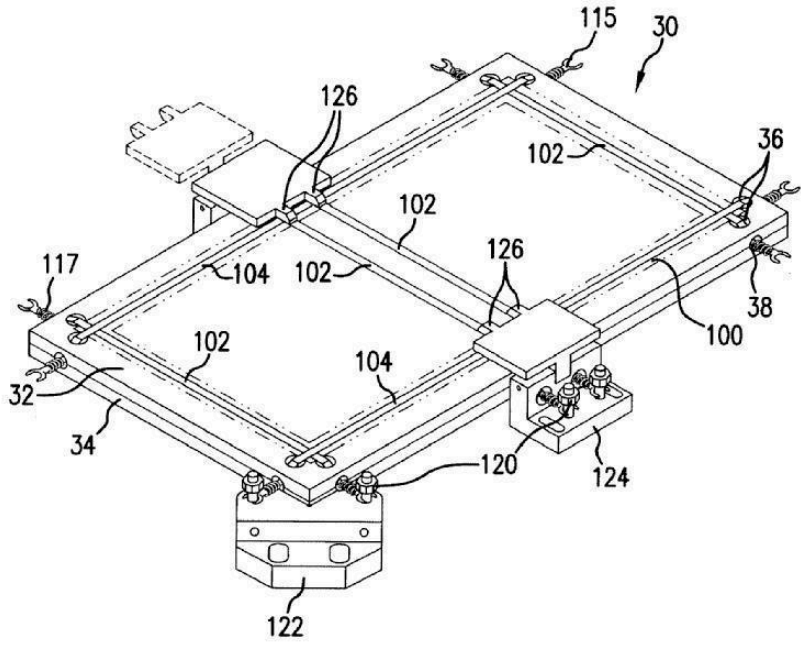

FIG.2

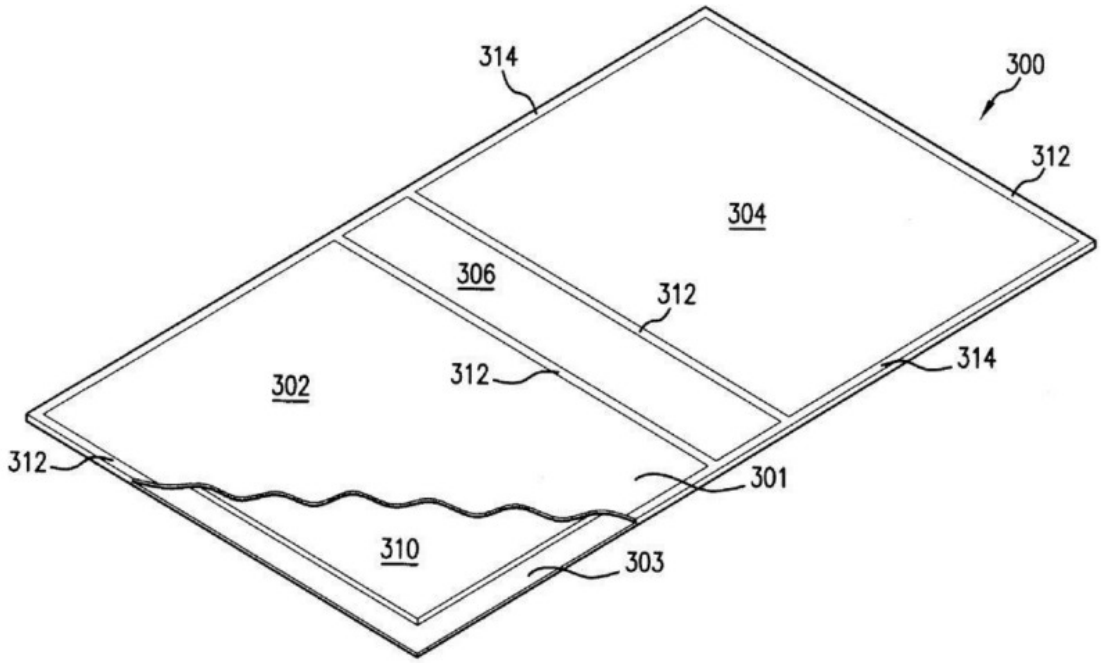

FIG.8

Example 2, from

FR2840247

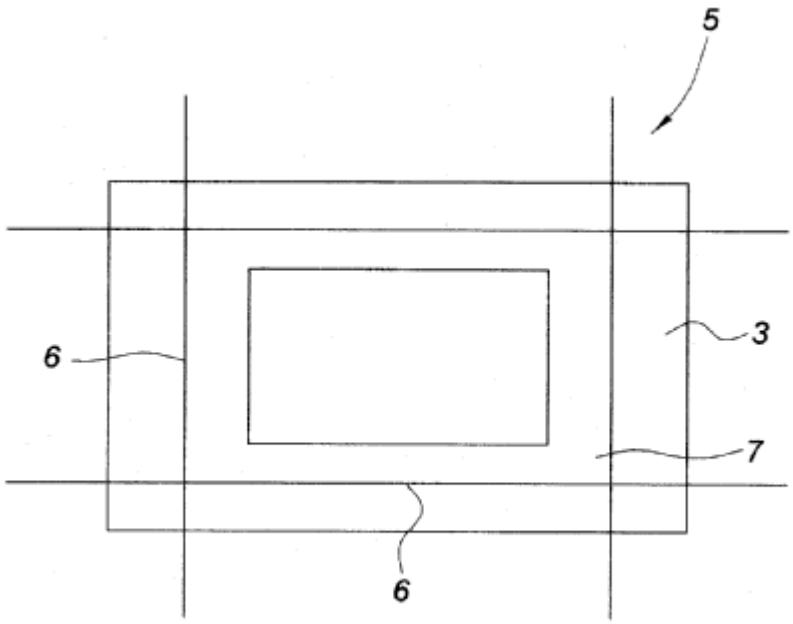

Fig. 2

B29C 65/224

{being a resistive ribbon, a resistive band or a resistive strip}

Definition statement

This place covers:

Example 1, from

US2581977:

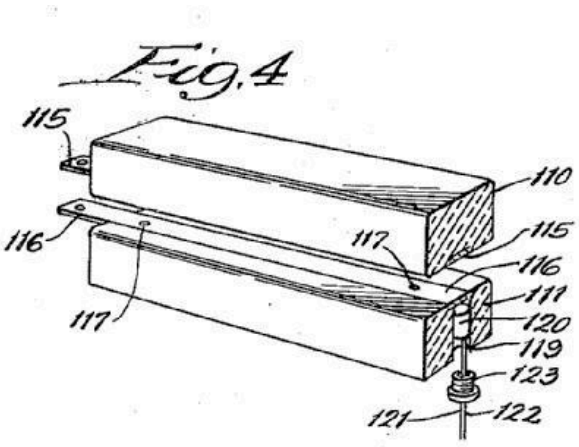

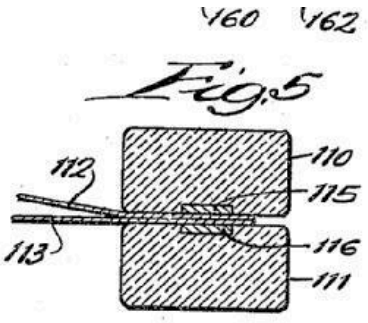

Example 2, from

BE556713:

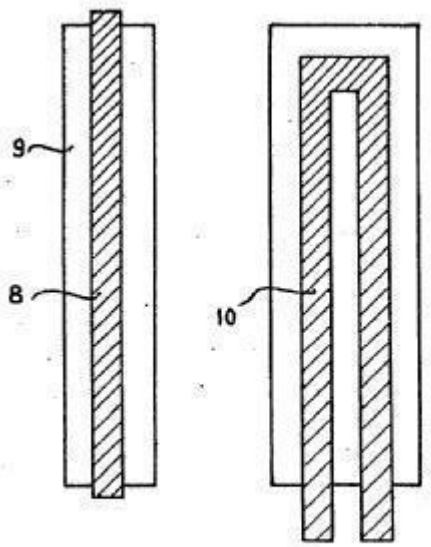

FIG. 3 FIG. 4

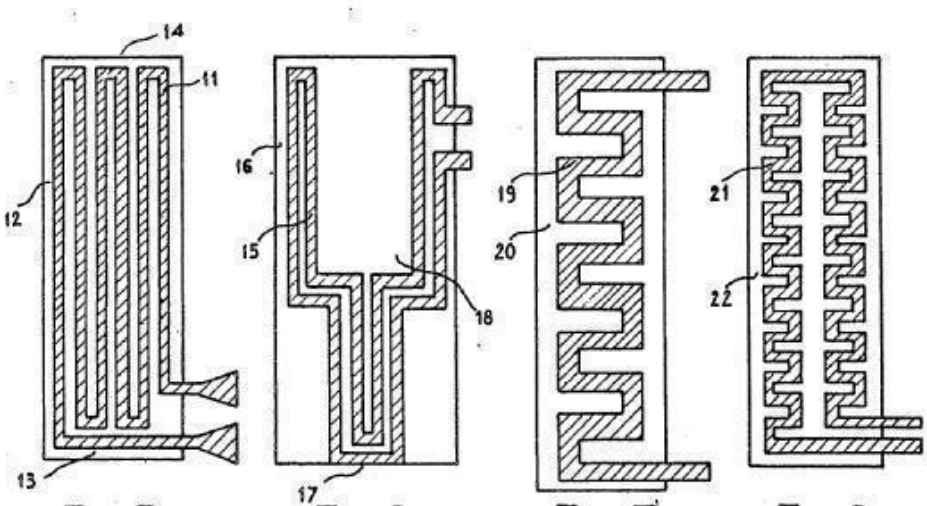

FIG. 5 FIG. 6 FIG. 7 FIG. 8

B29C 65/226

{characterised by the cross-section of said heated wire, resistive ribbon, resistive band or resistive strip, e.g. being triangular}

Definition statement

This place covers:

Example 1, from

DE1936611:

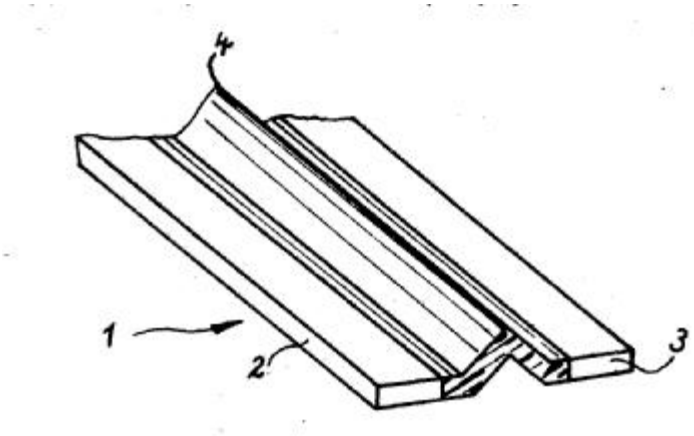

Example 2, from

DE1268360:

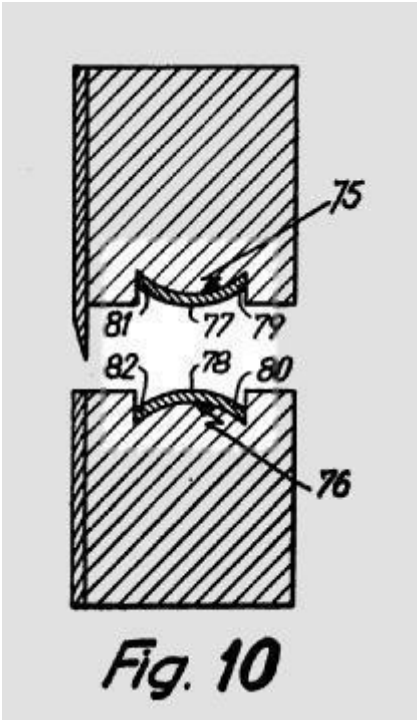

B29C 65/227

{said cross-section being hollow}

Definition statement

This place covers:

Example 1, from

FR2105312:

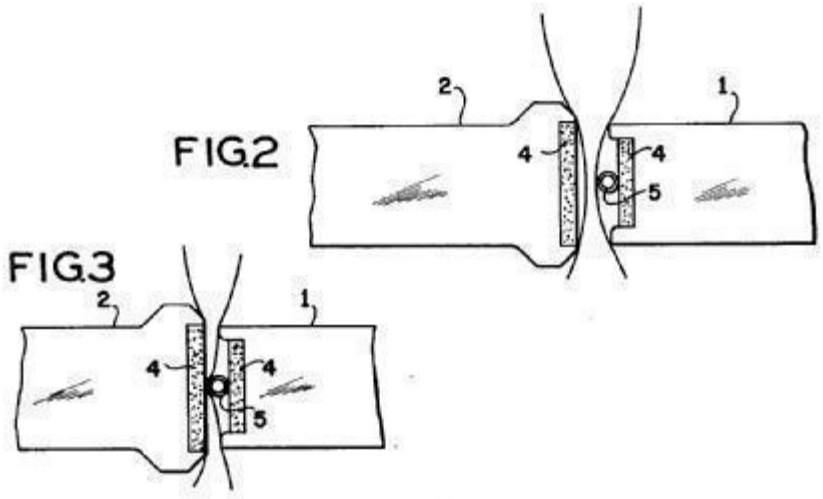

Example 2, from

US2621704:

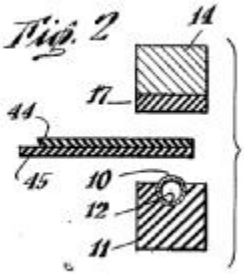

B29C 65/228

{characterised by the means for electrically connecting the ends of said heated wire, resistive ribbon, resistive band or resistive strip}

Definition statement

This place covers:

Example 1, from

WO9323235:

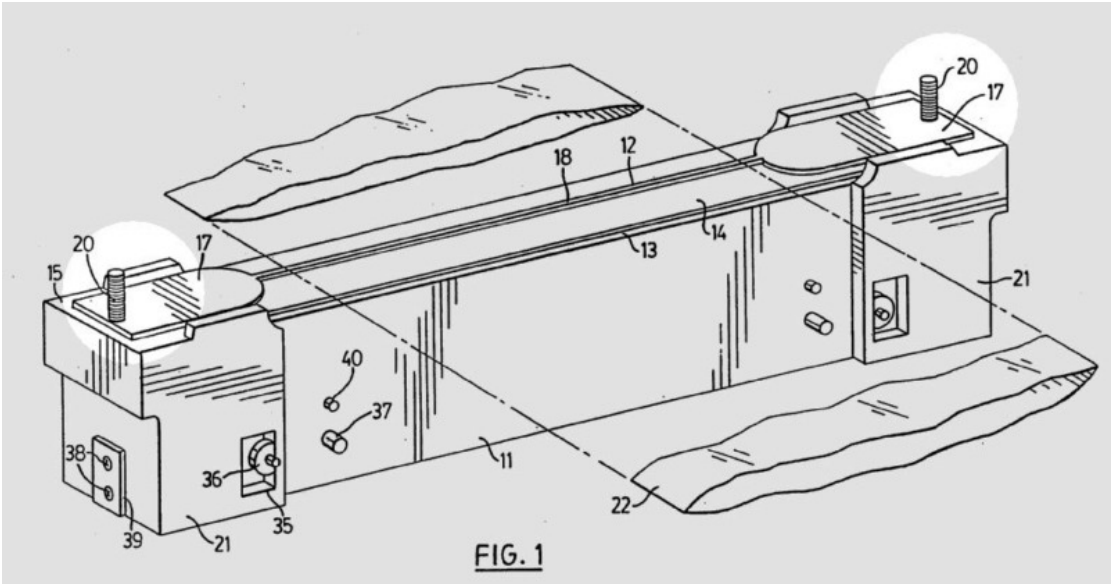

Example 2, from

WO9214601:

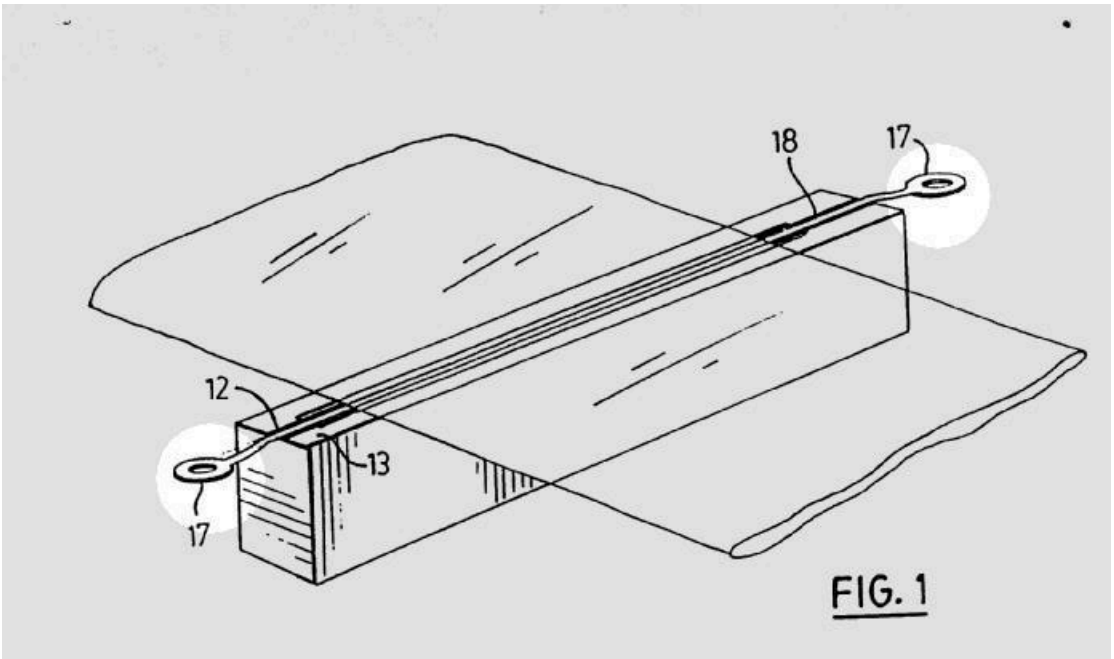

B29C 65/229

{characterised by the means for tensioning said heated wire, resistive ribbon, resistive band or resistive strip (means for compensating for the thermal expansion of welding jaws in general B29C 66/8185)}

Definition statement

This place covers:

Example 1, from

US3005402:

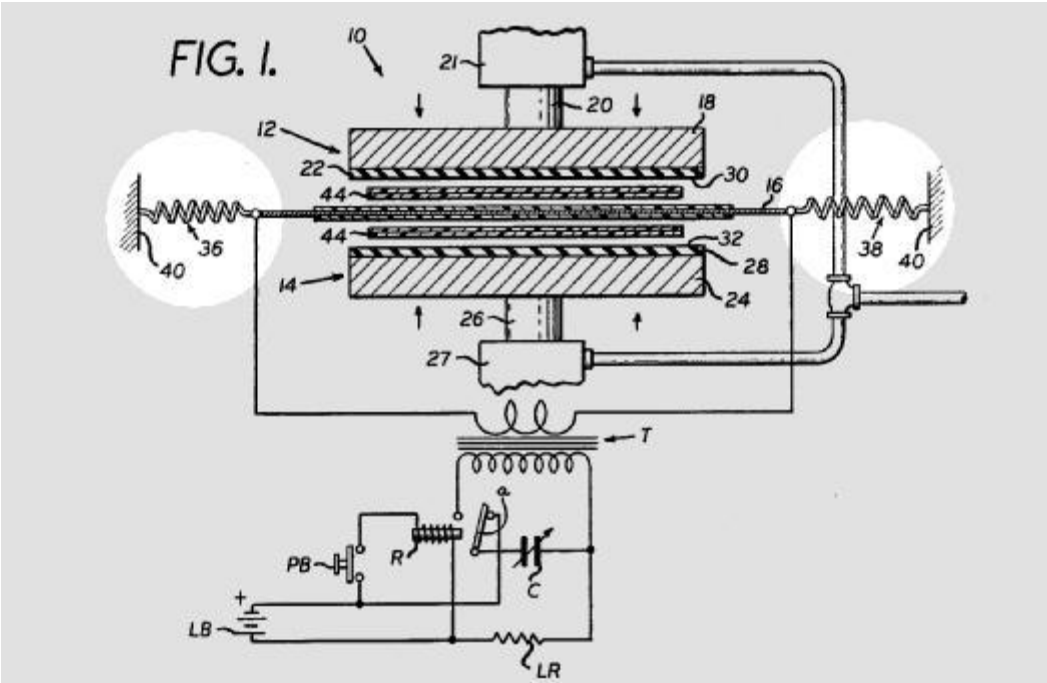

B29C 65/242

{the heat transfer being achieved by contact, i.e. a heated tool being brought into contact with the welding tool and afterwards withdrawn from it}

Definition statement

This place covers:

Example 1, from

EP0538636:

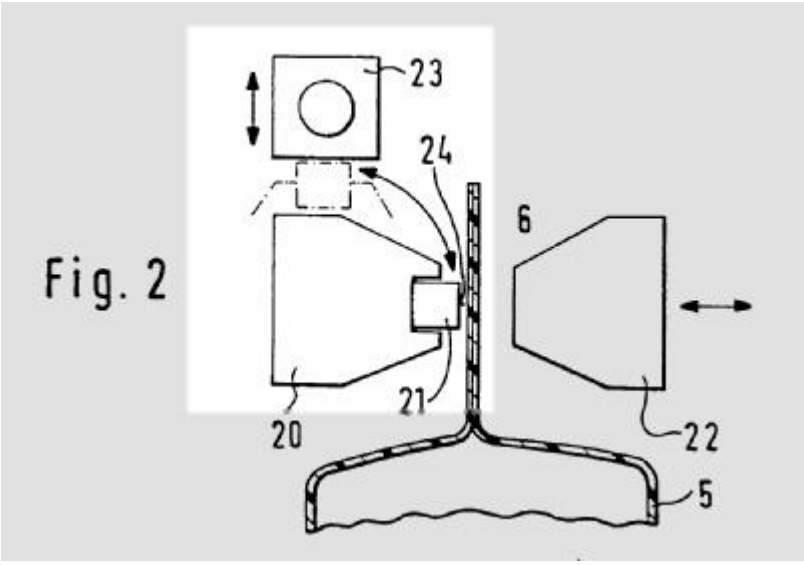

B29C 65/245

{the heat transfer being achieved contactless, e.g. by radiation (B29C 65/32 takes precedence)}

Definition statement

This place covers:

Example 1, from

CH362216:

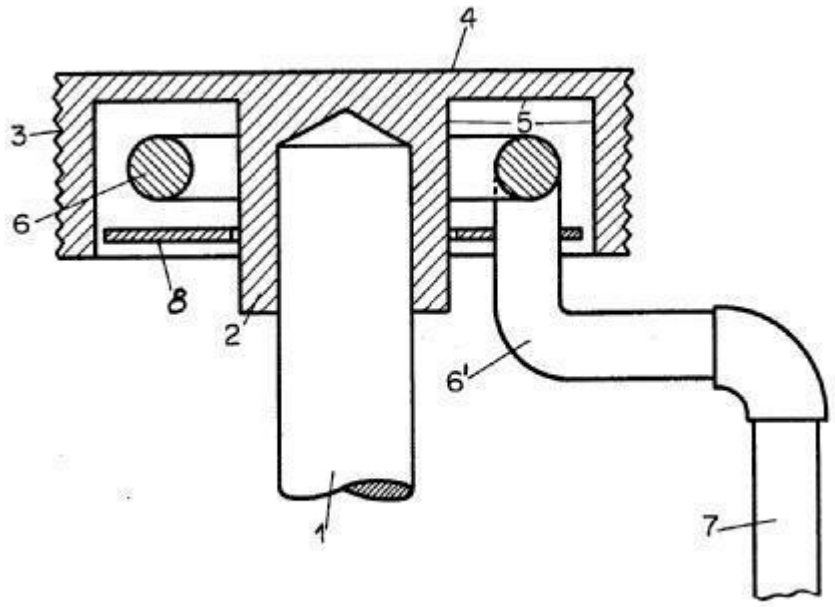

Example 2, from

DE19746402:

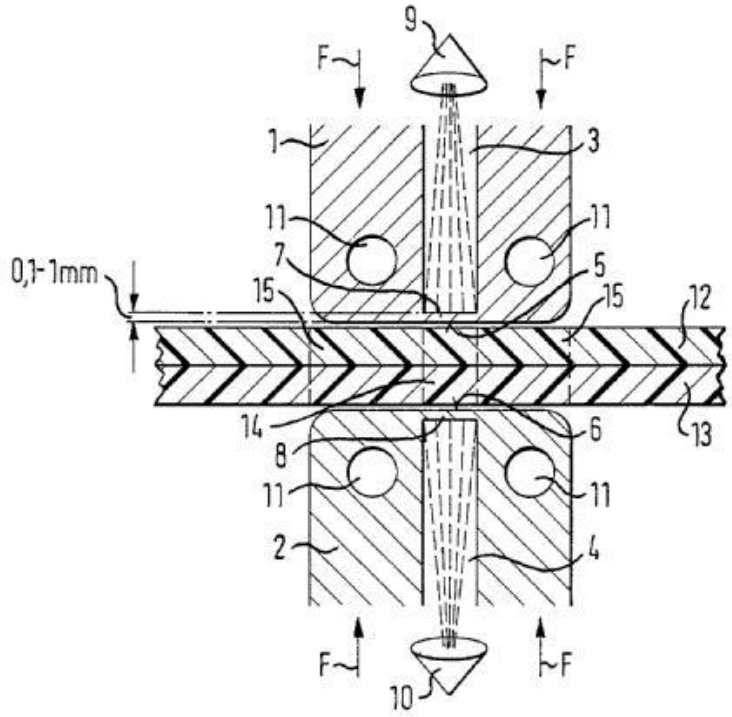

B29C 65/26

Hot fluid

Definition statement

This place covers:

Example 1, from

FR1151122:

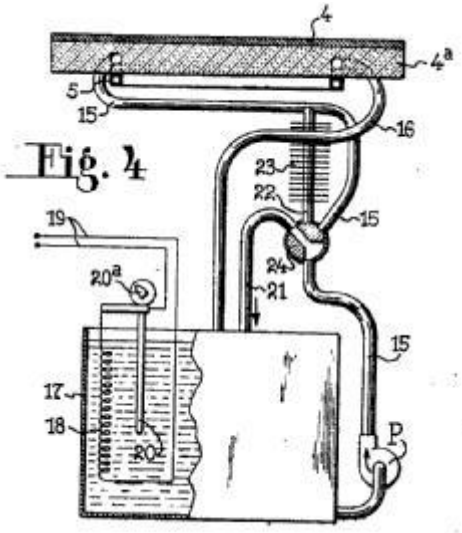

B29C 65/28

Flame or combustible material

Definition statement

This place covers:

Example 1, from

CH334038:

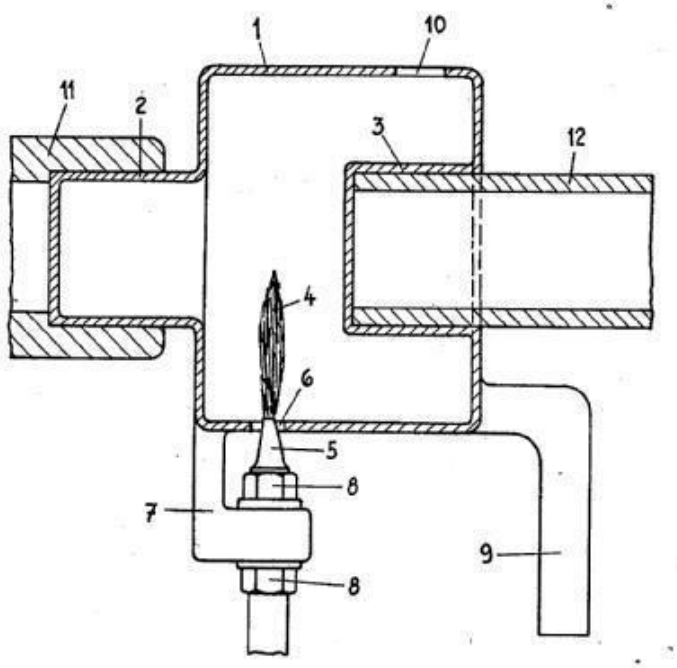

Example 2, from

DE2241657:

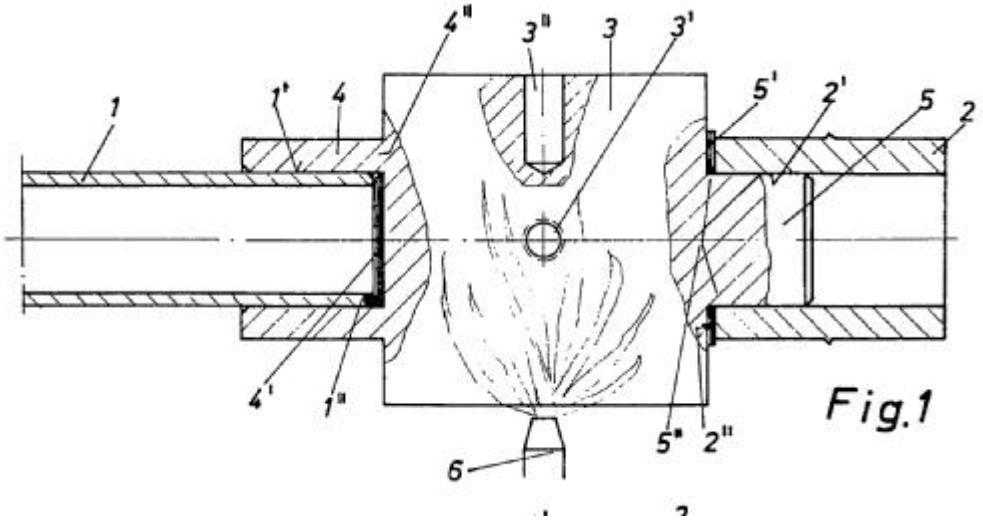

B29C 65/30

Electrical means {(B29C 65/38 takes precedence)}

Definition statement

This place covers:

Example 1, from

FR1422754:

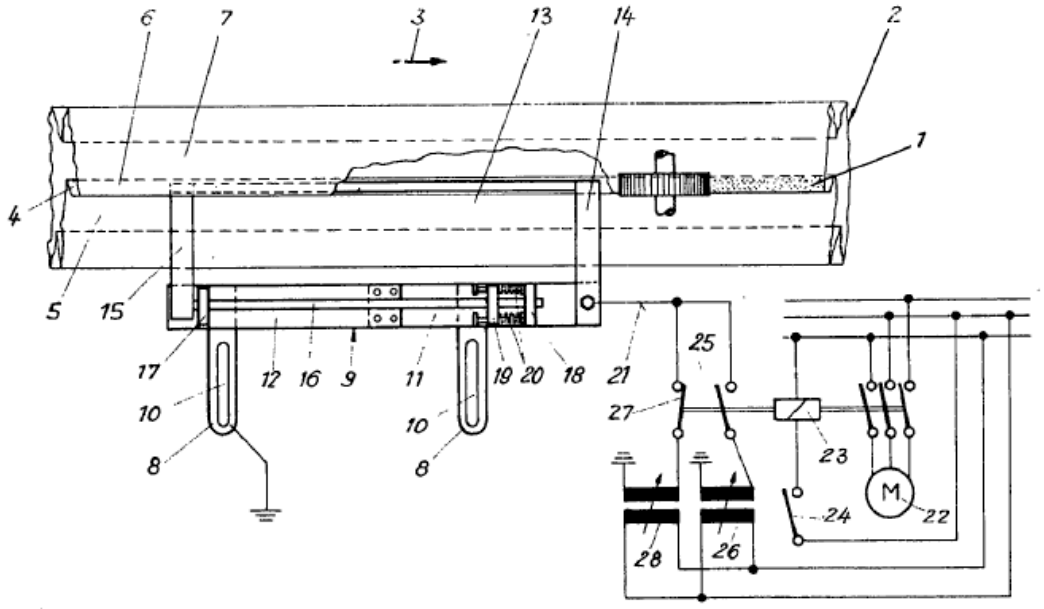

B29C 65/305

{involving the use of cartridge heaters}

Definition statement

This place covers:

Example 1, from

US4451325:

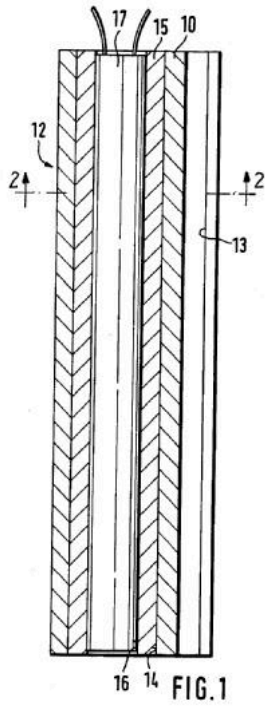

FIG.1

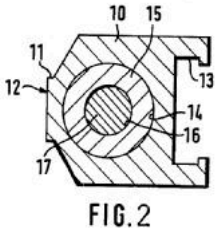

FIG.2

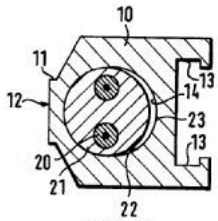

FIG.3

B29C 65/32

Induction

Definition statement

This place covers:

Example 1, from

DE19921546:

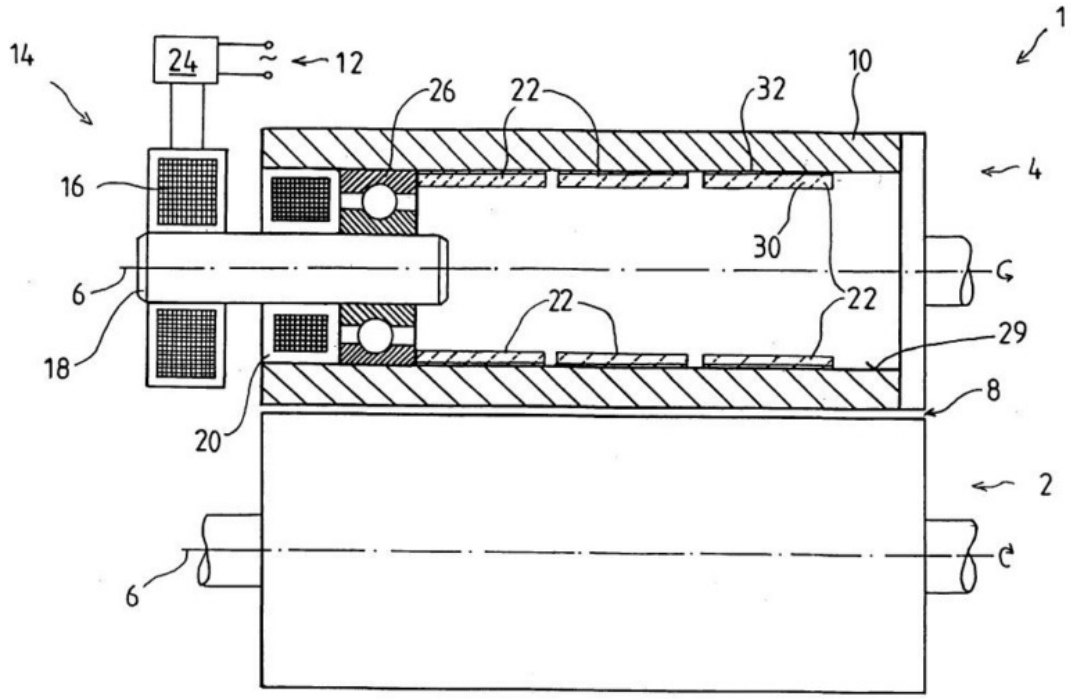

B29C 65/34

using heated elements which remain in the joint, e.g. "verlorenes Schweisselement"

References

Informative references

Attention is drawn to the following places, which may be of interest for search:

Heating or curing using lost heating elements, i.e. heating means incorporated and remaining in the formed article	B29C 35/0272
Multistep processes for producing pipe joints provided with electrical wiring	B29D 23/005
Plastic pipe welded joints with an electrical resistance incorporated in the joint	F16L 47/03

B29C 65/342

{comprising at least a single wire, e.g. in the form of a winding}

Definition statement

This place covers:

Example 1, from

DE3411179:

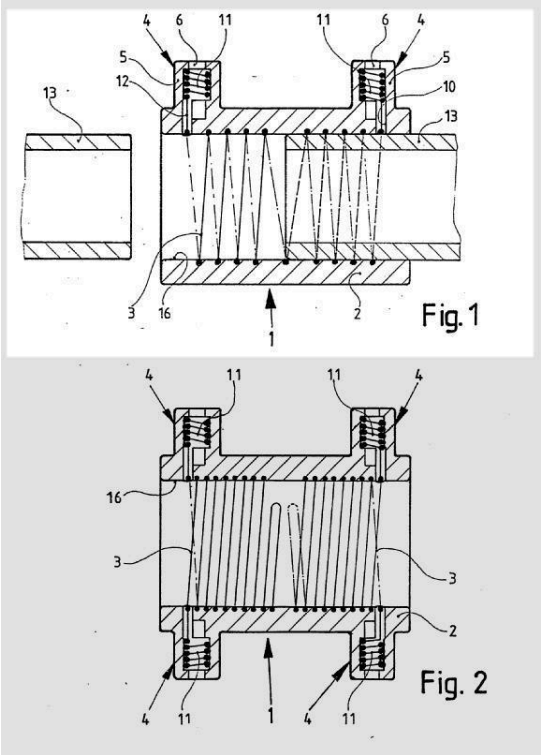

Example 2, from

JP6074386:

【図7】

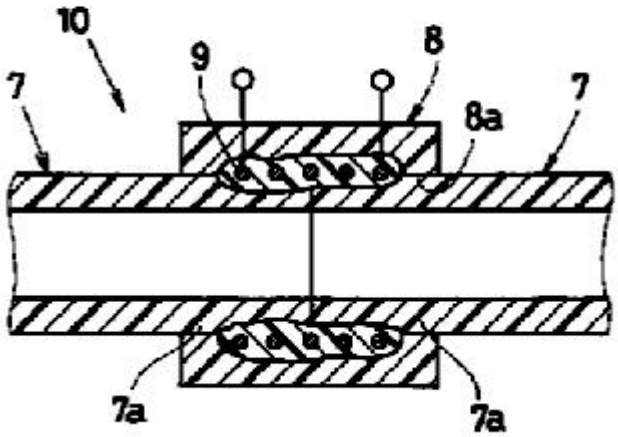

B29C 65/3424

{said at least a single wire having the form of a coil spring}

Definition statement

This place covers:

Example 1, from

FR1049710:

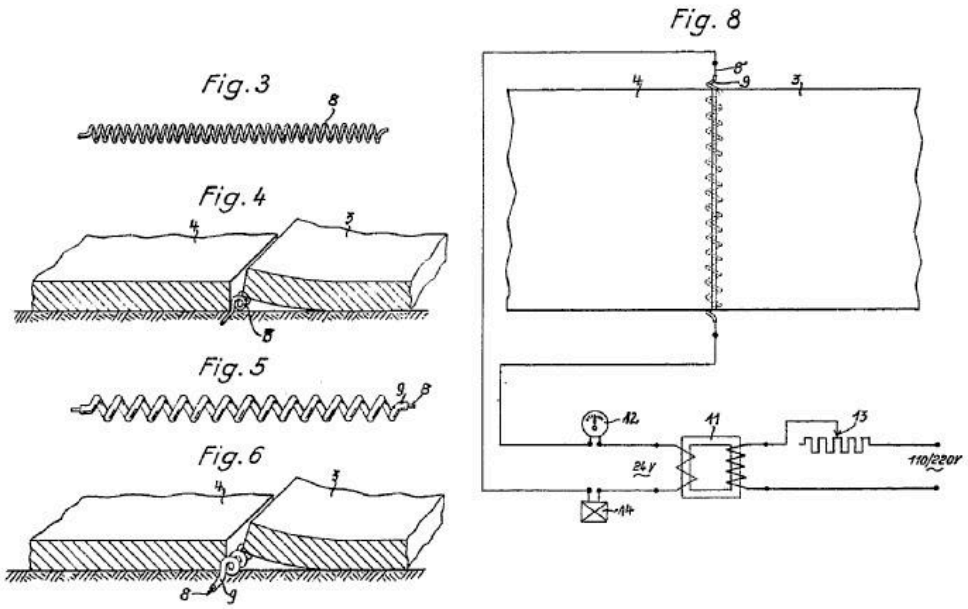

B29C 65/3428

{said at least a single wire having a waveform, e.g. a sinusoidal form}

Definition statement

This place covers:

Example 1, from

FR2182587:

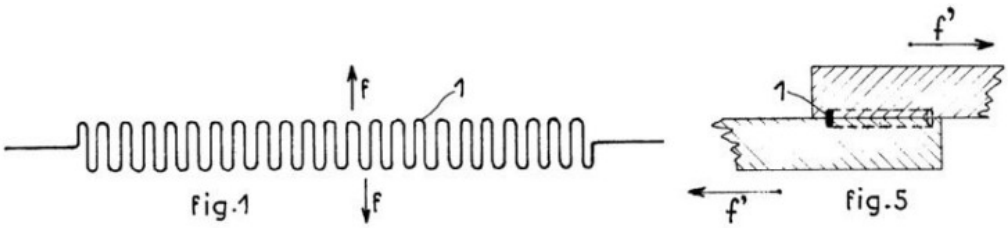

B29C 65/3432

{comprising several wires, e.g. in the form of several independent windings (B29C 65/3436, B29C 65/344 take precedence)}

Definition statement

This place covers:

Example 1, from

DE3411179:

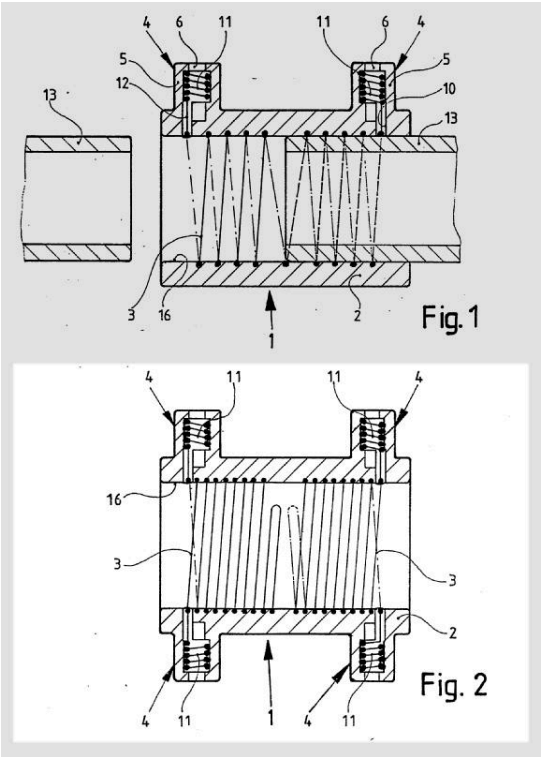

B29C 65/344

{being a woven or non-woven fabric or being a mesh}

Definition statement

This place covers:

Example 1, from

FR1072800:

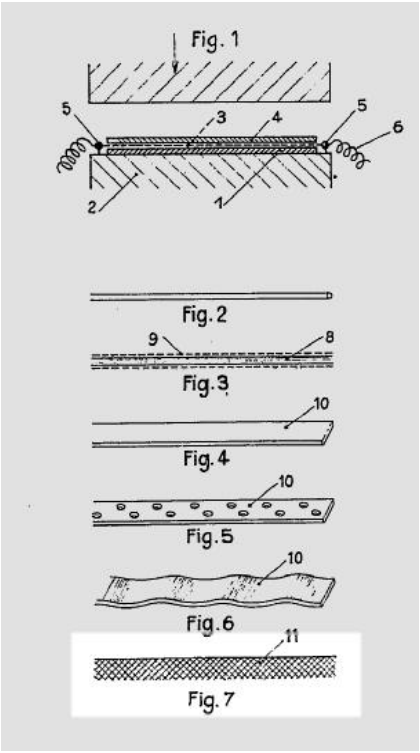

B29C 65/3444

{being a ribbon, band or strip}

Definition statement

This place covers:

Example 1, from

FR1072800:

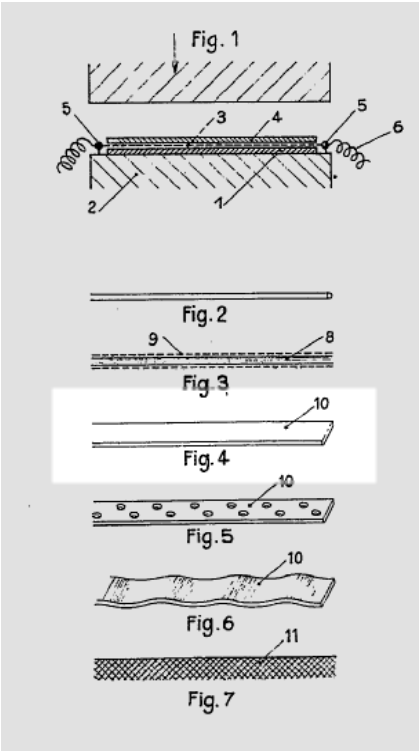

B29C 65/3448

{said ribbon, band or strip being perforated}

Definition statement

This place covers:

Example 1, from

FR1072800:

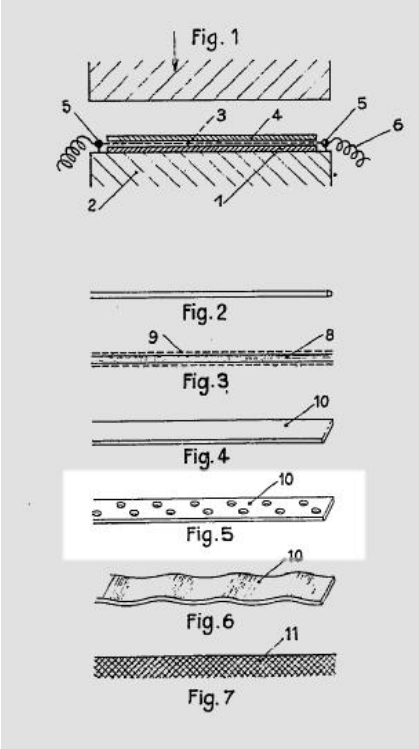

B29C 65/3452

{forming a sleeve, e.g. a wrap-around sleeve}

Definition statement

This place covers:

Example 1, from

JP4308729:

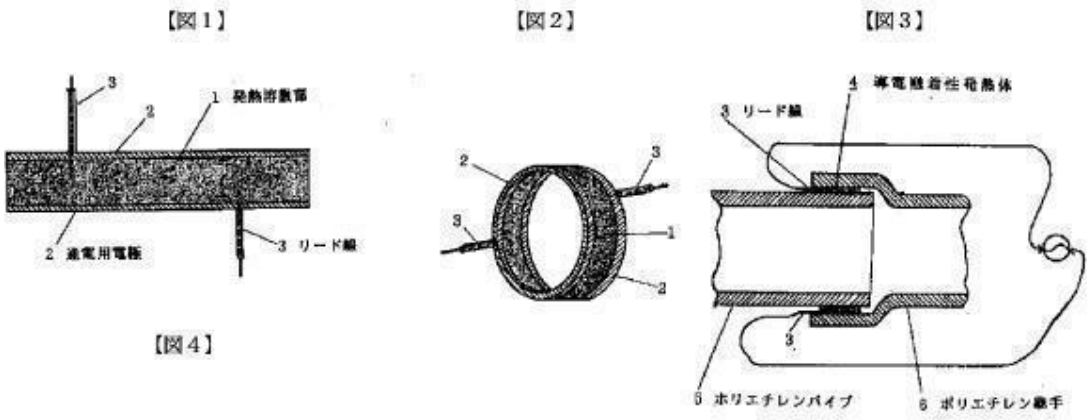

Example 2, from

JP2001214994:

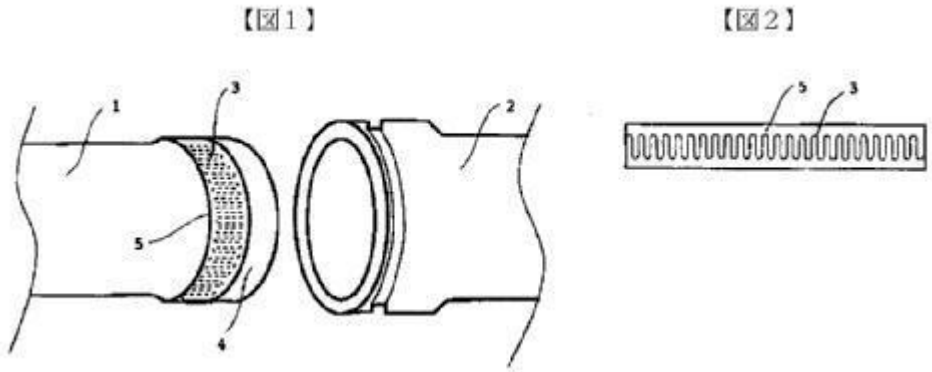

Example 3, from

NL7004944:

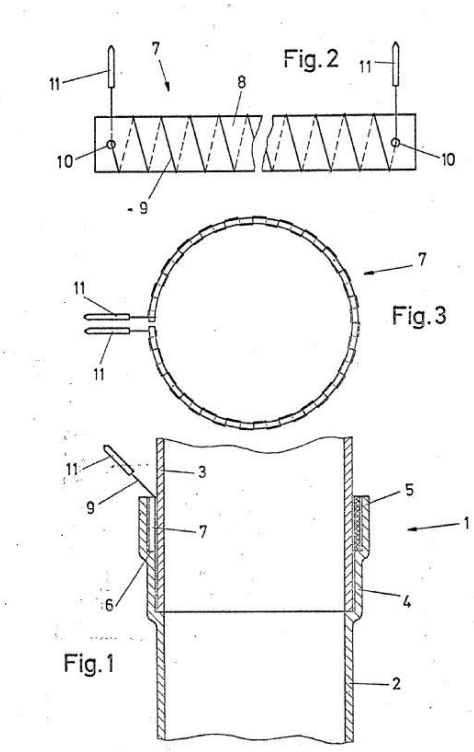

B29C 65/3464

{characterised by the cross-section of said heated elements which remain in the joint or by the cross-section of their coating, e.g. being triangular}

Definition statement

This place covers:

Example 1, from

EP0183188:

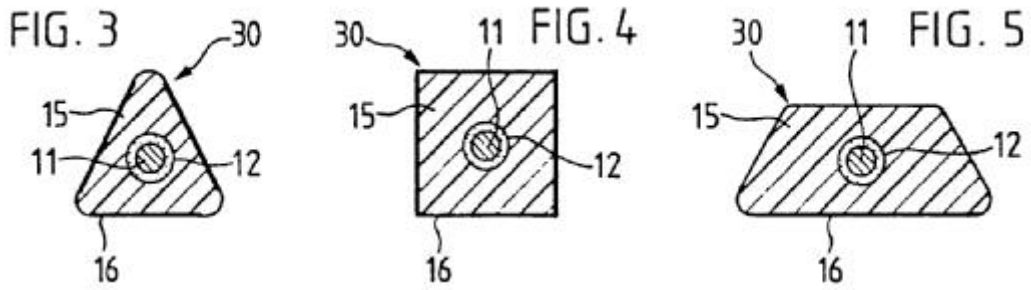

B29C 65/3468

{characterised by the means for supplying heat to said heated elements which remain in the join, e.g. special electrical connectors of windings (B29C 65/3668 takes precedence)}

Definition statement

This place covers:

Example 1, from

DE3411179:

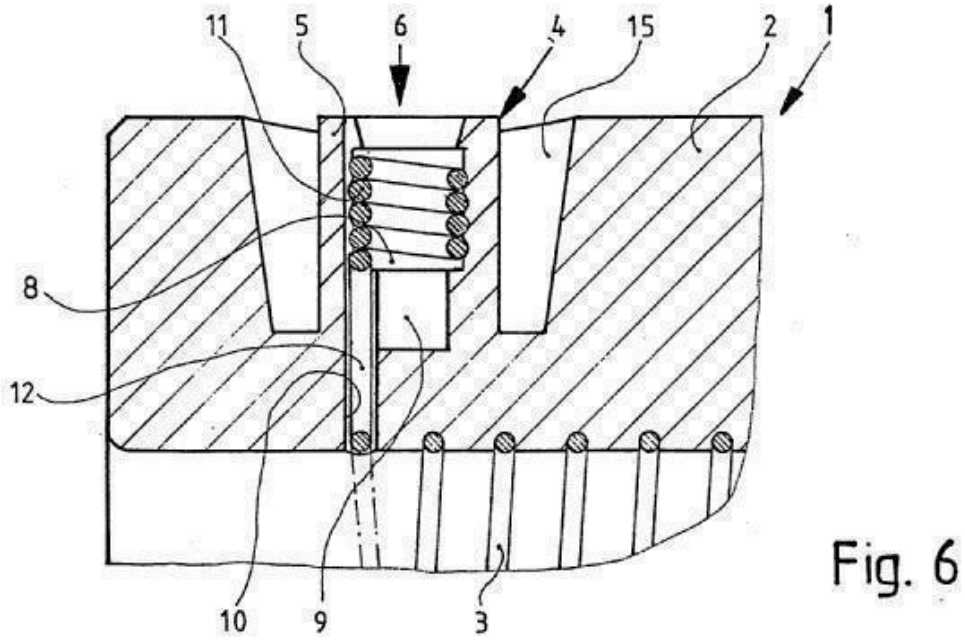

Fig. 6

Example 2, from

EP0586283:

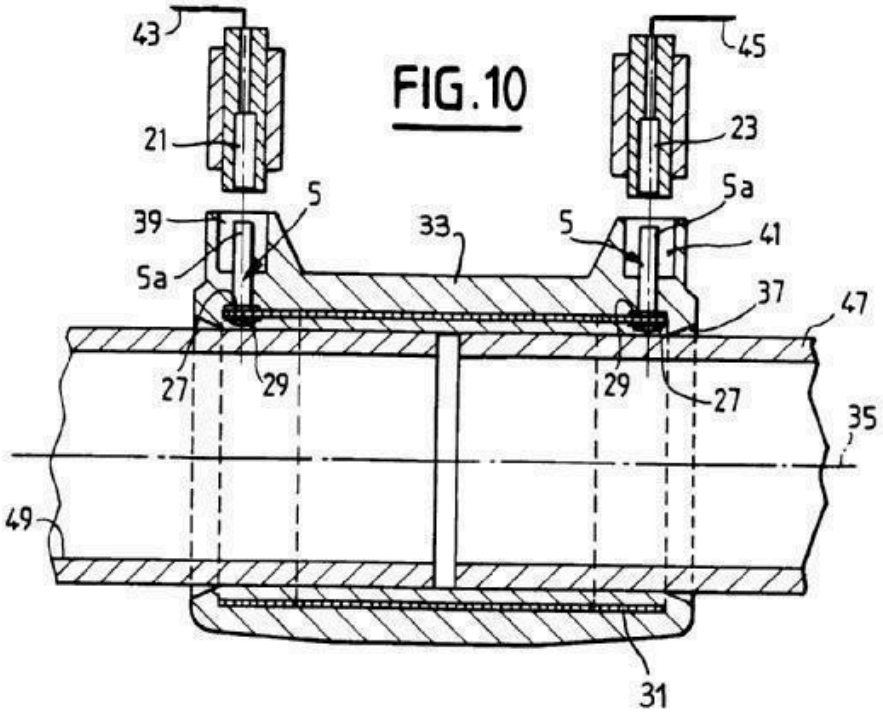

FIG.10

Example 3, from

WO03029717:

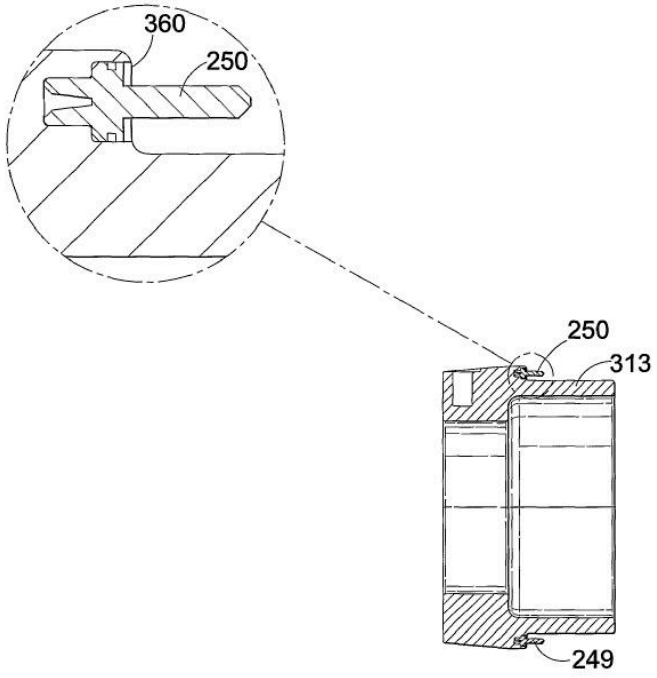

Fig.15B

B29C 65/36

heated by induction

References

Informative references

Attention is drawn to the following places, which may be of interest for search:

Devices for, or methods of, sealing or securing package folds or closures by induction welding	B65B 51/227
Induction heating	H05B 6/02

B29C 65/3608

{comprising single particles, e.g. fillers or discontinuous fibre-reinforcements}

Definition statement

This place covers:

Example 1, from

WO2010083942:

Fig_2

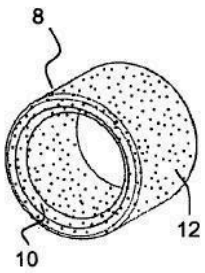

Fig_4

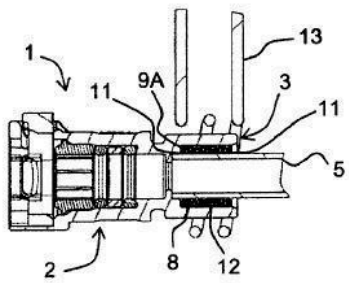

Example 2, from

US5124203:

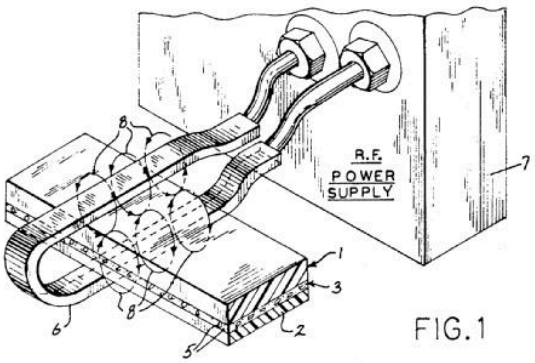

FIG.1

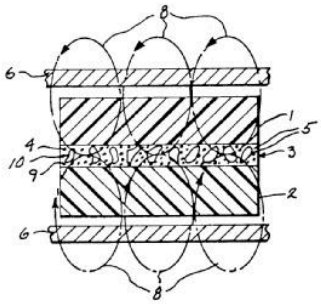

FIG. 2

B29C 65/362

{comprising at least a single wire, e.g. in the form of a winding}

Definition statement

This place covers:

Example 1, from

JP6074386:

【図５】

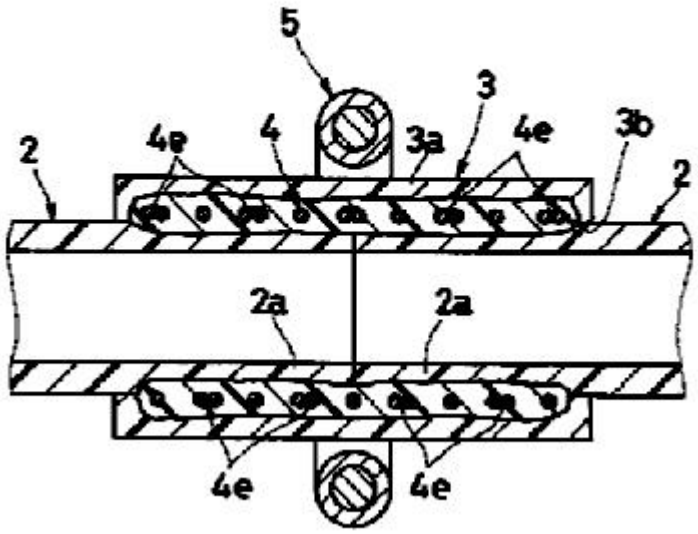

B29C 65/364

{being a woven or non-woven fabric or being a mesh}

Definition statement

This place covers:

Example 1, from

WO9628683:

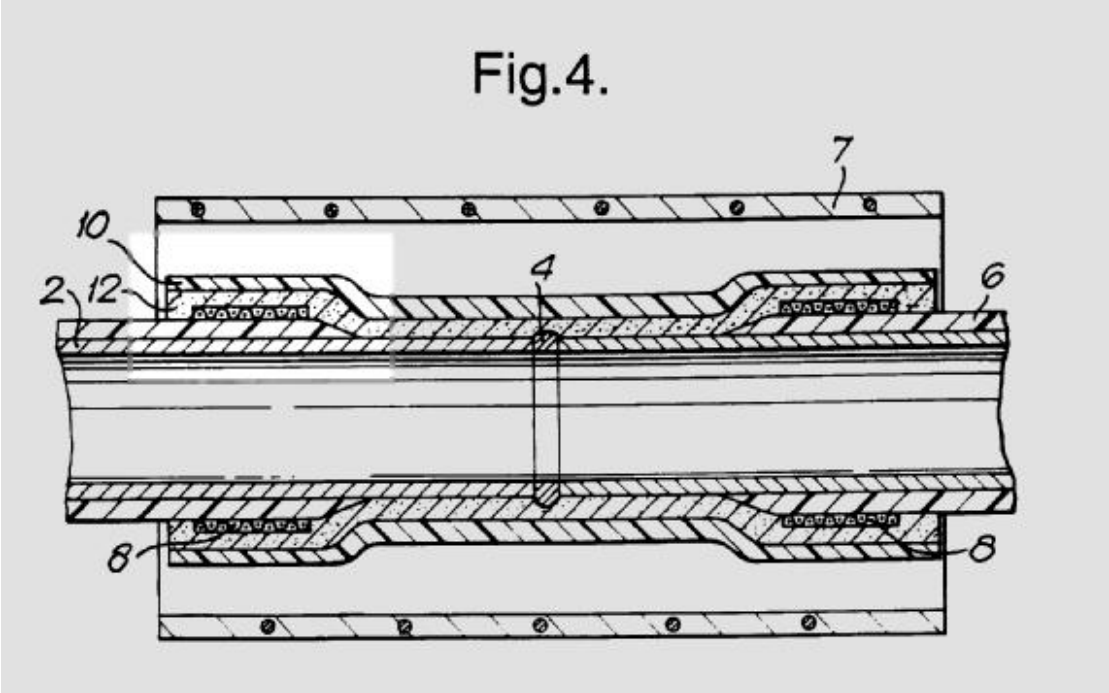

B29C 65/3656

{being a layer of a multilayer part to be joined, e.g. for joining plastic-metal laminates}

Definition statement

This place covers:

Example 1, from

JP5196187

【図１】

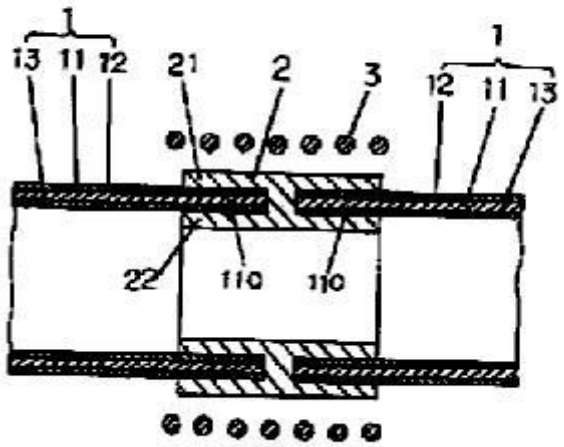

B29C 65/40

Applying molten plastics, e.g. hot melt (using welding bar {combined with hot gases} B29C 65/12; by moulding B29C 65/70)

Definition statement

This place covers:

Example 1, from

US3008862:

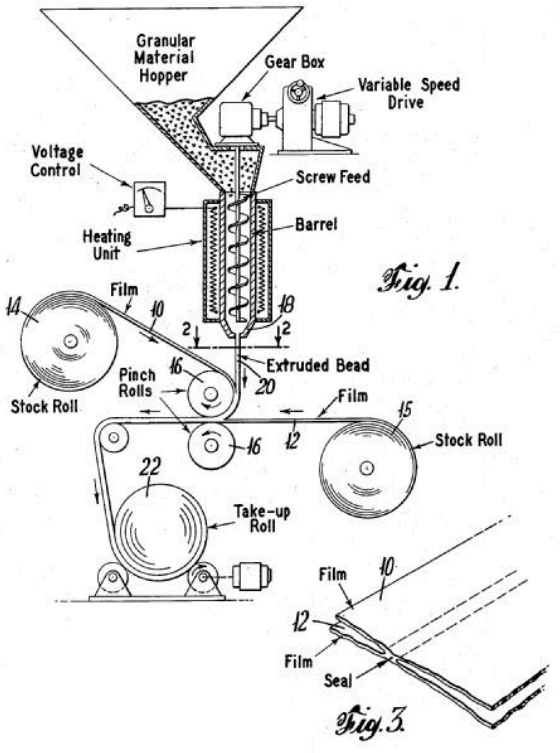

B29C 65/42

between pre-assembled parts {(B29C 65/605 takes precedence)}

Definition statement

This place covers:

Example 1, from

JP3180331:

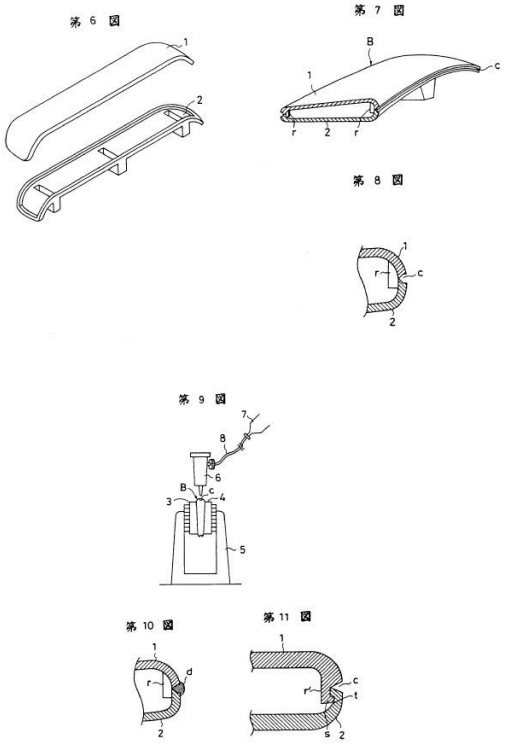

B29C 65/44

Joining a heated non plastics element to a plastics element

Definition statement

This place covers:

Example 1, from

US2007284040:

Fig. 1

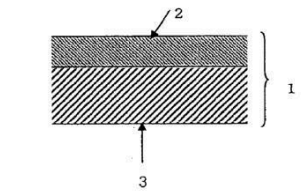

Fig. 2

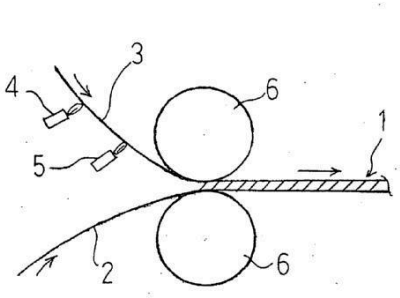

References

Informative references

Attention is drawn to the following places, which may be of interest for search:

Vehicle superstructures characterised by the material thereof, characterised by combining metal and synthetic material, preformed metal and synthetic material elements being joined together	B62D 29/005

B29C 65/46

heated by induction

Definition statement

This place covers:

Example 1, from

US5771589:

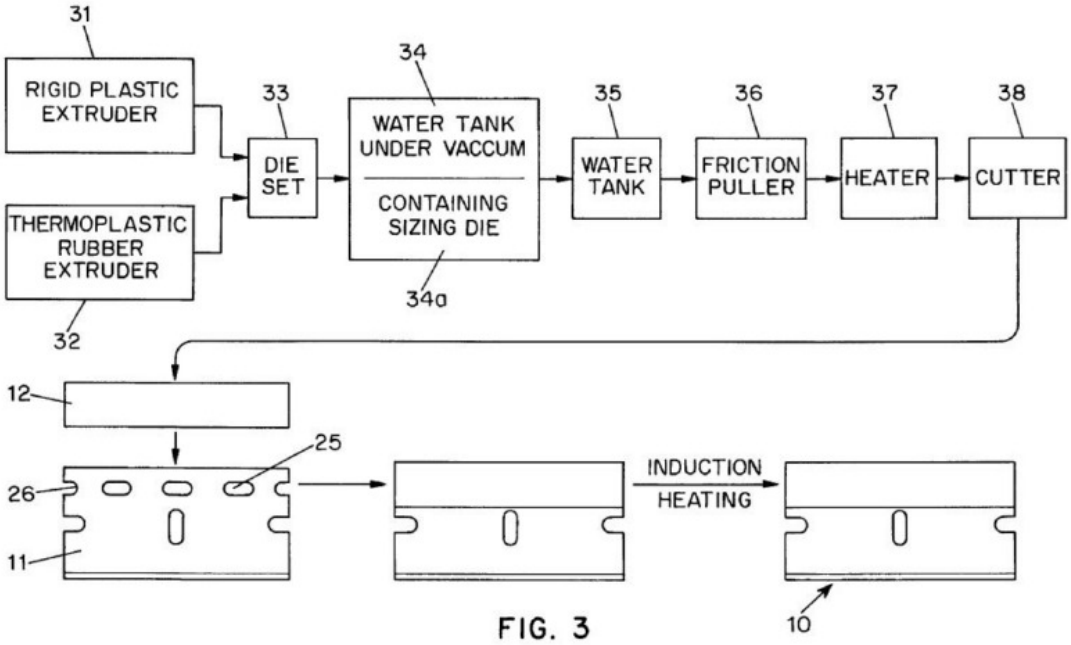

FIG. 3

Special rules of classification

The joining of metal-plastic laminates by induction is to be classified in B29C 65/3656, B29C 65/368 and B29C 66/72321

B29C 65/48

using adhesives {, i.e. using supplementary joining material; solvent bonding}

References

Informative references

Attention is drawn to the following places, which may be of interest for search:

Garment hems or seams made by gluing	A41D 27/245
Joining garments parts or blanks by gluing	A41H 43/04
Applying glue or adhesive peculiar to bookbinding by fusing, welding sheets together	B42C 9/0093
Closing containers or receptacles after filling, by applying separate preformed closures, e.g. lids, covers, securing said closures on said containers by gluing	B65B 7/2871
Securing ends of binding material by applying adhesive	B65B 13/32
Chemical aspects of bonding of preformed macromolecular material to the same or other solid material, e.g. using adhesives	C08J 5/12
Adhesive processes in general	C09J 5/00
Connecting constructional elements or machine parts by gluing	F16B 11/006
Connecting constructional elements or machine parts by gluing of tubular elements or rods in coaxial engagement	F16B 11/008

Special rules of classification

When classifying in this group, techniques for heating heat-activated adhesives are additionally classified in B29C 65/02 and subgroups

B29C 65/4825

{Pressure sensitive adhesives}

References

Informative references

Attention is drawn to the following places, which may be of interest for search:

Adhesives in the form of films or foils, on paper or textile fabric, characterised by pressure-sensitive adhesive	C09J 7/21, C09J 7/38
Adhesives in the form of films or foils, on carriers other than paper or textile fabrics, characterised by pressure-sensitive adhesive	C09J 7/22, C09J 7/38
Adhesives in the form of films or foils, on carriers, characterised by pressure-sensitive adhesive	C09J 7/38

B29C 65/4835

{Heat curing adhesives}

References

Informative references

Attention is drawn to the following places, which may be of interest for search:

Adhesives in the form of films or foils, on paper or textile fabric, characterised by heat-curable adhesive	C09J 7/21, C09J 7/35
Adhesives in the form of films or foils, on carriers other than paper or textile fabrics, essentially based on heat-curable adhesive	C09J 7/22, C09J 7/35
Adhesives in the form of films or foils, on carriers, essentially based on heat-curable adhesive	C09J 7/35

B29C 65/484

{Moisture curing adhesives}

References

Informative references

Attention is drawn to the following places, which may be of interest for search:

Adhesive in the form of films or foils, on paper or textile fabrics, characterised by water-activable adhesive	C09J 7/21

B29C 65/4855

{characterised by their physical properties, e.g. being electrically-conductive}

References

Informative references

Attention is drawn to the following places, which may be of interest for search:

Adhesives characterised by their physical nature, in general	C09J 9/00
Electrically-conducting adhesives, in general	C09J 9/02

B29C 65/486

{characterised by their physical form being non-liquid, e.g. in the form of granules or powders (B29C 65/50 takes precedence)}

Definition statement

This place covers:

Example 1, from

FIG. 1.

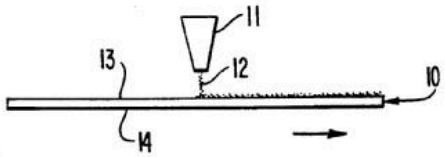

FIG. 2.

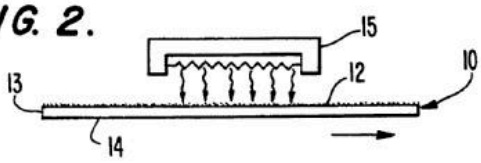

FIG. 3.

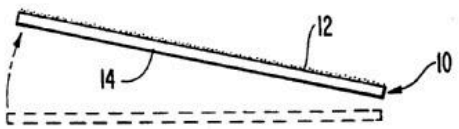

US5087311

FIG. 5.

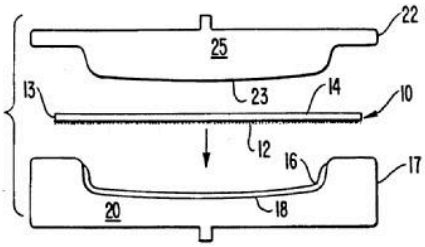

FIG. 6.

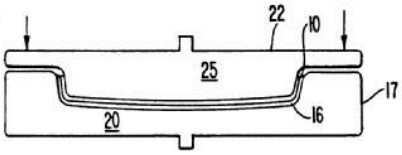

FIG. 7.

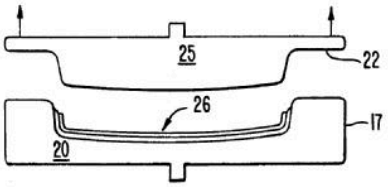

B29C 65/4865

{containing additives (C09J 11/00 and subgroups take precedence)}

References

Informative references

Attention is drawn to the following places, which may be of interest for search:

Adhesive additives, in general	C09J 11/00

B29C 65/4875

{being spherical, e.g. particles or powders}

Definition statement

This place covers:

Example 1, from

US2010276065:

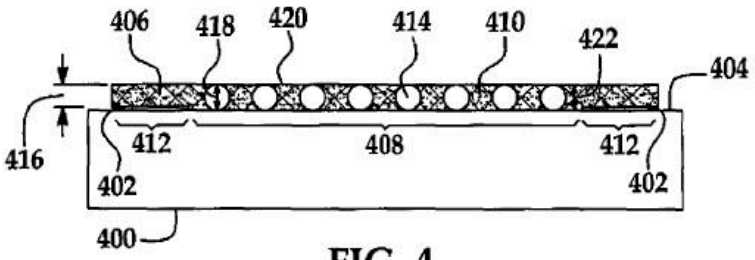

FIG. 4

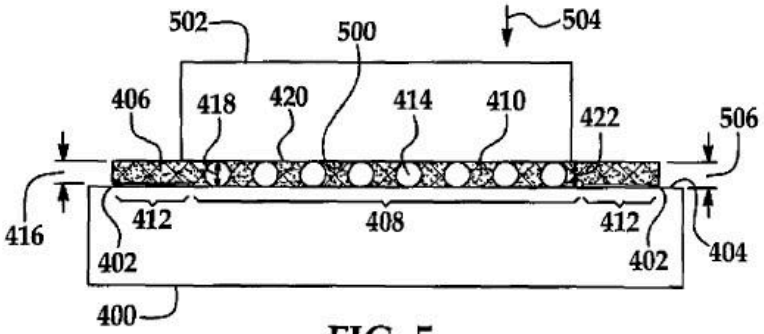

FIG. 5

B29C 65/4885

{characterised by their composition being non-plastics}

References

Informative references

Attention is drawn to the following places, which may be of interest for search:

Non-macromolecular adhesive additives, in general	C09J 11/02

B29C 65/4895

{Solvent bonding, i.e. the surfaces of the parts to be joined being treated with solvents, swelling or softening agents, without adhesives}

Definition statement

This place covers:

Example 1, from

WO2009125997:

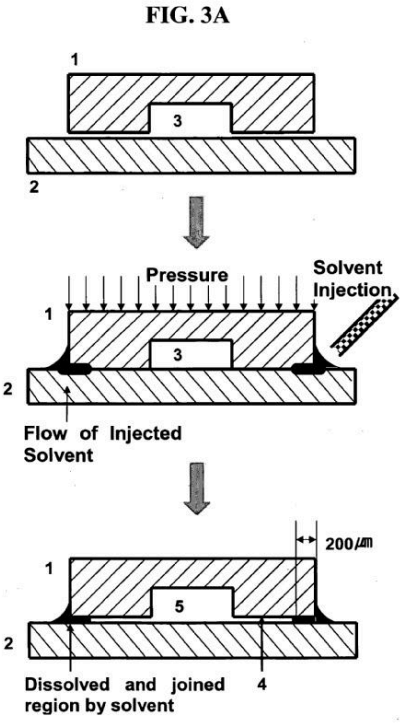

References

Informative references

Attention is drawn to the following places, which may be of interest for search:

Bonding of a preformed macromolecular material using low molecular chemically inert solvents, swelling or softening agents	C08J 5/122
Non-woven fabrics formed from fleeces or layers composed of fibres by welding together the fibres by applying solvents	D04H 1/552

B29C 65/50

using adhesive tape {, e.g. thermoplastic tape; using threads or the like (B29C 65/3444 takes precedence)}

References

Informative references

Attention is drawn to the following places, which may be of interest for search:

Closing containers or receptables after filling, by applying separate preformed closures, e.g. lids, covers, securing said closures on said containers by adhesive tape	B65B 7/2864
Adhesives in the form of films or foils	C09J 7/00

B29C 65/5035

{being in thread form, i.e. in the form of a single filament, e.g. in the form of a single coated filament}

Definition statement

This place covers:

Example 1, from

JP1027928:

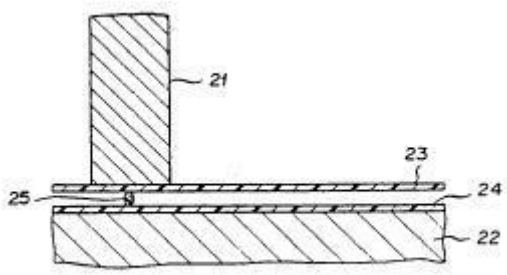

B29C 65/5042

{covering both elements to be joined}

Definition statement

This place covers:

Example 1, from

WO8404486:

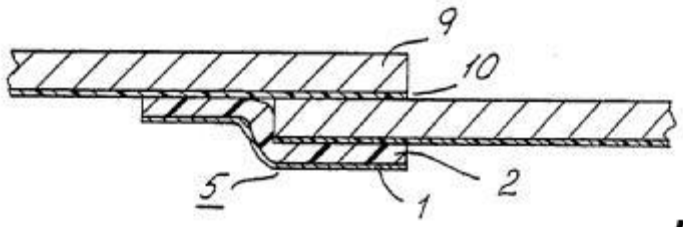

Fig. 3

B29C 65/505

{and placed in a recess formed in the parts to be joined, e.g. in order to obtain a continuous surface}

Definition statement

This place covers:

Example 1, from

JP58028345:

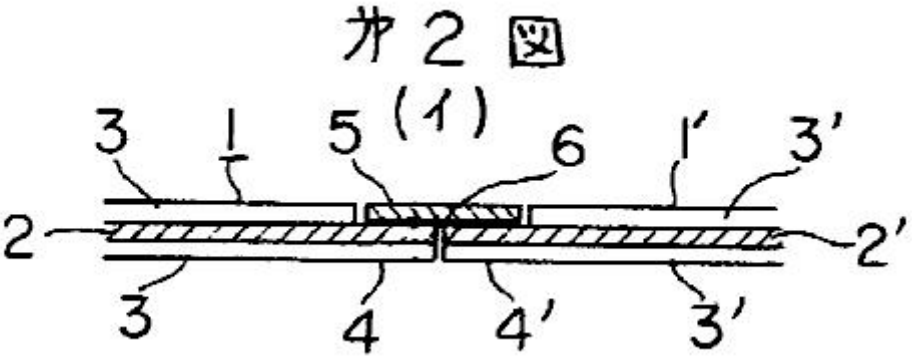

B29C 65/5057

{positioned between the surfaces to be joined (B29C 65/5035 takes precedence)}

Definition statement

This place covers:

Example 1, from

WO8404486:

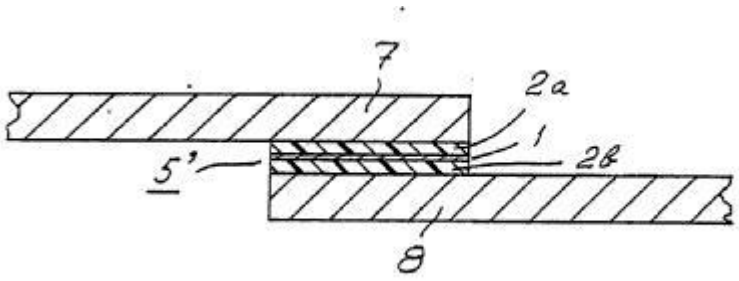

Fig. 2

References

Informative references

Attention is drawn to the following places, which may be of interest for search:

Adhesive processes in general; Joining materials by welding overlapping edges with an insertion of plastic material	C09J 5/10

B29C 65/5071

{and being composed by one single element}

Definition statement

This place covers:

Example 1, from

EP1905570:

Fig. 8

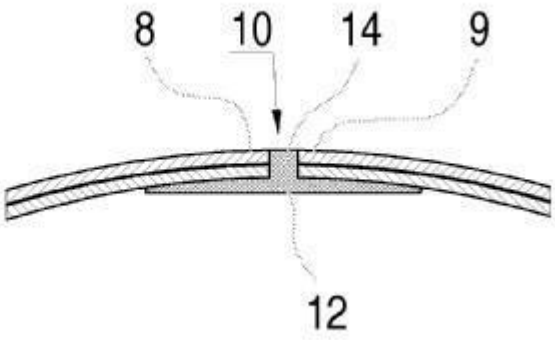

Example 2, from

DE102005010467:

FIG. 2

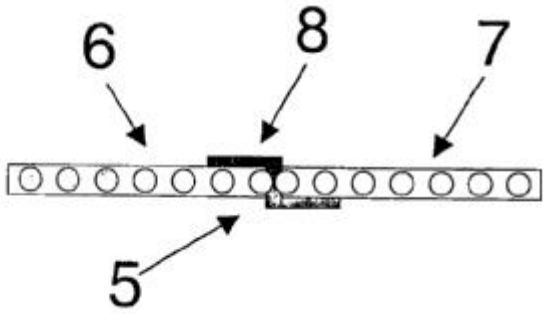

FIG. 6

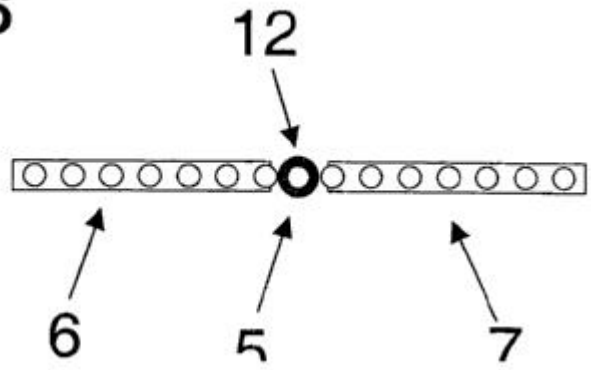

B29C 65/5078

{and being composed by several elements}

Definition statement

This place covers:

Example 1, from

US2009317580:

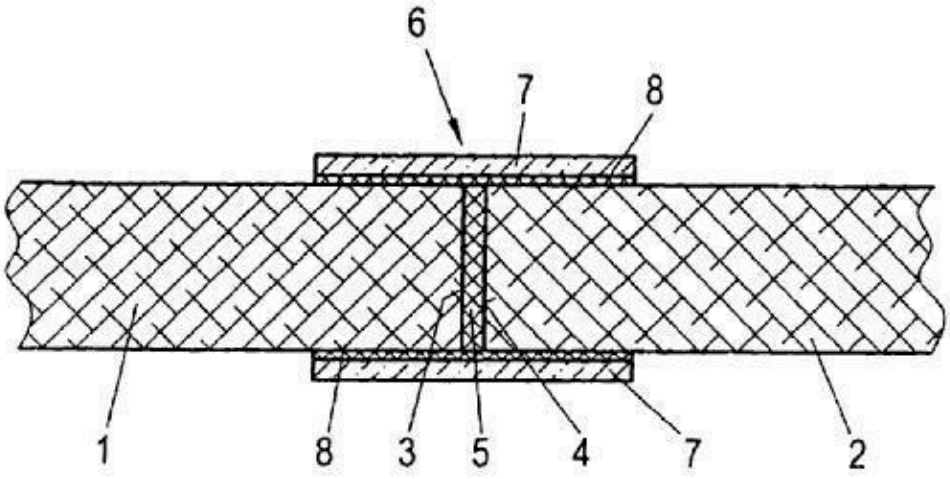

Fig. 1

Example 2, from

US2003138586:

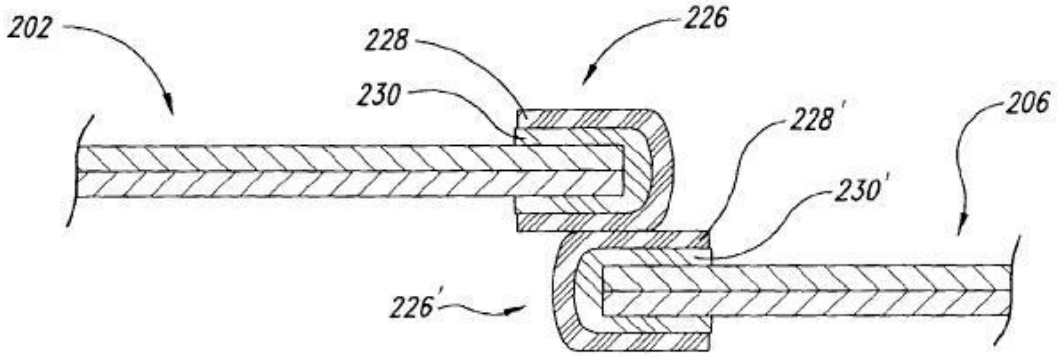

Fig. 10

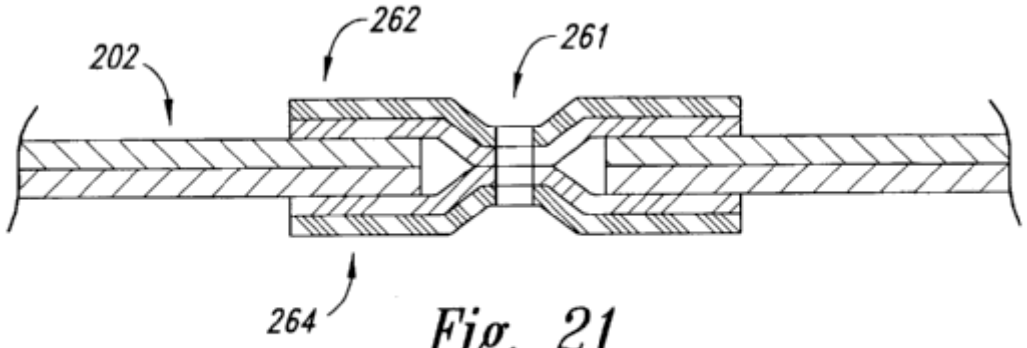

Fig. 21

B29C 65/5085

{and comprising grooves, e.g. being E-shaped, H-shaped}

Definition statement

This place covers:

Example 1, from

FR2919819:

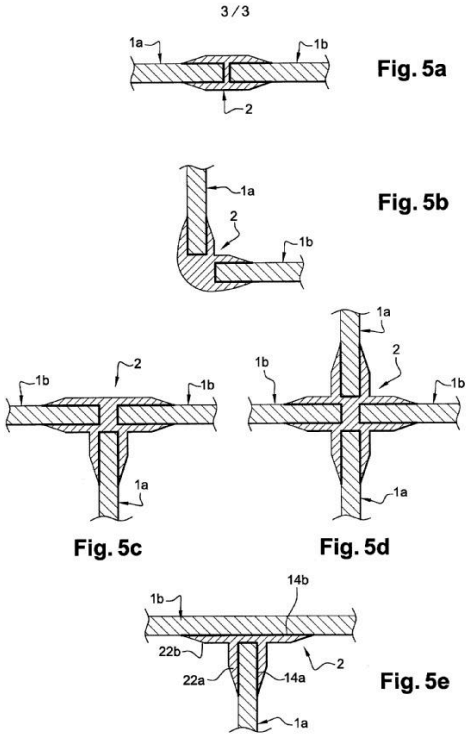

Fig. 5a

Fig. 5b

Fig. 5c

Fig. 5d

Fig. 5e

B29C 65/5092

{characterised by the tape handling mechanisms, e.g. using vacuum}

Definition statement

This place covers:

Example 1, from

WO0046013:

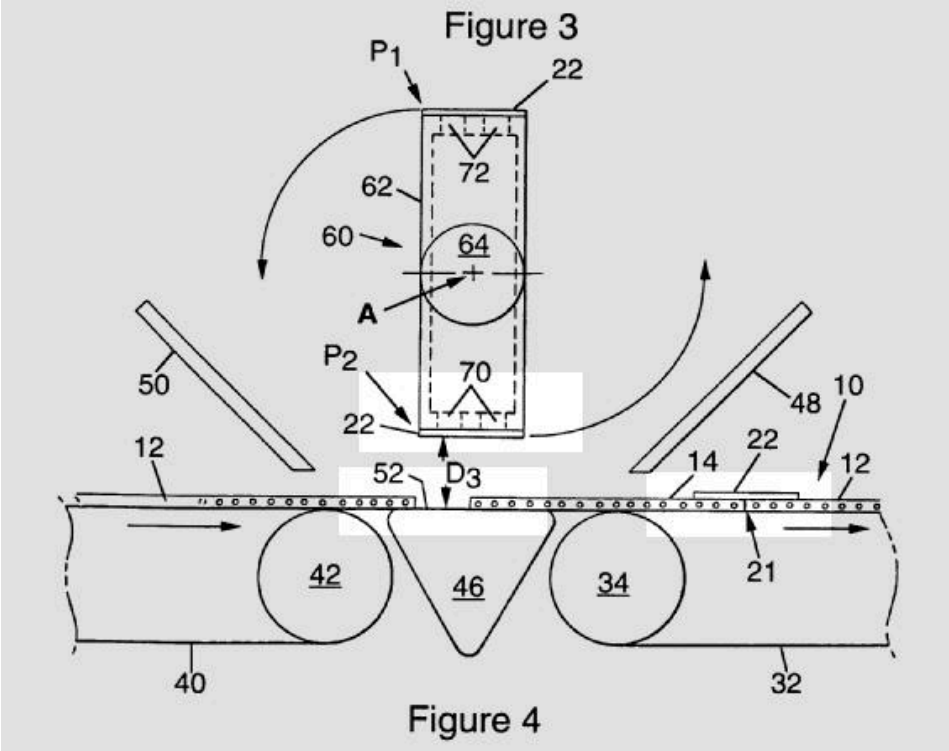

Figure 4

B29C 65/52

{characterised by the way of} applying the adhesive {(B29C 65/50 takes precedence; apparatus for applying liquids in general B05C; processes for applying liquids in general B05D)}

References

Informative references

Attention is drawn to the following places, which may be of interest for search:

Devices for, or methods of, sealing or securing package folds or closures applying adhesives or sealing liquids	B65B 51/02
Devices for, or methods of, sealing or securing package folds or closures applying adhesives or sealing liquids using applicator nozzles	B65B 51/023
Devices for, or methods of, sealing or securing package folds or closures applying adhesives or sealing liquids using rotating applicators	B65B 51/026

B29C 65/521

{by spin coating}

Definition statement

This place covers:

Example 1, from

US2009040913:

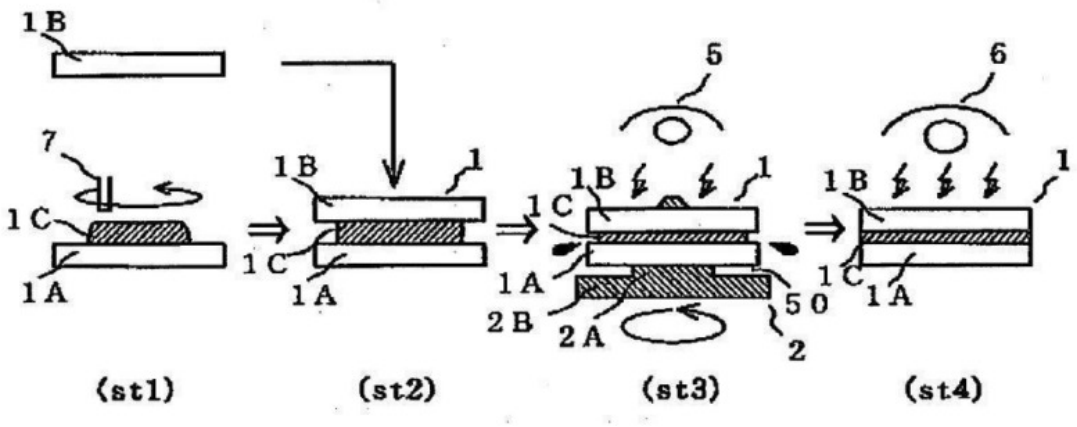

Example 2, from

US6263939:

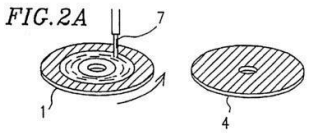

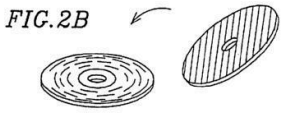

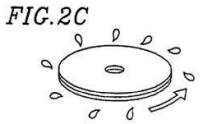

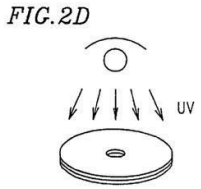

References

Informative references

Attention is drawn to the following places, which may be of interest for search:

Applying liquids to surfaces by spin coating	B05D 1/005

B29C 65/522

{by spraying, e.g. by flame spraying}

Definition statement

This place covers:

Example 1, from

JP2008114530:

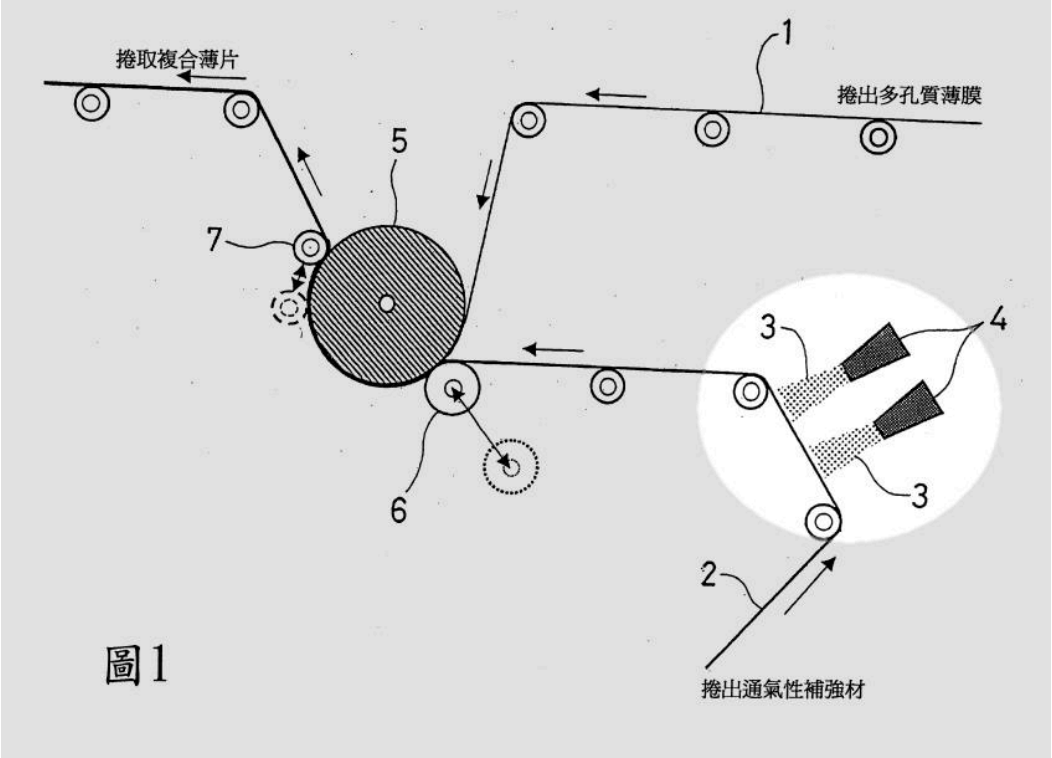

References

Informative references

Attention is drawn to the following places, which may be of interest for search:

Spraying apparatus in general	B05B
Applying liquids to surfaces by spraying	B05D 1/02
Applying liquids to surfaces by flame spraying	B05D 1/08

B29C 65/523

{by dipping}

Definition statement

This place covers:

Example 1, from

JP5261821:

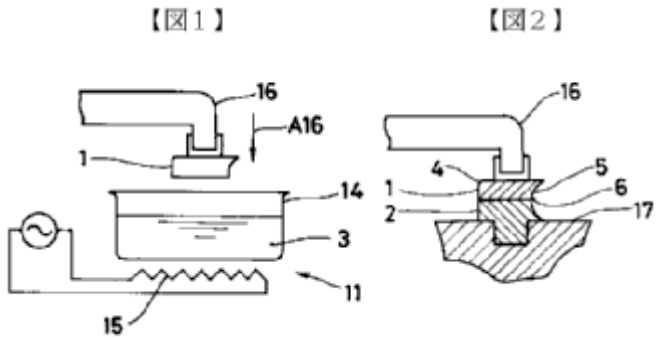

References

Informative references

Attention is drawn to the following places, which may be of interest for search:

Applying liquids to surfaces by dipping	B05D 1/18

B29C 65/524

{by applying the adhesive from an outlet device in contact with, or almost in contact with, the surface of the part to be joined}

Definition statement

This place covers:

Example 1, from

US4512947:

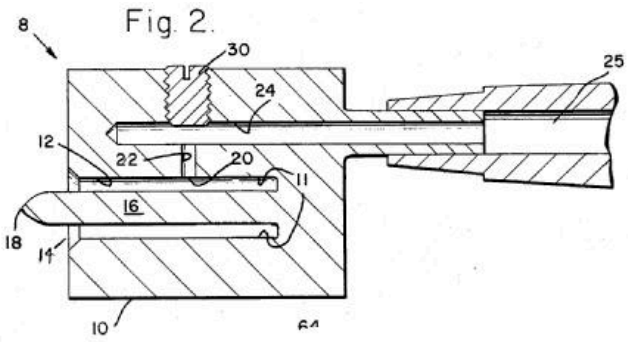

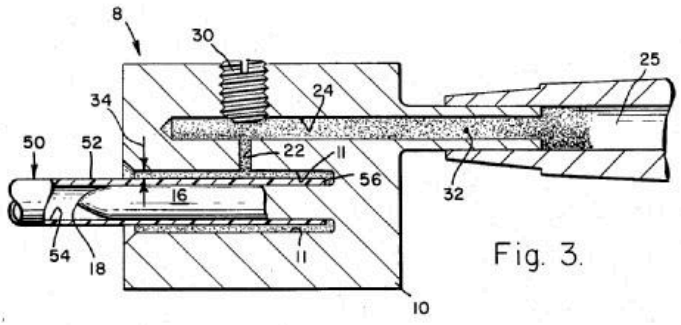

References

Informative references

Attention is drawn to the following places, which may be of interest for search:

Applying liquids to surfaces by applying the liquid from an outlet device in contact with, or almost in contact with, the surface	B05D 1/26

B29C 65/525

{by extrusion coating}

References

Informative references

Attention is drawn to the following places, which may be of interest for search:

Applying liquids to surfaces by extrusion coating	B05D 1/265

B29C 65/526

{by printing or by transfer from the surfaces of elements carrying the adhesive, e.g. using brushes, pads, rollers, stencils or silk screens}

Definition statement

This place covers:

Example 1, from

US2005173059:

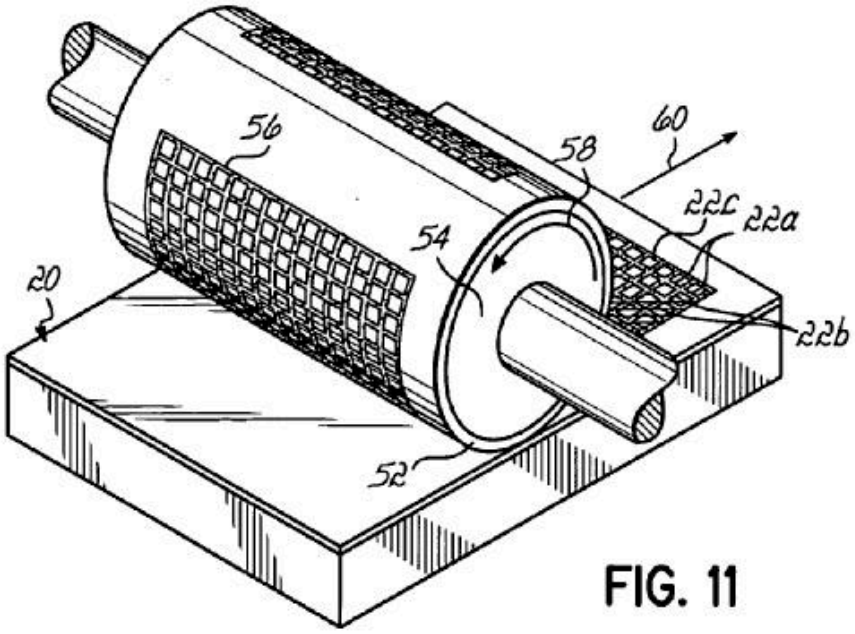

FIG. 11

References

Informative references

Attention is drawn to the following places, which may be of interest for search:

Applying liquids to surfaces by transfer from the surfaces of elements carrying the liquid, e.g. brushes, pads, rollers	B05D 1/28

B29C 65/527

{by gravity only, e.g. by pouring}

References

Informative references

Attention is drawn to the following places, which may be of interest for search:

Applying liquids to surfaces by gravity only	B05D 1/30

B29C 65/528

{by CVD or by PVD, i.e. by chemical vapour deposition or by physical vapour deposition}

References

Informative references

Attention is drawn to the following places, which may be of interest for search:

Applying liquids to surfaces by vapo-deposition of organic layers	B05D 1/60

Applying liquids to surfaces by plasma-deposition of organic layers	B05D 1/62

B29C 65/561

{using screw-threads being integral at least to one of the parts to be joined}

Definition statement

This place covers:

Example 1, from

JP2010247350:

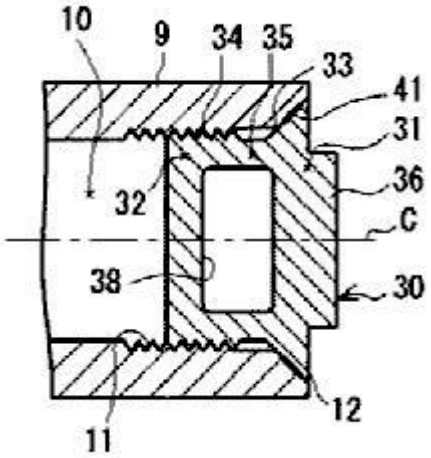

B29C 65/562

{using extra joining elements, i.e. which are not integral with the parts to be joined (using plastic snap elements B29C 65/58; using plastic rivets B29C 65/601)}

Definition statement

This place covers:

Example 1, from

JP11090986:

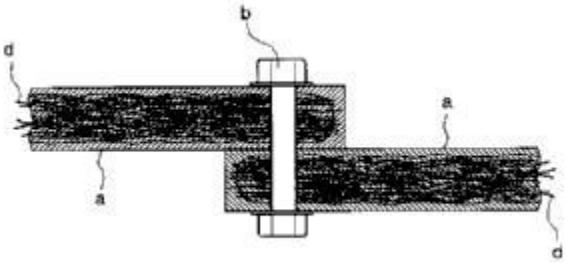

B29C 65/564

{hidden in the joint, e.g. dowels or Z-pins (B29C 65/603 takes precedence)}

Definition statement

This place covers:

Example 1, from

WO9829243:

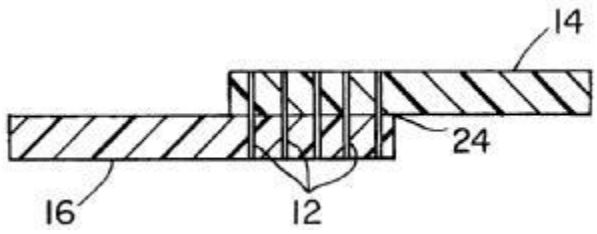

B29C 65/565

{involving interference fits, e.g. force-fits or press-fits (B29C 65/66 takes precedence)}

Definition statement

This place covers:

Example 1, from

US2007258756:

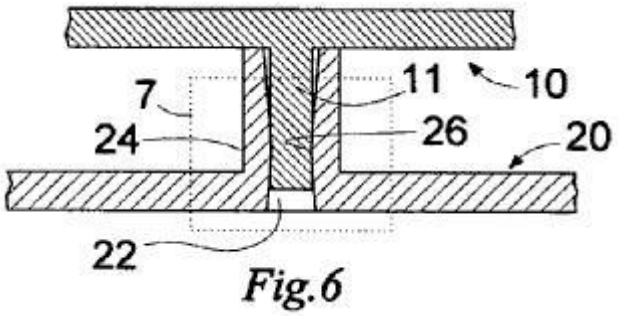

Fig.6

B29C 65/567

{using a tamping or a swaging operation, i.e. at least partially deforming the edge or the rim of a first part to be joined to clamp a second part to be joined}

Definition statement

This place covers:

Example 1, from

XP000362330:

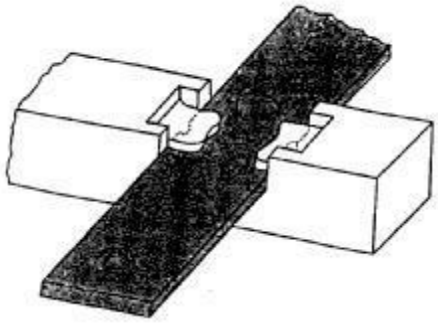

B29C 65/568

{using a swaging operation, i.e. totally deforming the edge or the rim of a first part to be joined to clamp a second part to be joined}

Definition statement

This place covers:

Example 1, from

XP000362330:

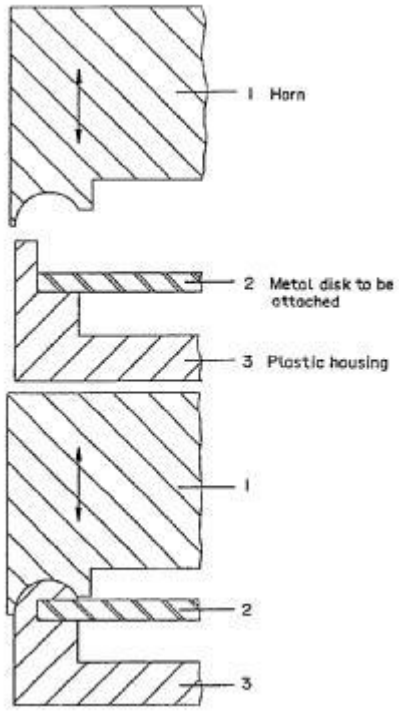

B29C 65/601

{using extra riveting elements, i.e. the rivets being non-integral with the parts to be joined}

Definition statement

This place covers:

Example 1, from

JP3205132:

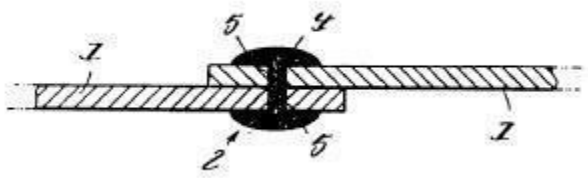

Example 2, from

DE3835027:

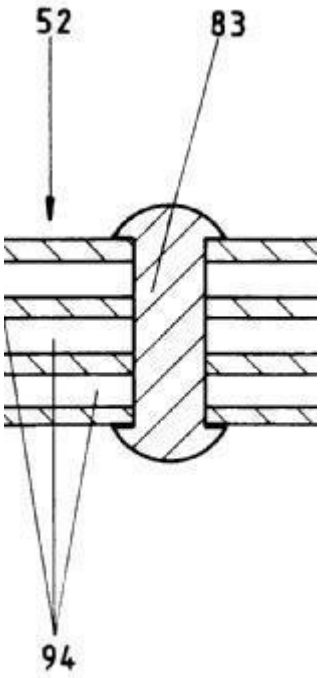

References

Informative references

Attention is drawn to the following places, which may be of interest for search:

Joining sheets or plates, in general, by means of riveting	F16B 5/04
Rivets	F16B 19/04
Riveting of metal parts	

B29C 65/602

{using hollow rivets (B29C 65/607 takes precedence)}

Definition statement

This place covers:

Example 1, from

JP8127185:

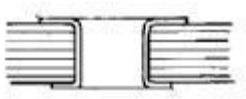

References

Informative references

Attention is drawn to the following places, which may be of interest for search:

Riveting of metal parts by riveting hollow rivets mechanically	B21J 5/04
Riveting of metal parts by riveting hollow rivets by means of hydraulic, liquid, or gas pressure	B21J 15/06
Hollow rivets	F16B 19/08

B29C 65/603

{the rivets being pushed in blind holes}

Definition statement

This place covers:

Example 1, from

DE623911:

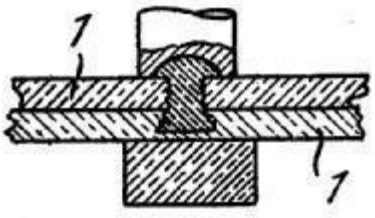

Example 2, from

EP0160425:

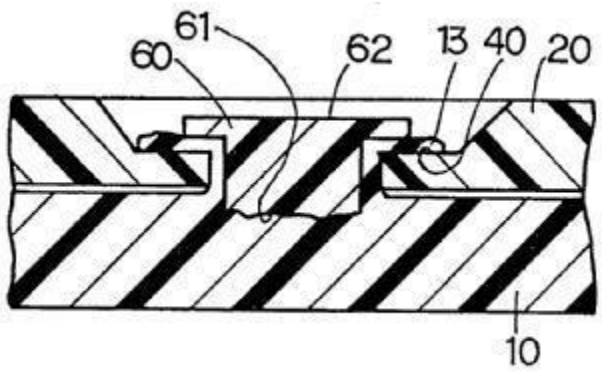

B29C 65/604

{in both parts}

Definition statement

This place covers:

Example 1, from

FR2831229:

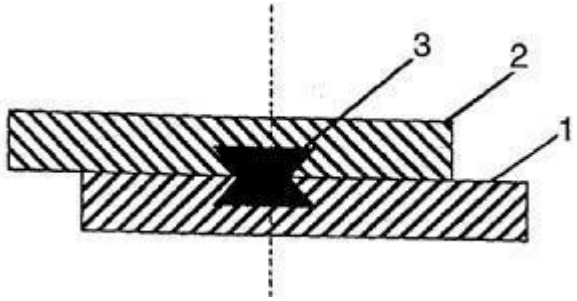

Example 2, from

US3612803:

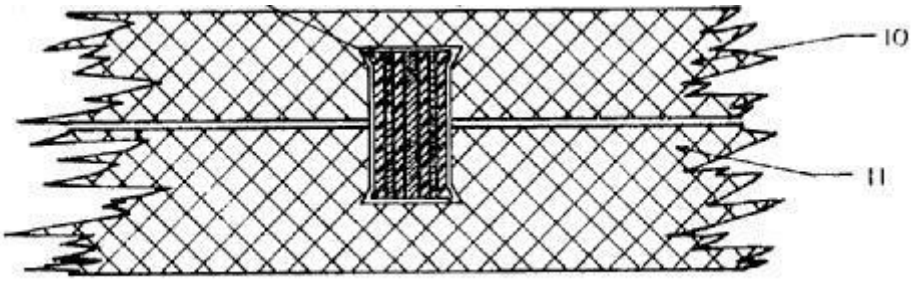

B29C 65/605

{the rivets being molded in place, e.g. by injection}

Definition statement

This place covers:

Example 1, from

GB893375:

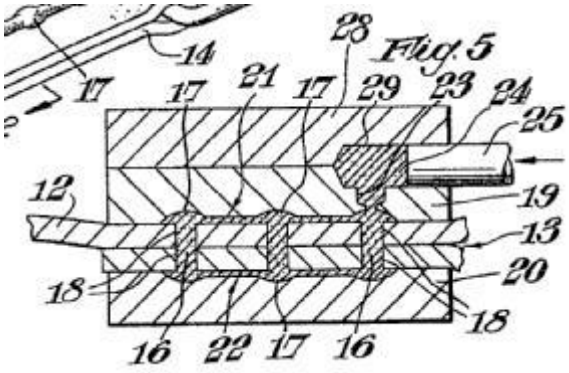

B29C 65/606

{the rivets being integral with one of the parts to be joined, i.e. staking}

Definition statement

This place covers:

Example 1, from EP1488913:

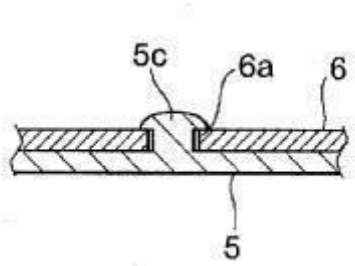

Example 2, from

XP000362330:

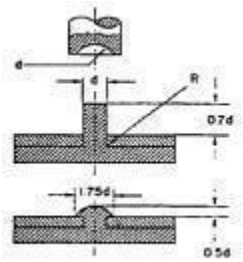

References

Informative references

Attention is drawn to the following places, which may be of interest for search:

Joining superposed metal plates by locally deforming without slitting or piercing	B21D 39/031
Joining superposed metal plates by locally deforming, by fitting a projecting part integral with one plate in a hole of the other plate	B21D 39/032

Joining sheets or plates, in general, by means of riveting, without the use of separate rivets	F16B 5/045

B29C 65/607

{the integral rivets being hollow}

Definition statement

This place covers:

Example 1, from

EP1190804:

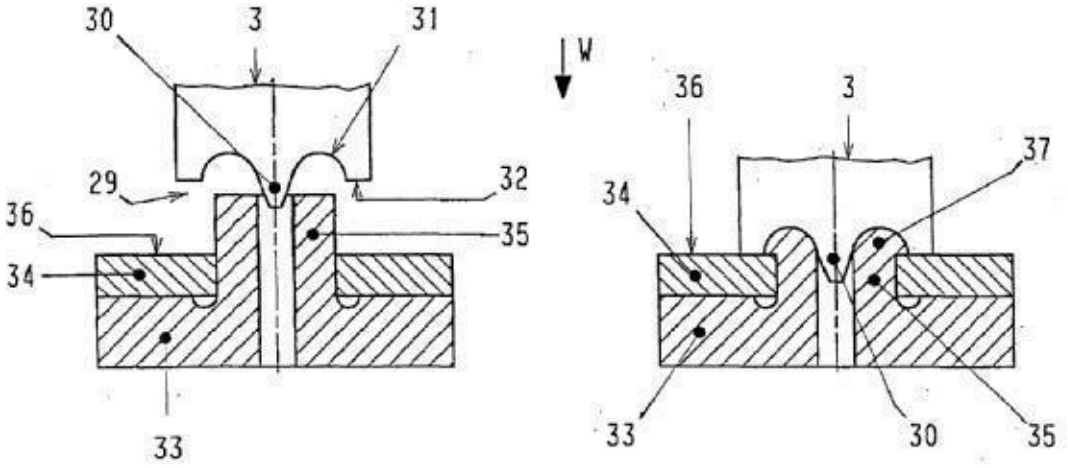

Example 2, from

XP000362330:

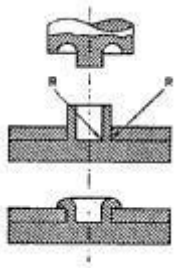

B29C 65/609

{the integral rivets being plunge-formed}

Definition statement

This place covers:

Example 1, from

DE1294647:

Fig. 1

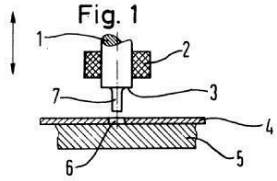

Fig. 2

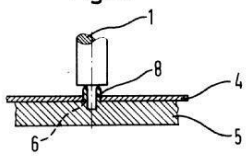

Fig. 3

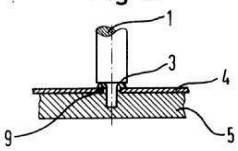

Fig. 4

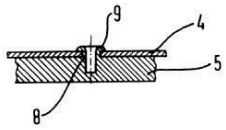

B29C 65/62

Stitching

Definition statement

This place covers:

Example 1, from

US2010193108:

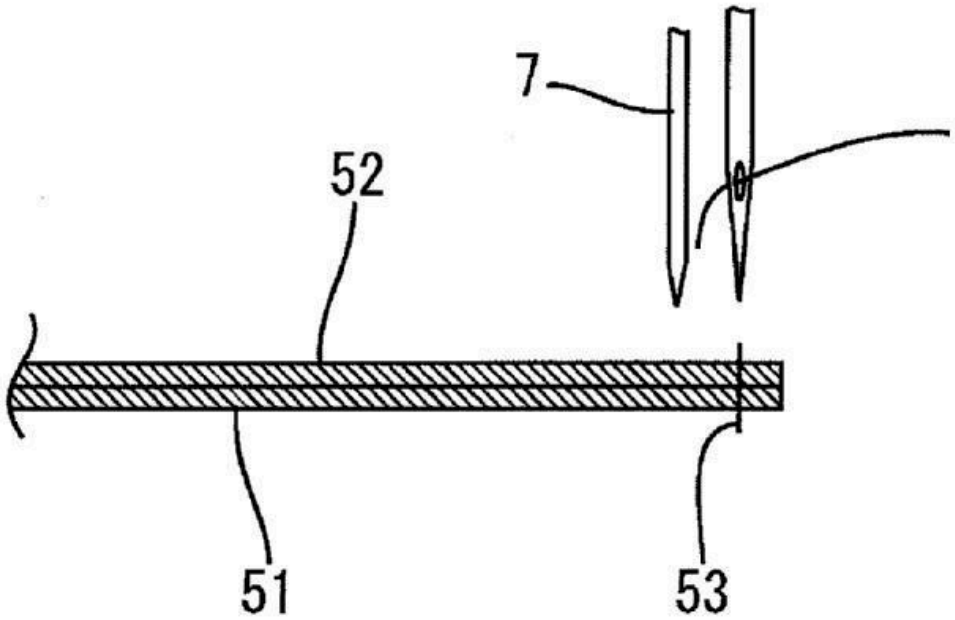

References

Informative references

Attention is drawn to the following places, which may be of interest for search:

Hems or seams of garments	A41D 27/24
Sewing in general	D05B
Joining belts by sewing	F16G 3/10

B29C 65/64

Joining a non-plastics element to a plastics element, e.g. by force (B29C 65/44 takes precedence)

References

Informative references

Attention is drawn to the following places, which may be of interest for search:

Vehicle superstructures characterised by the material thereof, characterised by combining metal and synthetic material, preformed metal and synthetic material elements being joined together	B62D 29/005

B29C 65/66

by liberation of internal stresses, e.g. shrinking of one of the parts to be joined

References

Informative references

Attention is drawn to the following places, which may be of interest for search:

Shaping by liberation of internal stresses	B29C 61/00

B29C 65/74

by welding and severing {, or by joining and severing, the severing being performed in the area to be joined, next to the area to be joined, in the joint area or next to the joint area}

References

Informative references

Attention is drawn to the following places, which may be of interest for search:

Medical tube couplings for connecting tubes having sealed ends by cutting and welding	A61M 39/146

Special rules of classification

When classifying in this group, joining techniques are additionally classified in the relevant groups, e.g. in B29C 65/02 and subgroups.

B29C 65/7433

{the tool being a wire}

References

Informative references

Attention is drawn to the following places, which may be of interest for search:

Severing with heated wires	B26F 3/12

B29C 65/7435

{the tool being a roller}

References

Informative references

Attention is drawn to the following places, which may be of interest for search:

Severing with heated rollers or discs	B26F 3/10

B29C 65/7441

{for making welds and cuts of other than simple rectilinear form}

References

Informative references

Attention is drawn to the following places, which may be of interest for search:

Closing semi-rigid or rigid containers or receptacles after filling, by feeding web material to securing means and securing by heat-sealing	B65B 7/164

B29C 65/7443

{by means of ultrasonic vibrations}

References

Informative references

Attention is drawn to the following places, which may be of interest for search:

Details of apparatus for cutting, cutting-out, stamping-out, punching, perforating, or severing by vibrating, e.g. ultrasonically	B26D 7/086

B29C 65/7457

{comprising a perforating tool}

References

Informative references

Attention is drawn to the following places, which may be of interest for search:

Perforating strips of completed packages	B65B 61/007

B29C 65/7461

{for making welds and cuts of other than simple rectilinear form}

References

Informative references

Attention is drawn to the following places, which may be of interest for search:

Closing semi-rigid or rigid containers or receptacles after filling, by feeding web material to securing means and securing by heat-sealing	B65B 7/164

B29C 65/76

Making non-permanent or releasable joints

References

Informative references

Attention is drawn to the following places, which may be of interest for search:

Layered products permitting easy separation	B32B 7/06

B29C 65/7841

{Holding or clamping means for handling purposes (clamping means for the purpose of applying pressure on the parts to be joined, in the area to be joined B29C 66/81; work holders in general B25B; devices for holding or positioning work for welding metal B23K 37/04)}

References

Informative references

Attention is drawn to the following places, which may be of interest for search:

Clamps for holding or positioning work for welding metal	B23K 37/0435
Jigs for positioning work for welding metal	B23K 37/0443
Clamps for plates in general	B25B 5/145
Clamps for pipes in general	B25B 5/147

B29C 65/7861

{In-line machines, i.e. feeding, joining and discharging are in one production line (B29C 65/7879, B29C 65/7888 take precedence)}

Definition statement

This place covers:

Example 1, from

DE4336274:

FIG.1

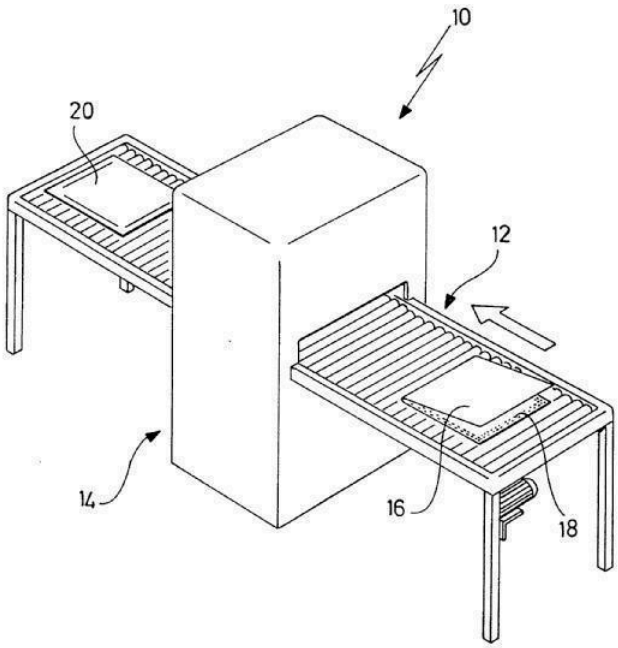

B29C 65/7864

{using a feeding table which moves to and fro (oscillating around an axis B29C 65/7876)}

Definition statement

This place covers:

Example 1, from

JP11240025:

【図1】

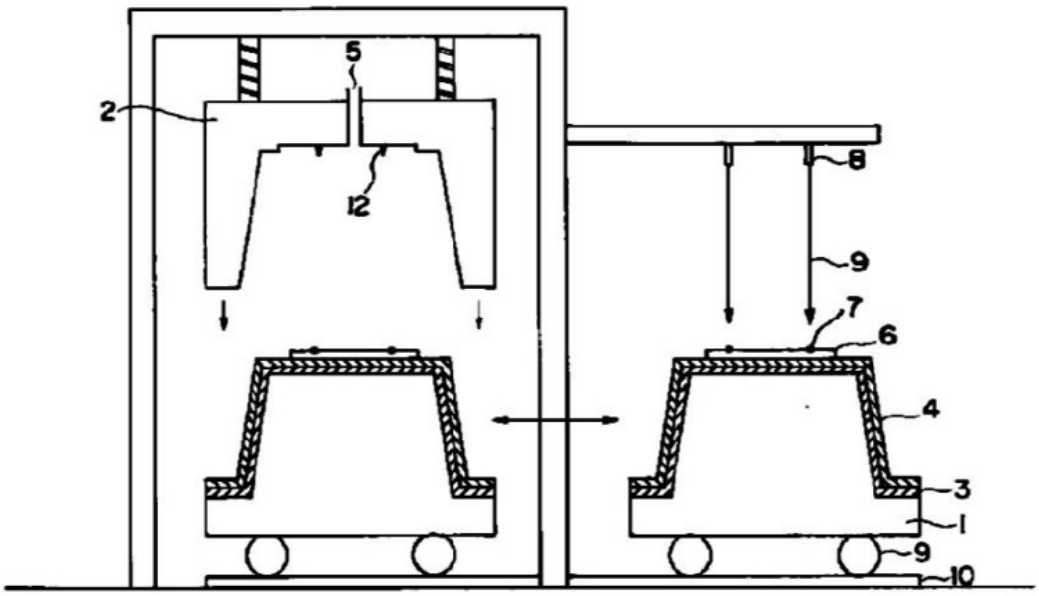

B29C 65/7867

{using carriers, provided with holding means, said carriers moving in a closed path}

Definition statement

This place covers:

Example 1, from

EP0483569:

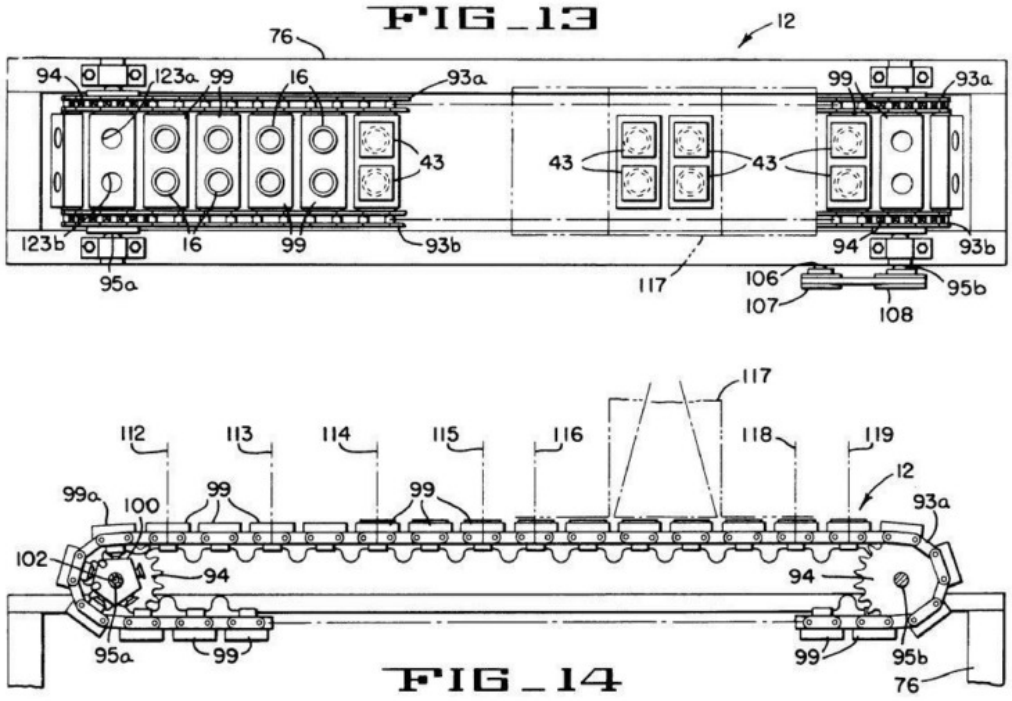

Example 2, from

DE1058426:

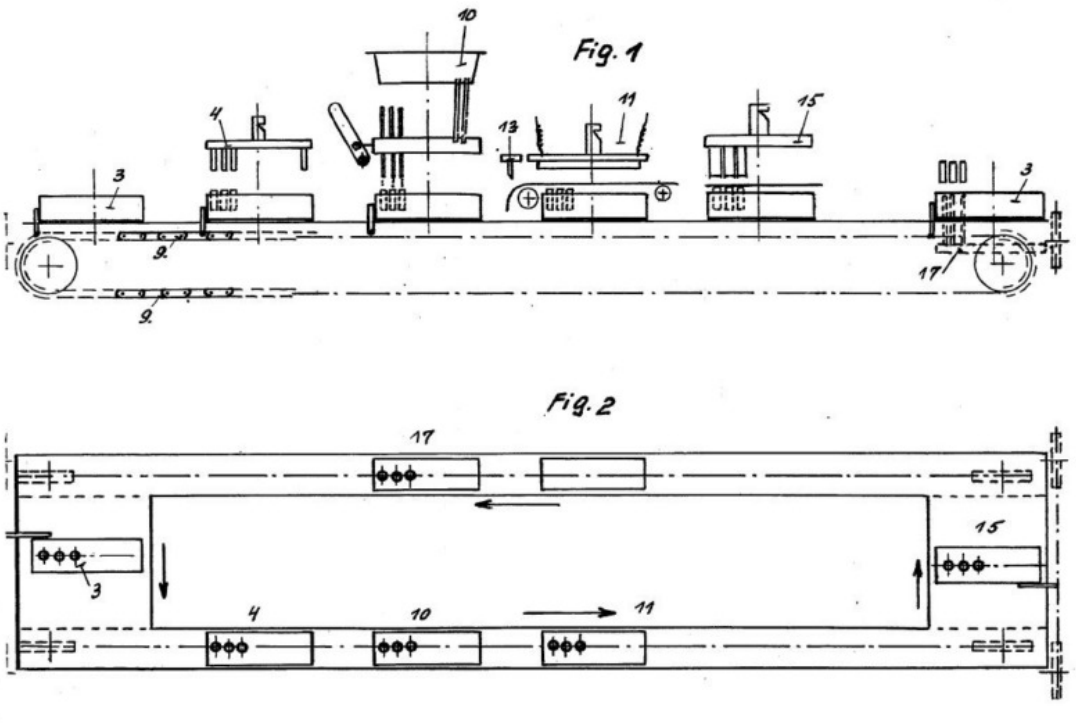

B29C 65/787

{using conveyor belts or conveyor chains (B29C 66/83421, B29C 66/83521, B29C 66/83531 take precedence)}

Definition statement

This place covers:

Example 1, from

DE3807164:

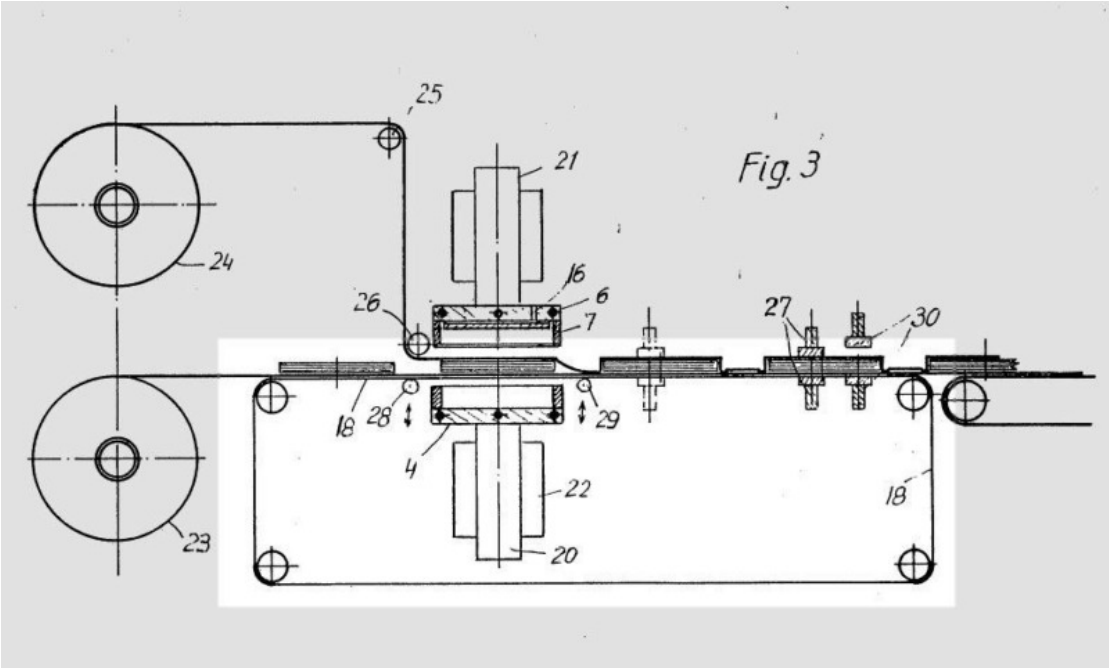

B29C 65/7879

{said parts to be joined moving in a closed path, e.g. a rectangular path (B29C 65/7888 takes precedence)}

Definition statement

This place covers:

Example 1, from

DE102009037662:

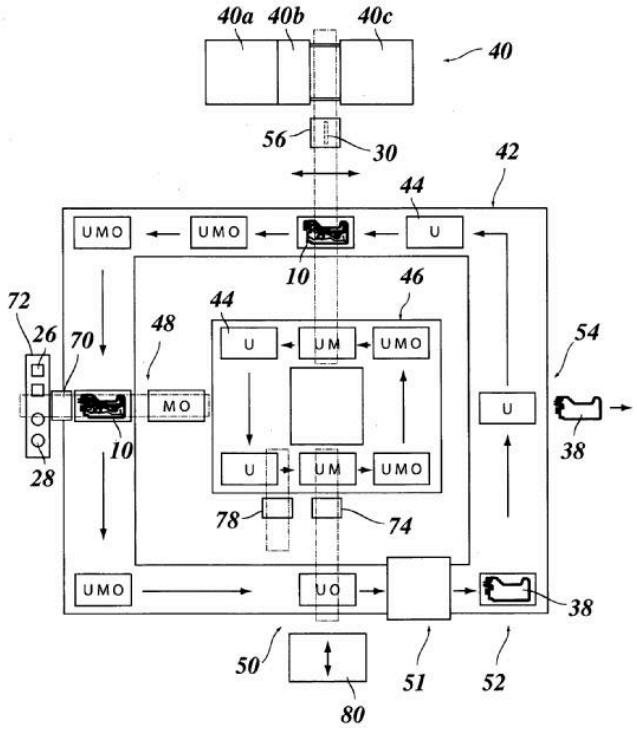

B29C 65/7882

{said parts to be joined moving in a circular path}

Definition statement

This place covers:

Example 1, from

CH537834:

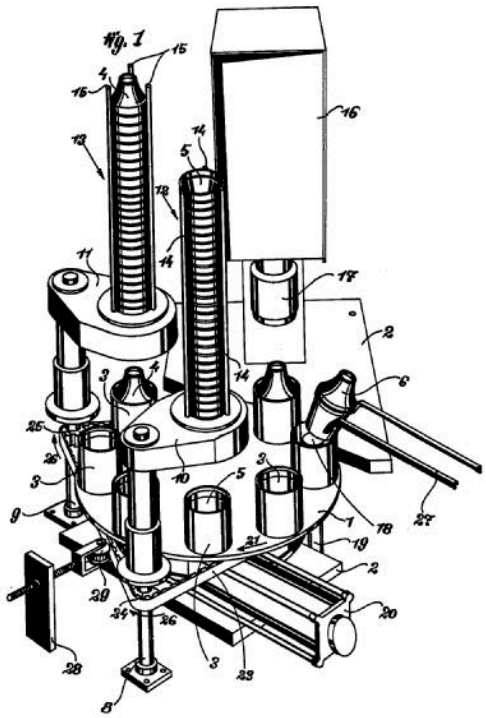

Example 2, from

DE1143630:

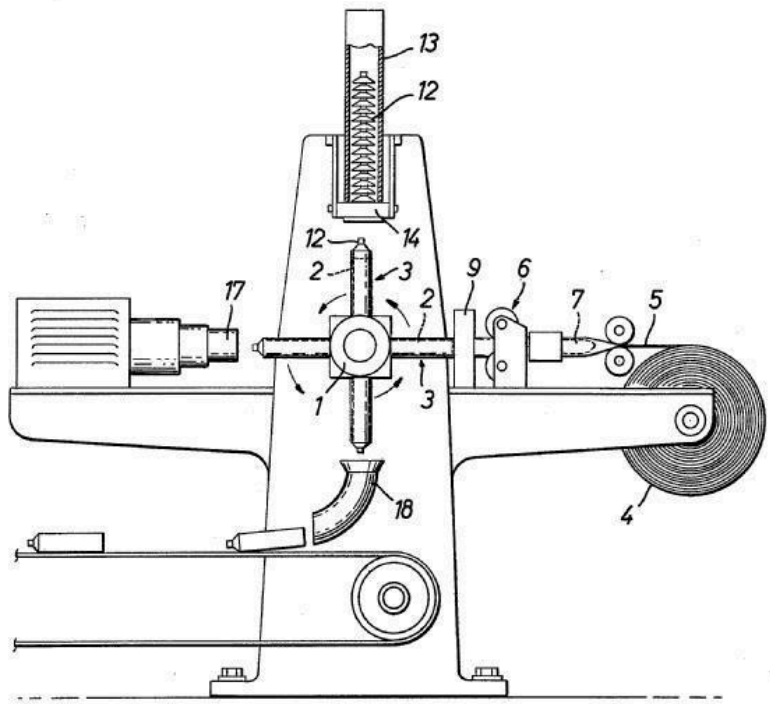

B29C 65/7885

{Rotary turret joining machines, i.e. having several joining tools moving around an axis}

Definition statement

This place covers:

Example 1, from

FR2167559:

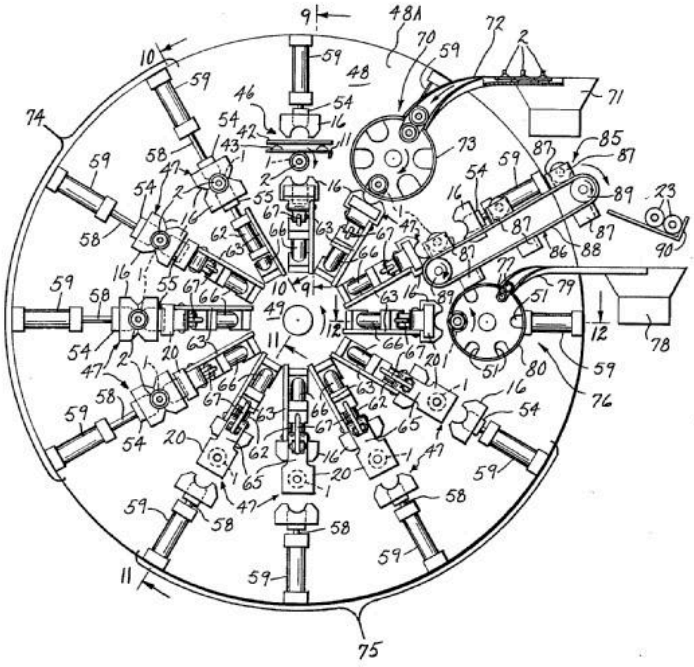

B29C 65/8207

{by mechanical methods}

References

Informative references

Attention is drawn to the following places, which may be of interest for search:

Investigating strength properties of welds by application of mechanical stress	G01N 2203/0296

B29C 65/8215

{Tensile tests}

References

Informative references

Attention is drawn to the following places, which may be of interest for search:

Investigating strength properties of solid materials by applying steady tensile forces	G01N 3/08

B29C 65/8223

{Peel tests}

References

Informative references

Attention is drawn to the following places, which may be of interest for search:

Investigating strength properties of solid materials by applying steady shearing forces	G01N 3/24

B29C 65/823

{Bend tests}

References

Informative references

Attention is drawn to the following places, which may be of interest for search:

Investigating strength properties of solid materials by applying steady bending forces	G01N 3/20

B29C 65/8238

{Impact tests}

References

Informative references

Attention is drawn to the following places, which may be of interest for search:

Investigating strength properties of solid materials by applying a single impulsive force	G01N 3/30

B29C 65/8246

{Pressure tests, e.g. hydrostatic pressure tests}

References

Informative references

Attention is drawn to the following places, which may be of interest for search:

Investigating fluid-tightness of structures	G01M 3/00

B29C 65/8253

{by the use of waves or particle radiation, e.g. visual examination, scanning electron microscopy, or X-rays (B29C 65/8292 takes precedence)}

References

Informative references

Attention is drawn to the following places, which may be of interest for search:

Investigating materials by the use of wave or particle radiation	G01N 21/00 - G01N 23/00

B29C 65/8261

{by the use of thermal means}

References

Informative references

Attention is drawn to the following places, which may be of interest for search:

Investigating materials by the use of thermal means	G01N 25/00

B29C 65/8269

{by the use of electric or magnetic means}

References

Informative references

Attention is drawn to the following places, which may be of interest for search:

Investigating materials by the use of electric or magnetic means	G01N 27/00

B29C 65/8292

{by the use of ultrasonic, sonic or infrasonic waves}

References

Informative references

Attention is drawn to the following places, which may be of interest for search:

Investigating materials by the use of ultrasonic, sonic or infrasonic waves	G01N 29/00

B29C 66/00

{General aspects of processes or apparatus for joining preformed parts (means for handling the parts to be joined B29C 65/78; testing the joint B29C 65/82)}

Definition statement

This place covers:

General aspects dealing with the joint area (cf. B29C 66/01 and subgroups)), e.g.:

pre-treatments (cf. B29C 66/02 and subgroups);

post-treatments (cf. B29C 66/03 and subgroups);

particular design of joint configurations (cf. B29C 66/05 and subgroups);

General aspects of joining substantially flat articles (cf. B29C 66/40 and subgroups);

General aspects of joining tubular articles; General aspects of joining hollow-preforms to form hollow articles (cf. B29C 66/50 and subgroups);

Specific composition, properties or structure of the material to be joined (cf. B29C 66/70 and subgroups);

General aspects of machine constructions (cf. B29C 66/80 and subgroups), e.g.:

constructional aspects of the welding jaw (cf. B29C 66/81 and subgroups);

transmission or actuating mechanisms for joining tools (cf. B29C 66/82 and subgroups);

specific movements of the joining tools (cf. B29C 66/83 and subgroups);

Measuring or controlling the joining process (cf. B29C 66/90 and subgroups).

References

Limiting references

This place does not cover:

Joining methods; means for handling the parts to be joined; testing the joint	B29C 65/002 - B29C 65/76; B29C 65/78; B29C 65/82

Special rules of classification

Patent literature (e.g. patent applications, patent specifications):

Claims / claimed subject-matter:

Independent claims: compulsory invention information;

Dependent claims: at least compulsory additional information (or compulsory invention information if appropriate).

Figures - depicted subject-matter: at least compulsory additional information (or compulsory invention information if appropriate).

Description - described subject-matter: at least desirable additional (or compulsory invention information if appropriate).

Tables: at least compulsory additional information.

Non-patent literature (e.g. scientific non-patent publications):

Figures - depicted subject-matter: compulsory invention information;

Abstract: compulsory invention information;

Description: at least desirable additional information (or compulsory invention information if appropriate).

N.B.: in this main group, it is compulsory that any disclosed aspect relating to the invention is identified by the corresponding classification code(s).

B29C 66/001

{Joining in special atmospheres}

References

Informative references

Attention is drawn to the following places, which may be of interest for search:

Closing containers in chambers maintained under vacuum or super-atmospheric pressure or containing a special atmosphere, e.g. of inert gas	B65B 31/02

B29C 66/0016

{Liquid environments, i.e. the parts to be joined being submerged in a liquid}

Definition statement

This place covers:

Example 1, from

JP7080941:

【図２】

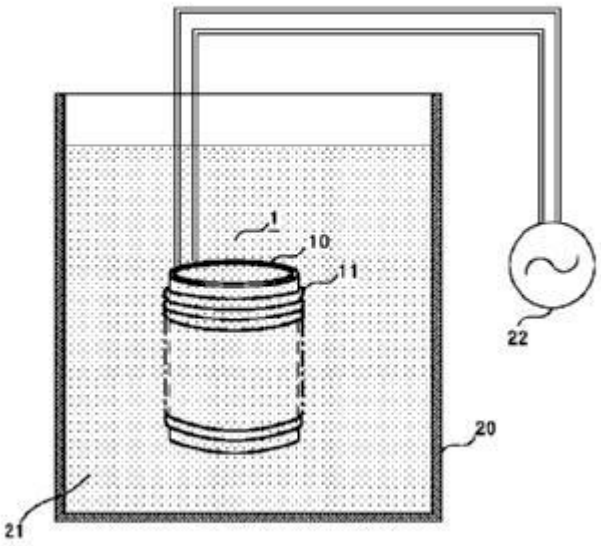

B29C 66/0044

{using a separating sheet, e.g. fixed on the joining tool}

Definition statement

This place covers:

Example 1, from

WO2010129569:

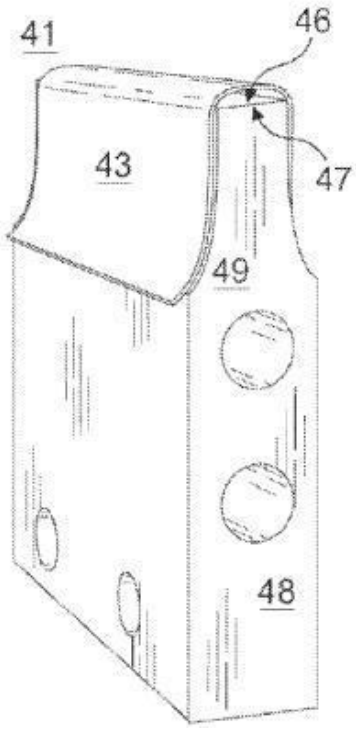

B29C 66/00441

{movable, e.g. mounted on reels}

Definition statement

This place covers:

Example 1, from

WO2008005882:

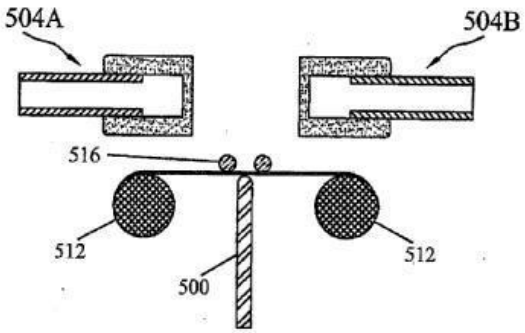

Figure 5A

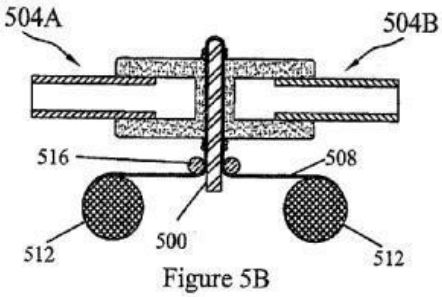

Figure 5B

B29C 66/02

{Preparation of the material, in the area to be joined, prior to joining or welding (B29C 66/32 takes precedence)}

References

Informative references

Attention is drawn to the following places, which may be of interest for search:

Conditioning or physical treatment of the material to be shaped, in general	B29B 13/00
Adhesive processes in general involving pretreatment of the surfaces to be joined	C09J 5/02

B29C 66/02242

{Perforating or boring}

References

Informative references

Attention is drawn to the following places, which may be of interest for search:

Perforating material prior to packaging	B65B 61/02

B29C 66/02245

{Abrading, e.g. grinding, sanding, sandblasting or scraping}

References

Informative references

Attention is drawn to the following places, which may be of interest for search:

Conditioning or physical treatment of the material to be shaped, by grinding, in general	B29B 13/10

B29C 66/0242

{Heating, or preheating, e.g. drying (B29C 66/3464 takes precedence)}

References

Informative references

Attention is drawn to the following places, which may be of interest for search:

Conditioning of the material to be shaped, by heating, in general	B29B 13/02
Conditioning of the material to be shaped, by drying, in general	B29B 13/04

B29C 66/0244

{Cooling}

References

Informative references

Attention is drawn to the following places, which may be of interest for search:

Conditioning of the material to be shaped, by cooling, in general	B29B 13/04

B29C 66/026

{Chemical pre-treatments (B29C 66/028 takes precedence)}

References

Informative references

Attention is drawn to the following places, which may be of interest for search:

Chemical treatment of shaped articles made of macromolecular substances	C08J 7/00

B29C 66/028

{Non-mechanical surface pre-treatments, i.e. by flame treatment, electric discharge treatment, plasma treatment, wave energy or particle radiation (B29C 65/14 takes precedence; non-mechanical surface treatment of plastics in general B29C 59/08 - B29C 59/16)}

References

Informative references

Attention is drawn to the following places, which may be of interest for search:

Conditioning or physical treatment of the material to be shaped, by using wave energy or particle radiation, in general	B29B 13/08
Chemical modification of shaped articles made of macromolecular substances by wave energy or particle radiation treatment	C08J 7/123

B29C 66/03

{After-treatments in the joint area (B29C 66/3262 takes precedence)}

References

Informative references

Attention is drawn to the following places, which may be of interest for search:

After-treatment, in general, of articles without altering their shape	B29C 71/00
After-treatment, in general, of articles without altering their shape, by wave energy or particle radiation	B29C 71/04

B29C 66/03241

{Flattening}

Definition statement

This place covers:

Example 1, from

USRE38248E:

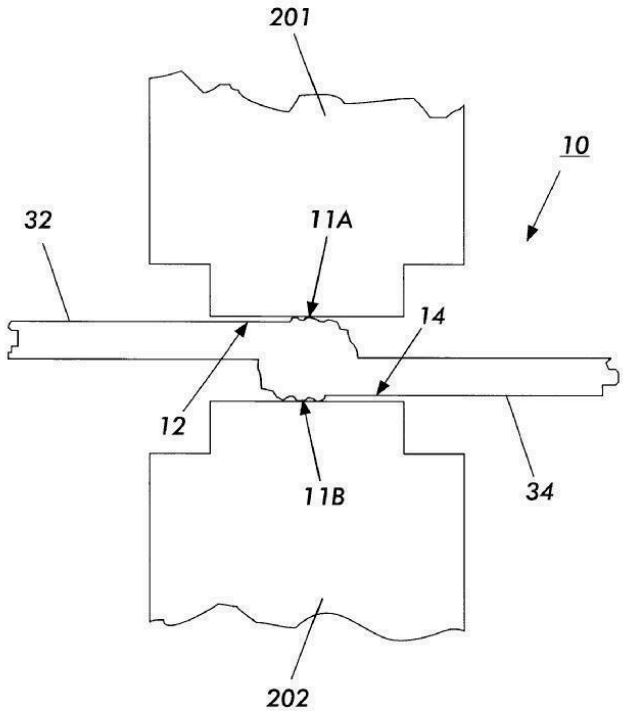

Glossary of terms

In this place, the following terms or expressions are used with the meaning indicated:

Flattening	e.g. flat ironing or smoothing an e.g. overlap joint

B29C 66/03242

{of sheets being positioned in abutment, e.g. after folding open of an overlap joint}

Definition statement

This place covers:

Example 1, from

EP1491105:

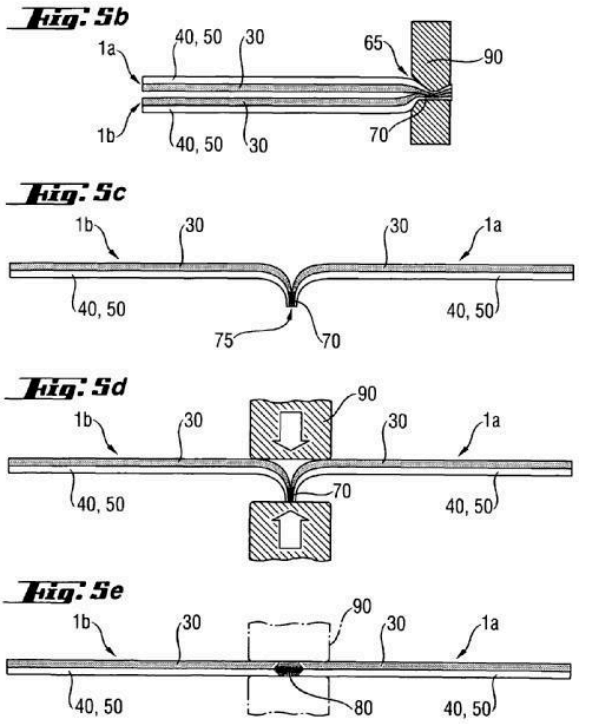

B29C 66/034

{Thermal after-treatments}

References

Informative references

Attention is drawn to the following places, which may be of interest for search:

Thermal after-treament, in general, of articles without altering their shape	B29C 71/02

B29C 66/0342

{Cooling, e.g. transporting through welding and cooling zone}

References

Informative references

Attention is drawn to the following places, which may be of interest for search:

Cooling	B29C 35/16
Cooling, or cooling and pressing, package closures after heat-sealing	B65B 51/32

B29C 66/0384

{the coating material being in tape, strip or band form (joining using adhesive tapes covering both elements to be joined B29C 65/5042)}

Definition statement

This place covers:

Example 1, from

US2010151176:

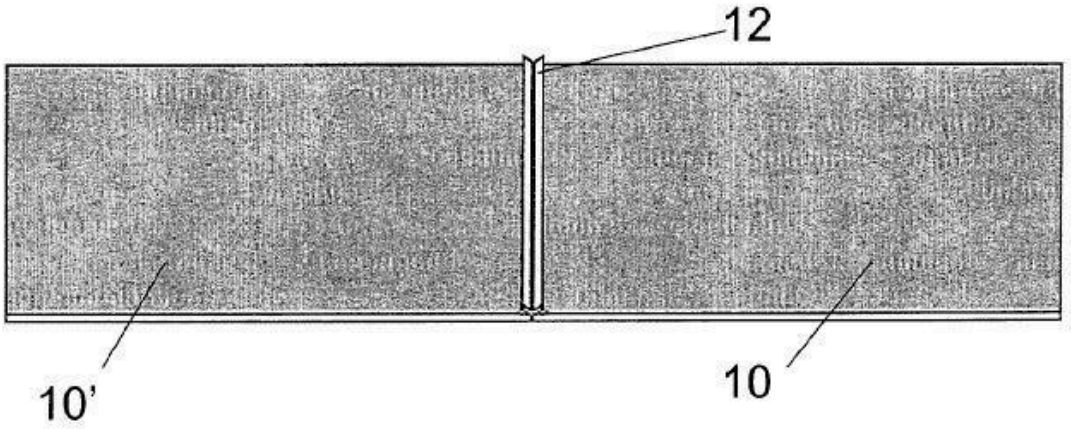

FIG. 3

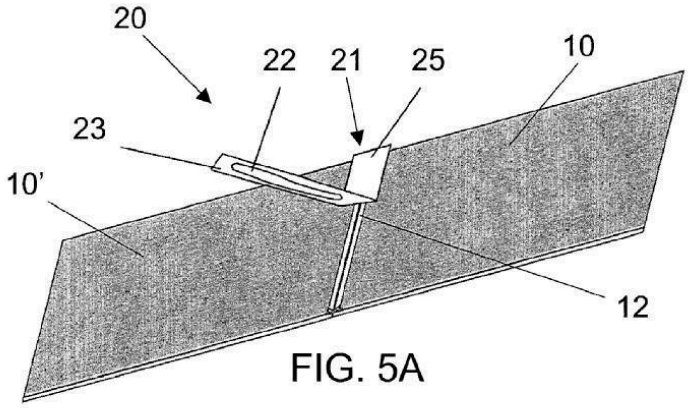

FIG. 5A

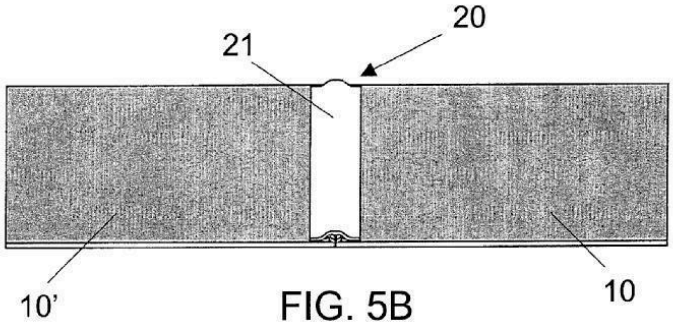

FIG. 5B

B29C 66/05

{Particular design of joint configurations}

Special rules of classification

In this group the possible supplementary joining material (e.g. adhesive, adhesive tapes or extra joining elements, e.g. extra riveting elements) is not taken into account for the joint configuration. The use of supplementary joining material (e.g. adhesive, adhesive tapes or extra joining elements, e.g. extra riveting elements) has to be additionally classified as such (e.g. in B29C 65/48 and subgroups, B29C 65/50 and subgroups, B29C 65/562 and subgroups or B29C 65/601 and subgroups).

B29C 66/10

{particular design of the joint cross-sections}

Definition statement

This place covers:

Example 1, B29C 66/112 (single lapped joint) and B29C 66/131 (single flanged joint), from

JP2009202894:

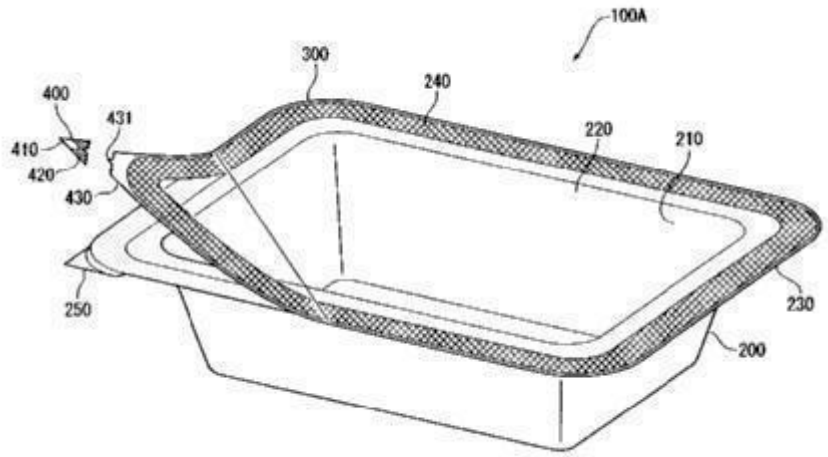

Example 2, B29C 66/135 (single hemmed joint) and B29C 66/112 (single lapped joint), from

EP0721745:

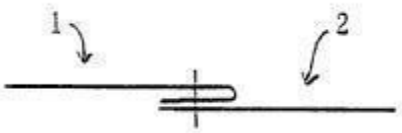

Example 3, B29C 66/135 (single hemmed joint) and B29C 66/112 (single lapped joint), from

JP8118499:

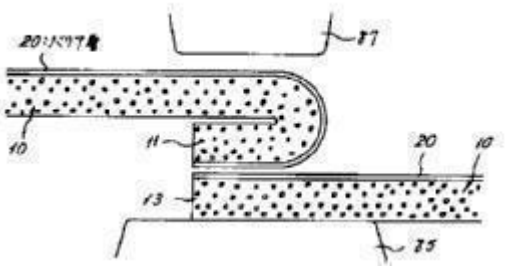

B29C 66/11

{Joint cross-sections comprising a single joint-segment, i.e. one of the parts to be joined comprising a single joint-segment in the joint cross-section (B29C 66/12 and subgroups take precedence)}

Definition statement

This place covers:

Example 2, B29C 66/112 (single lapped joint) and B29C 66/114 (single butt joint), from

NL1028543C:

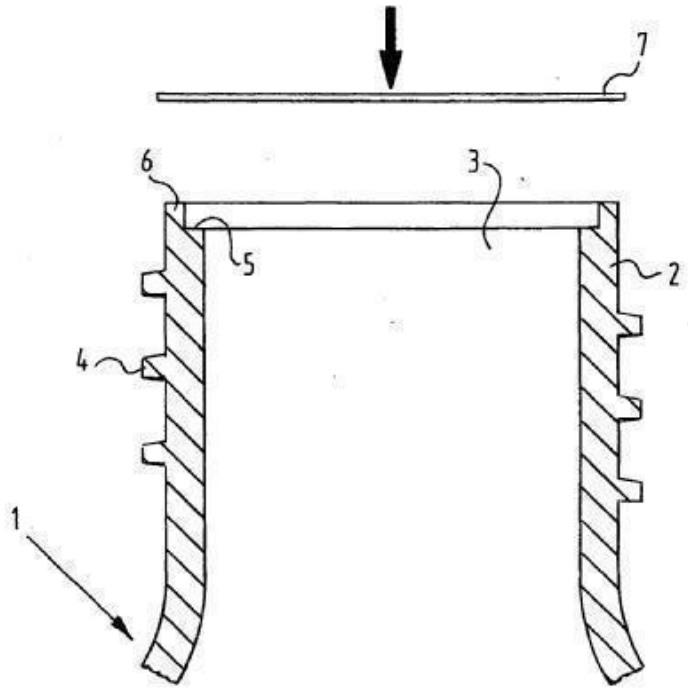

Example 3, B29C 66/116 (single bevelled joint) and B29C 66/112 (single lapped joint), from

US2009307995:

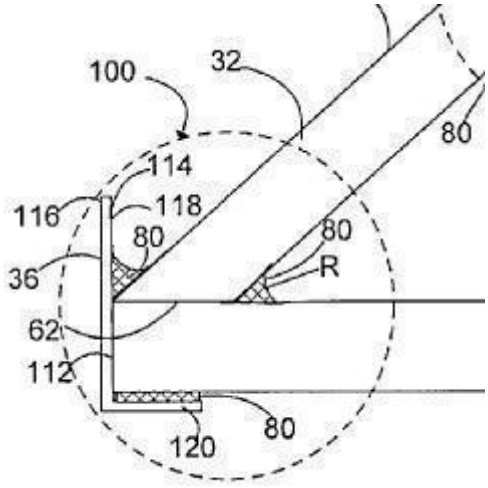

B29C 66/1122

{Single lap to lap joints, i.e. overlap joints (B29C 66/45, B29C 66/472, B29C 66/52272 take precedence)}

Definition statement

This place covers:

Example 1, from

JP2007112127:

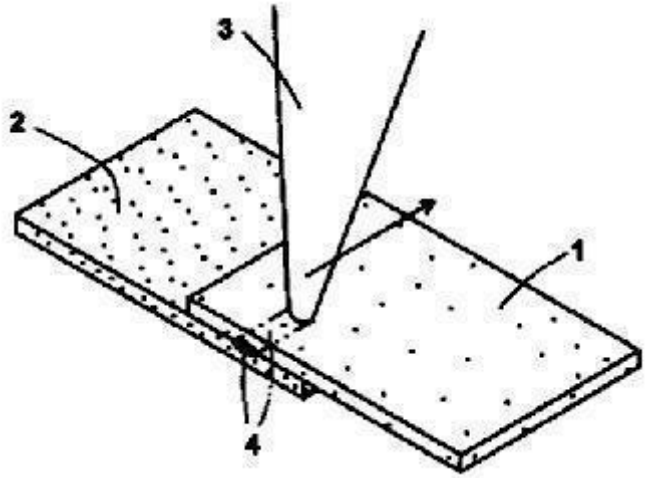

Example 2, from

DE19813387

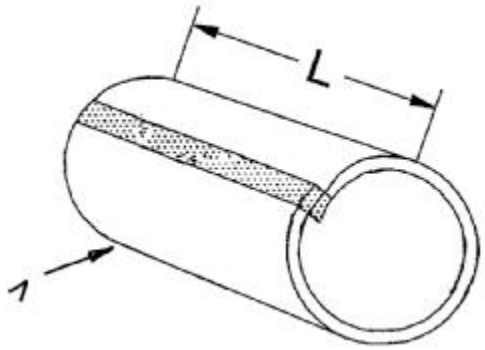

References

Informative references

Attention is drawn to the following places, which may be of interest for search:

Overlap laser welding of metal parts	B23K 26/244

B29C 66/1142

{Single butt to butt joints}

Definition statement

This place covers:

Example 1,

from

JP2007296857:

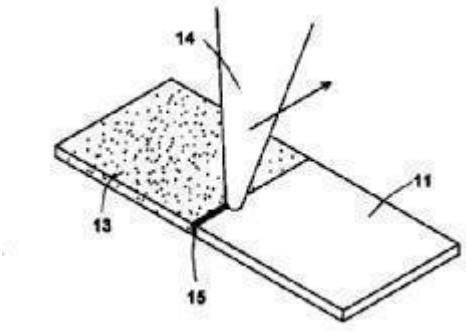

Example 2, from

JP2011008277:

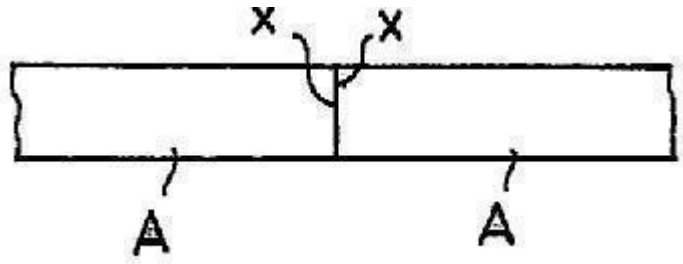

Example 3, from

DE19813387:

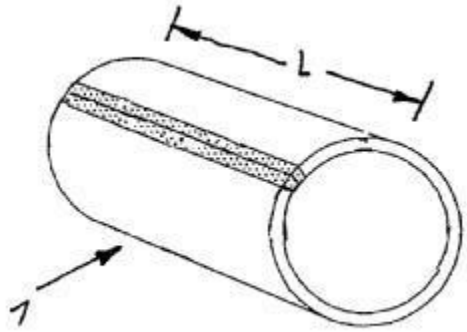

References

Informative references

Attention is drawn to the following places, which may be of interest for search:

Joining sheets, plates or panels in abutting relationship, relating to finishing work on buildings	E04F 2201/01

B29C 66/1162

{Single bevel to bevel joints, e.g. mitre joints}

Definition statement

This place covers:

Example 1, from

XP000831529:

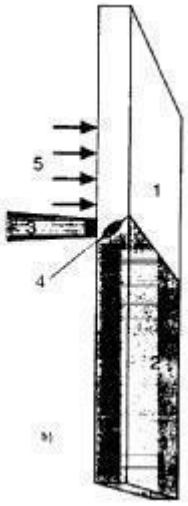

Example 2, from

XP000831529:

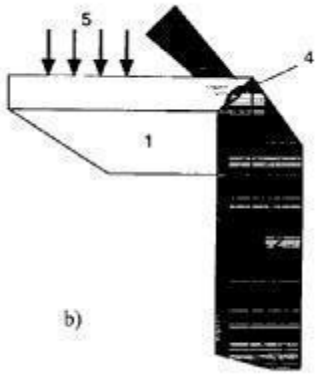

References

Informative references

Attention is drawn to the following places, which may be of interest for search:

Welded mitre corner joints for windows, doors, or the like frames or wings	E06B 3/9608

B29C 66/118

{Single monotone curved joints}

Definition statement

This place covers:

Example 1, from

JP2011008277:

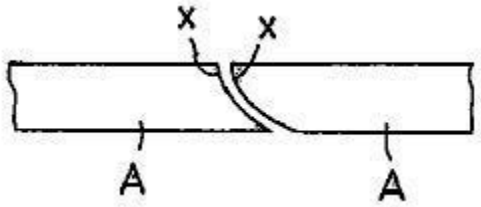

B29C 66/1182

{the joint being C-shaped}

Definition statement

This place covers:

Example 1, from

JP2011008277:

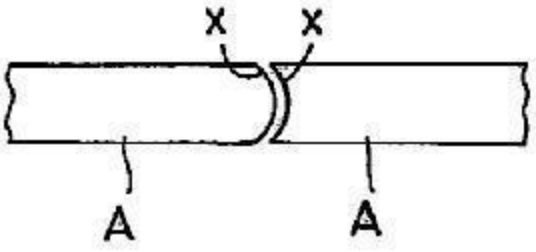

B29C 66/122

{Joint cross-sections combining only two joint-segments, i.e. one of the parts to be joined comprising only two joint-segments in the joint cross-section (B29C 66/124 takes precedence)}

Definition statement

This place covers:

Example 1, B29C 66/1224 (comprising at least a butt joint-segment) and B29C 66/1226 (comprising at least one bevelled joint-segment), from

JP2011008277:

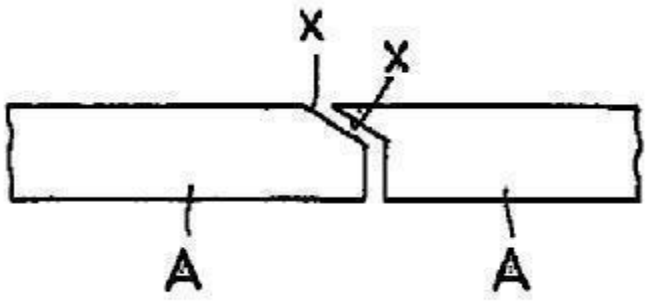

Example 2, B29C 66/1224 (comprising at least a butt joint-segment) and B29C 66/1222 (comprising at least a lapped joint-segment), from

DE19510493:

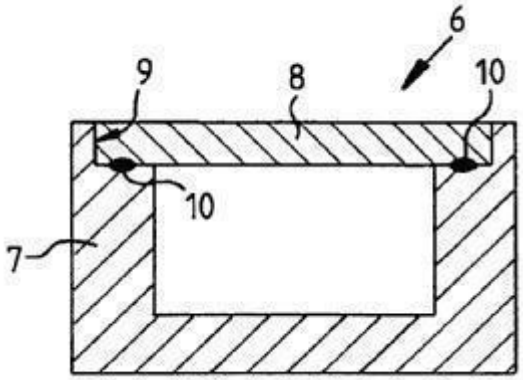

Example 3, B29C 66/1224 (comprising at least a butt joint-segment) and B29C 66/1222 (comprising at least a lapped joint-segment), from

DE19510493:

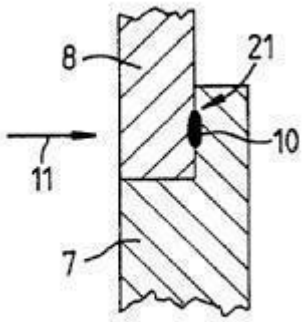

Fig.7

Example 4, B29C 66/1222 (comprising at least a lapped joint-segment) and B29C 66/1226 (comprising at least one bevelled joint-segment), from

WO2005095828:

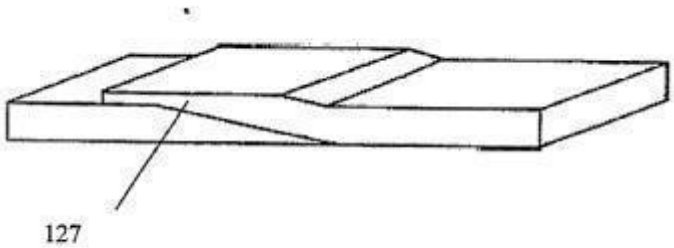

B29C 66/12261

{the two joint-segments being bevelled, e.g. the two joint-segments forming a V}

Definition statement

This place covers:

Example 1, from

JP2011008277:

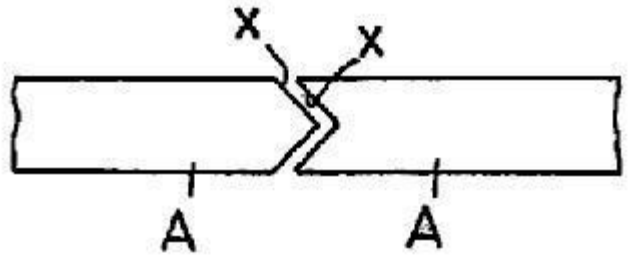

B29C 66/1228

{comprising at least one monotone curved joint-segment}

Definition statement

This place covers:

Example 1, from

EP2402145:

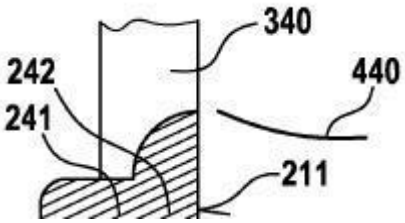

B29C 66/124

{Tongue and groove joints}

Definition statement

This place covers:

Example 1, from

DE19510493:

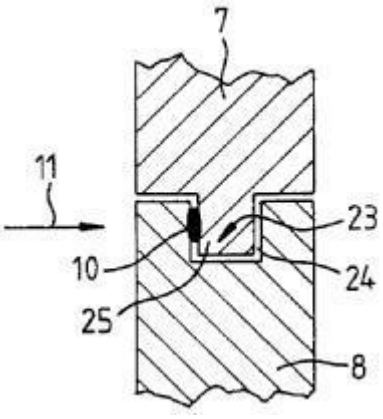

B29C 66/12421

{Teardrop-like, waterdrop-like or mushroom-like interlocking undercuts}

Definition statement

This place covers:

Example 1, from

DE2645771:

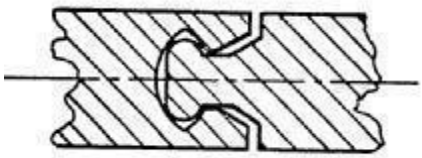

Example 2, from

FR2575804:

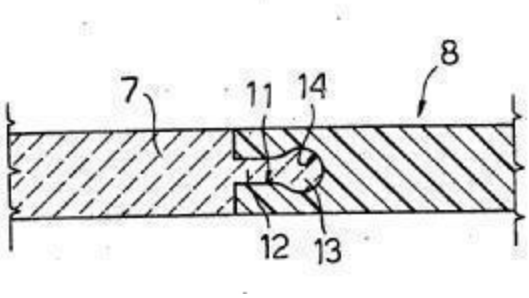

Example 3, from

US3695340:

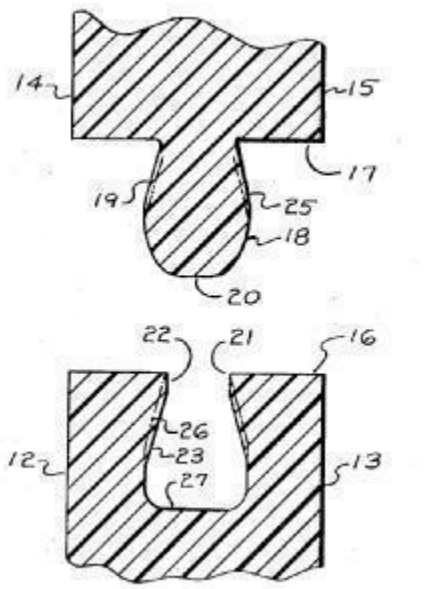

B29C 66/12423

{Dovetailed interlocking undercuts}

Definition statement

This place covers:

Example 1, from

JP55051527:

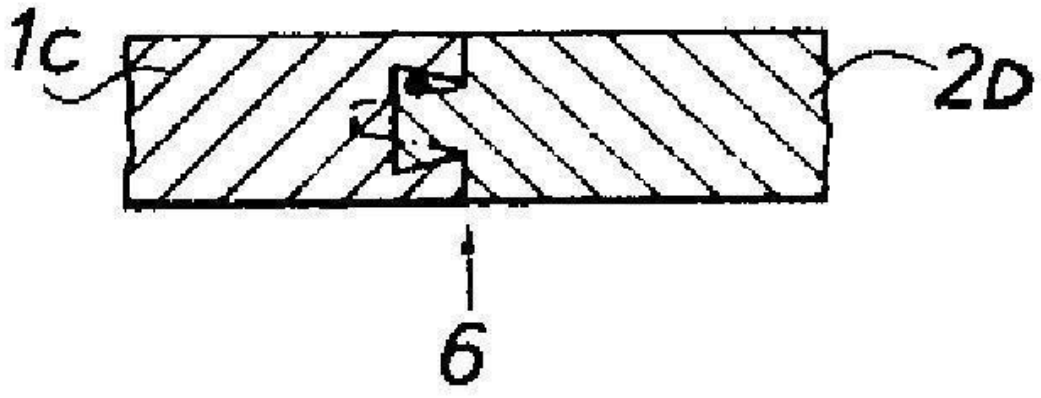

Example 2, from

US2005067084:

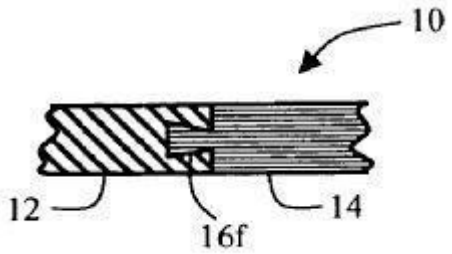

B29C 66/12441

{being a single wall}

Definition statement

This place covers:

Example 1, from

US2005284559:

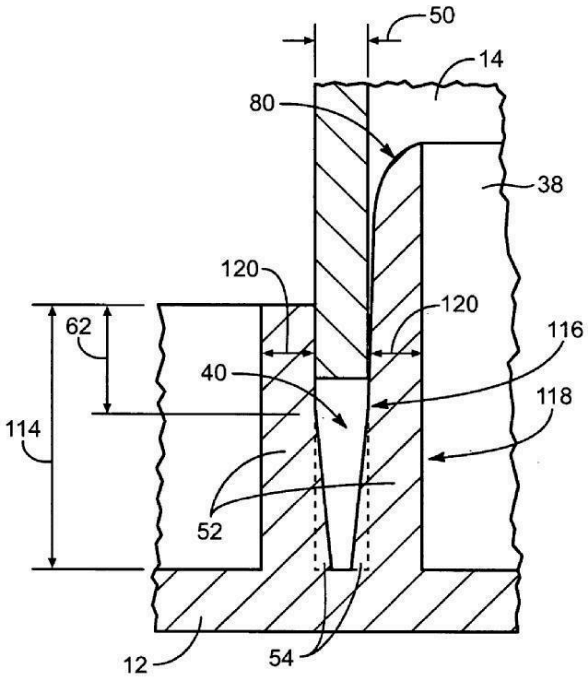

B29C 66/12443

{having the tongue substantially in the middle}

Definition statement

This place covers:

Example 1, from

JP11291347:

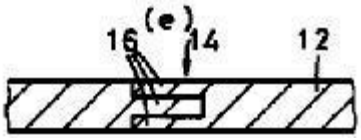

B29C 66/12445

{having the tongue on the side}

Definition statement

This place covers:

Example 1, from

JP2977035B1:

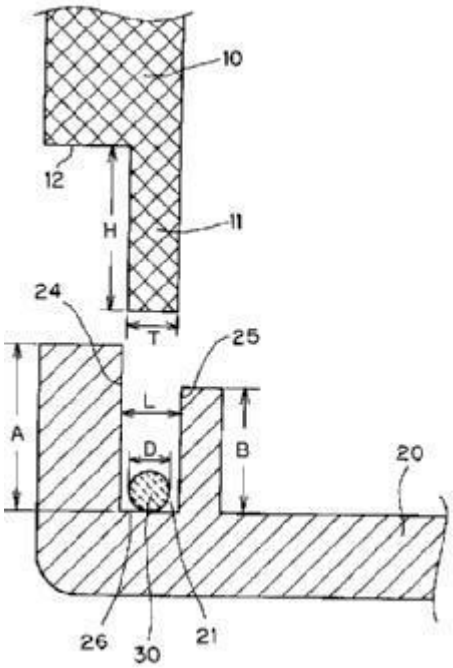

B29C 66/12449

{being asymmetric (B29C 66/12445 takes precedence)}

Definition statement

This place covers:

Example 1, from

GB2314597:

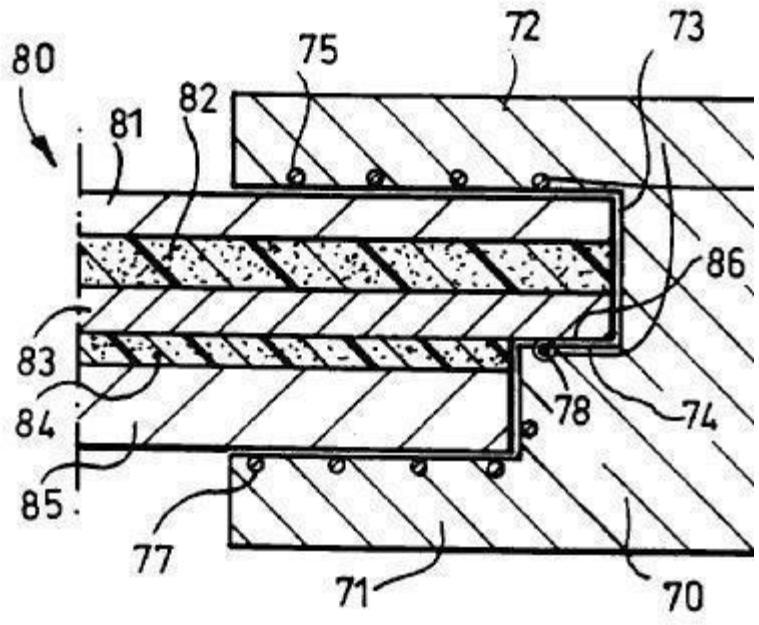

Example 2, from

GB2314597:

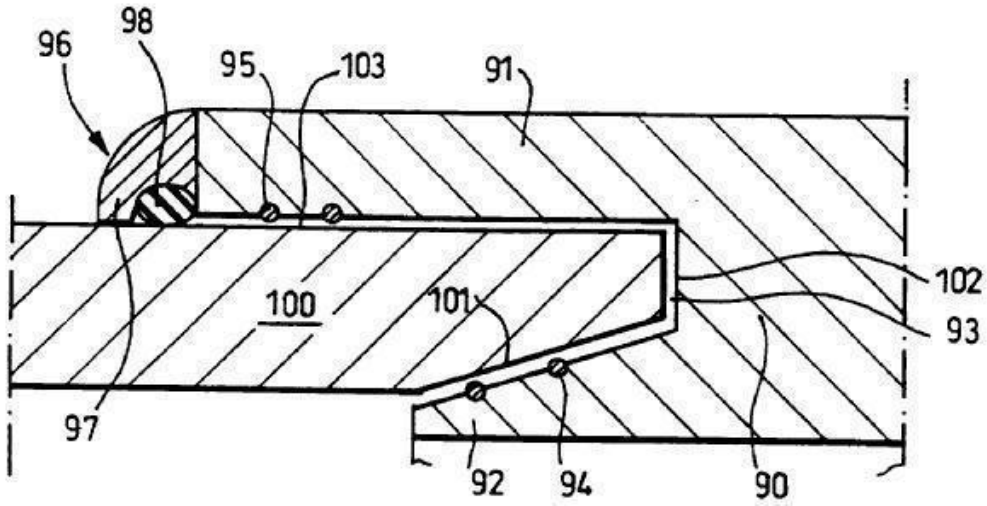

B29C 66/12461

{being rounded, i.e. U-shaped or C-shaped}

Definition statement

This place covers:

Example 1, from

JP7125074:

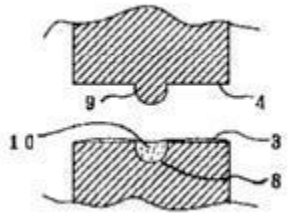

B29C 66/12463

{being tapered}

Definition statement

This place covers:

Example 1, from

US2005284559:

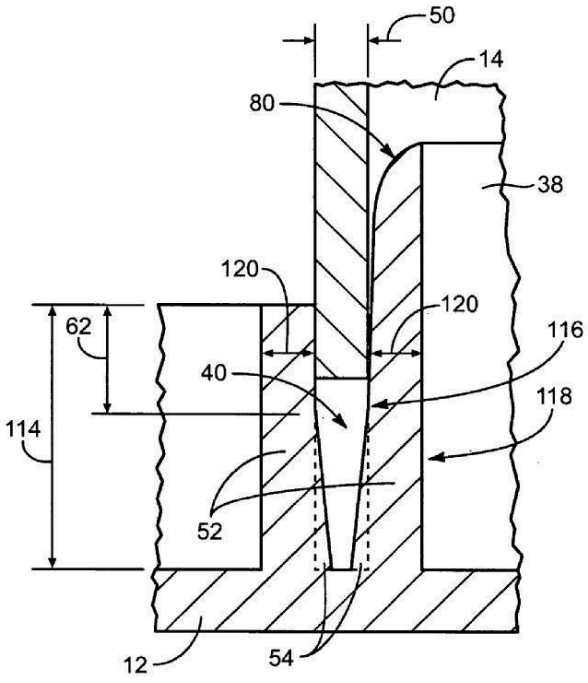

B29C 66/12464

{being V-shaped}

Definition statement

This place covers:

Example 1, from

DE10109594:

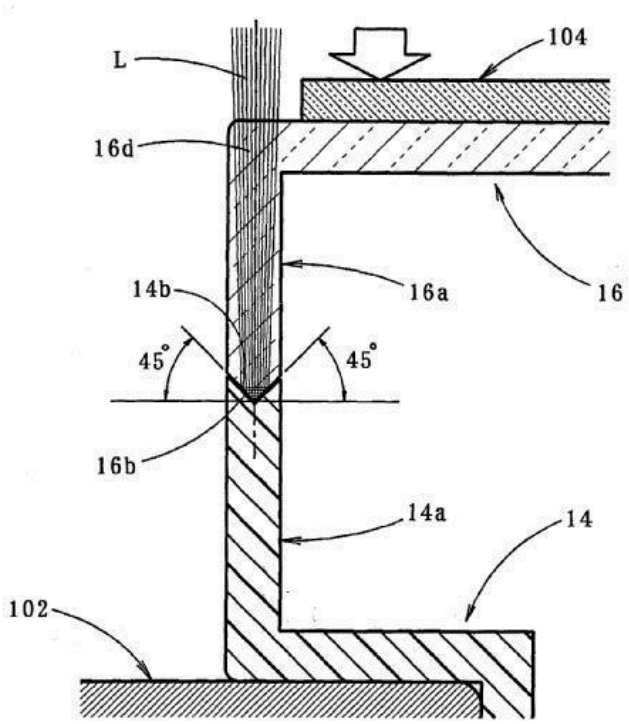

B29C 66/12469

{being asymmetric}

Definition statement

This place covers:

Example 1, from

GB2314597:

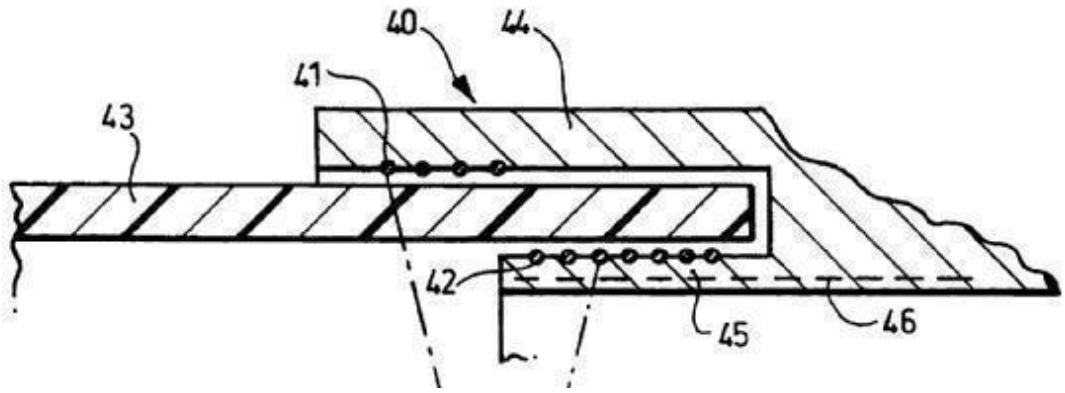

Example 2, from

GB2314597:

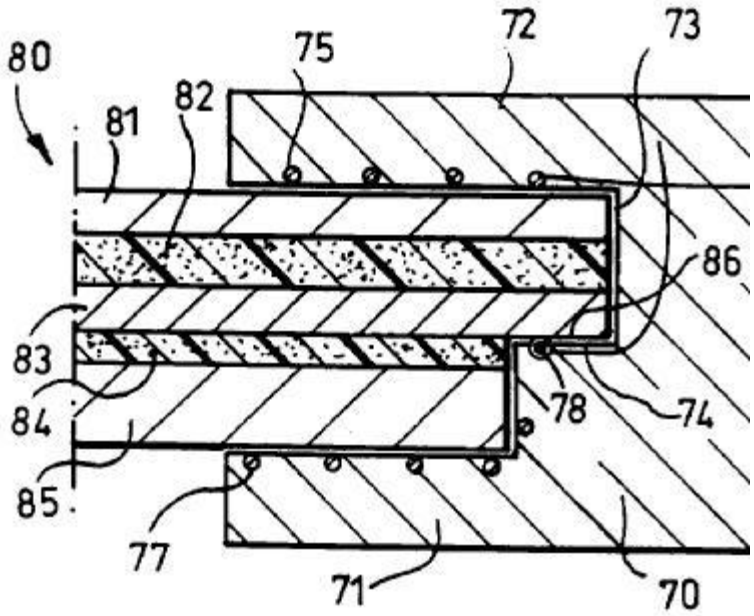

Example 3, from

GB2314597:

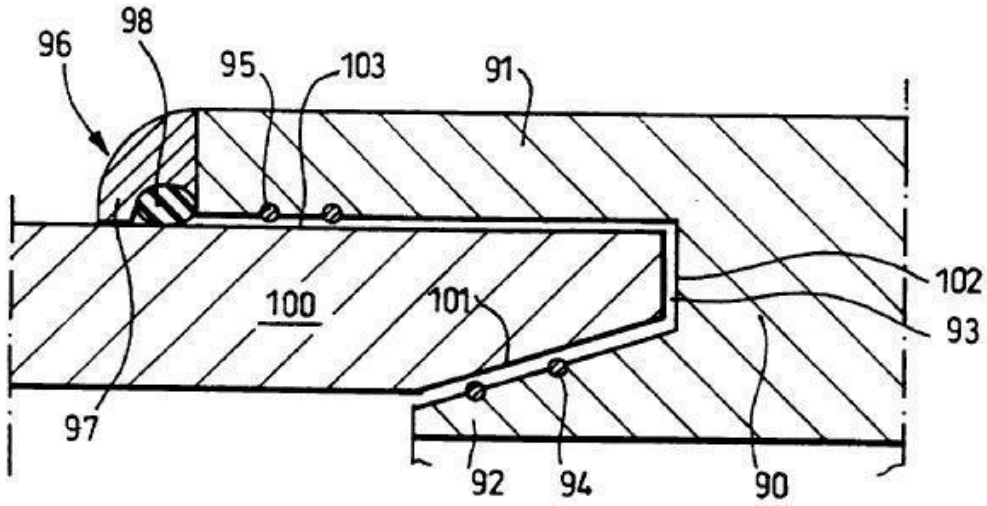

B29C 66/1248

{Interpenetrating groove joints (interpenetrating fingered joints B29C 66/139)}

Definition statement

This place covers:

Example 1, from

US4252849:

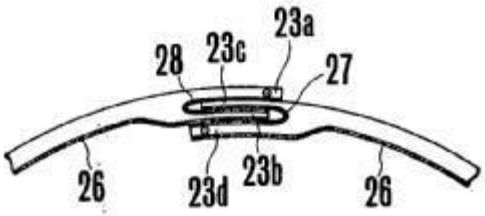

B29C 66/126

{Tenon and mortise joints (tenons and mortises for positioning purposes B29C 65/7814)}

Definition statement

This place covers:

Example 1, from

JP3254332:

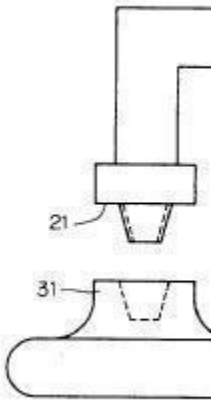

Example 2, from

FR2714123:

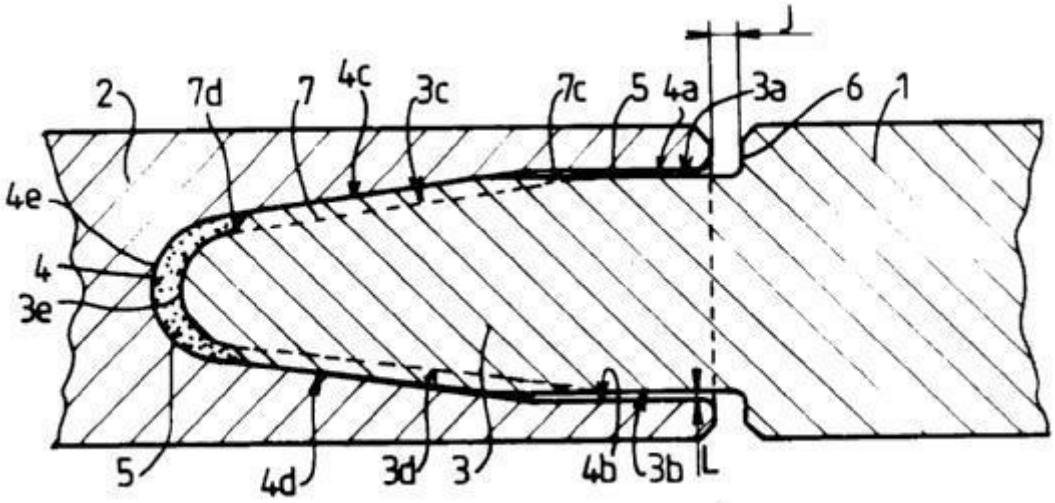

B29C 66/128

{Stepped joint cross-sections}

Definition statement

This place covers:

Example 1, B29C 66/12841 (two butt joint-segments) and B29C 66/1282 (one overlap joint-segment), from

EP1935618:

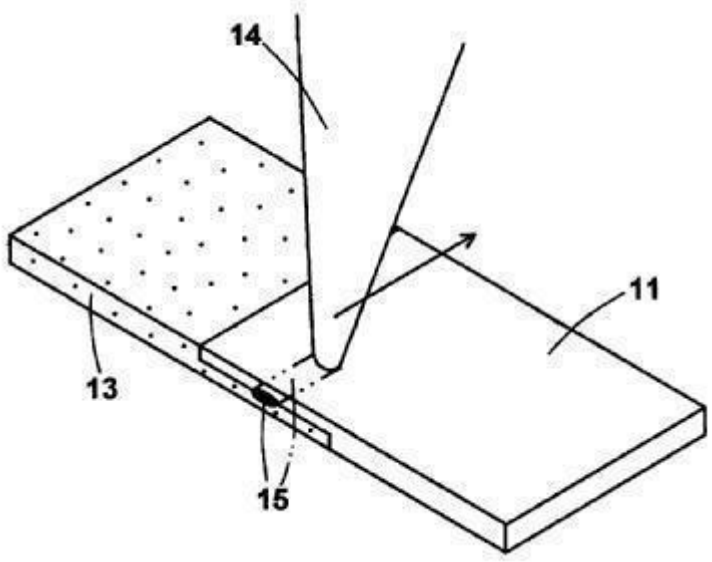

Example 2, B29C 66/12841 (two butt joint-segments) and B29C 66/1282 (one overlap joint-segment), from DE19718790:

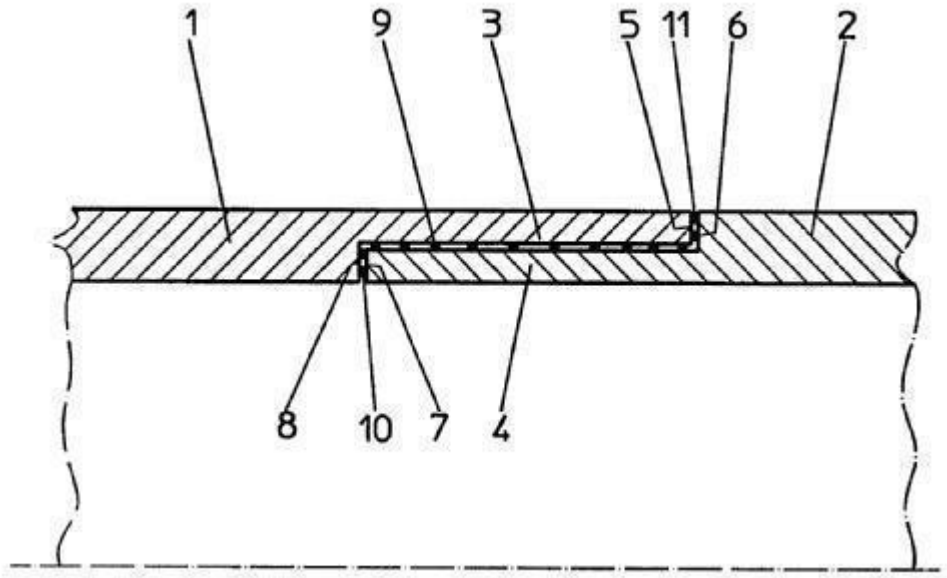

Example 3, B29C 66/12861 (two bevelled joint-segments) and B29C 66/1282 (one overlap joint segment), from

DE19718790:

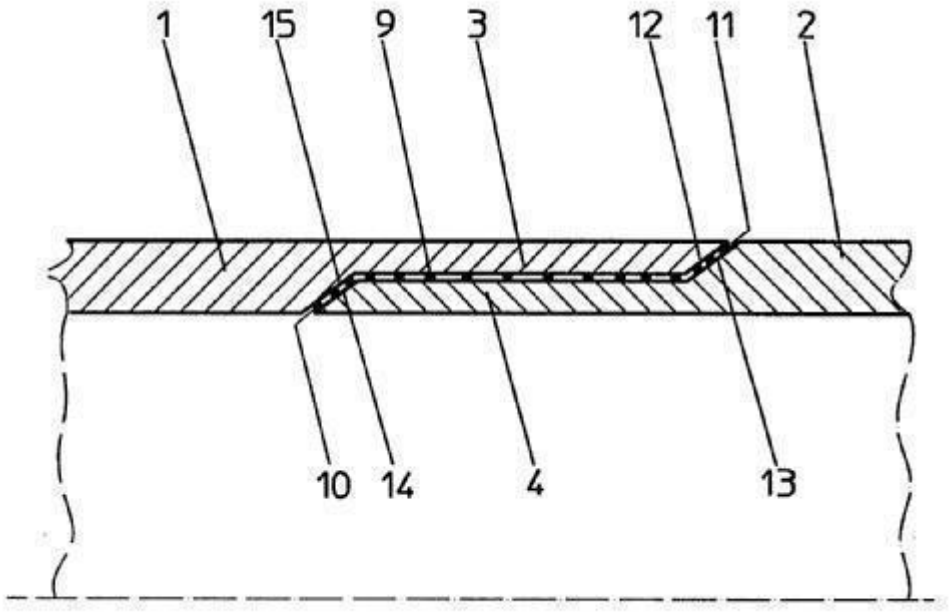

Example 4, B29C 66/12841 (two butt joint-segments) and B29C 66/1286 (one bevelled joint-segment), from

JP11291347:



Example 5, B29C 66/12841 (two butt joint-segments) and B29C 66/1286 (one bevelled joint-segment), from

DE102008010384:

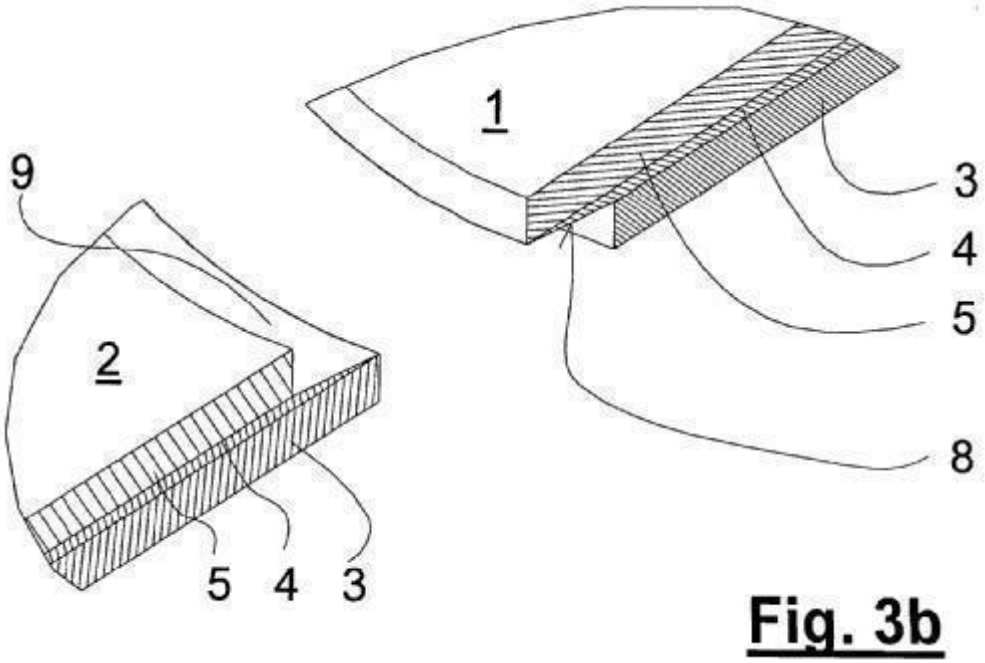

Fig. 3b

Example 6, B29C 66/12821 (two overlap joint-segments) and B29C 66/12841 (two butt joint-segments), from

DE19510493:

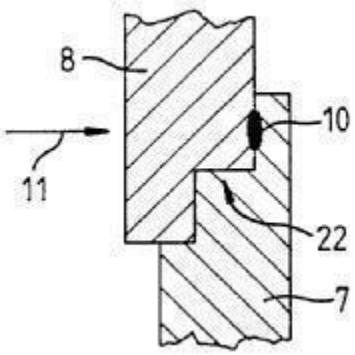

Example 7, B29C 66/12822 (three overlap joint-segments) and B29C 66/12841 (two butt joint-segments), from

US5160771:

FIG. 4

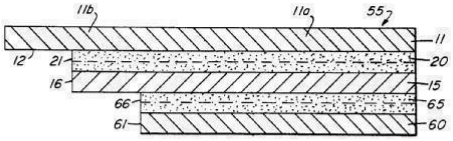

FIG. 5

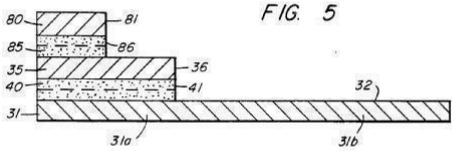

FIG. 6

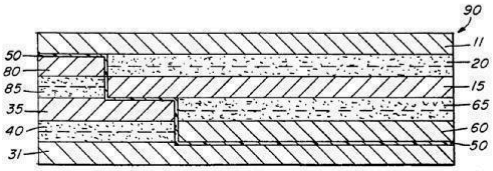

Example 8, B29C 66/12822 (at least three overlap joint-segments) and B29C 66/12842 (three butt joint-segments), from

US5160771:

FIG. 7

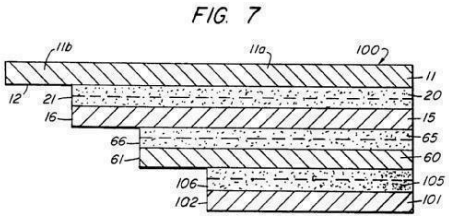

FIG. 8

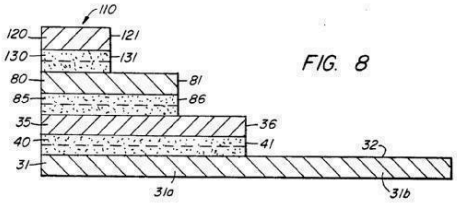

FIG. 9

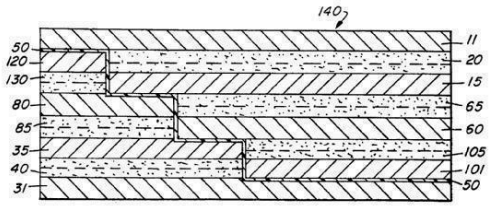

Example 9, B29C 66/12821 (two overlap joint-segments) and B29C 66/1284 (one butt joint-segment), from

GB2425337:

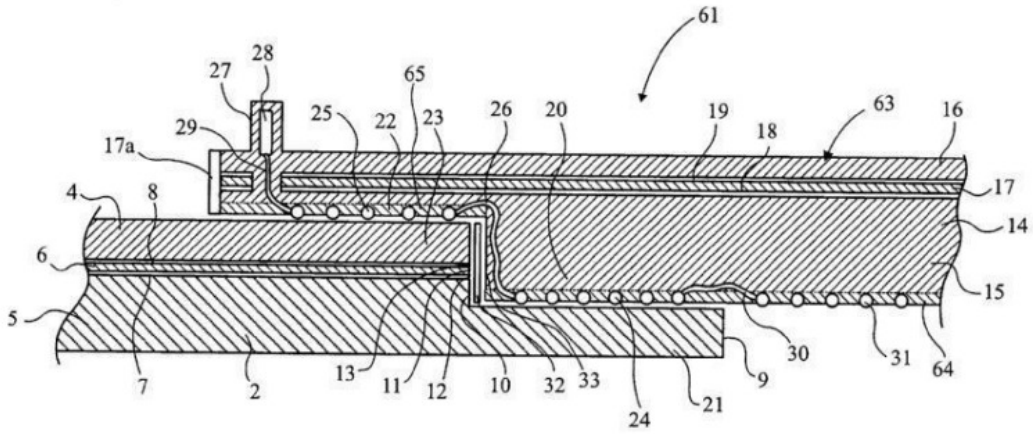

B29C 66/12862

{comprising at least three bevelled joint-segments}

Definition statement

This place covers:

Example 1, from

BE640458:



B29C 66/12881

{comprising at least two monotone curved joint-segments}

Definition statement

This place covers:

Example 1, from

US5698358:

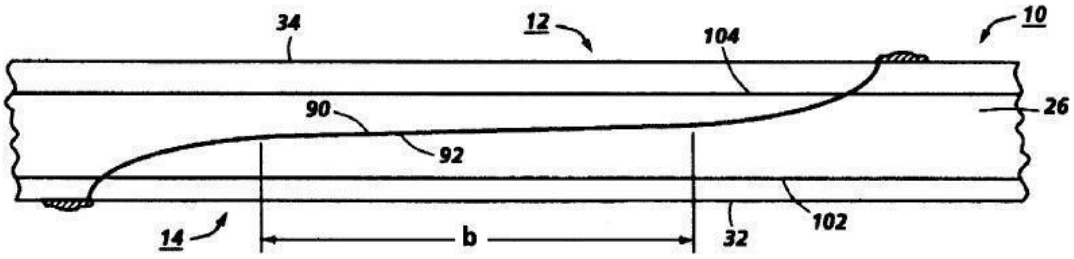

Example 2, from

US5698358:

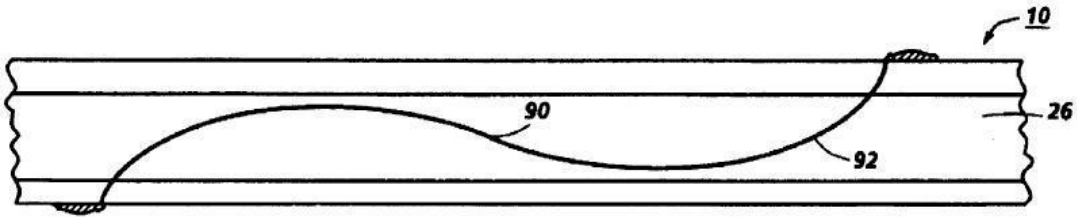

B29C 66/1312

{Single flange to flange joints, the parts to be joined being rigid (the parts to be joined being flexible B29C 66/133)}

Definition statement

This place covers:

Example 1, from

DE19510493:

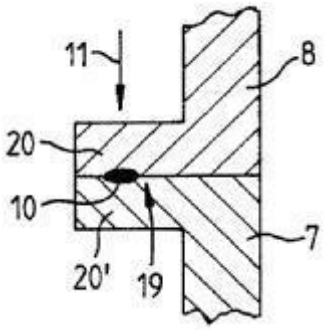

B29C 66/133

{Fin-type joints, the parts to be joined being flexible (the parts to be joined being rigid B29C 66/1312)}

Definition statement

This place covers:

Example 1, from

WO2011001528:

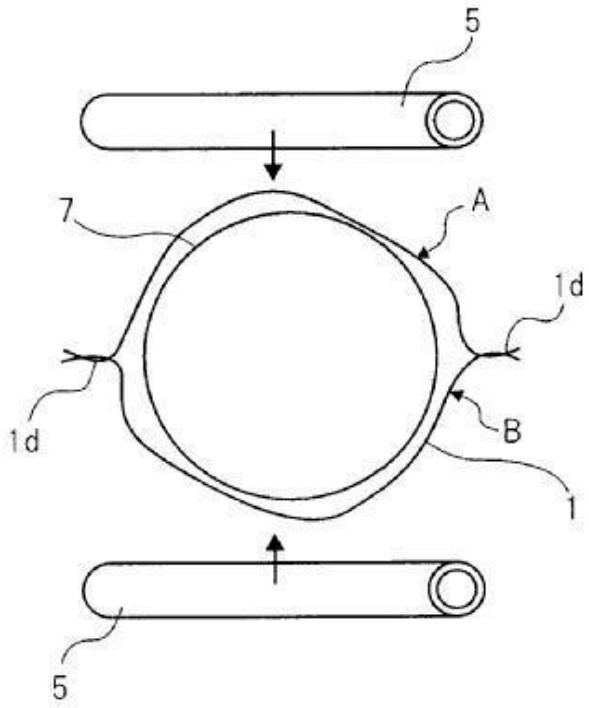

B29C 66/1352

{Single hem to hem joints}

Definition statement

This place covers:

Example 1, from

EP0721745:

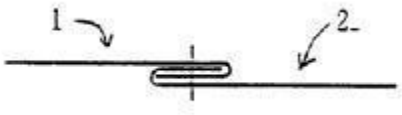

Example 2, from

WO0228210:

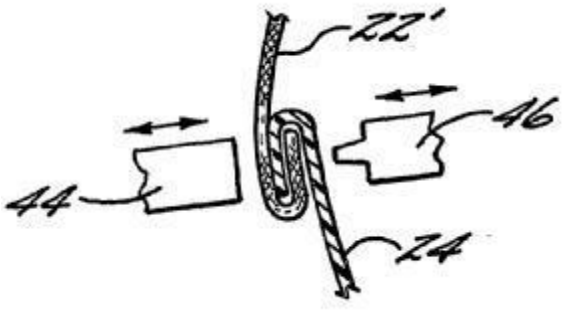

B29C 66/137

{Beaded-edge joints or bead seals (for sealing or securing package folds or closures B65B 51/24)}

Definition statement

This place covers:

Example 1, from

JP49045179:

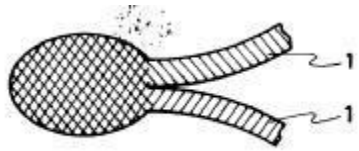

References

Informative references

Attention is drawn to the following places, which may be of interest for search:

Making brushes by welding together bristles made e.g. of plastic materials	A46B 3/06

B29C 66/14

{the joint having the same thickness as the thickness of the parts to be joined (B29C 66/1142 takes precedence)}

Definition statement

This place covers:

Example 1, from

WO9215817:

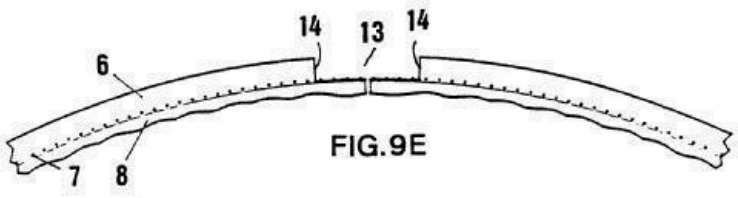

FIG.9E

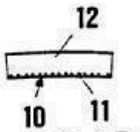

FIG.9B

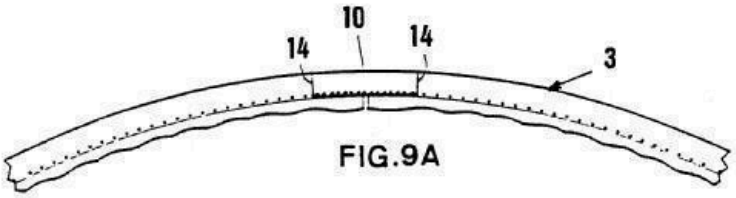

FIG.9A

Example 2, from

CH403537:

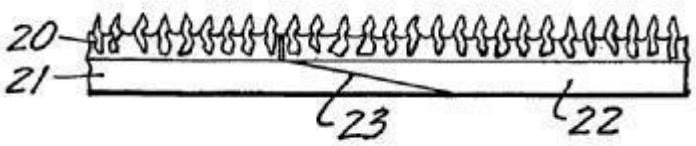

B29C 66/21

{said joint lines being formed by a single dot or dash or by several dots or dashes, i.e. spot joining or spot welding}

Definition statement

This place covers:

Example 1, from

EP1258557:

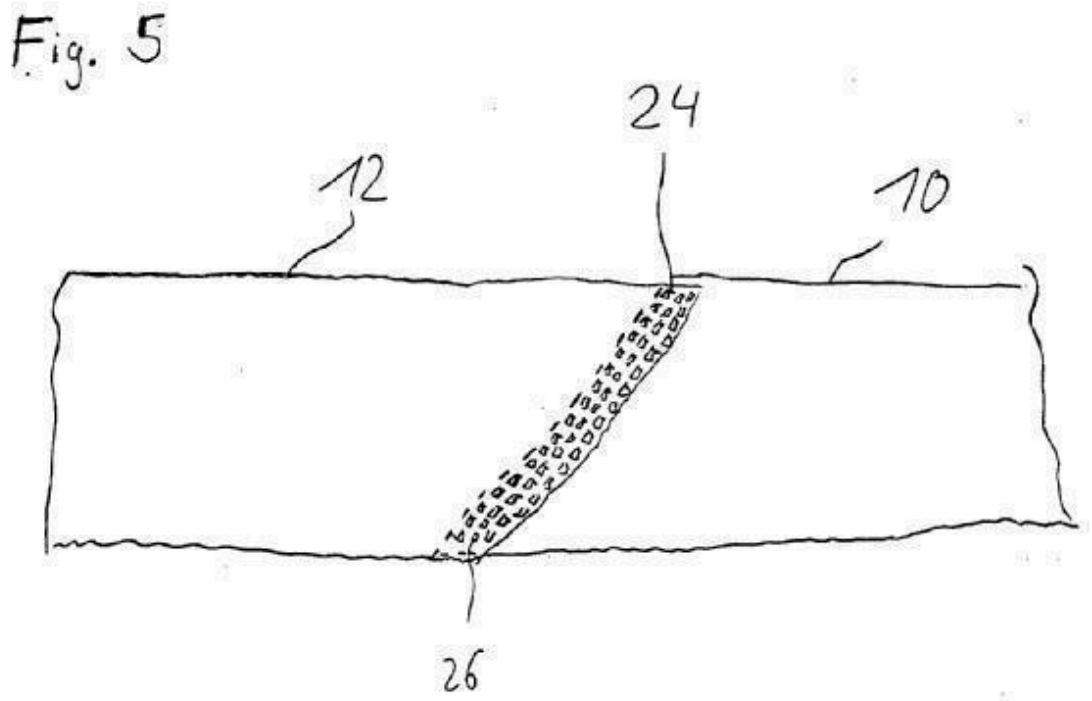

References

Informative references

Attention is drawn to the following places, which may be of interest for search:

Non-woven fabrics formed from fleeces or layers composed of fibres by welding together the fibres at spaced points or locations	D04H 1/5405

B29C 66/221

{being in the form of a sinusoidal wave (B29C 66/2272 takes precedence)}

Definition statement

This place covers:

Example 1, from

DE9213273U:

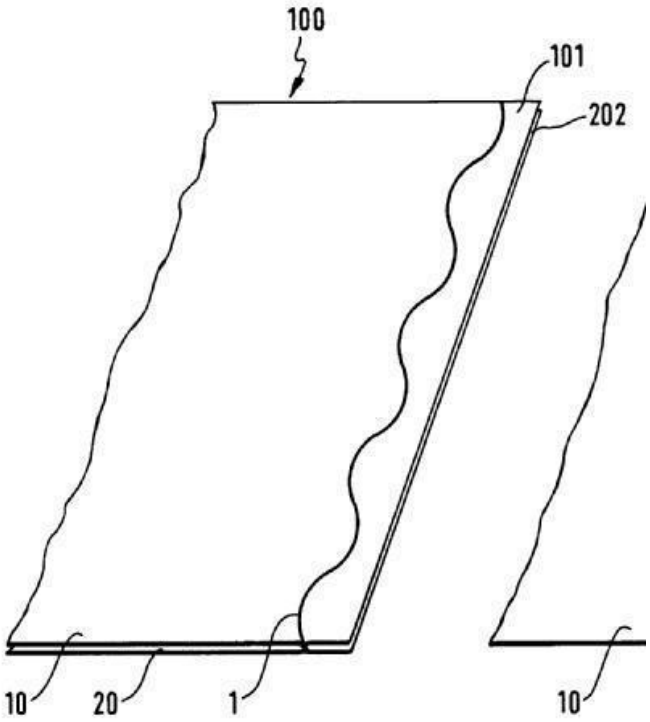

Example 2, from

EP0343629:

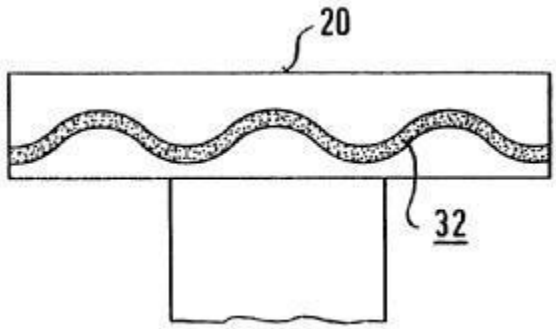

B29C 66/223

{being in the form of a triangle wave or of a sawtooth wave, e.g. zigzagged}

Definition statement

This place covers:

Example 1, from

GB705303:

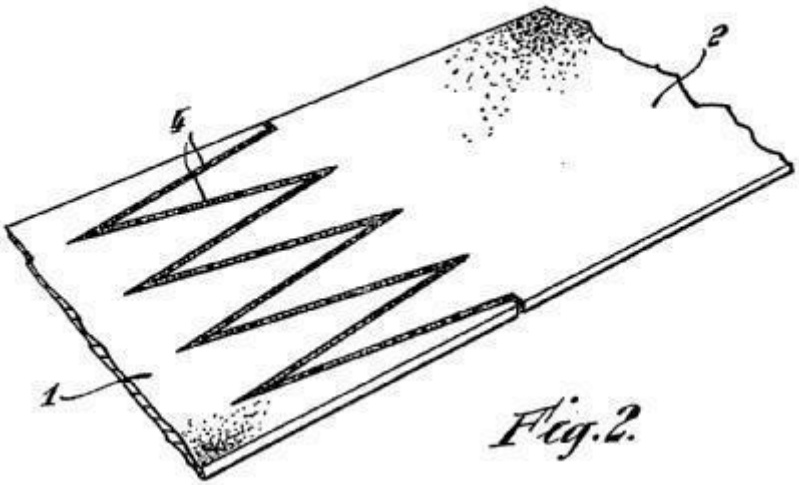

Fig.2.

Example 2, from

EP0343629:

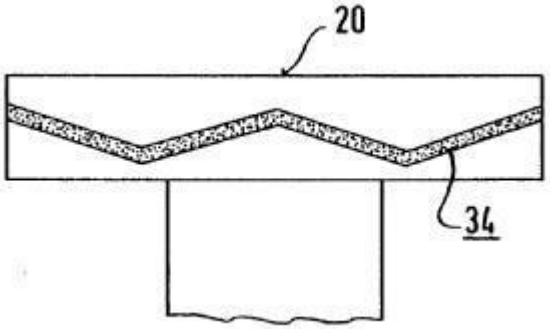

B29C 66/225

{being castellated, e.g. in the form of a square wave or of a rectangular wave (B29C 66/2276 takes precedence)}

Definition statement

This place covers:

Example 1, from

DE3809907:

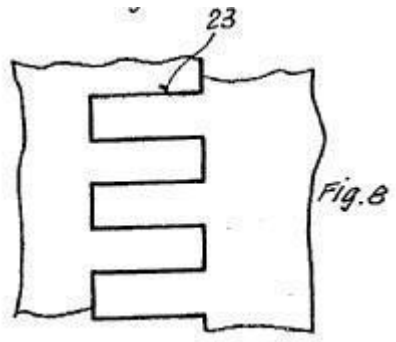

Example 2, from

US5922162:

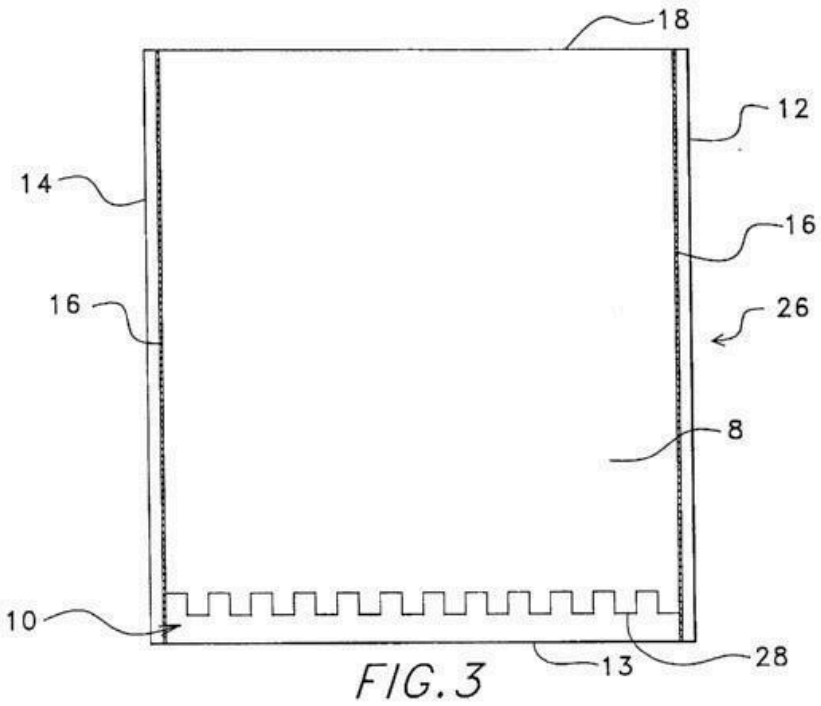

B29C 66/2272

{Teardrop-like, waterdrop-like or mushroom-like interlocking undercuts (tongue and groove joints or tenon and mortise joints comprising teardrop-like, waterdrop-like or mushroom-like interlocking undercuts B29C 66/12421)}

Definition statement

This place covers:

Example 1, from

DE3809907:

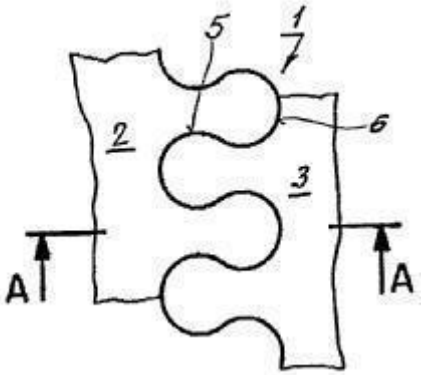

Example 2, from

EP1318327:

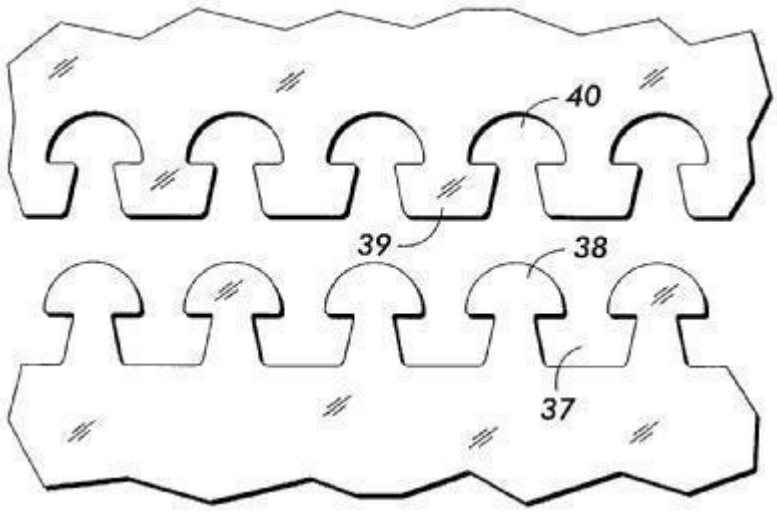

B29C 66/2274

{Dovetailed interlocking undercuts (tongue and groove joints or tenon and mortise joints comprising dovetailed interlocking undercuts B29C 66/12423)}

Definition statement

This place covers:

Example 1, from

DE3809907:

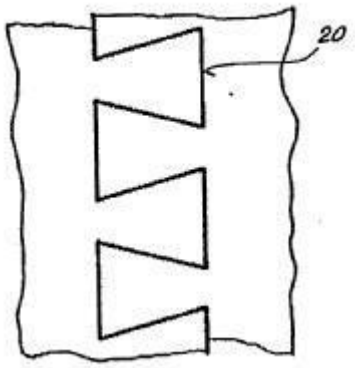

B29C 66/232

{said joint lines being multiple and parallel, i.e. the joint being formed by several parallel joint lines}

Definition statement

This place covers:

Example 1, from

EP0783956:

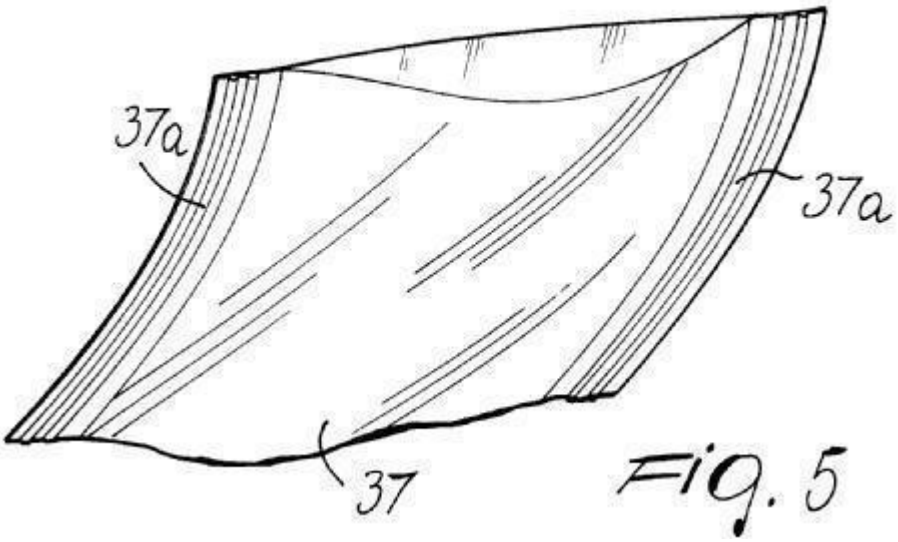

B29C 66/234

{said joint lines being in the form of tessellations}

Definition statement

This place covers:

Example 1, from

US4265954:

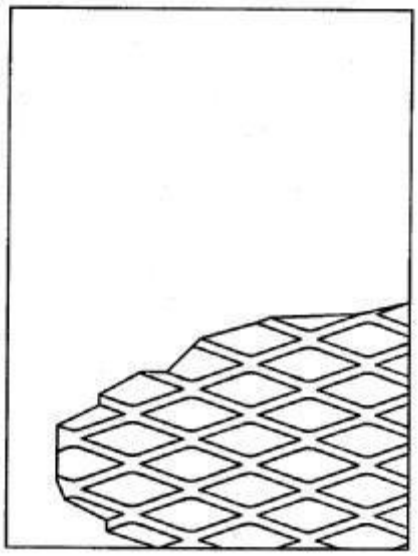

B29C 66/24221

{being circular (B29C 66/51 takes precedence)}

Definition statement

This place covers:

Example 1, from

EP2364836:

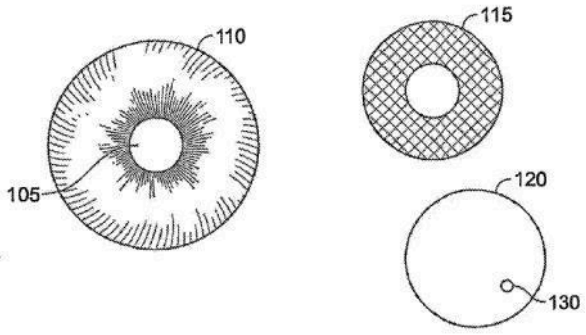

FIG. 2A

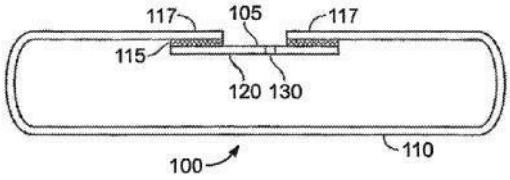

FIG. 2B

B29C 66/24223

{being oval}

Definition statement

This place covers:

Example 1, from

US2010326113:

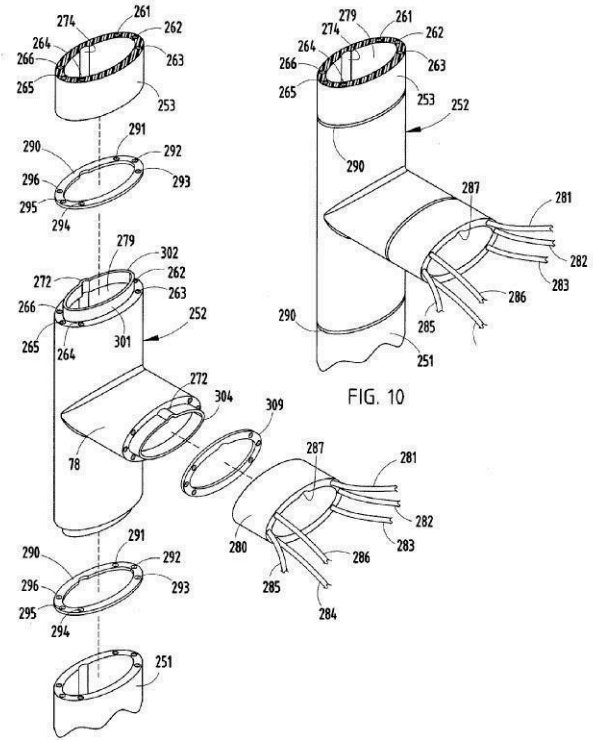

FIG. 10

B29C 66/24241

{forming a triangle}

Definition statement

This place covers:

Example 1, from

US3667593:

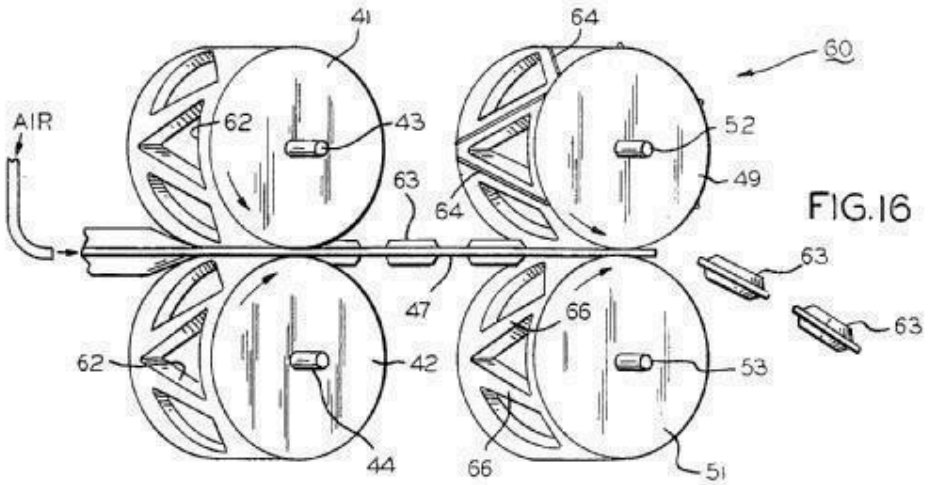

FIG.16

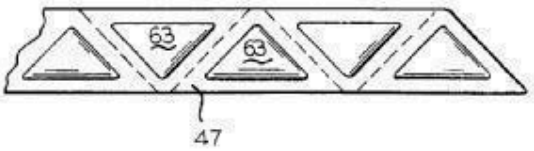

FIG.17

B29C 66/24244

{forming a rectangle}

Definition statement

This place covers:

Example 1, from

GB2394690:

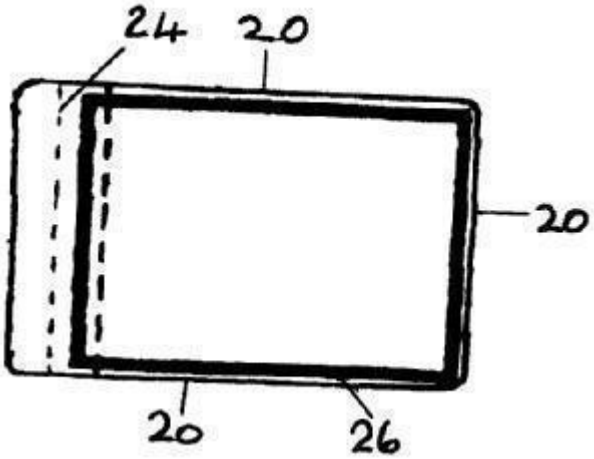

B29C 66/24245

{forming a square}

Definition statement

This place covers:

Example 1, from

JP60137630:

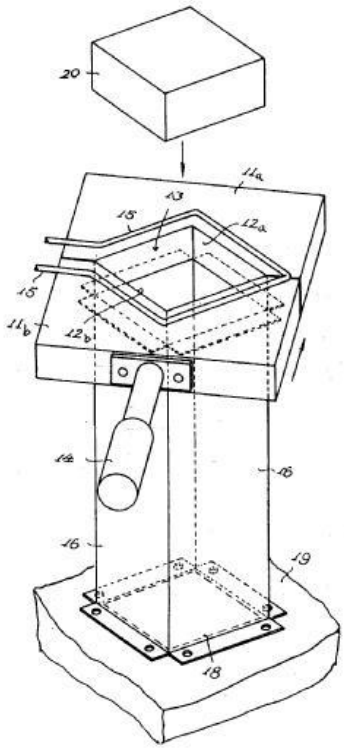

B29C 66/24249

{forming a specific polygon not provided for in B29C 66/24241 - B29C 66/24243}

Definition statement

This place covers:

Example 1, from

EP1516816:

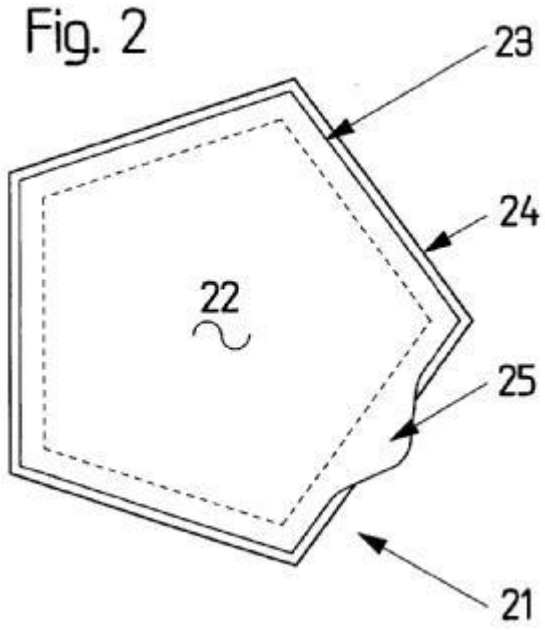

B29C 66/244

{said joint lines being non-straight, e.g. forming non-closed contours}

Definition statement

This place covers:

Example 1, from

EP0343629:

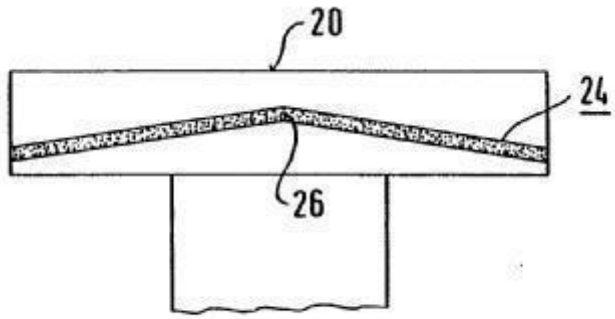

Example 2, from

JP52098783:

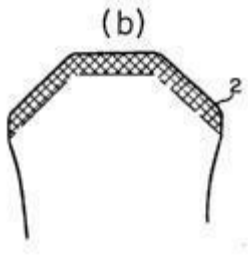

B29C 66/2442

{in the form of a single arc of circle}

Definition statement

This place covers:

Example 1, from

EP0343629:

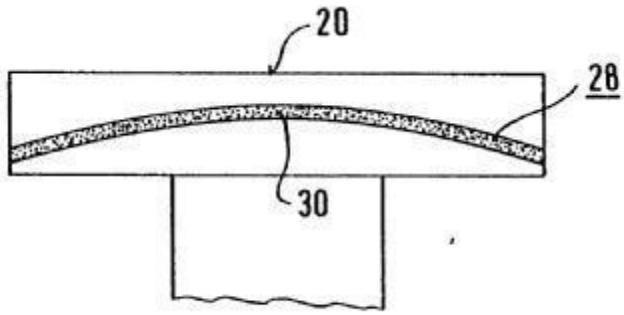

Example 2, from

JP52098783:

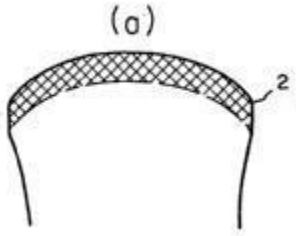

B29C 66/246

{said joint lines forming figures, e.g. animals, flowers, hearts}

Definition statement

This place covers:

Example 1, from

JP62023728:

FIG. 4

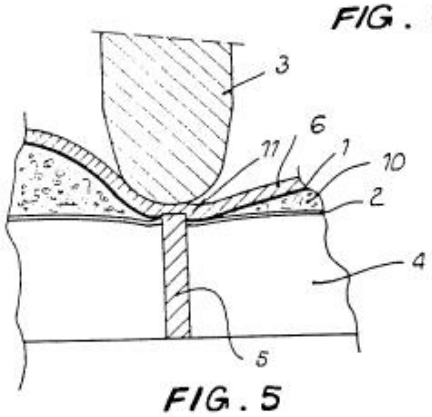

FIG. 5

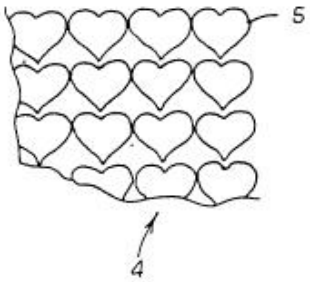

B29C 66/301

{Three-dimensional joints, i.e. the joined area being substantially non-flat (B29C 66/5223, B29C 66/5224, B29C 66/5225 take precedence)}

Definition statement

This place covers:

Example 1, from

JP2000294012:

【図２】

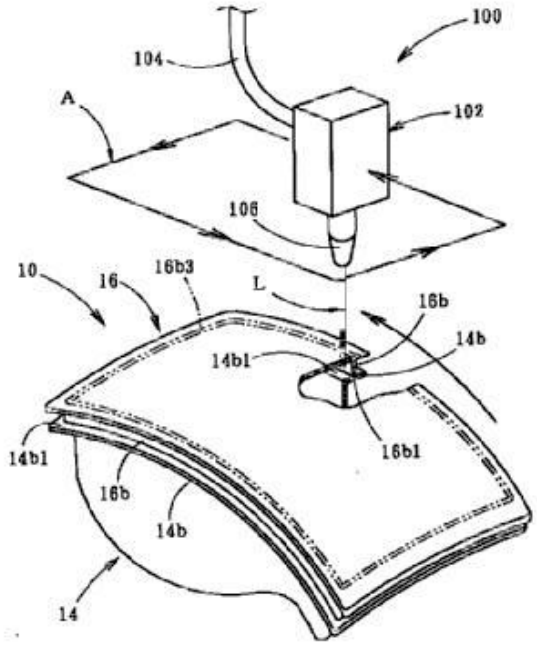

B29C 66/30221

{said melt initiators being point-like}

Definition statement

This place covers:

Example 1, from

JP63023237:

FIG. 8

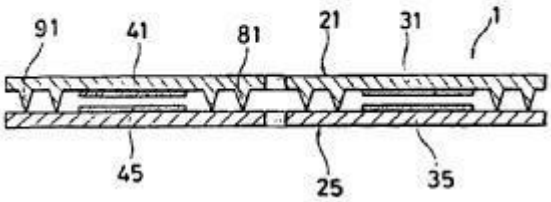

FIG. 9

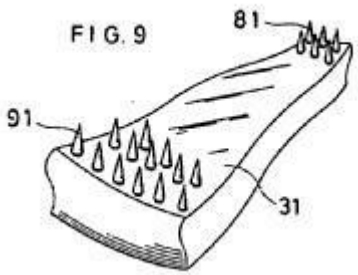

B29C 66/30223

{said melt initiators being rib-like}

Definition statement

This place covers:

Example 1, from

JP2004202828:

【図１１】

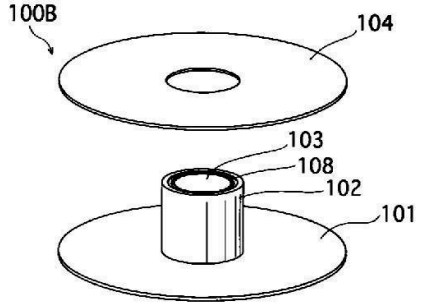

【図１２】

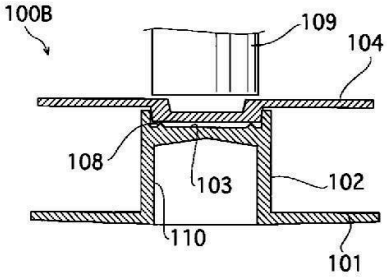

B29C 66/3024

{said melt initiators being non-integral with the parts to be joined}

Definition statement

This place covers:

Example 1, from

EP0301831:

FIG. 11

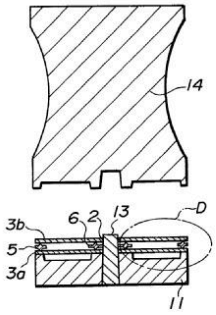

FIG. 13

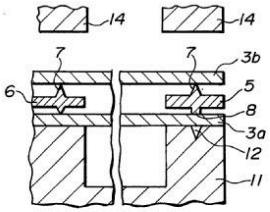

B29C 66/303

{the joint involving an anchoring effect (B29C 66/341, B29C 65/56 and subgroups take precedence)}

References

Informative references

Attention is drawn to the following places, which may be of interest for search:

Measures or configurations in general for obtaining anchoring effects in the contact areas between layers	B29C 37/0078

B29C 66/30321

{making use of protrusions belonging to at least one of the parts to be joined}

Definition statement

This place covers:

Example 1, from

CH493325:

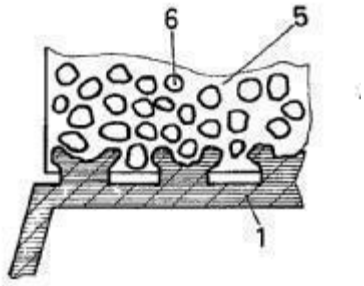

Fig.7

Example 2, from

JP59127982:

第2図

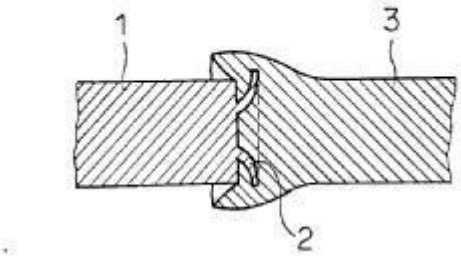

B29C 66/30325

{making use of cavities belonging to at least one of the parts to be joined}

Definition statement

This place covers:

Example 1, from

DE19523900:

Fig. 1

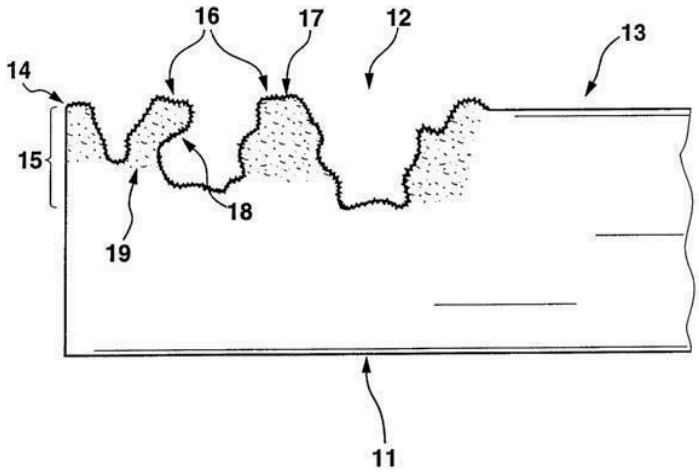

Fig. 2

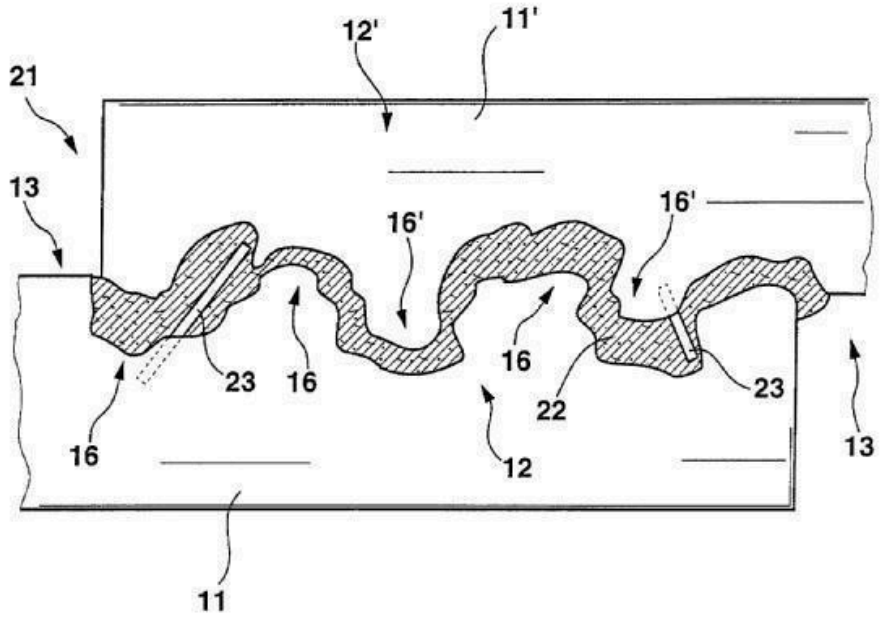

B29C 66/3034

{making use of additional elements, e.g. meshes}

Definition statement

This place covers:

Example 1, from

DE2746544:

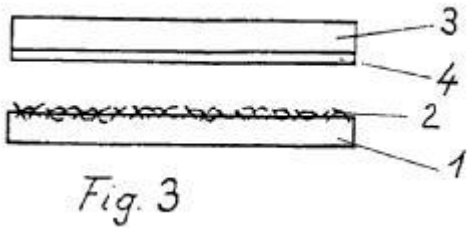

Fig. 3

B29C 66/30341

{non-integral with the parts to be joined, e.g. making use of extra elements (B29C 65/562 takes precedence)}

Definition statement

This place covers:

Example 1, from

EP0158528:

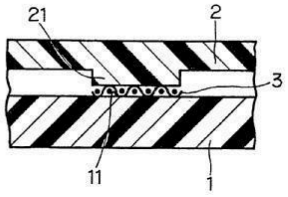

Fig. 1

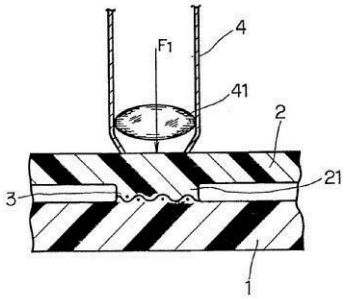

Fig. 3

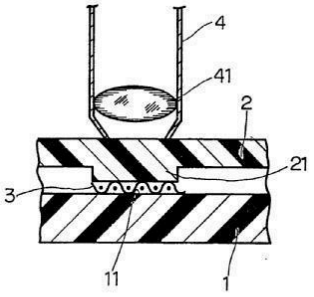

Fig. 2

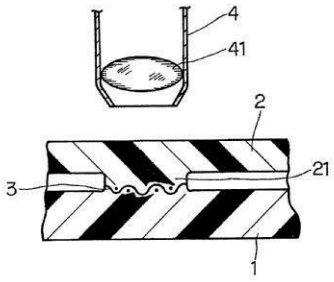

Fig. 4

B29C 66/304

{Joining through openings in an intermediate part of the article (B29C 66/3034 takes precedence)}

Definition statement

This place covers:

Example 1, from

CH644411:

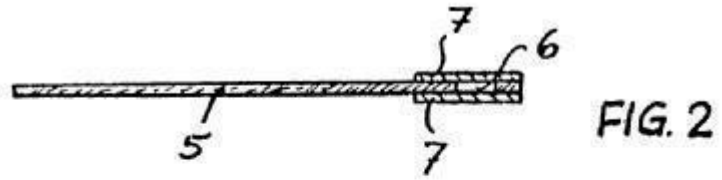

FIG. 2

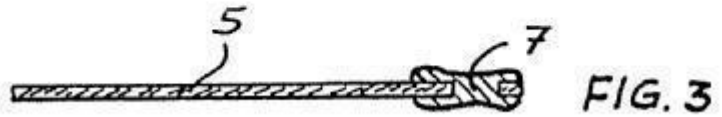

FIG. 3

Example 2, from

DE4428938:

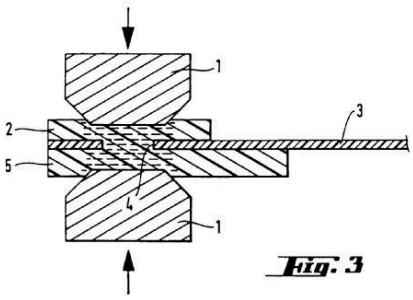

Fig. 3

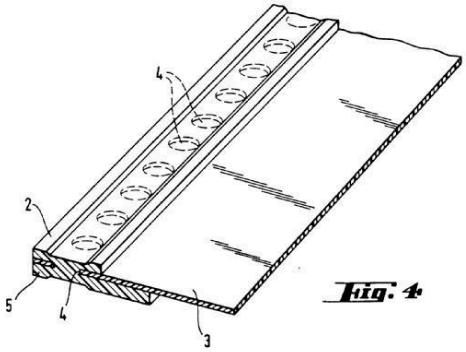

Fig. 4

B29C 66/306

{Applying a mark during joining}

Definition statement

This place covers:

Example 1, from

JP1199845:

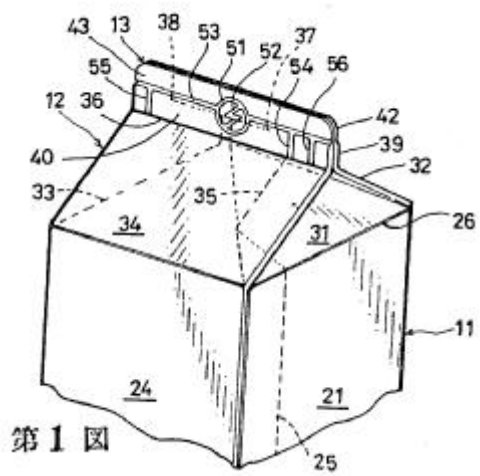

第１図

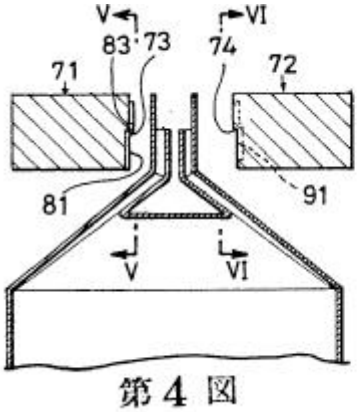

第４図

第３図

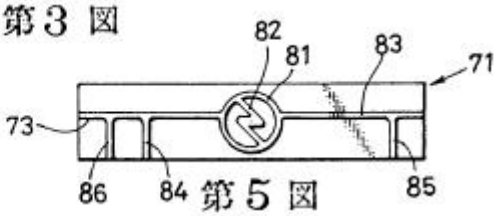

第５図

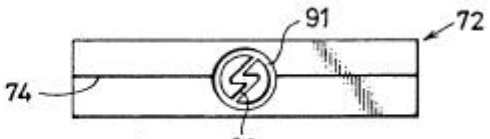

第６図

B29C 66/30621

{in the form of letters}

Definition statement

This place covers:

Example 1, from

DE20212606U:

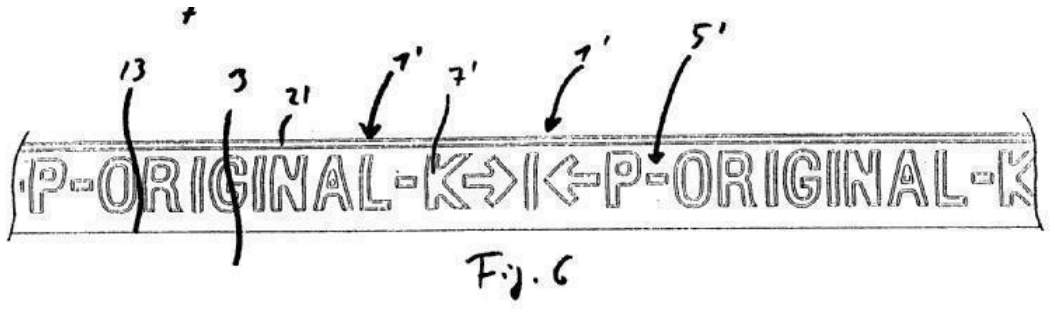

Fig. 6

B29C 66/30623

{in the form of numbers}

Definition statement

This place covers:

Example 1, from

FR2207812:

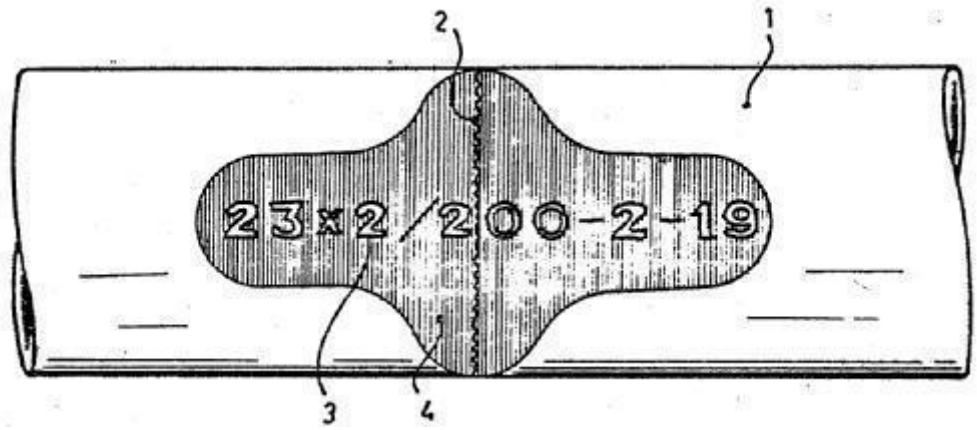

B29C 66/322

{Providing cavities in the joined article to collect the burr}

Definition statement

This place covers:

Example 1, from

WO0147691:

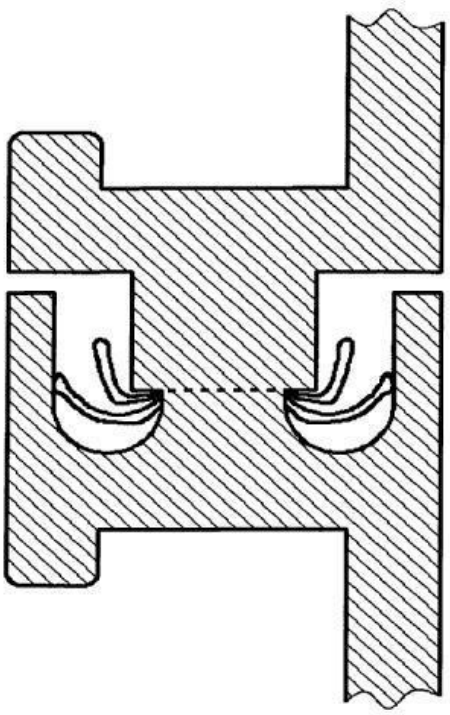

This group also covers providing cavities in the joined article to collect adhesive.

B29C 66/324

{Avoiding burr formation}

Definition statement

This place covers:

Example 1, from

EP0415068:

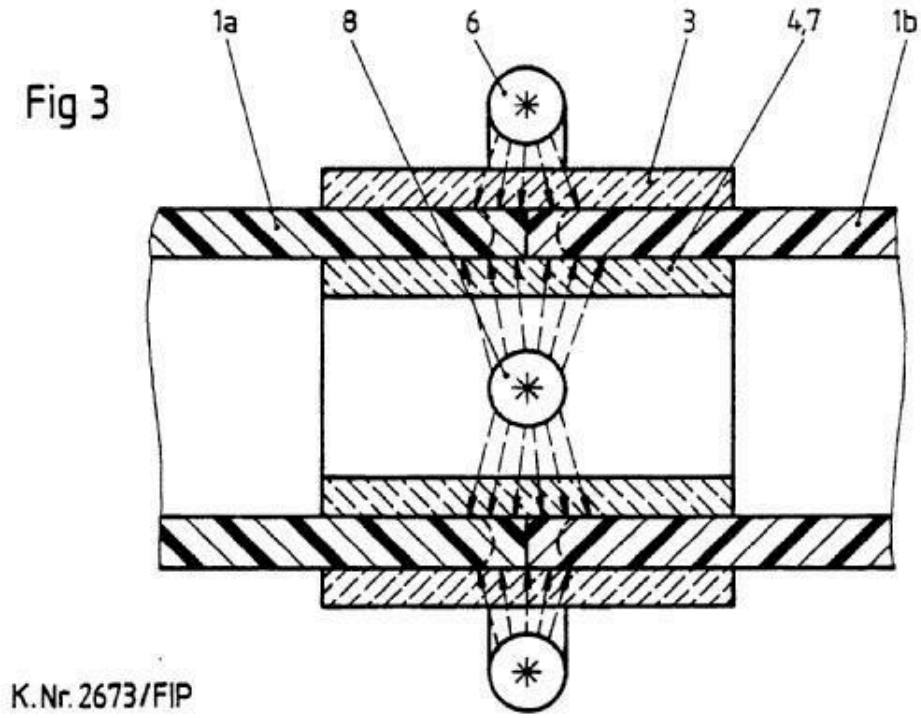

B29C 66/3242

{on the inside of a tubular or hollow article}

Definition statement

This place covers:

Example 1, from

WO2010086164:

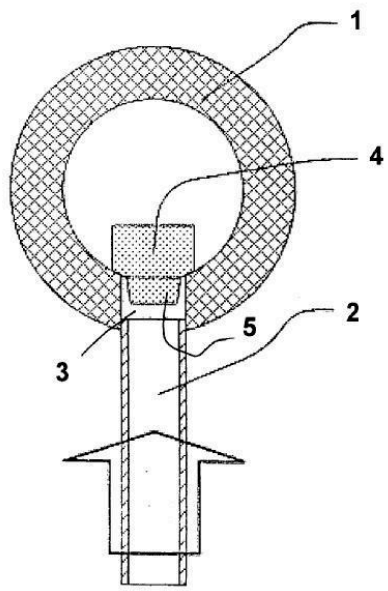

Fig. 1a

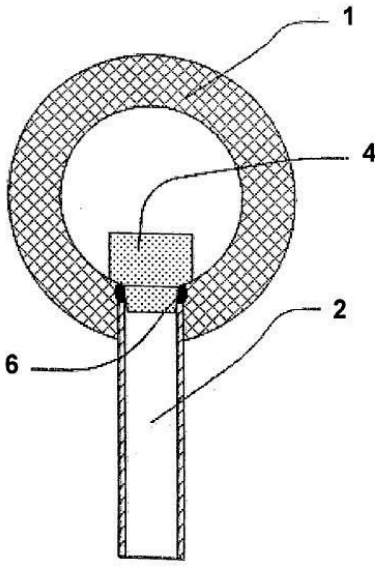

Fig. 1b

B29C 66/326

{Shaping the burr, e.g. by the joining tool}

Definition statement

This place covers:

Example 1, from

US2003046906:

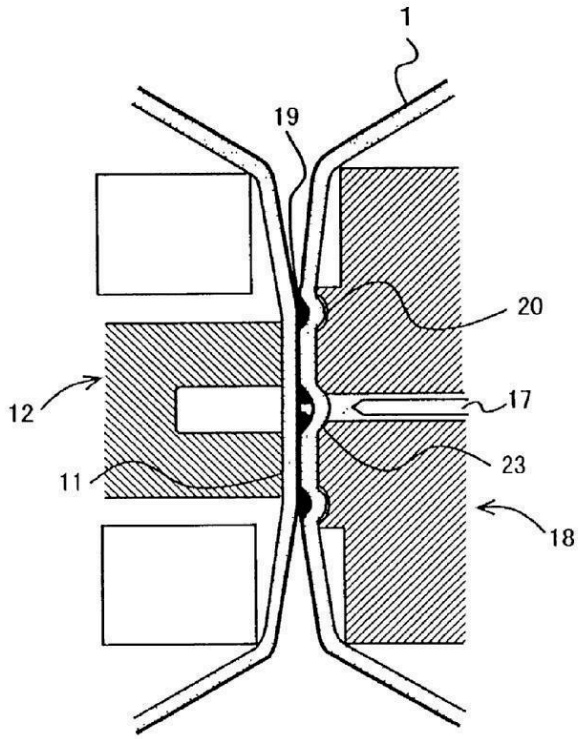

B29C 66/3262

{as after-treatment, e.g. by a separate tool}

Definition statement

This place covers:

Example 1, from

EP0313731:

Fig 1

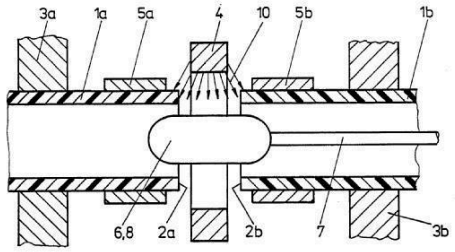

Fig 2

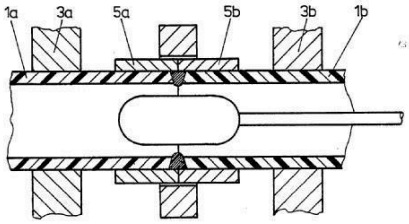

Fig 3

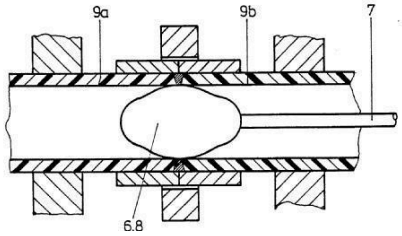

References

Informative references

Attention is drawn to the following places, which may be of interest for search:

Treating the weld bead of metal tubes	B21C 37/0811

B29C 66/344

{Stretching or tensioning the joint area during joining}

Definition statement

This place covers:

Example 1, from

US2009032166:

FIG.4D

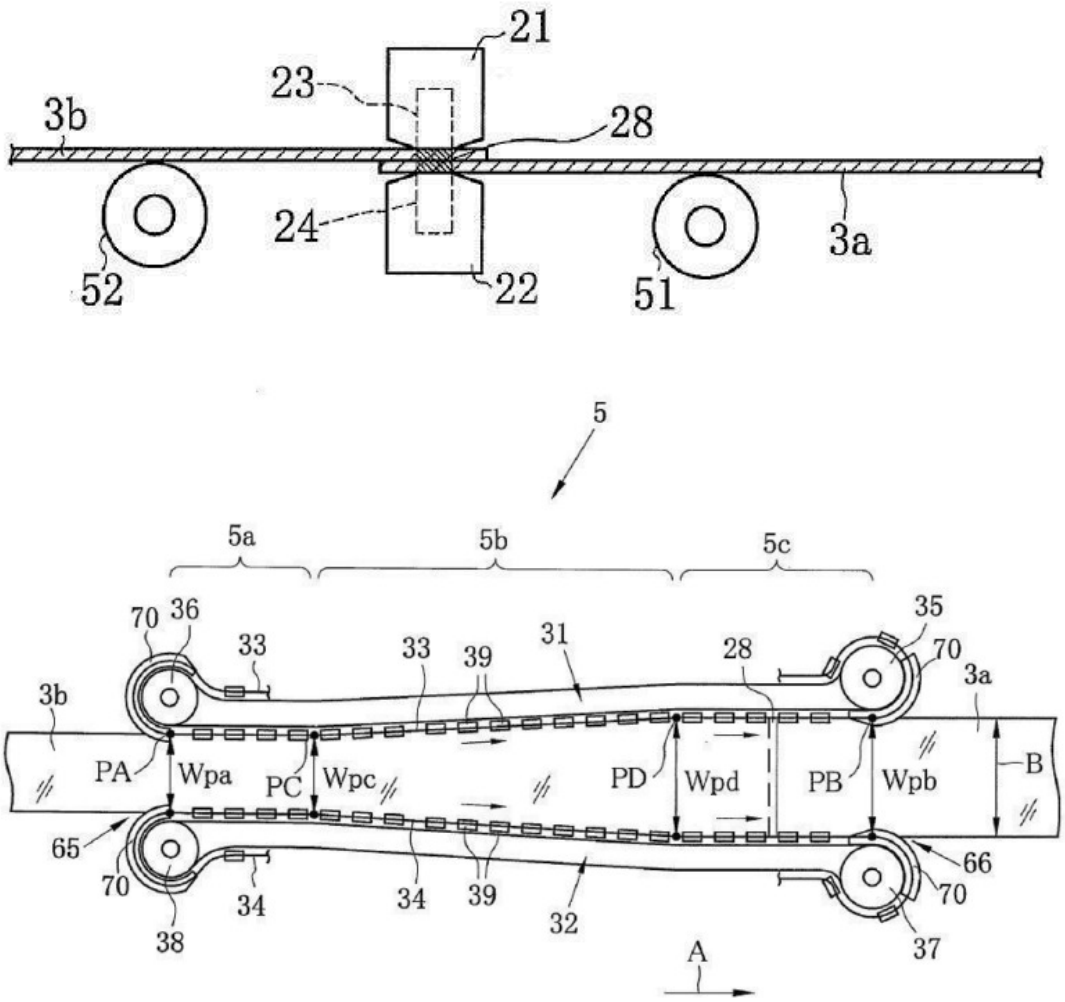

B29C 66/345

{Progressively making the joint, e.g. starting from the middle (B29C 66/8341, B29C 65/12, B29C 65/14, B29C 65/16 take precedence)}

Definition statement

This place covers:

Example 1, from

WO2011065827:

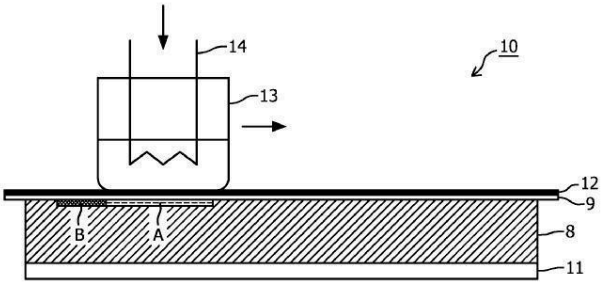

FIG. 2C

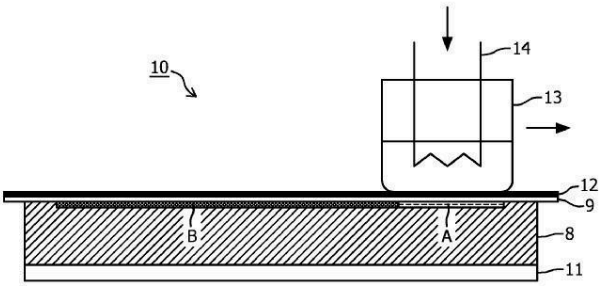

FIG. 2D

B29C 66/3452

{Making complete joints by combining partial joints}

Definition statement

This place covers:

Example 1, from

EP2323804:

Fig.5

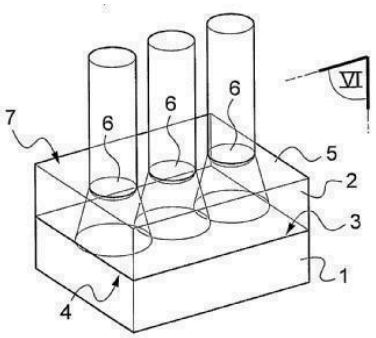

Fig.6

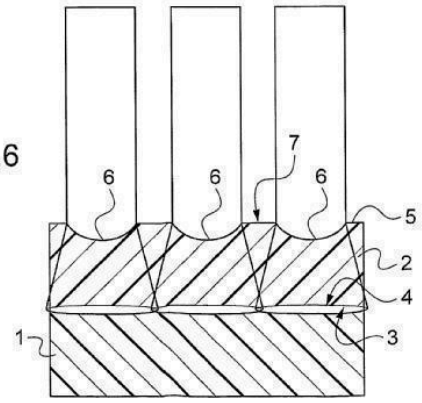

B29C 66/346

{Making joints having variable thicknesses in the joint area, e.g. by using jaws having an adapted configuration}

Definition statement

This place covers:

Example 1, from

DE102006045338:

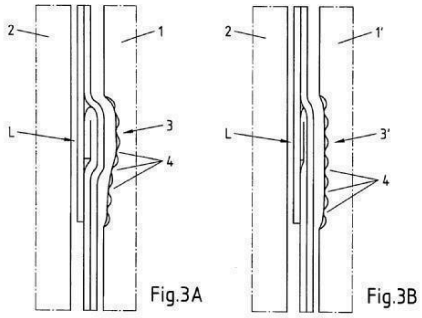

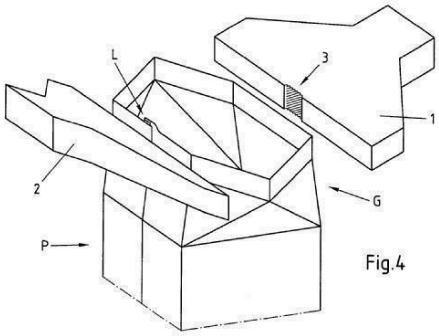

Example 2, from

EP1468914:

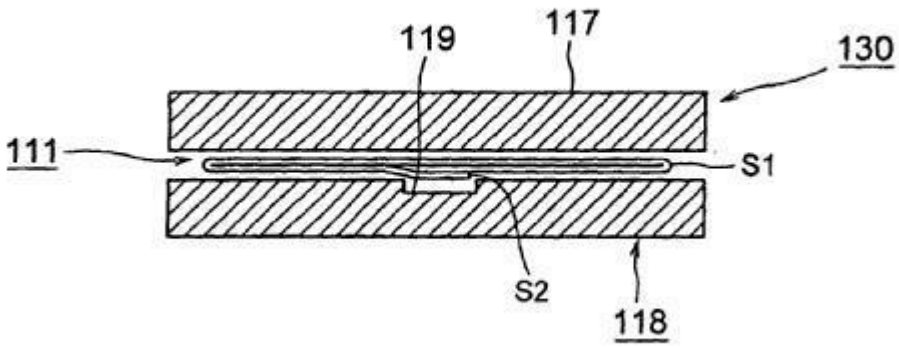

B29C 66/3462

{by differentially heating the zones of different thickness}

Definition statement

This place covers:

Example 1, from

EP1837161:

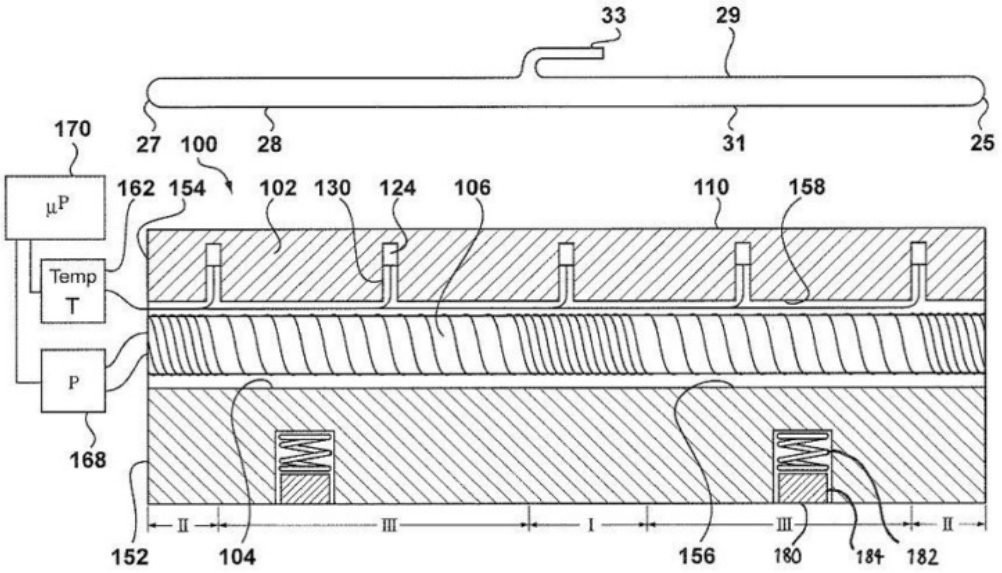

B29C 66/3472

{in the plane of the joint, e.g. along the joint line in the plane of the joint or perpendicular to the joint line in the plane of the joint}

Definition statement

This place covers:

Example 1, from

DE19624625:

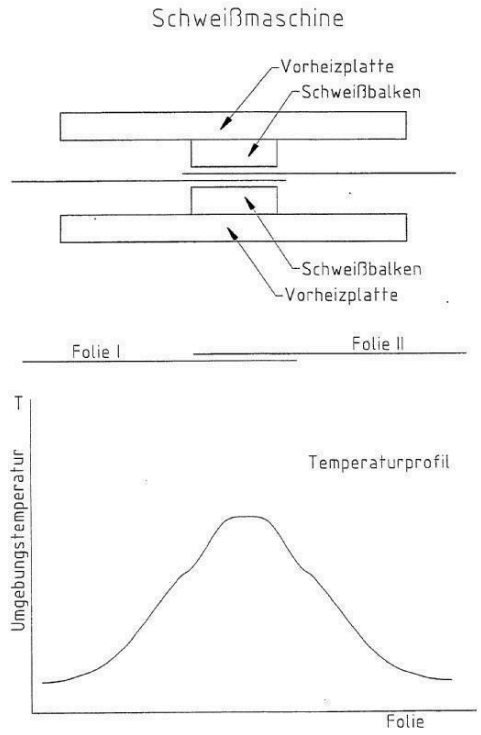

B29C 66/3474

{perpendicular to the plane of the joint}

Definition statement

This place covers:

Example 1, from

US2009294047:

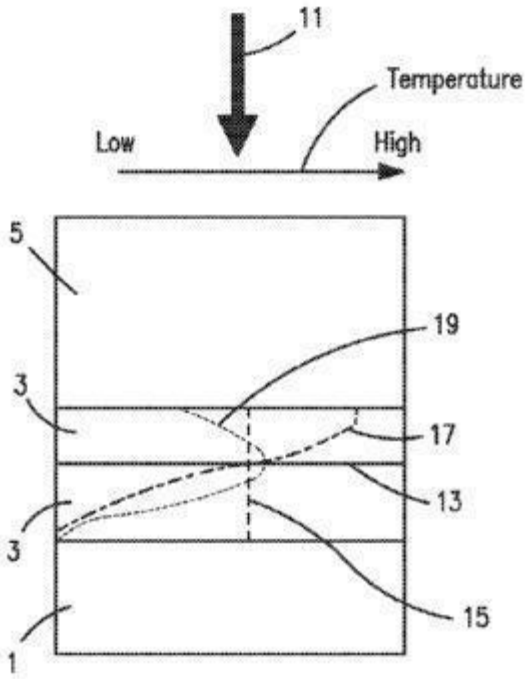

B29C 66/348

{Avoiding melting or weakening of the zone directly next to the joint area, e.g. by cooling}

Definition statement

This place covers:

Example 1, from

US2005225991:

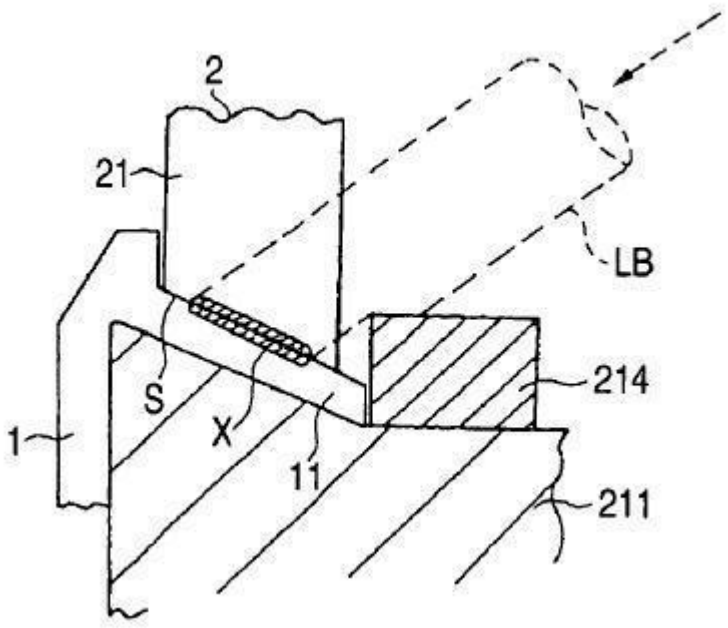

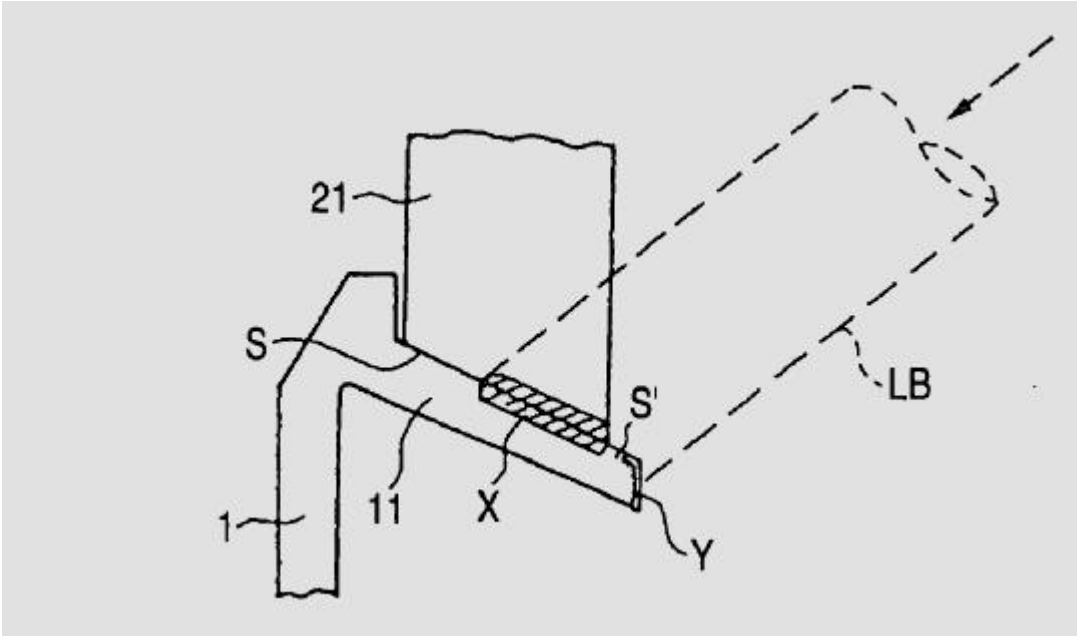

B29C 66/349

{Cooling the welding zone on the welding spot}

Definition statement

This place covers:

Example 1, from

WO2010074348:

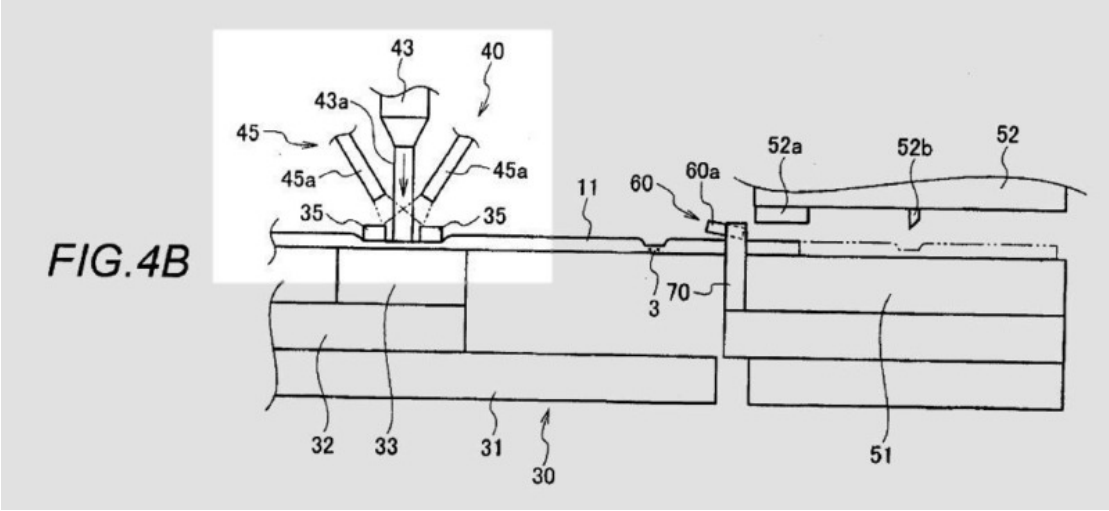

B29C 66/3492

{by means placed on the side opposed to the welding tool}

Definition statement

This place covers:

Example 1, from

US3231444:

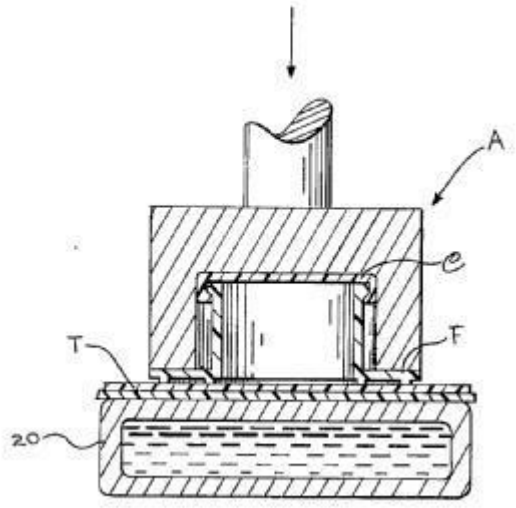

B29C 66/40

{General aspects of joining substantially flat articles, e.g. plates, sheets or web-like materials; Making flat seams in tubular or hollow articles; Joining single elements to substantially flat surfaces}

References

Informative references

Attention is drawn to the following places, which may be of interest for search:

Joining sheets or plates in general	F16B 5/00
Joining sheets or plates in general, by means of welds	F16B 5/08

B29C 66/43

{Joining a relatively small portion of the surface of said articles (B29C 66/45 takes precedence)}

Definition statement

This place covers:

Example 1,

from

JP2007296857:

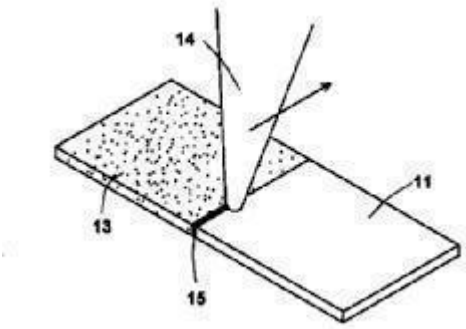

Example 1, from

JP2007112127:

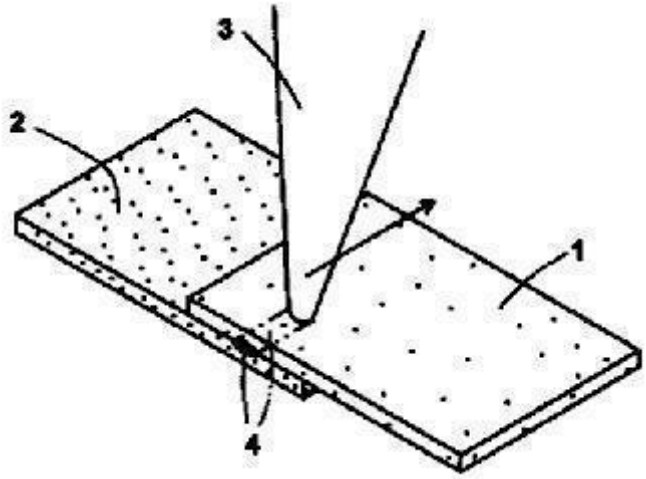

References

Informative references

Attention is drawn to the following places, which may be of interest for search:

Joining sheets, plates or panels, relating to finishing work on buildings	E04F 2201/00

B29C 66/431

{Joining the articles to themselves (B29C 66/4322 and B29C 66/4332 take precedence)}

Definition statement

This place covers:

Example 1, from

US6213184:

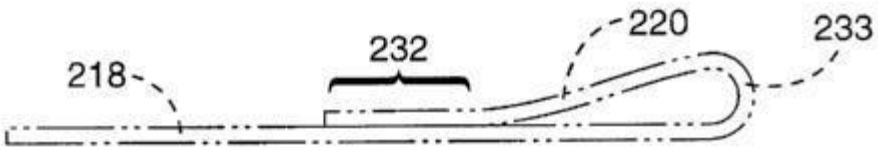

B29C 66/4312

{for making flat seams in tubular or hollow articles, e.g. transversal seams}

Definition statement

This place covers:

Example 1, from

DE102009003029:

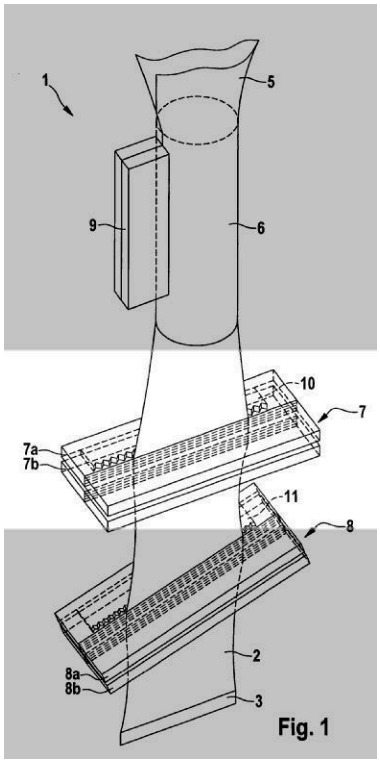

Fig. 1

References

Informative references

Attention is drawn to the following places, which may be of interest for search:

Rollers for producing longitudinal and transverse seams simultaneously in package webs or tubes	B65B 51/28
Device specially adapted for producing transverse seams in package webs or tubes, e.g. for subdividing filled tubes, by applying pressure and heat	B65B 51/30

B29C 66/43121

{Closing the ends of tubular or hollow single articles, e.g. closing the ends of bags (closing tube ends B29C 57/10)}

References

Informative references

Attention is drawn to the following places, which may be of interest for search:

Closing bags by reciprocating or oscillating members applying or generating heat or pressure or combinations thereof	B65B 51/146

B29C 66/43122

{Closing the top of gable top containers (gable top containers B65D 5/067)}

Definition statement

This place covers:

Example 1, from

JP9142441:

【図１】

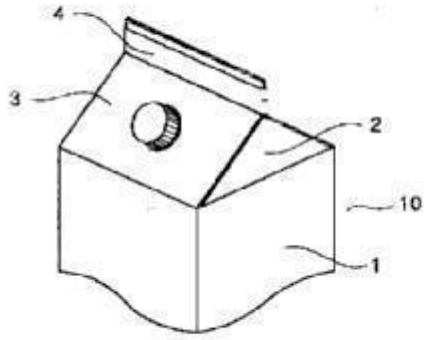

【図２】

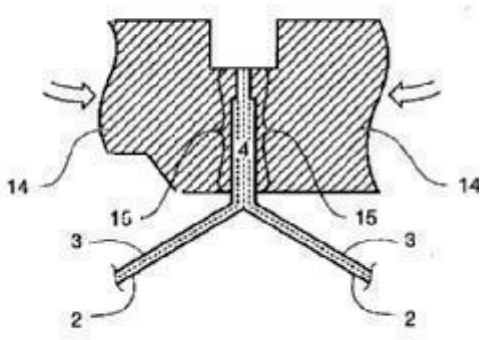

Example 2, from

EP0097984:

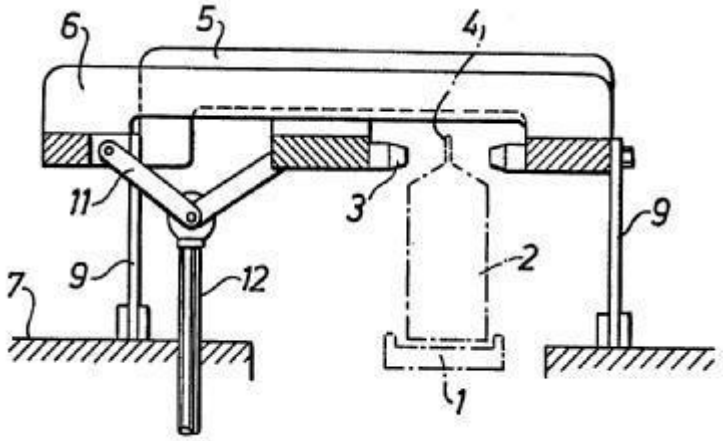

B29C 66/43123

{Closing the ends of squeeze tubes, e.g. for toothpaste or cosmetics (producing flexible squeeze tubes by combined operations B29D 23/20; collapsible tubes B65D 35/00)}

Definition statement

This place covers:

Example 1, from

DE29905766U

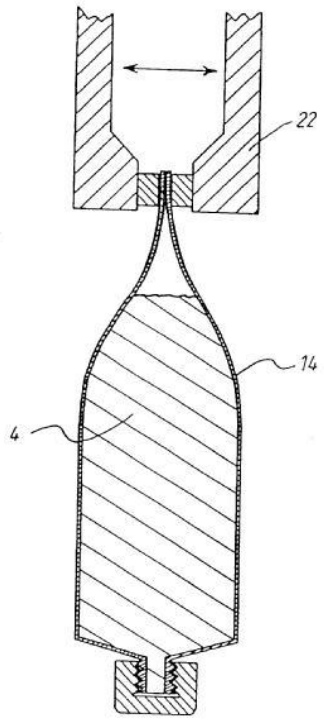

References

Informative references

Attention is drawn to the following places, which may be of interest for search:

Heating tube ends	B29B 13/025
Closing collapsible or resilient tubes, e.g. for tooth paste, after filling	B65B 7/14

B29C 66/43129

{said flat seams being transversal but non-orthogonal with respect to the tubular or hollow articles, i.e. oblique}

Definition statement

This place covers:

Example 1, from

DE102009003029:

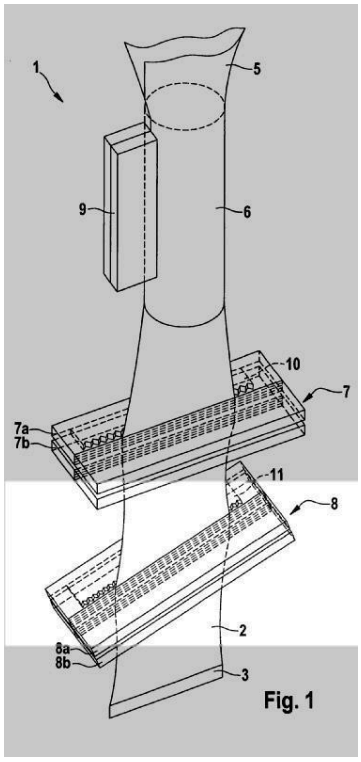

B29C 66/432

{for making tubular articles or closed loops, e.g. by joining several sheets (B29C 66/547 takes precedence; bending and joining sheets at right angles to the longitudinal axis of the article being formed and joining the edges B29C 53/38); for making hollow articles or hollow preforms}

Definition statement

This place covers:

Example 1, from

FR2856008:

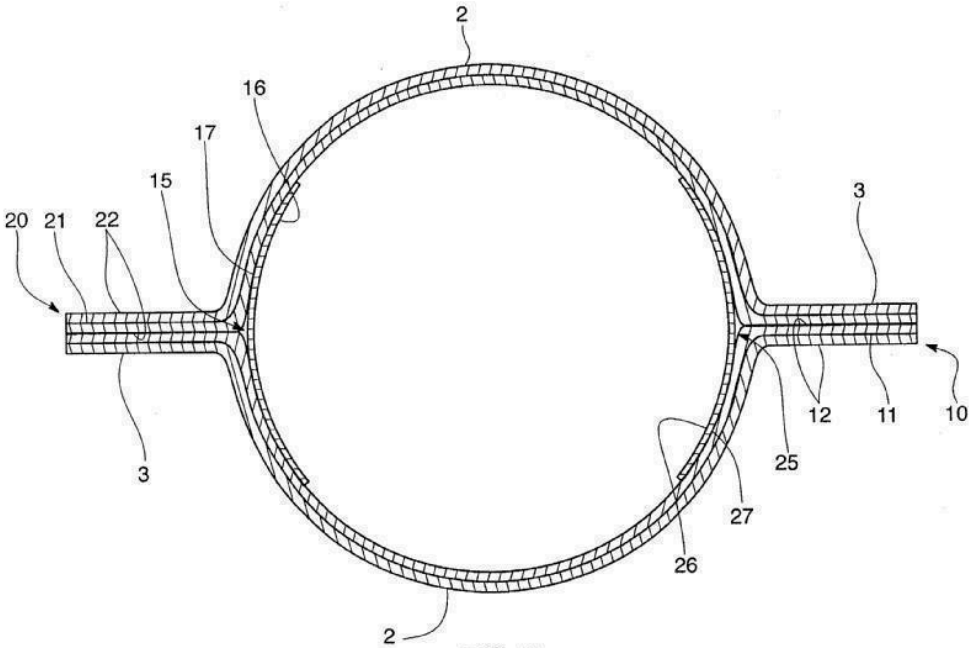

FIG. 6

Example 2, from

DE19813387:

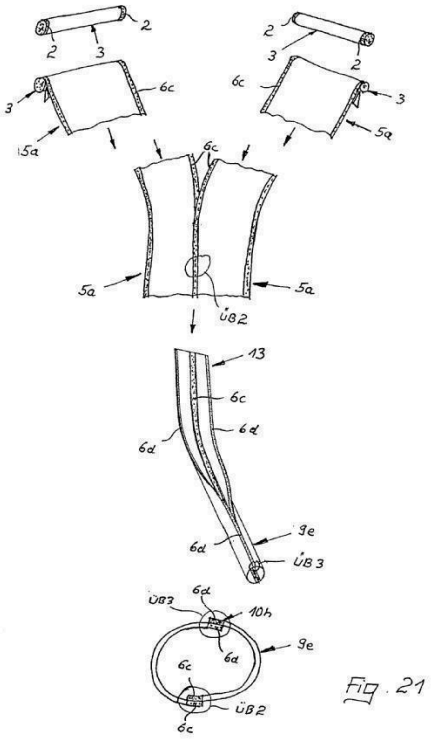

Fig. 21

Example 3, from

DE19813387:

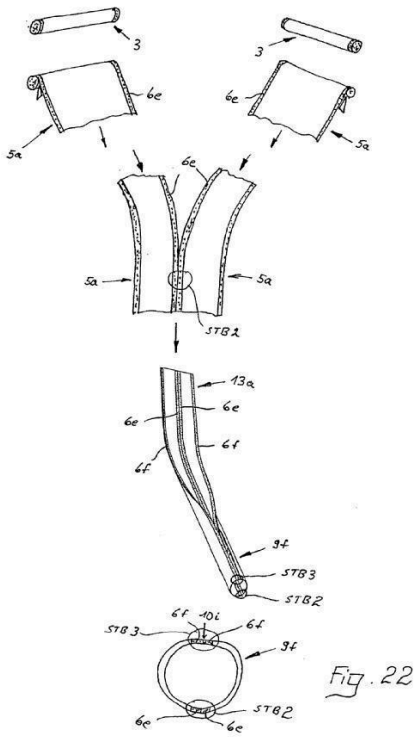

Fig. 22

B29C 66/4322

{by joining a single sheet to itself (B29C 66/4332 takes precedence)}

Definition statement

This place covers:

Example 1, from

JP10016058:

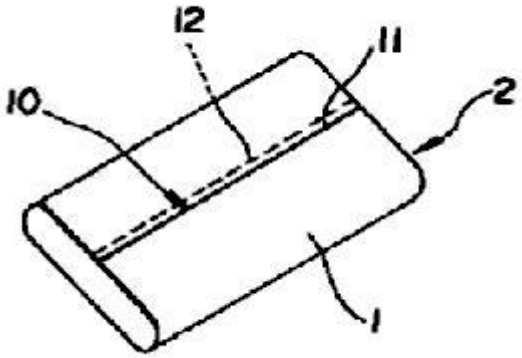

References

Informative references

Attention is drawn to the following places, which may be of interest for search:

Tube advancing means combined with longitudinal welding devices, for enclosing successive articles, or quantities of material, in webs formed into tubes in situ around filling nozzles	B65B 9/2021

B29C 66/4324

{for making closed loops, e.g. belts}

Definition statement

This place covers:

Example 1, from

WO2006003524:

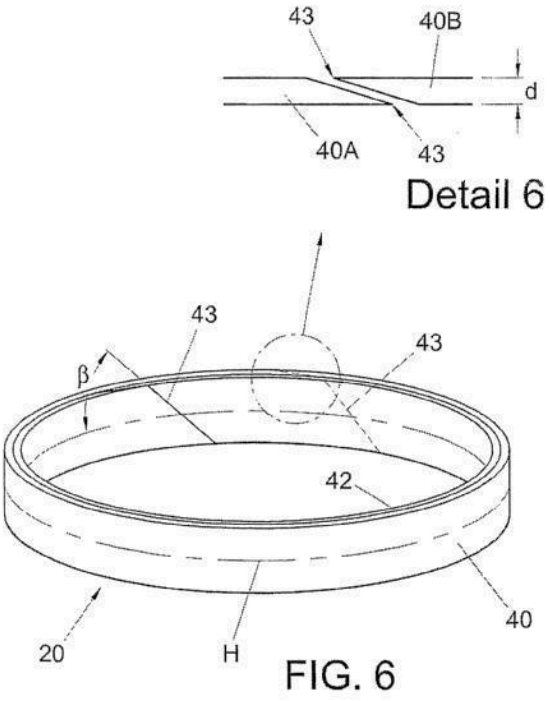

FIG. 6

References

Informative references

Attention is drawn to the following places, which may be of interest for search:

Joining belts by sewing, sticking, vulcanishing, or the like; Constructional adaptations of the belt ends for this purpose	F16G 3/10

B29C 66/4329

{the joint lines being transversal but non-orthogonal with respect to the axis of said tubular articles, i.e. being oblique}

Definition statement

This place covers:

Example 1, from

JP10016058:

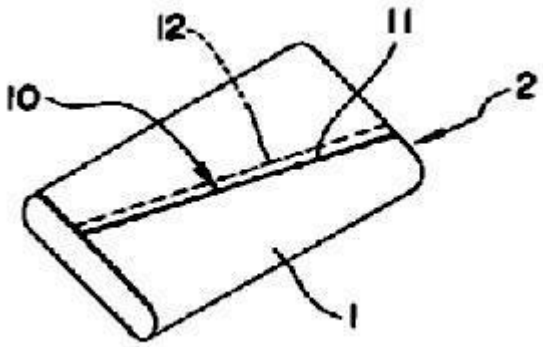

B29C 66/433

{Casing-in, i.e. enclosing an element between two sheets by an outlined seam (for bookbinding B42C 11/06; for packaging B65B; by laminating B32B 37/00; enclosing tubular articles between substantially flat elements B29C 66/53261)}

Definition statement

This place covers:

Example 1, from

US2010037564:

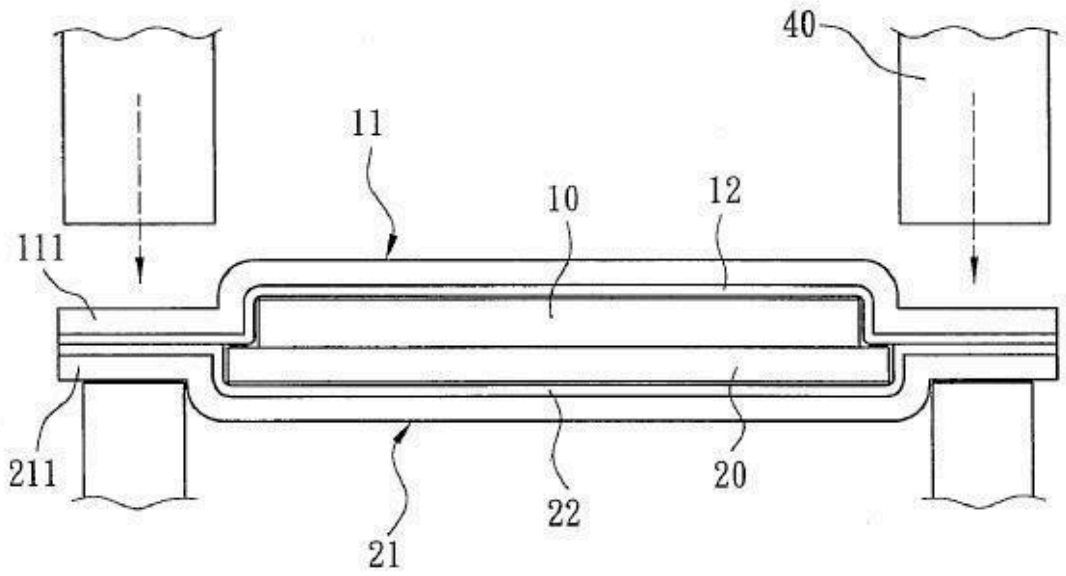

References

Informative references

Attention is drawn to the following places, which may be of interest for search:

Articles or materials enclosed between two opposed sheets or blanks having their margins united, e.g. by heat-sealing or welding	B65D 75/30
Flat or ribbon cables comprising parallel wires, sandwiched between two insulating layers	H01B 7/0838

B29C 66/4332

{by folding a sheet over}

Definition statement

This place covers:

Example 1, from

EP1240995:

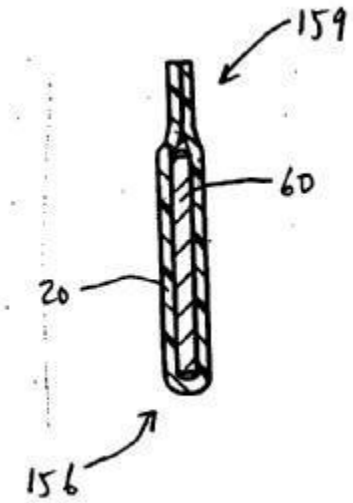

References

Informative references

Attention is drawn to the following places, which may be of interest for search:

Articles or materials wholly enclosed in sheets or blanks doubled around contents and having their opposed free margins united, e.g. by heat-sealing or welding	B65D 75/20

B29C 66/4342

{Joining substantially flat articles for forming corner connections, e.g. for making V-shaped pieces}

Definition statement

This place covers:

Example 1, from

DE19748616:

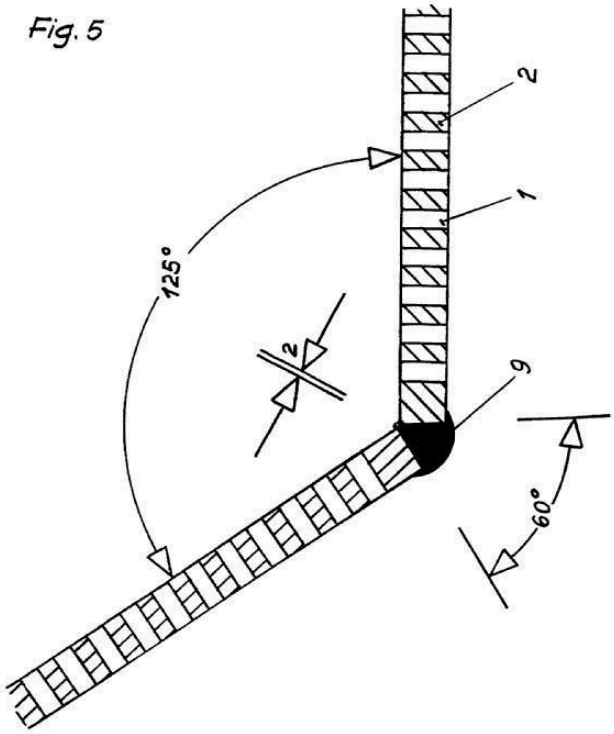

B29C 66/43421

{with a right angle, e.g. for making L-shaped pieces}

Definition statement

This place covers:

Example 1, from

FR2919819:

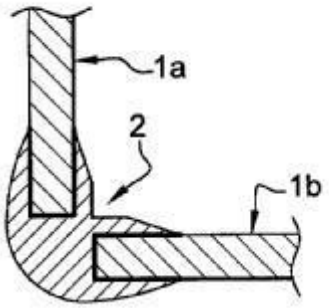

Fig. 5b

B29C 66/4344

{Joining substantially flat articles for forming fork connections, e.g. for making Y-shaped pieces}

Definition statement

This place covers:

Example 1, from

WO0216784:

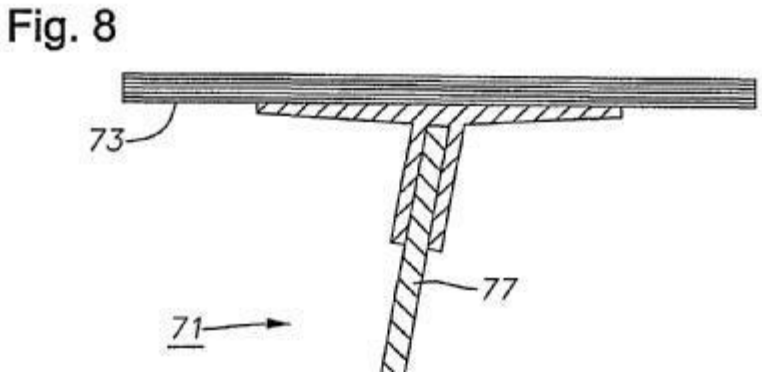

B29C 66/43441

{with two right angles, e.g. for making T-shaped pieces, H-shaped pieces}

Definition statement

This place covers:

Example 1, from

FR2919819:

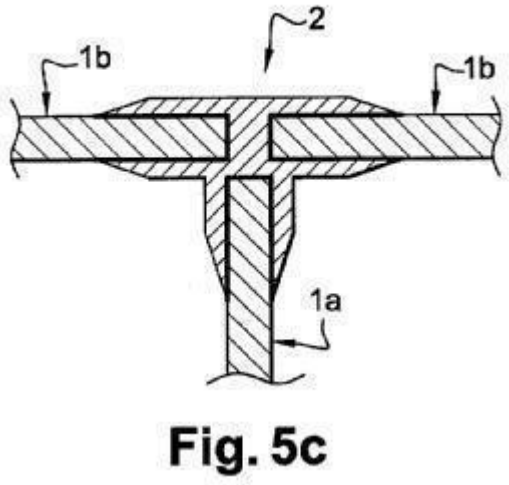

Example 2, from

FR2919819:

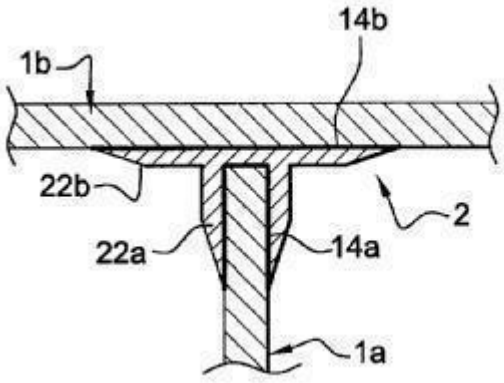

Fig. 5e

Example 3, from

WO0216784:

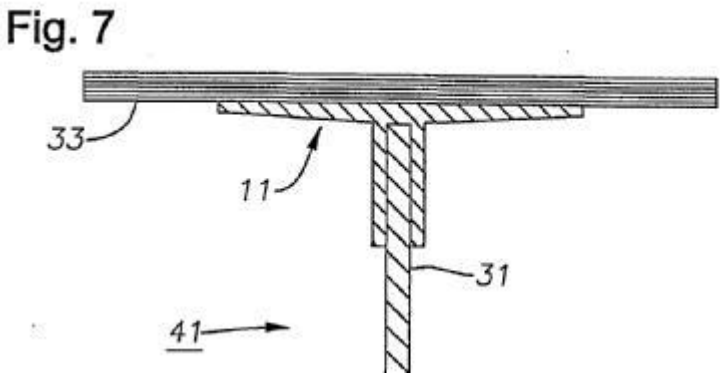

B29C 66/43461

{with four right angles, e.g. for making +-shaped pieces}

Definition statement

This place covers:

Example 1, from

FR2919819:

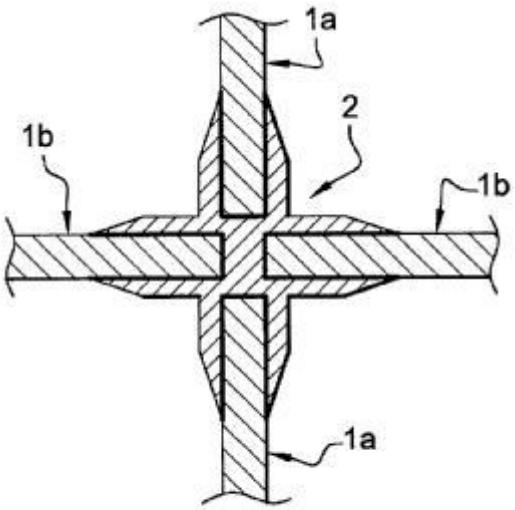

Fig. 5d

B29C 66/435

{Making large sheets by joining smaller ones or strips together}

Definition statement

This place covers:

Example 1, from

EP2123515:

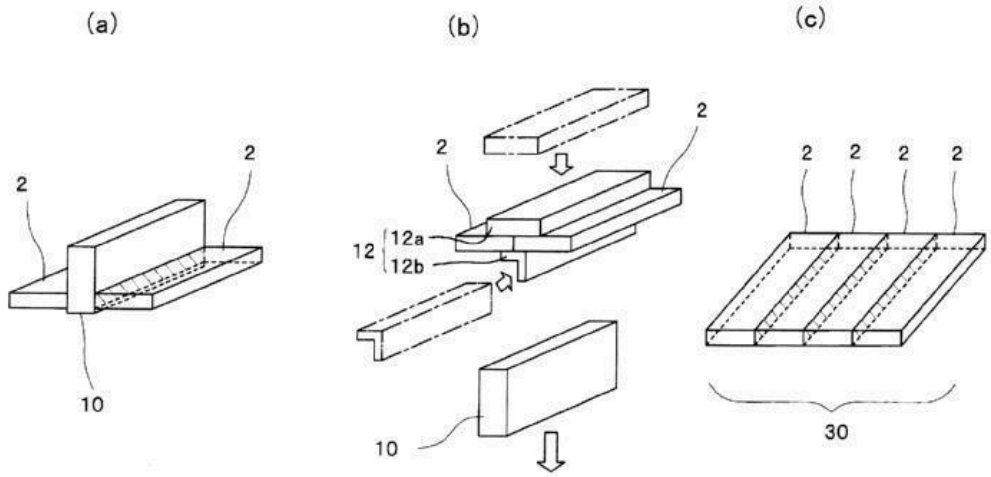

B29C 66/436

{Joining sheets for making articles comprising cushioning or padding materials, the weld being performed through the cushioning material, e.g. car seats (joining through openings B29C 66/304)}

Definition statement

This place covers:

Example 1, from

WO2009133508:

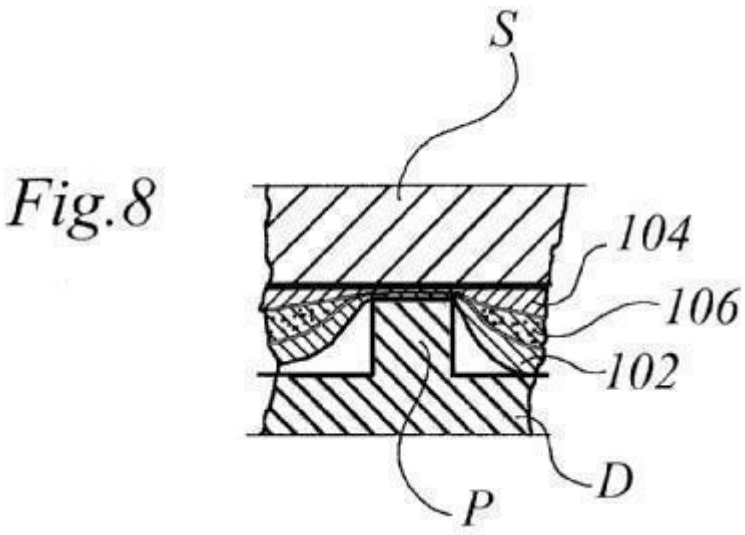

Example 2, from

WO2005097474:

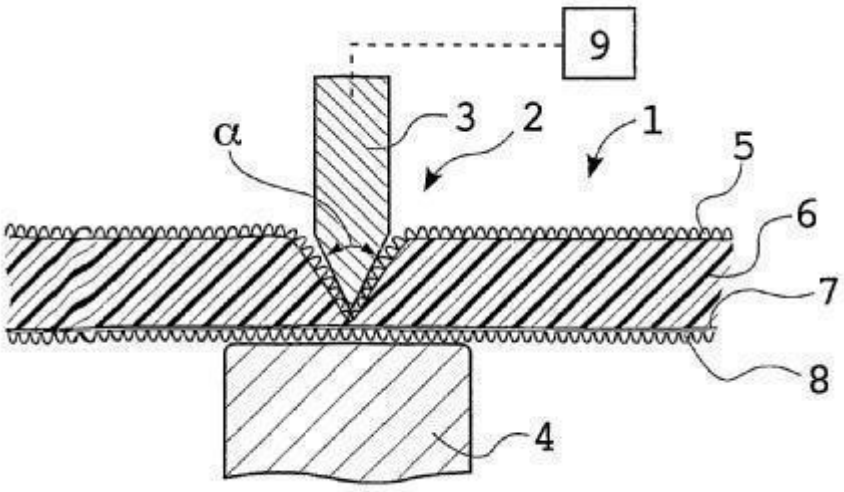

Example 3, from

GB2389560:

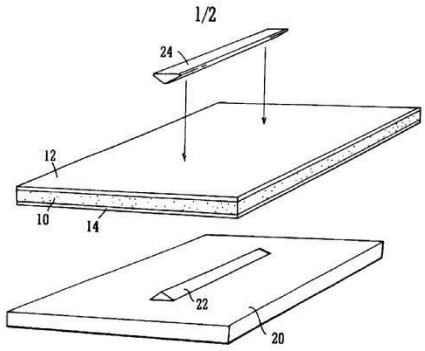

FIG. 1

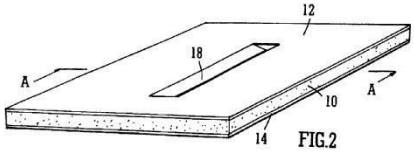

FIG.2

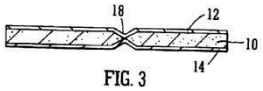

FIG. 3

B29C 66/437

{Joining plastics plates for making venetian blinds (making venetian blinds in general E06B 9/266)}

Definition statement

This place covers:

Example 1, from

DE19753716:

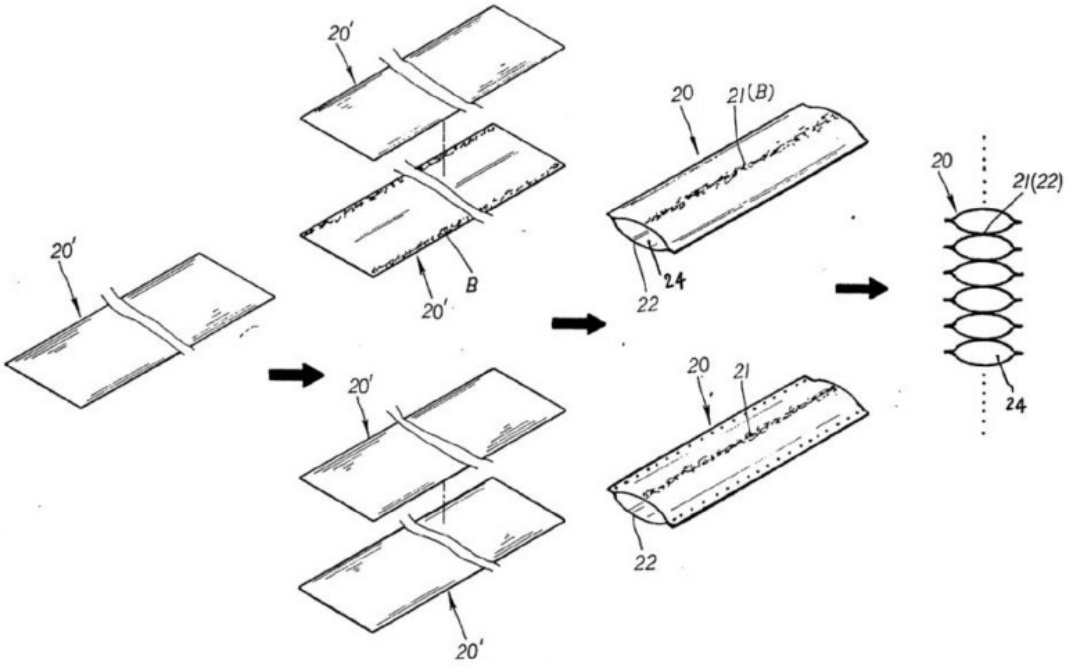

FIG. 1

References

Informative references

Attention is drawn to the following places, which may be of interest for search:

Making honeycombed structures for window coverings	B31D 3/0215

B29C 66/438

{Joining sheets for making hollow-walled, channelled structures or multi-tubular articles}

Definition statement

This place covers:

Example 1, from

FR2929549:

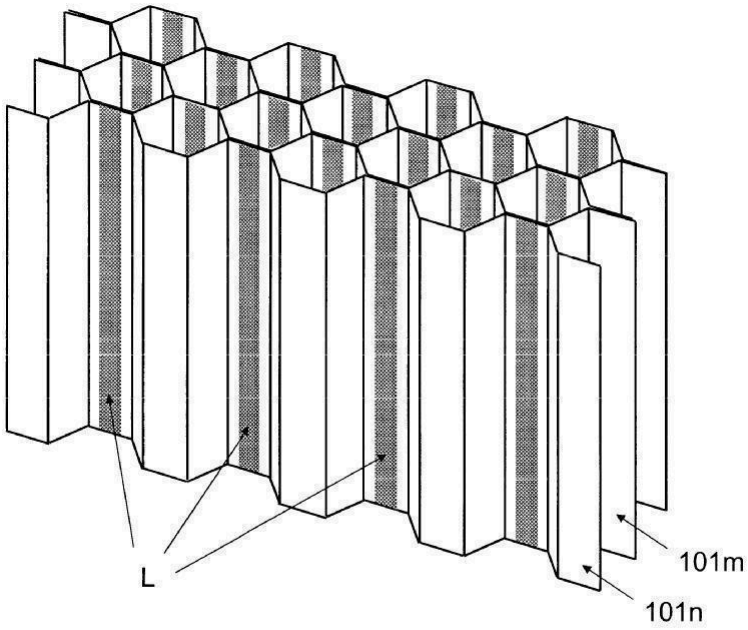

FIG. 13

Example 2, from

DE4426097:

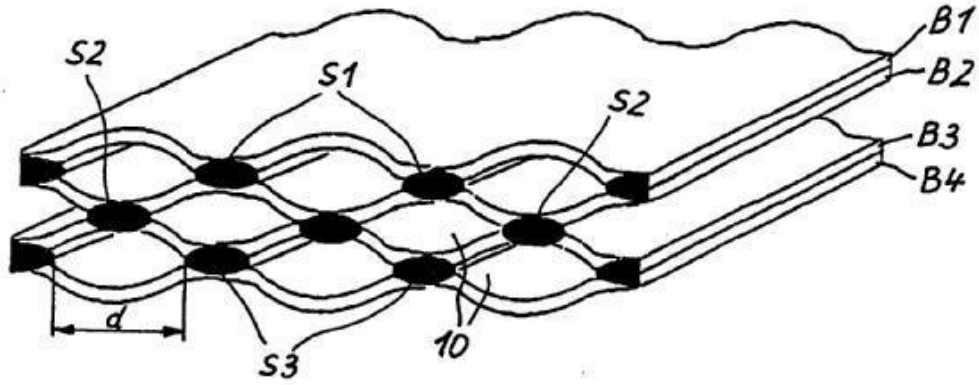

FIG. 4b

B29C 66/439

{Joining sheets for making inflated articles without using a mould}

Definition statement

This place covers:

Example 1, from

CA2654675:

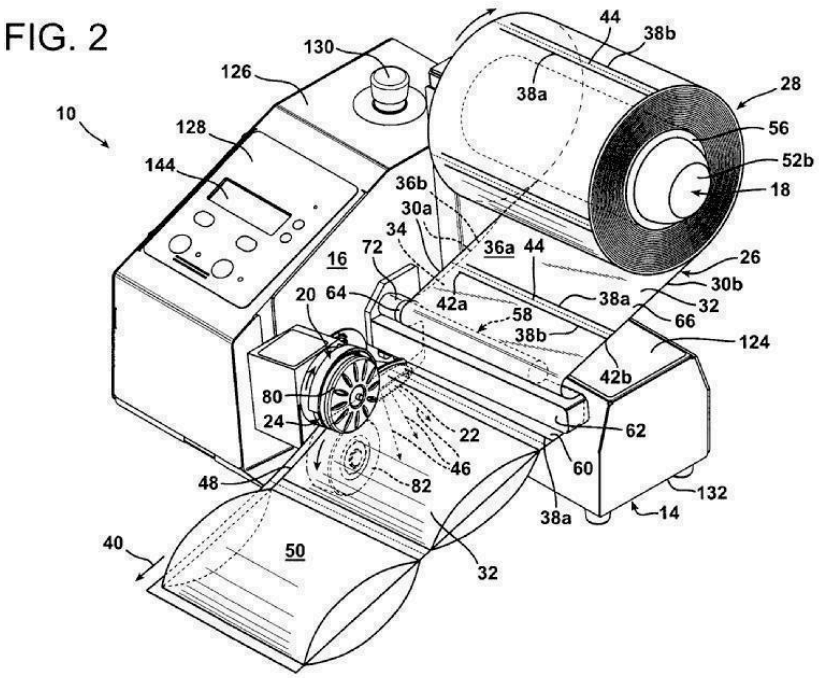

Example 2, from

US2008250753:

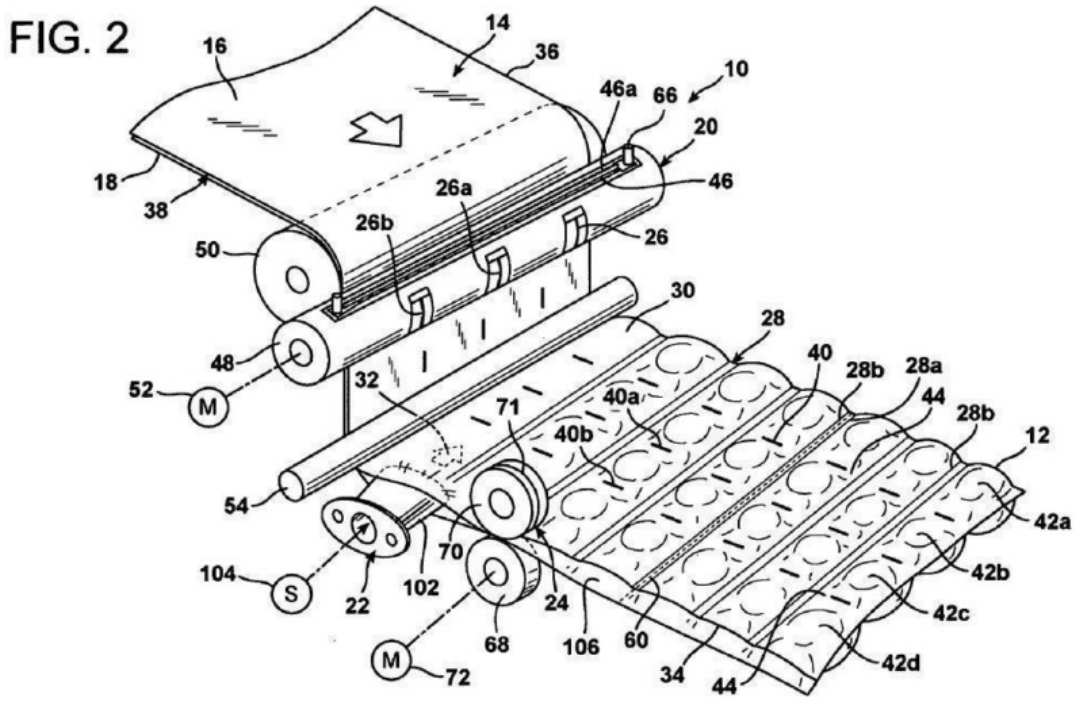

Example 3, from

US2006218880:

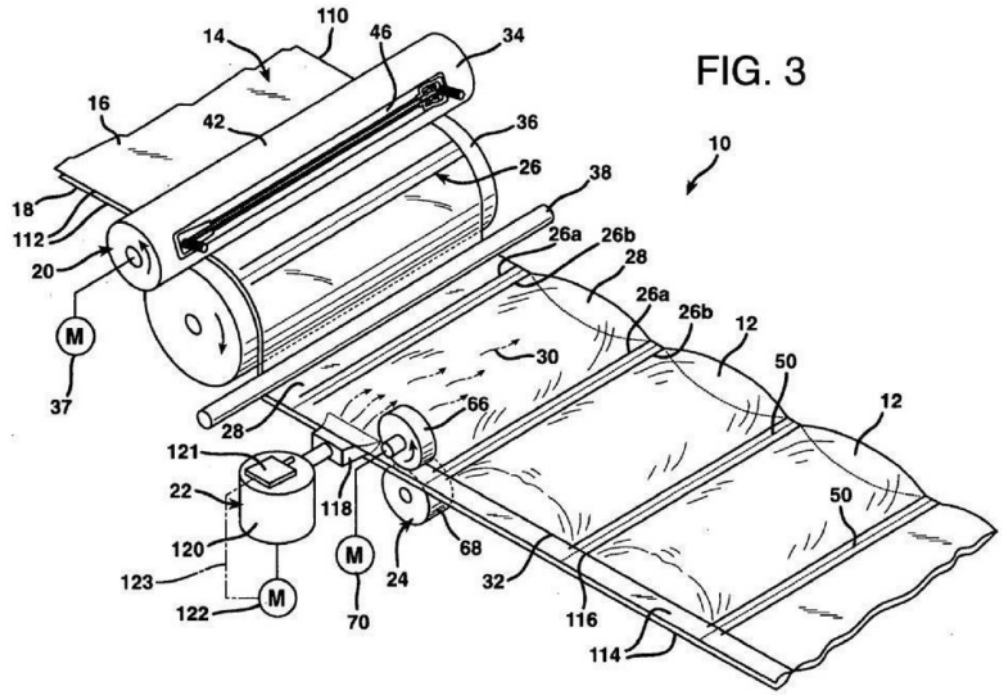

B29C 66/45

{Joining of substantially the whole surface of the articles (methods or apparatus for laminating B32B 37/00)}

Definition statement

This place covers:

Example 1, from

WO03082548:

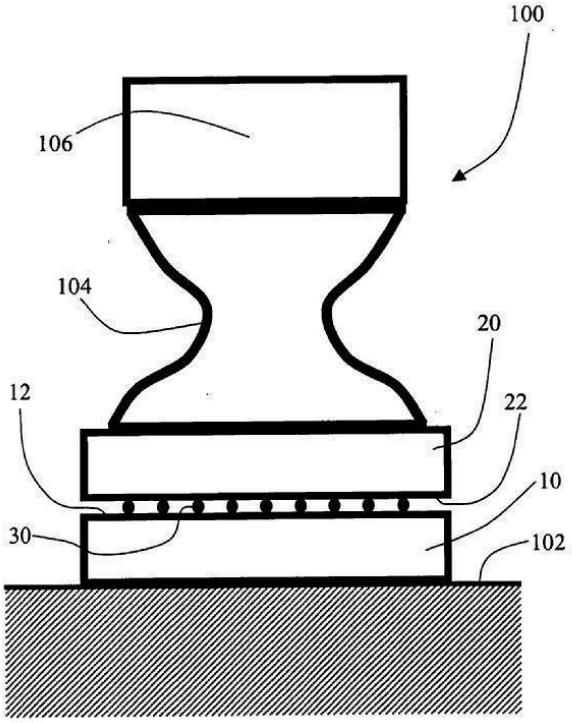

Example 2, from

FR2584336:

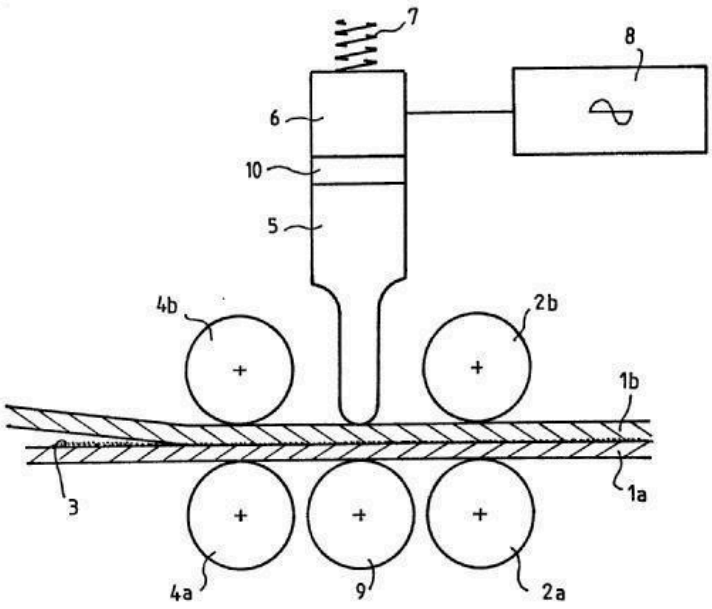

References

Informative references

Attention is drawn to the following places, which may be of interest for search:

Forming webs by bringing together several webs for manufacturing absorbent pads	A61F 13/15699

B29C 66/452

{the article having a disc form, e.g. making CDs or DVDs}

Definition statement

This place covers:

Example 1, from

US2008283192:

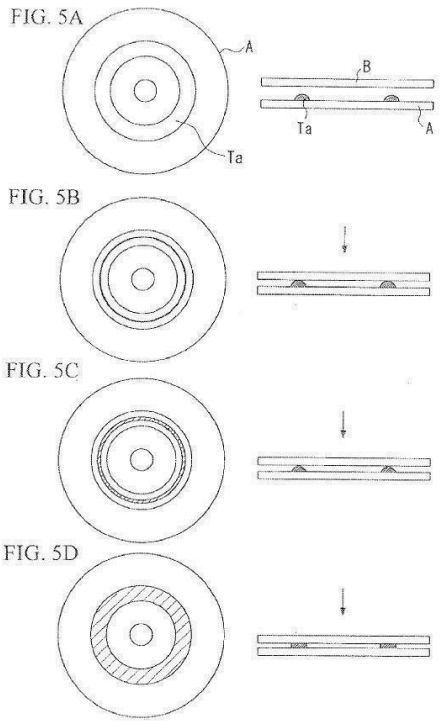

Example 2, from

US2009040913:

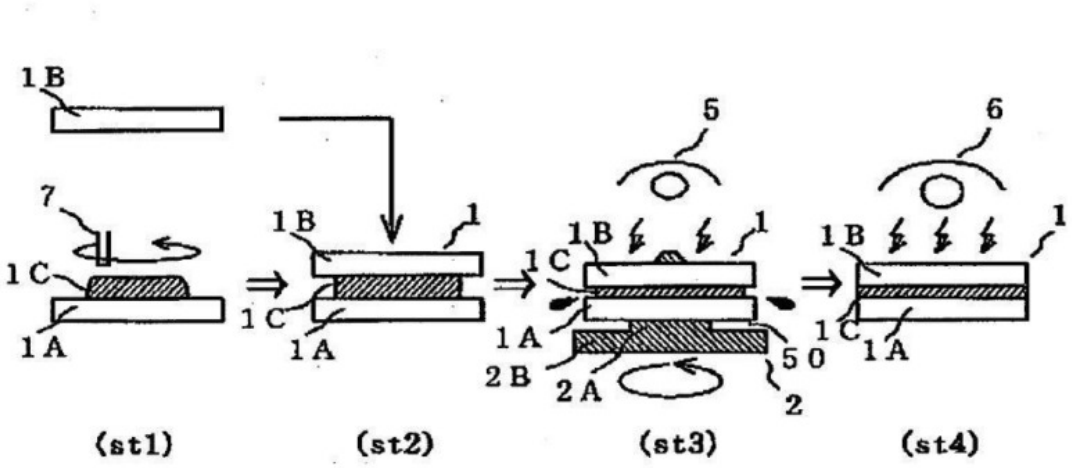

References

Informative references

Attention is drawn to the following places, which may be of interest for search:

Producing carriers of records containing fine grooves or impressions, e.g. disc records, by combined operations	B29D 17/00
Producing optically read record carriers, e.g. optical discs by combined operations	B29D 17/005
Apparatus or processes specially adapted for the manufacture of record carriers	G11B 7/26

B29C 66/47

{Joining single elements to sheets, plates or other substantially flat surfaces (B29C 66/5326 takes precedence)}

Definition statement

This place covers:

Example 1, from

JP2005279990:

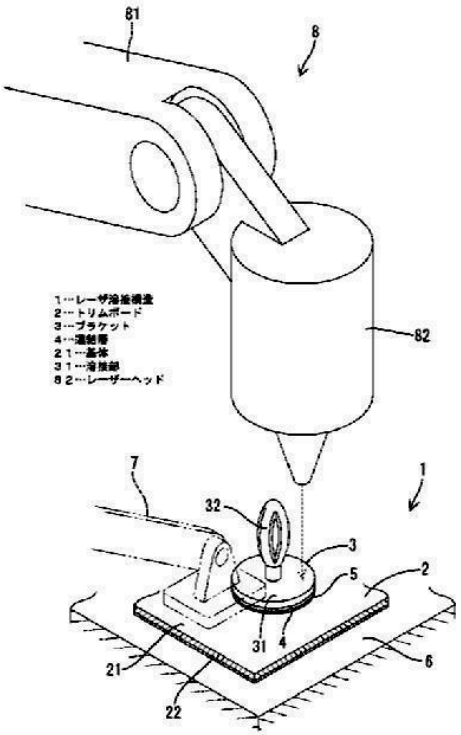

References

Informative references

Attention is drawn to the following places, which may be of interest for search:

Devices for fastening nuts to surfaces, e.g. sheets, plates, by means of welding or riveting	F16B 37/06

B29C 66/472

{said single elements being substantially flat}

Definition statement

This place covers:

Example 1, from

JP4216382:

【図７】

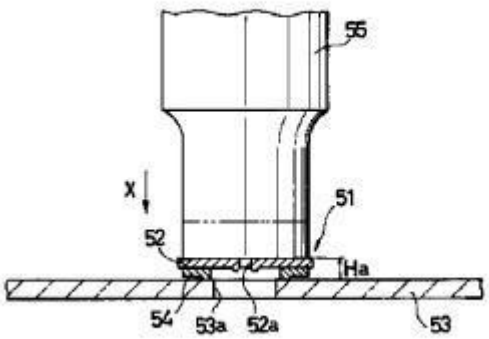

References

Informative references

Attention is drawn to the following places, which may be of interest for search:

Devices for applying ribbons to babies' napkins, e.g. diapers	A61F 13/15593

B29C 66/4722

{Fixing strips to surfaces other than edge faces (fixing strips to edge faces B29C 63/0026)}

Definition statement

This place covers:

Example 1, from

EP0395836:

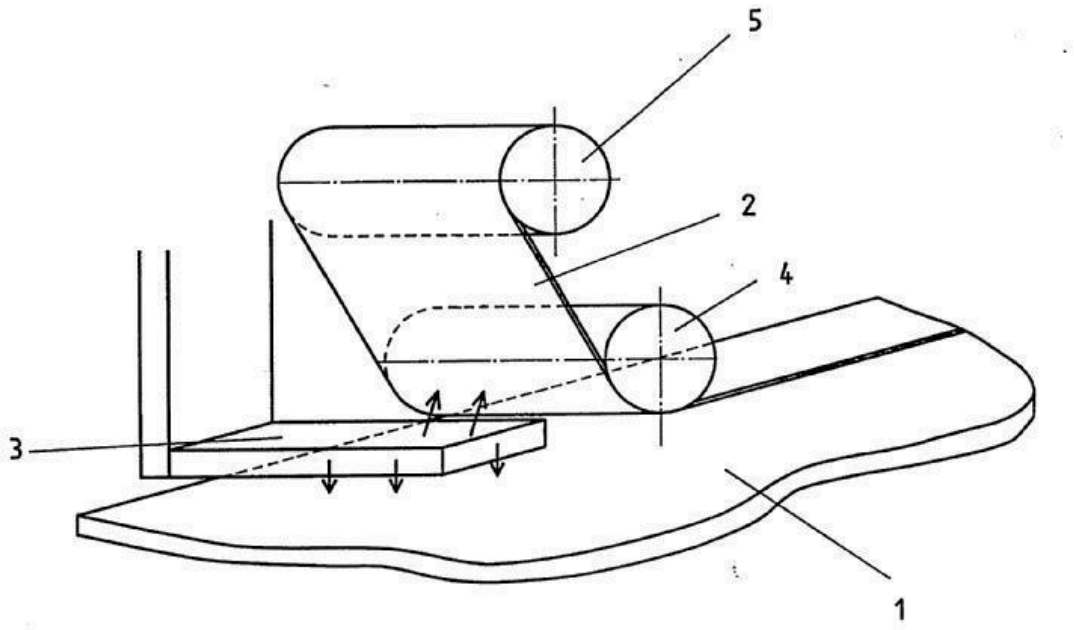

B29C 66/4724

{said single elements being appliques, e.g. in the form of a text or drawing}

Definition statement

This place covers:

Example 1, from

JP2233230:

第 1 図

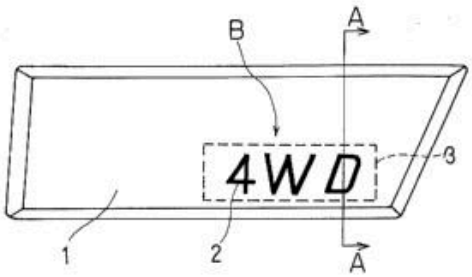

第 2 図

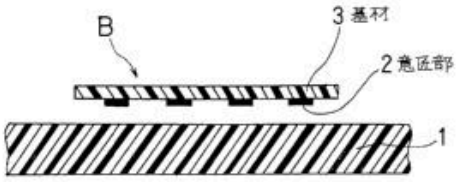

第 3 図

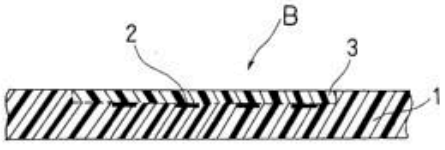

B29C 66/4742

{said single elements being spouts}

References

Informative references

Attention is drawn to the following places, which may be of interest for search:

Non-integral spouts connected to a planar surface of the wall of packages, said packages comprising articles or materials enclosed in strips, sheets, blanks, tubes, or webs of flexible sheet material	B65D 75/5877

B29C 66/47421

{said spouts comprising flanges}

Definition statement

This place covers:

Example 1, from

US3231444:

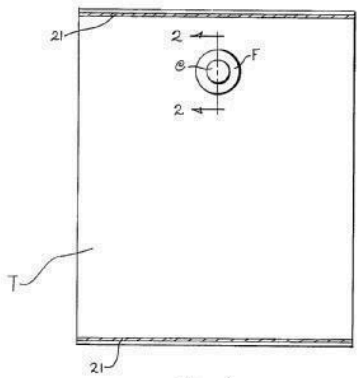

Fig. 1

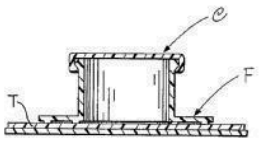

Fig. 2

B29C 66/49

{Internally supporting the, e.g. tubular, article during joining (B29C 66/63 takes precedence)}

Definition statement

This place covers:

Example 1, from

DE2922834:

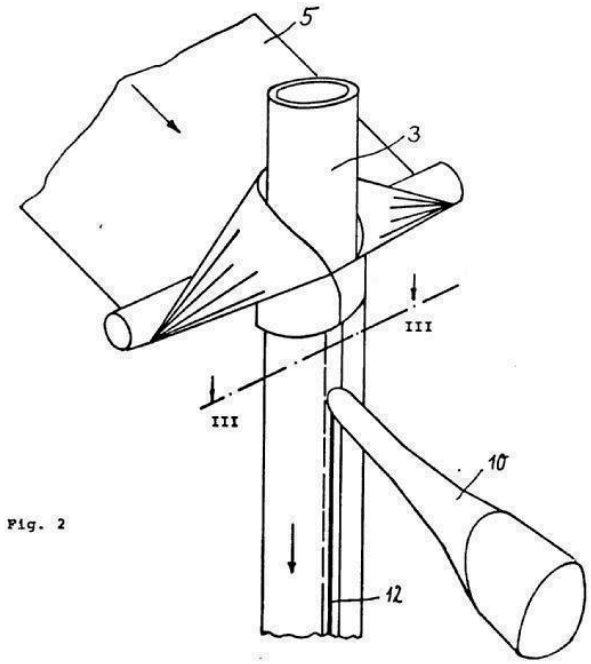

Fig. 2

Example 2, from

EP2360007:

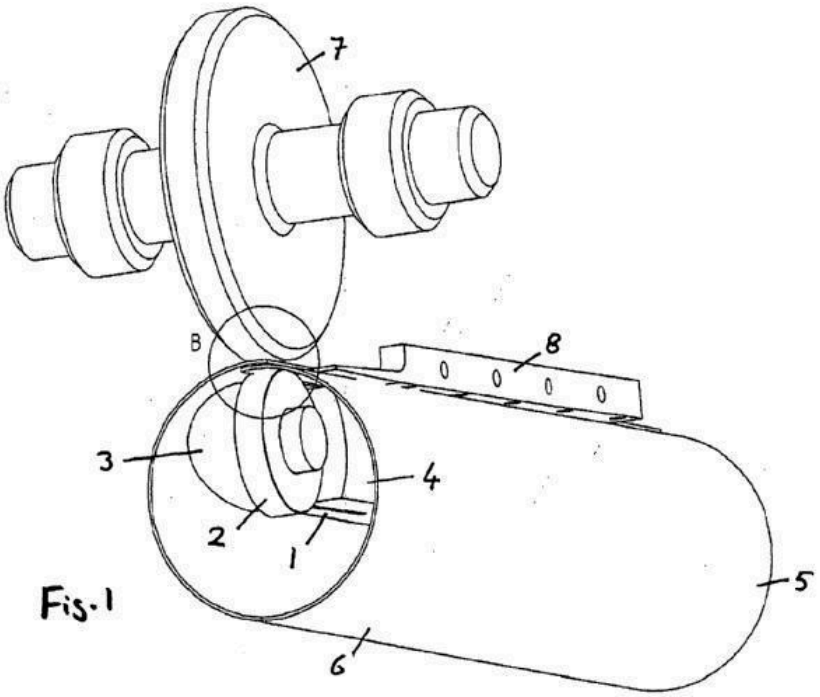

B29C 66/492

{using a fluid}

Definition statement

This place covers:

Example 1, from

US2007079924:

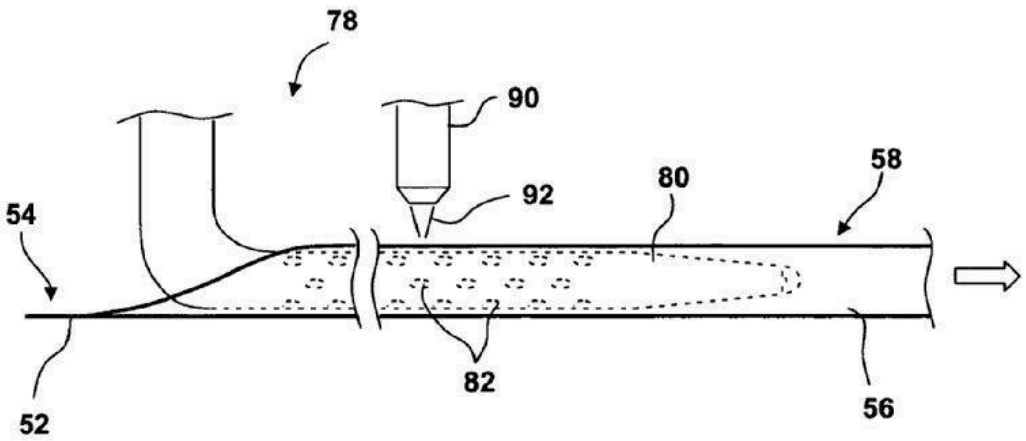

FIG. 9

B29C 66/50

{General aspects of joining tubular articles; General aspects of joining long products, i.e. bars or profiled elements; General aspects of joining single elements to tubular articles, hollow articles or bars; General aspects of joining several hollow-preforms to form hollow or tubular articles}

References

Informative references

Attention is drawn to the following places, which may be of interest for search:

Connections of rods or tubes in general	F16B 7/00
Non-disconnectable couplings for attachment of a member on a shaft or on a shaft-end involving gluing, welding or the like	F16D 1/068

B29C 66/522

{Joining tubular articles (B29C 66/53241 takes precedence)}

References

Informative references

Attention is drawn to the following places, which may be of interest for search:

Connecting a tube to a hub for making catheters or medical or surgical tubes	A61M 25/0014
Plastic pipe welded joints; Plastic pipe adhesive joints	F16L 47/02

B29C 66/5221

{for forming coaxial connections, i.e. the tubular articles to be joined forming a zero angle relative to each other}

Definition statement

This place covers:

Example 1, from

WO9415137:

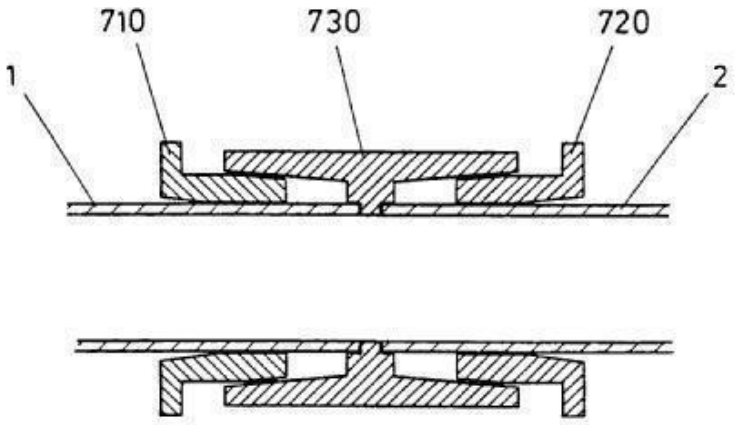

FIG. 10

Example 2, from

US5793017:

FIG. 20 (a)

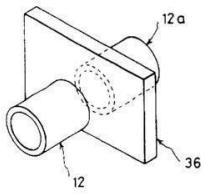

FIG. 20 (b)

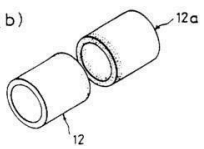

FIG. 20 (c)

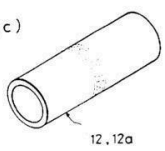

B29C 66/5223

{for forming corner connections or elbows, e.g. for making V-shaped pieces}

Definition statement

This place covers:

Example 1, from

EP0382971:

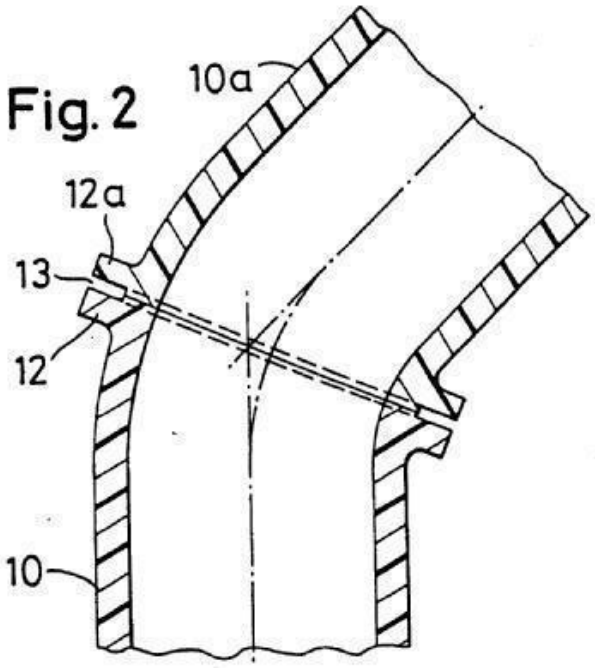

Example 2, from

EP0141450:

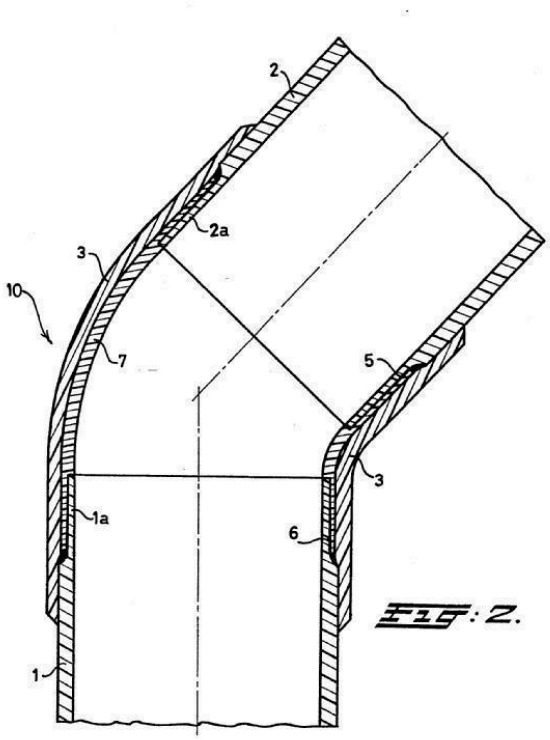

Fig. 2.

B29C 66/52231

{with a right angle, e.g. for making L-shaped pieces}

Definition statement

This place covers:

Example 1, from

WO9415137:

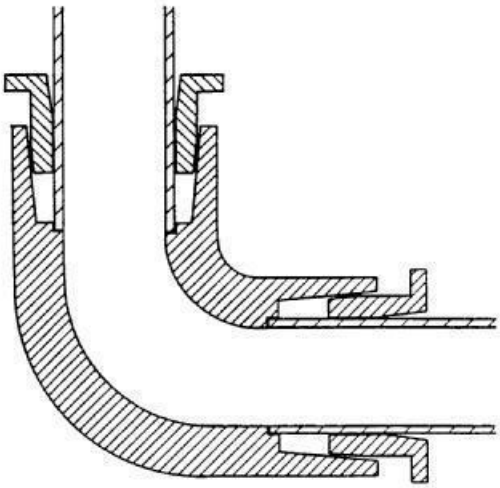

FIG. 12

Example 2, from

EP0141450:

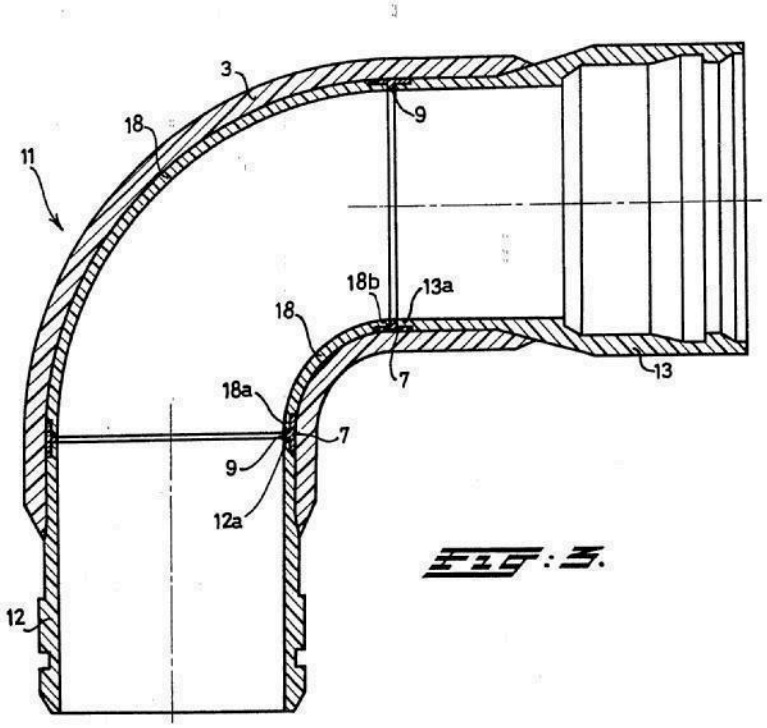

Fig. 3.

B29C 66/5224

{for forming fork-shaped connections, e.g. for making Y-shaped pieces}

Definition statement

This place covers:

Example 1, from

WO9415137:

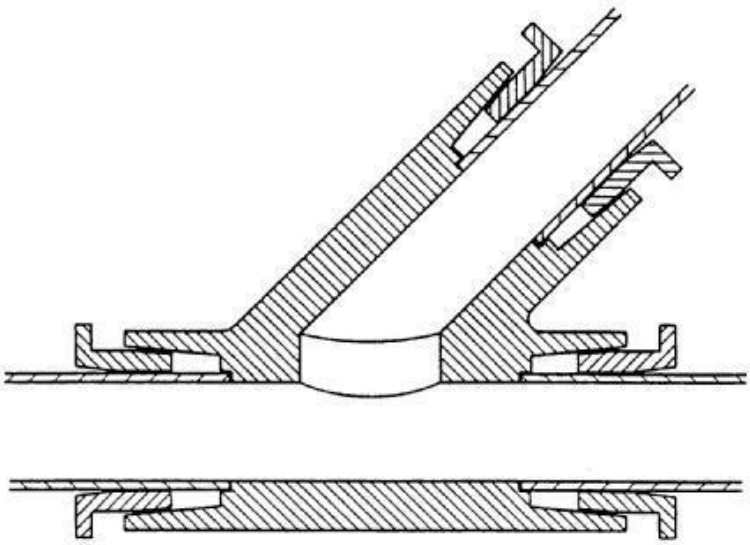

FIG. 14

Example 2, from

US3873391:

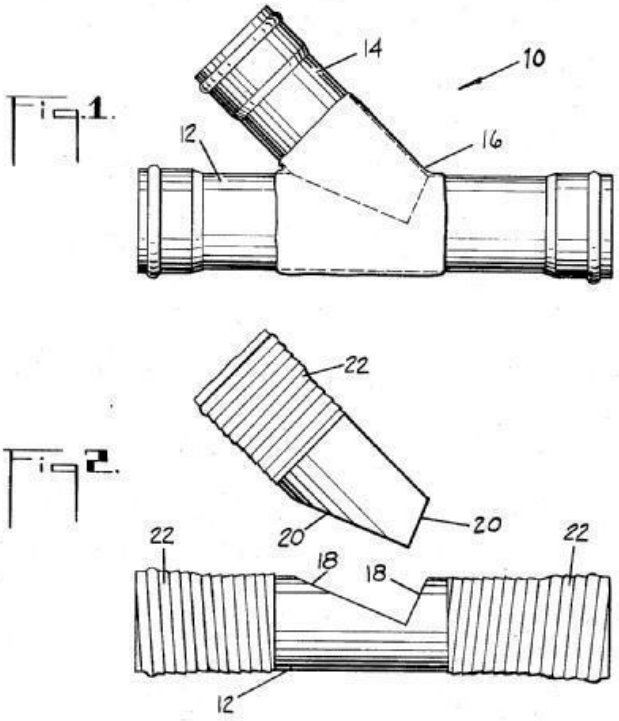

B29C 66/52241

{with two right angles, e.g. for making T-shaped pieces}

Definition statement

This place covers:

Example 1, from

WO9415137:

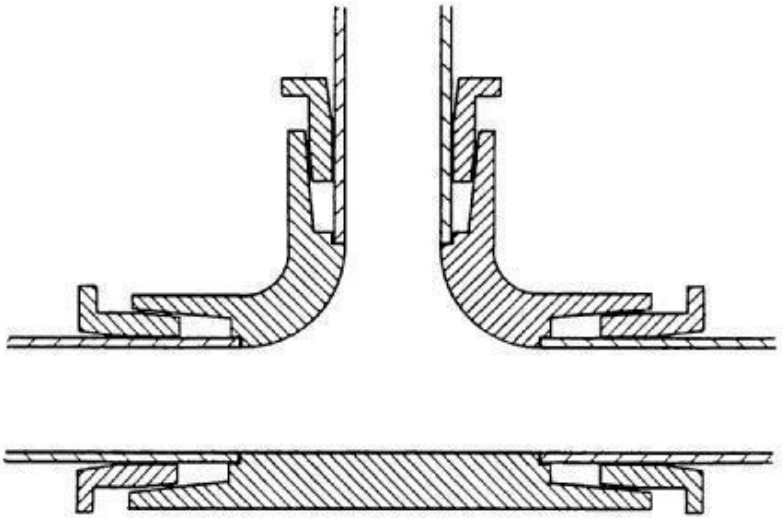

FIG. 13

Example 2, from

CH398211:

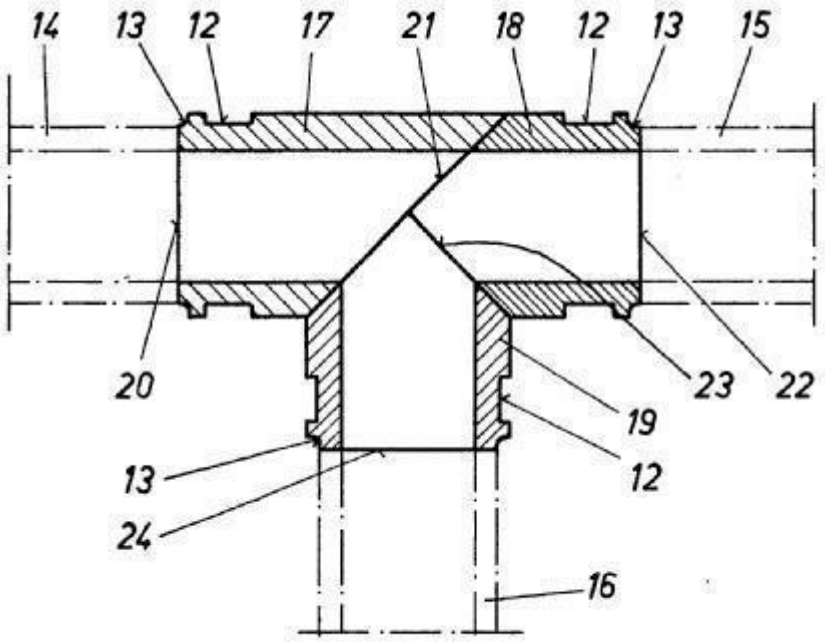

Example 3, from

FR2596133:

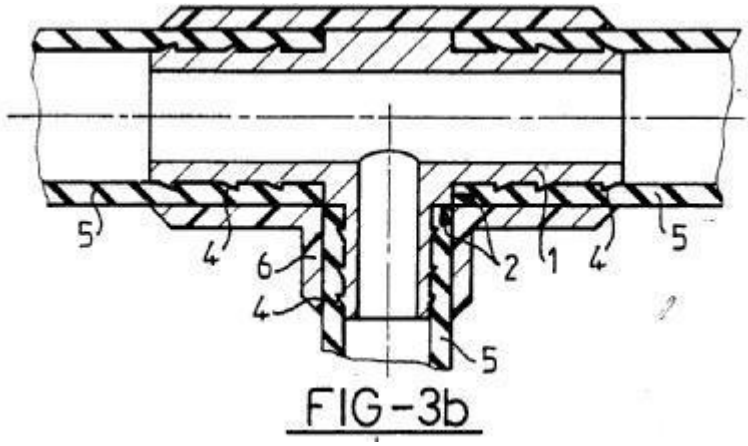

FIG-3b

B29C 66/5225

{for forming cross-shaped connections, e.g. for making X-shaped pieces}

Definition statement

This place covers:

Example 1, from

WO9415137:

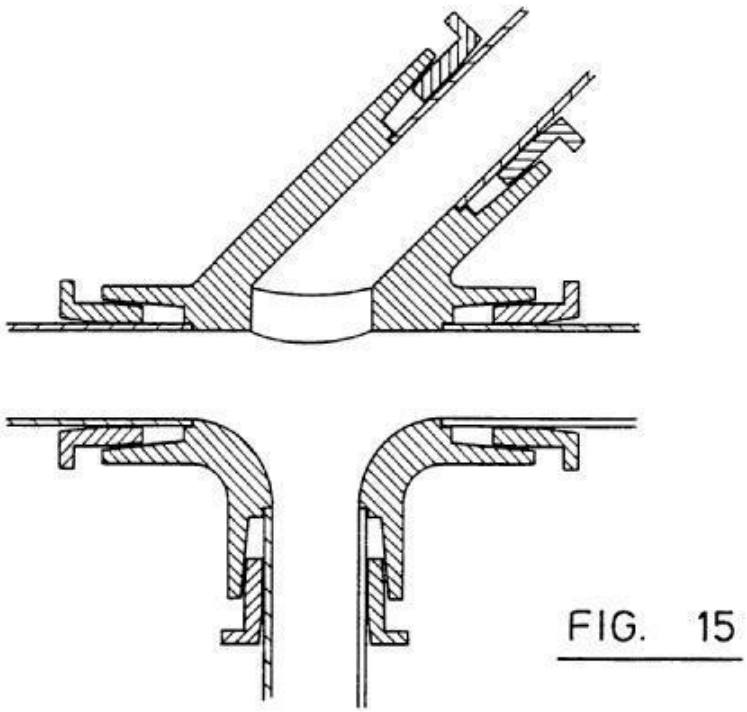

FIG. 15

B29C 66/52251

{with four right angles, e.g. for making +-shaped pieces}

Definition statement

This place covers:

Example 1, from

WO9415137:

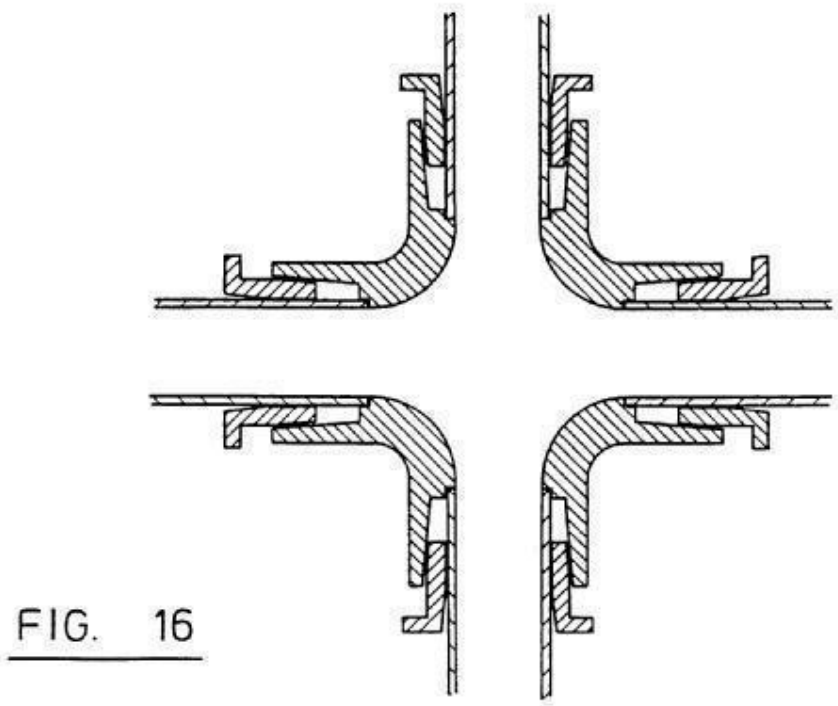

Example 2, from

FR2596133:

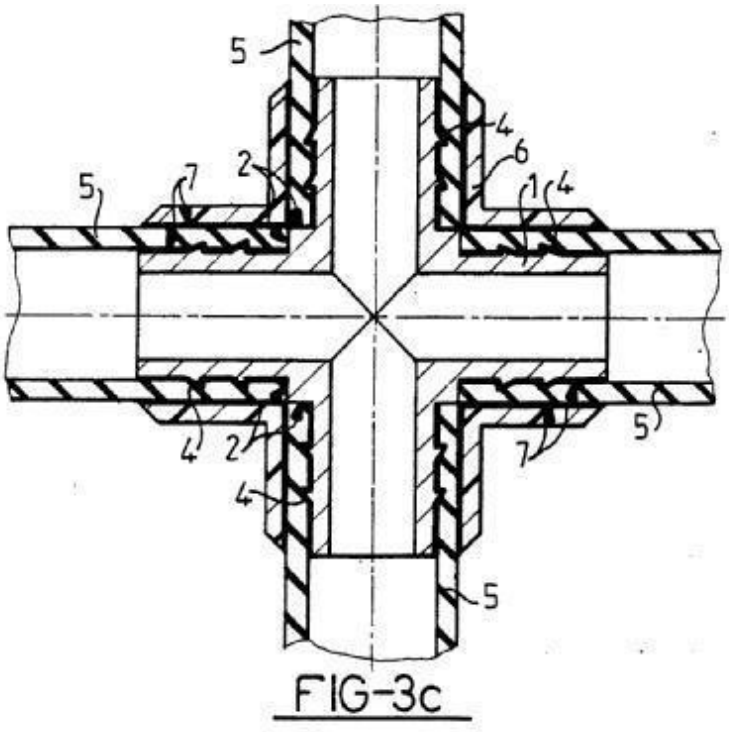

FIG-3c

B29C 66/5227

{for forming multi-tubular articles by longitudinally joining elementary tubular articles wall-to-wall (e.g. joining the wall of a first tubular article to the wall of a second tubular article) or for forming multilayer tubular articles}

Definition statement

This place covers:

Example 1, from

JP2001179839:

【図１】

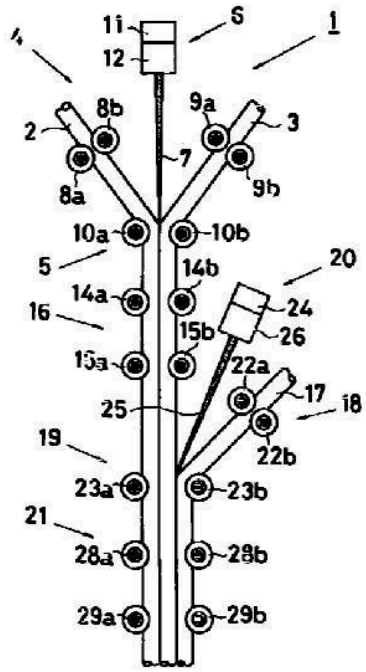

【図２】



【図３】

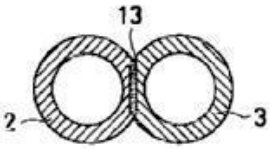

【図４】

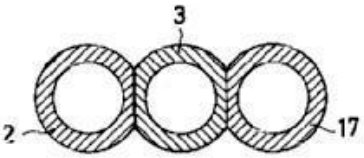

【図５】

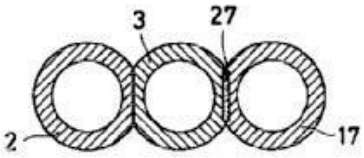

B29C 66/52271

{one tubular article being placed inside the other}

Definition statement

This place covers:

Example 1, from

EP2065168:

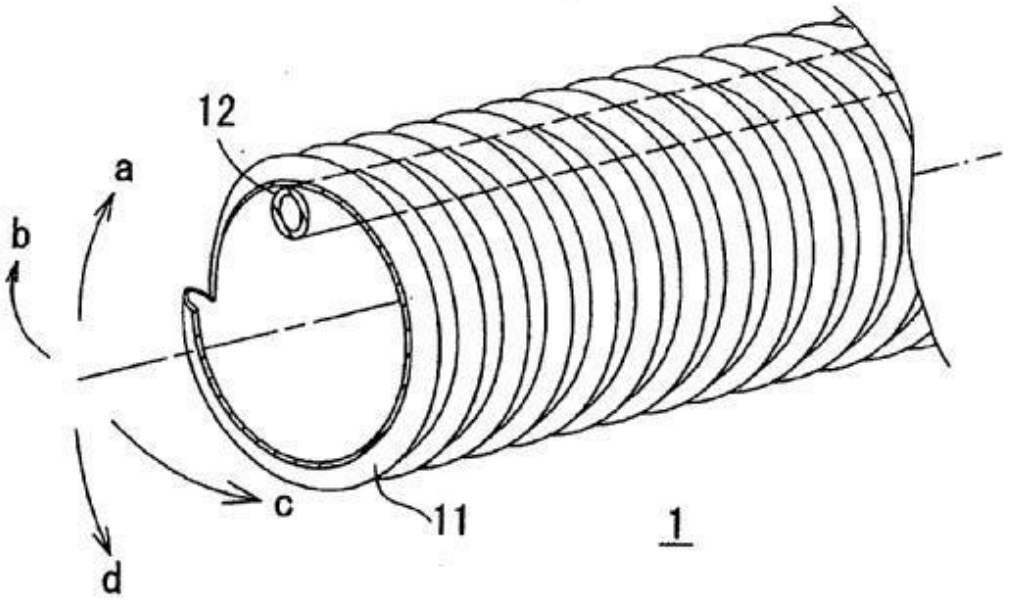

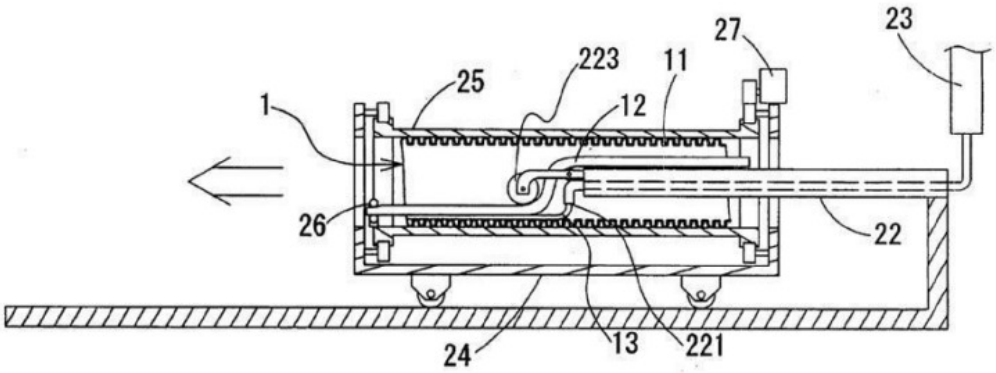

B29C 66/52272

{concentrically, e.g. for forming multilayer tubular articles}

Definition statement

This place covers:

Example 1, from

EP0406818:

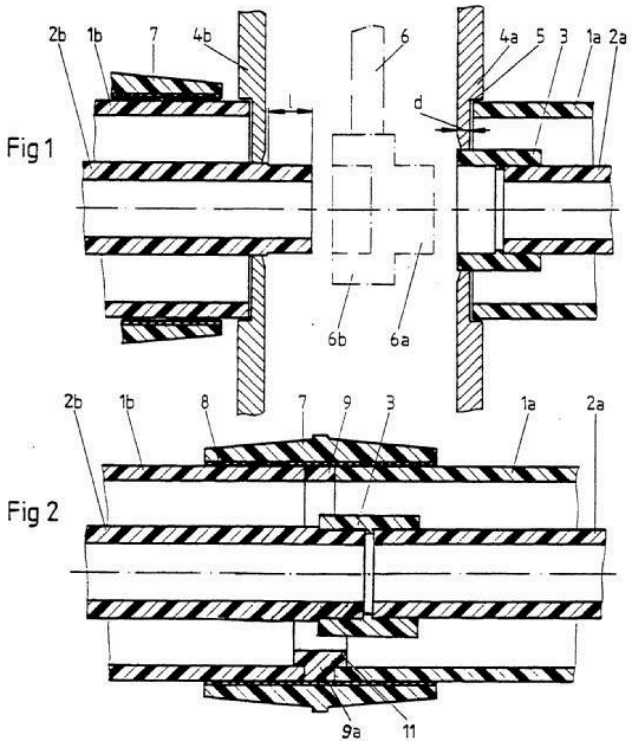

B29C 66/5229

{involving the use of a socket}

Definition statement

This place covers:

Example 1, from

JP2001050464:

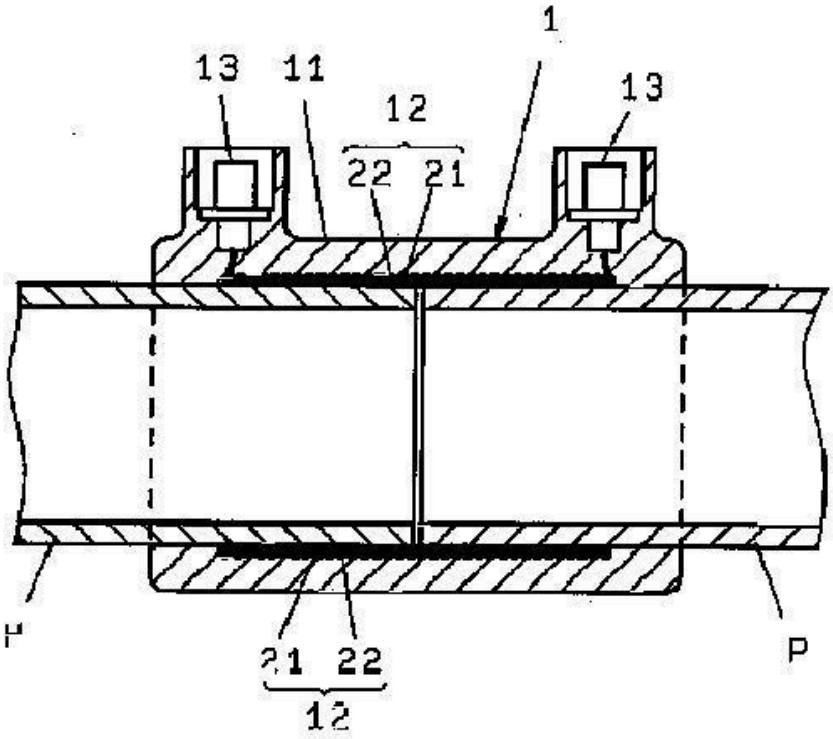

B29C 66/52292

{said stop being internal}

Definition statement

This place covers:

Example 1, from

JP55093411:

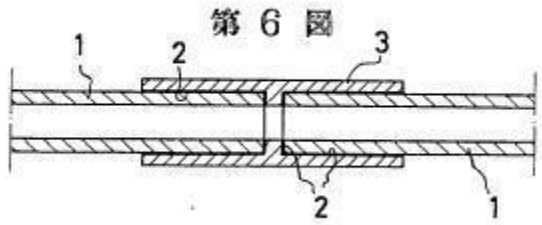

B29C 66/52293

{said stop being external}

Definition statement

This place covers:

Example 2, from

JP55093411:

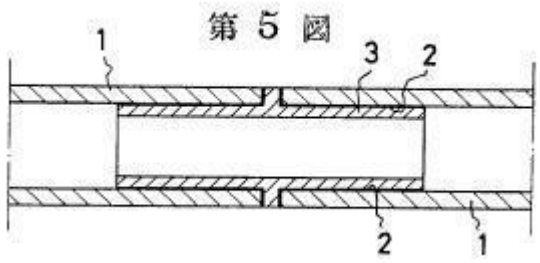

B29C 66/52294

{said stop being heated}

Definition statement

This place covers:

Example 1, from

DE19628916:

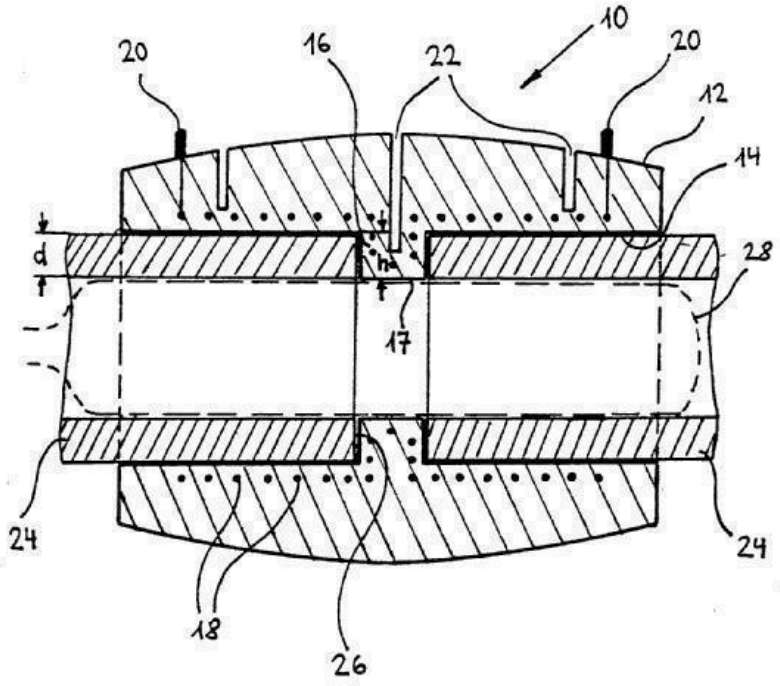

Example 2, from

JP10281383:

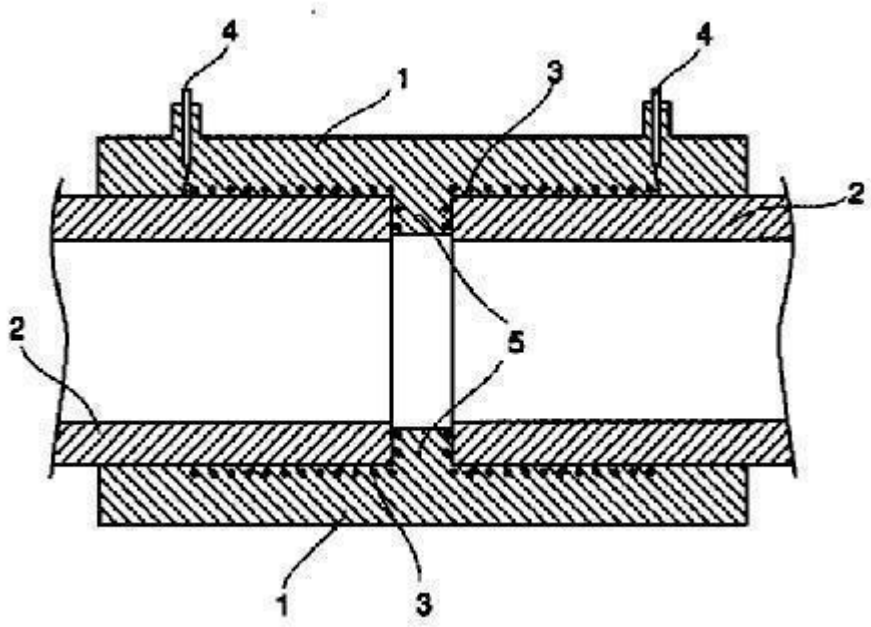

Example 3, from

JP5318596:

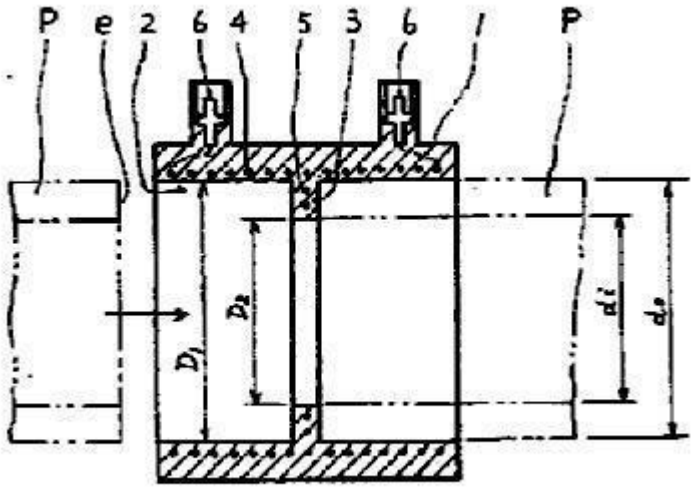

B29C 66/52295

{said socket comprising reinforcements}

Definition statement

This place covers:

Example 1, from

DE9208024U:

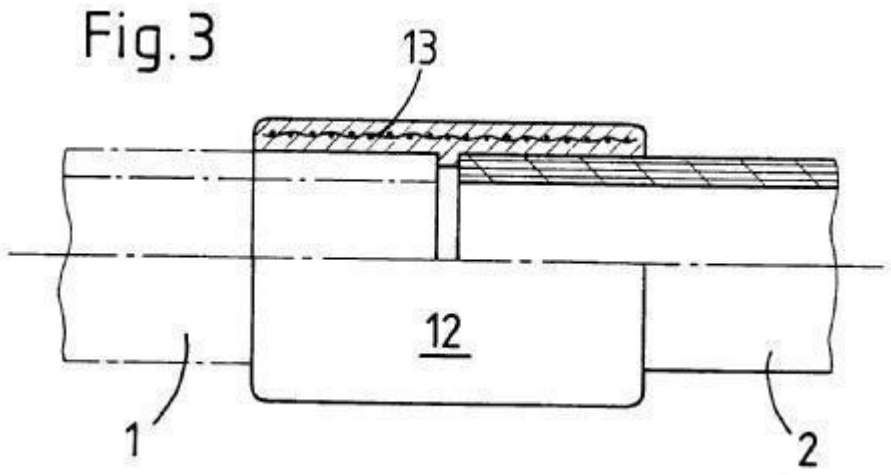

Example 2, from

WO0106168:

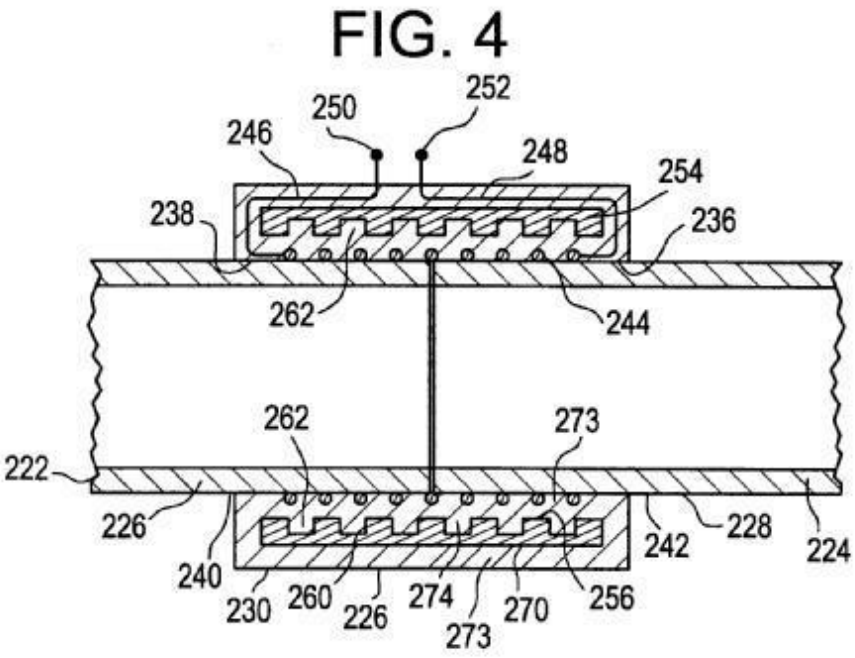

B29C 66/52296

{said socket comprising sealing elements, e.g. gaskets}

Definition statement

This place covers:

Example 1, from

JP4171392:

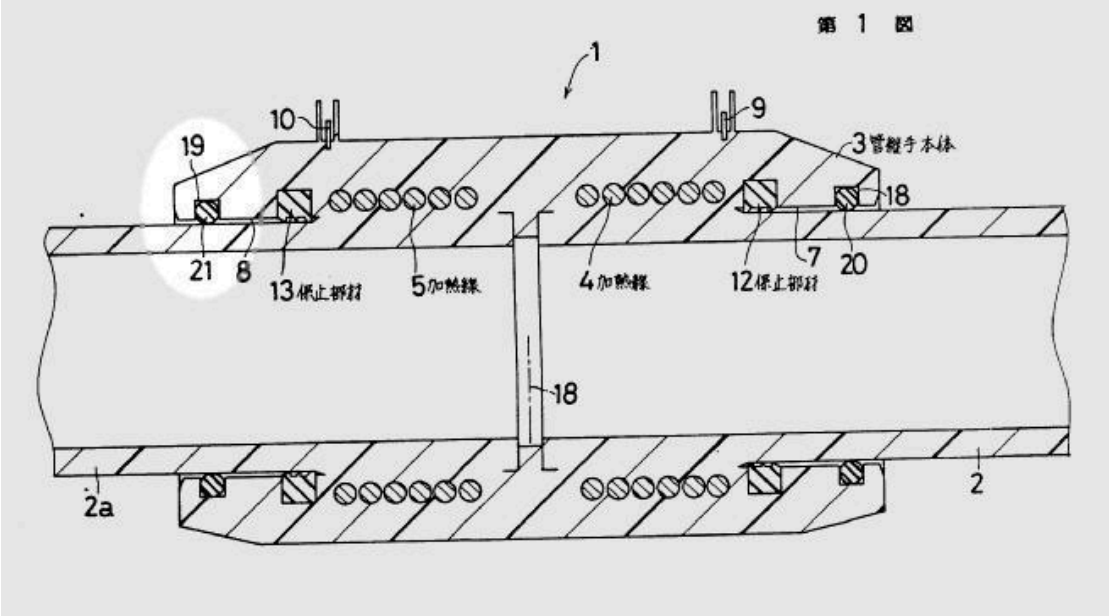

References

Informative references

Attention is drawn to the following places, which may be of interest for search:

Sealing elements in general	F16J 15/00

B29C 66/52297

{said socket comprising slip-off prevention means (B29C 66/52296 takes precedence)}

Definition statement

This place covers:

Example 1, from

JP4171392:

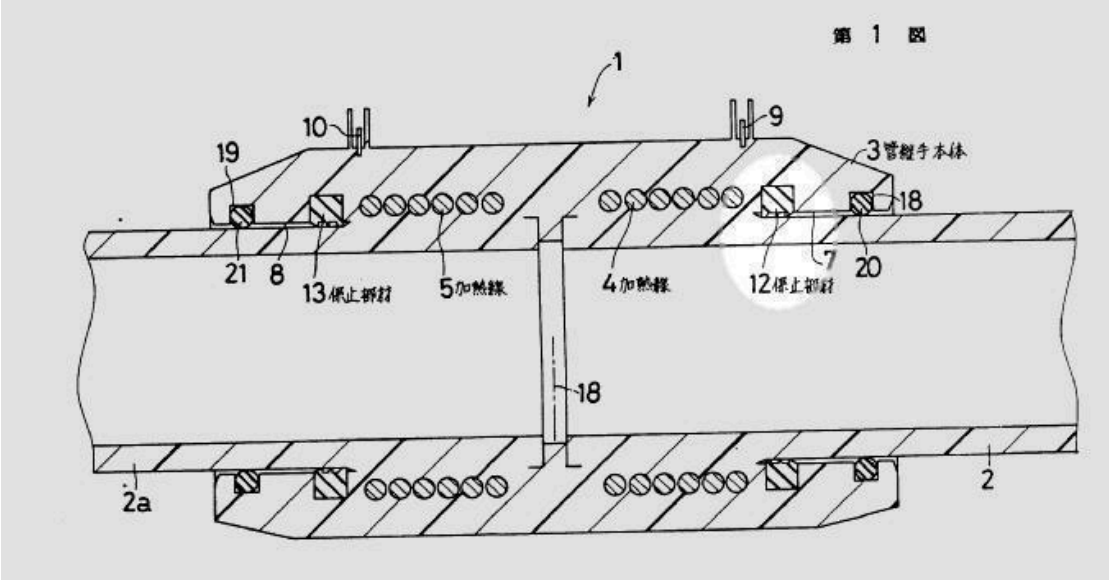

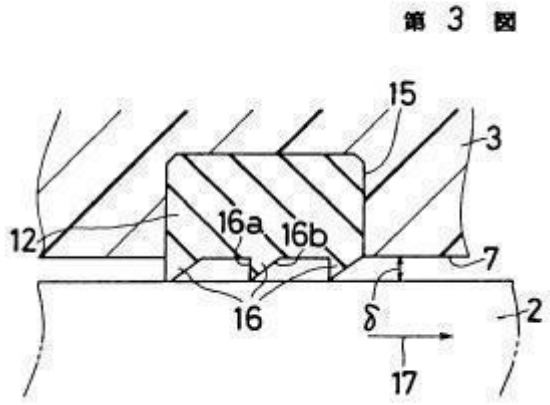

Example 2, from

JP4191592:

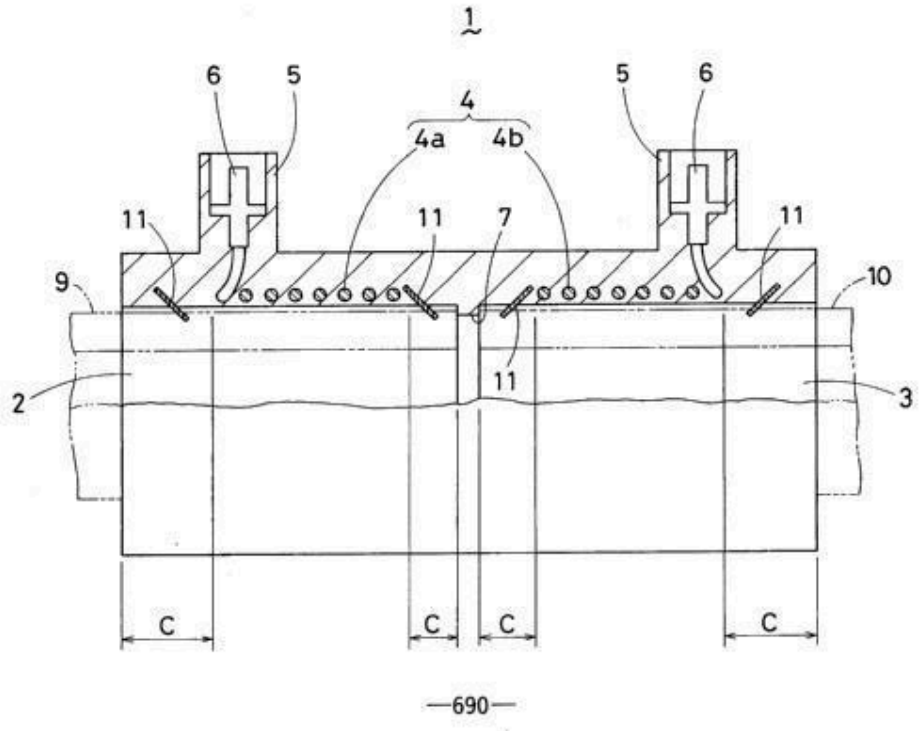

B29C 66/52298

{said socket being composed by several elements}

Definition statement

This place covers:

Example 1, from

DE19519341:

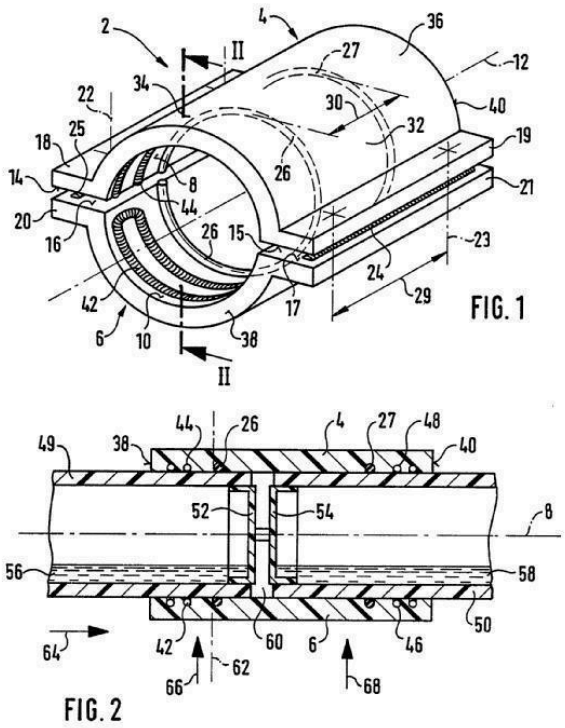

Example 2, from

JP5240394:

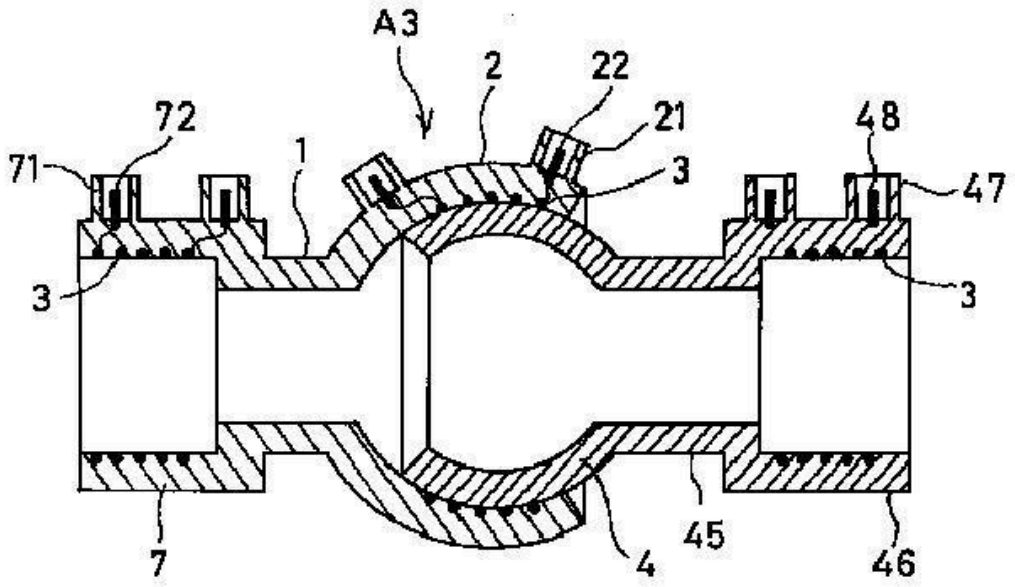

B29C 66/5241

{for forming coaxial connections, i.e. the profiled elements to be joined forming a zero angle relative to each other}

Definition statement

This place covers:

Example 1, from

WO0189811:

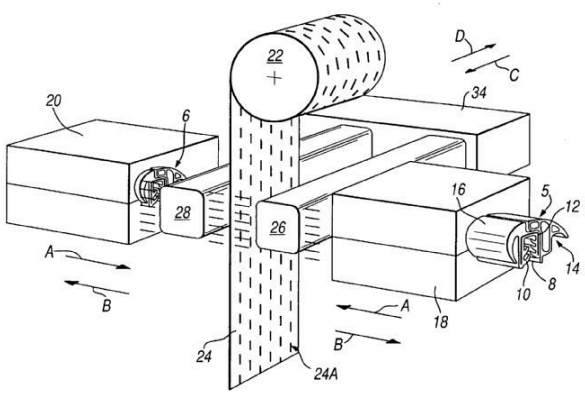

Fig.1

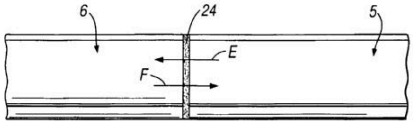

Fig.2

B29C 66/5243

{for forming corner connections, e.g. for making window frames or V-shaped pieces (welded corner joints for window frames E06B 3/9604)}

Definition statement

This place covers:

Example 1, from

EP2233391:

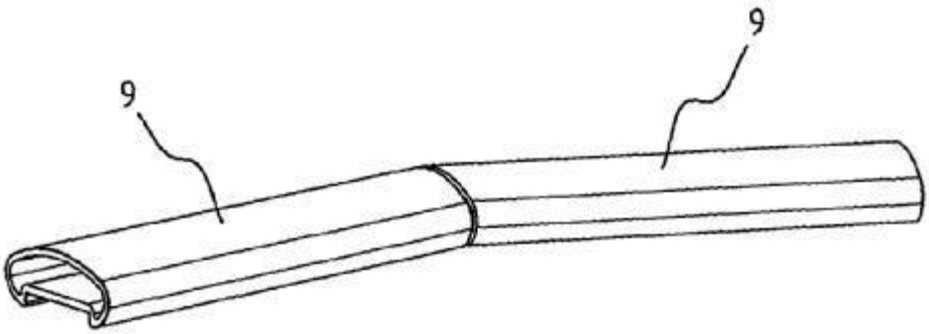

References

Informative references

Attention is drawn to the following places, which may be of interest for search:

Welded corner joints for windows, doors, or the like frames or wings	E06B 3/9604

B29C 66/52431

{with a right angle, e.g. for making L-shaped pieces}

Definition statement

This place covers:

Example 1, from

DE102007055393:

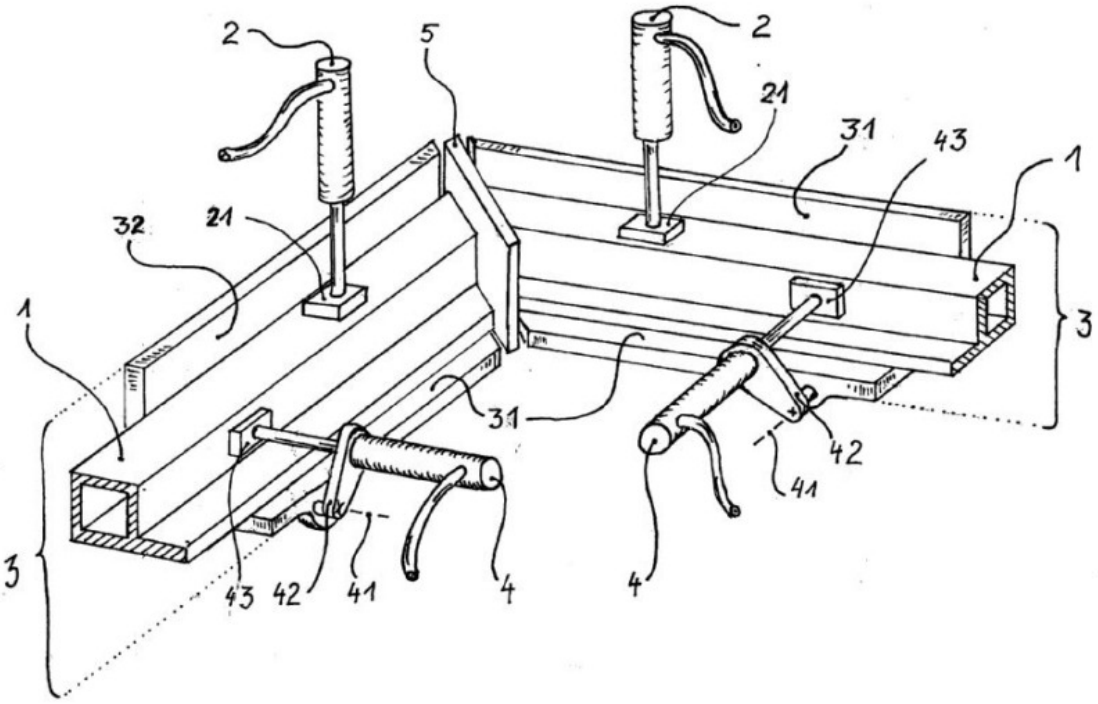

B29C 66/5244

{for forming fork-shaped connections, e.g. for making window frames or Y-shaped pieces}

Definition statement

This place covers:

Example 1, from

FR2712345:

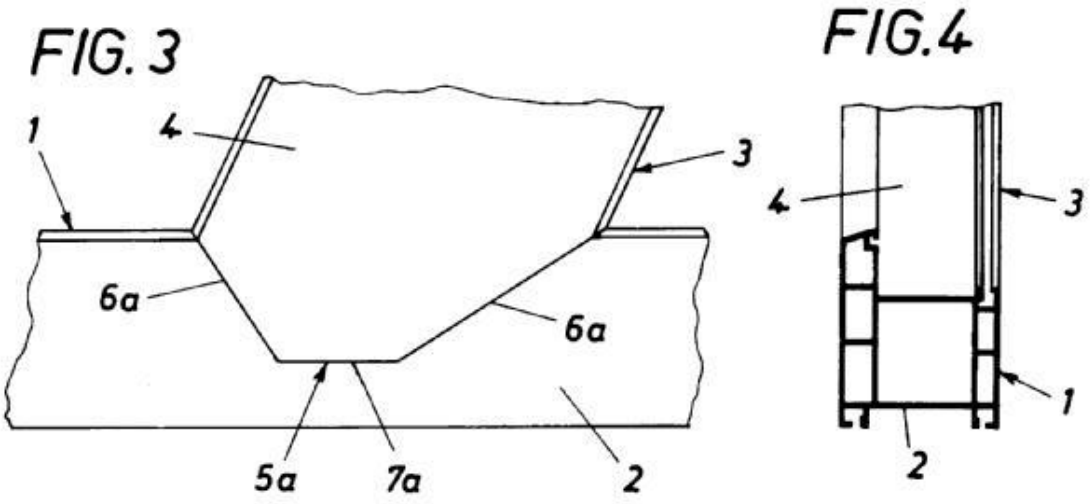

B29C 66/52441

{with two right angles, e.g. for making T-shaped pieces}

Definition statement

This place covers:

Example 1, from

DE20206377U:

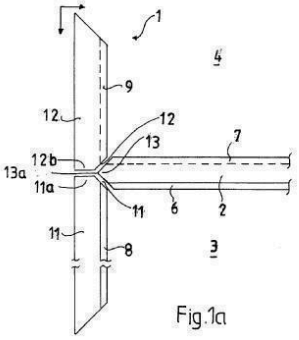

Fig.1a

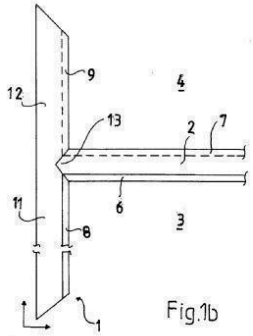

Fig.1b

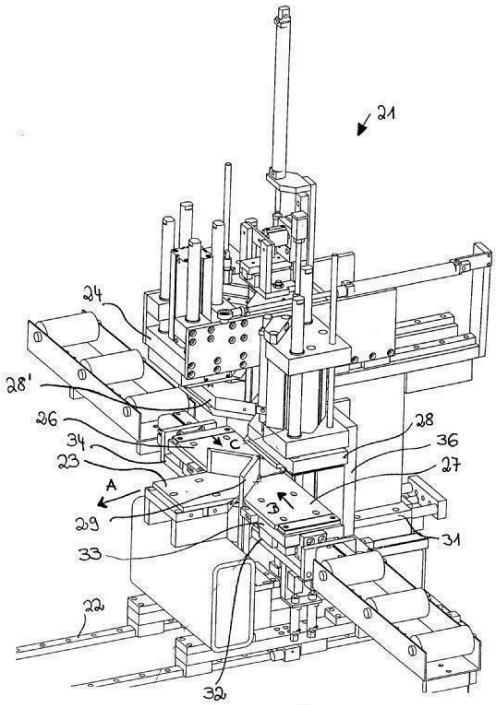

Fig.2

Example 2, from

FR2712345:

FIG.1

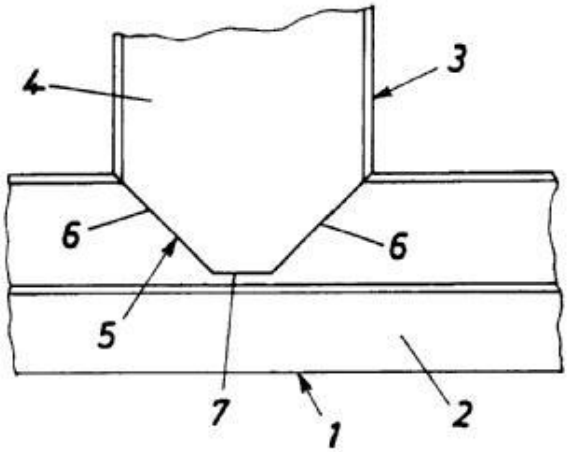

FIG.2

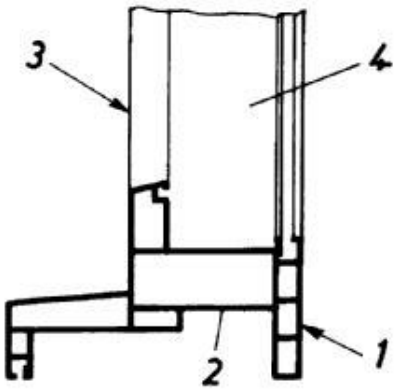

B29C 66/52451

{with four right angles, e.g. for making +-shaped pieces}

Definition statement

This place covers:

Example 1, from

US3707062:

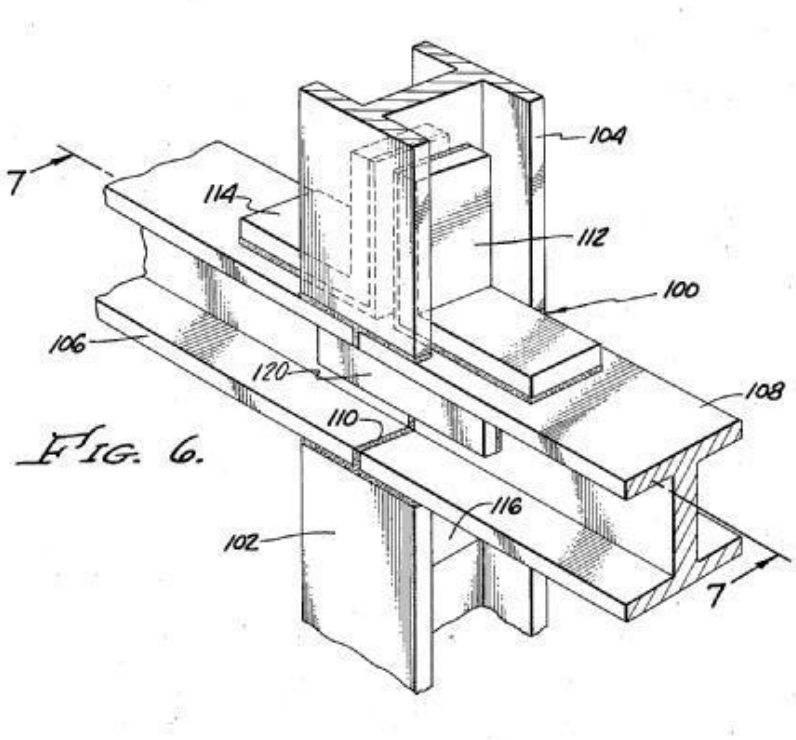

FIG. 6.

B29C 66/53243

{said spouts comprising flanges}

Definition statement

This place covers:

Example 1, from

EP1314539:

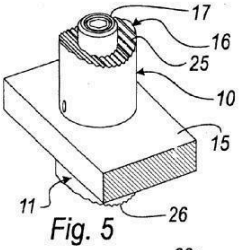

Fig. 5

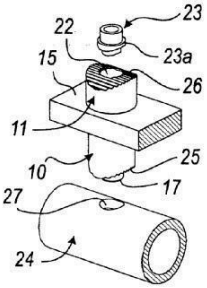

Fig. 6

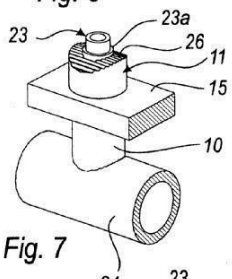

Fig. 7

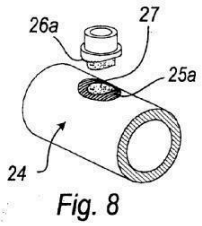

Fig. 8

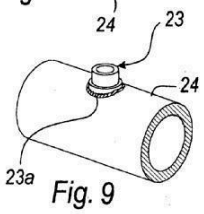

Fig. 9

B29C 66/53246

{said single elements being spouts, e.g. joining spouts to containers}

Definition statement

This place covers:

Example 1, from

US4872935:

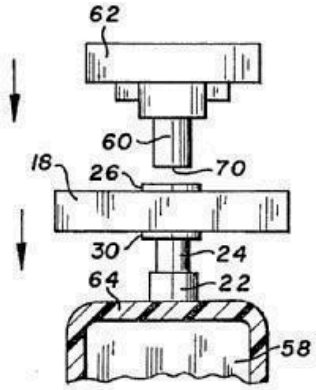

FIG.2

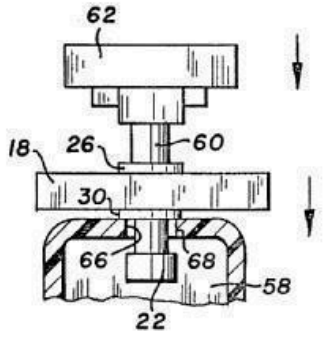

FIG.3

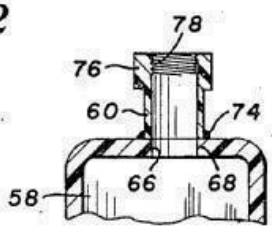

FIG.4

Example 2, from

EP1939509:

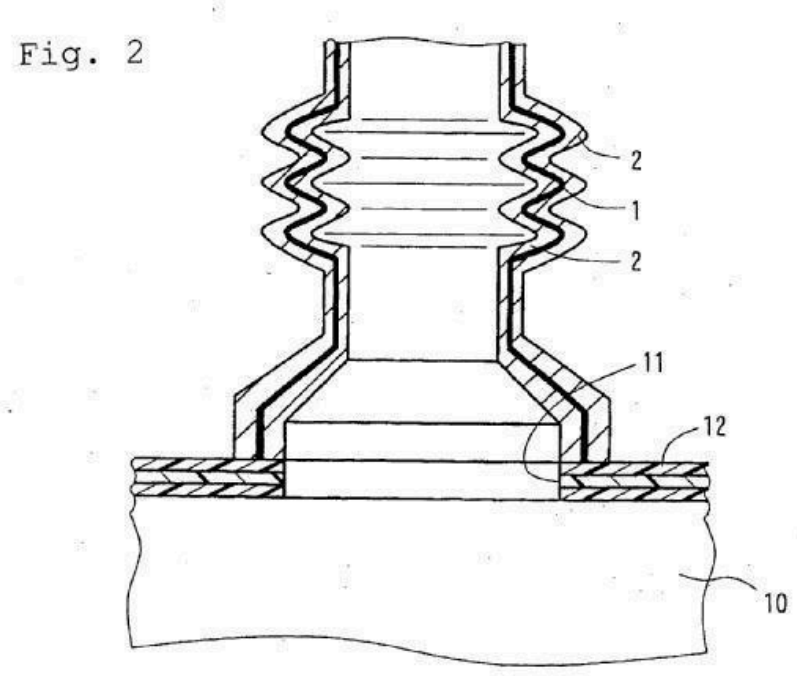

References

Informative references

Attention is drawn to the following places, which may be of interest for search:

Applying rigid valves, spouts, filling tubes to box, carton, envelope or bag	B31B 50/84, B31B 70/844
Fuel tank inlets	B60K 15/04
Applying or incorporating rigid fittings, e.g. discharge spouts, to containers or packages	B65B 61/186
Spouts for containers of polygonal cross-section, said spouts being formed separately from the container	B65D 5/746

B29C 66/53247

{said spouts comprising flanges}

Definition statement

This place covers:

Example 1, from

JP63237935:

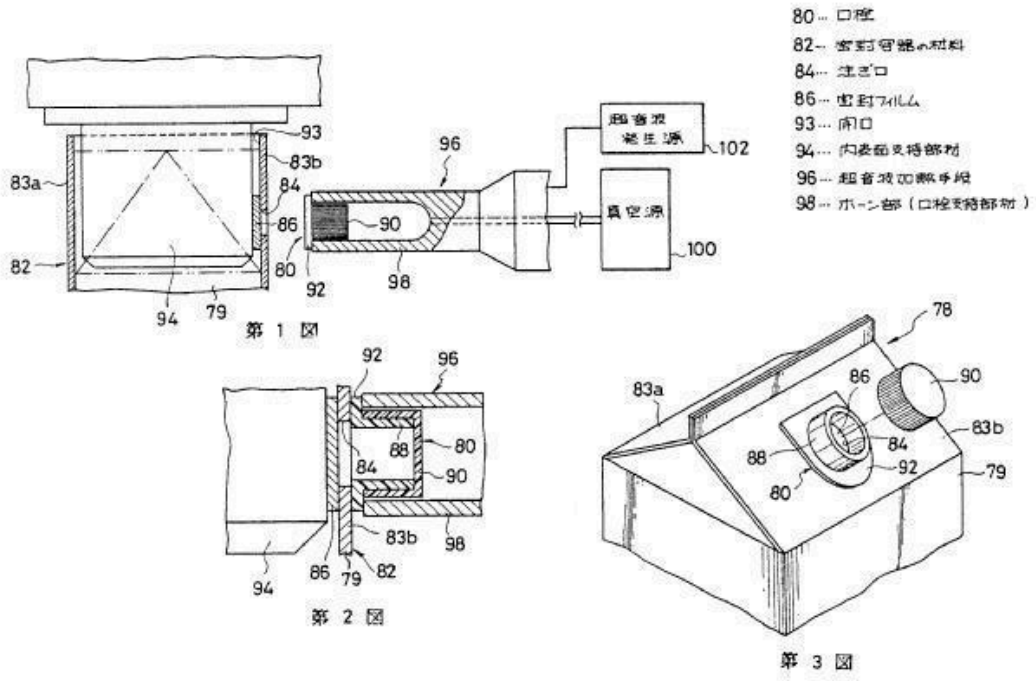

B29C 66/53261

{Enclosing tubular articles between substantially flat elements}

Definition statement

This place covers:

Example 1, from

EP0572187:

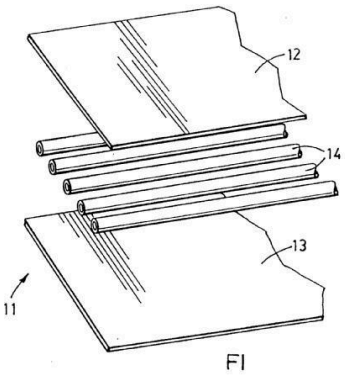

FIG. 1

FI

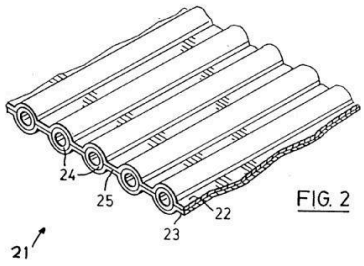

FIG. 2

B29C 66/53262

{Enclosing spouts between the walls of bags, e.g. of medical bags}

Definition statement

This place covers:

Example 1, from

US5855544

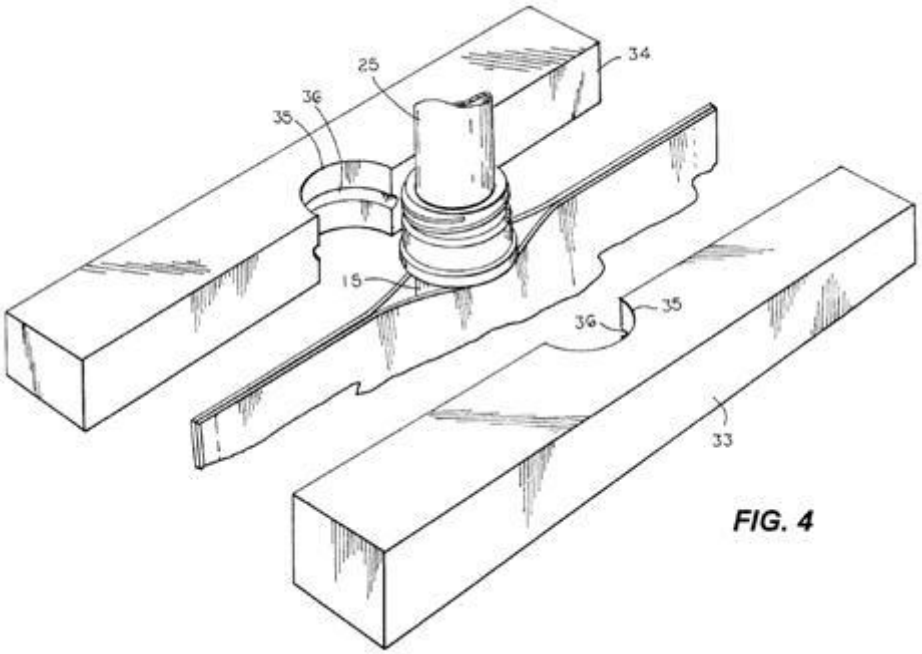

FIG. 4

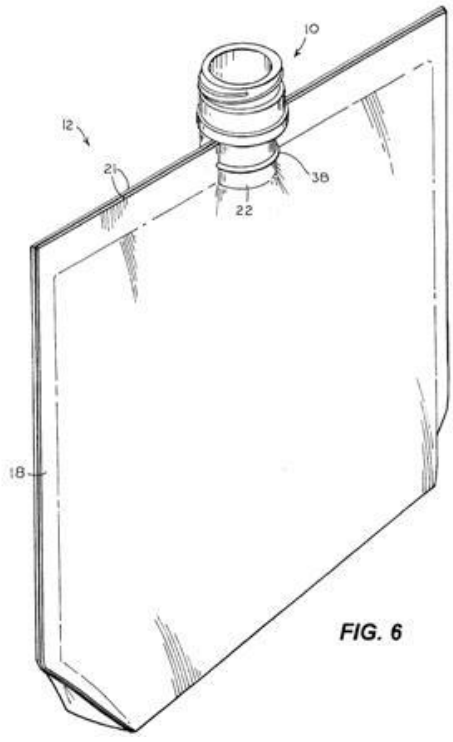

FIG. 6

B29C 66/53263

{said spouts comprising wings, e.g. said spouts being of ship-like or canoe-like form to avoid leaks in the corners}

Definition statement

This place covers:

Example 1, from

JP7323478:

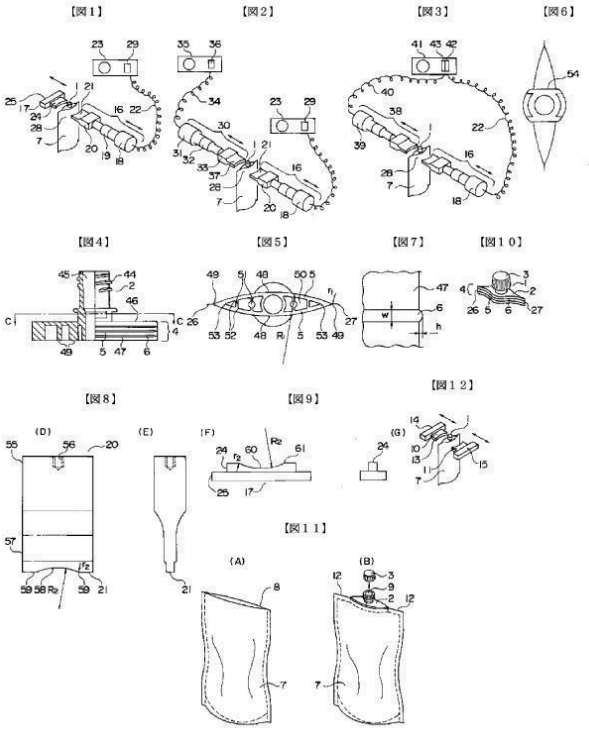

B29C 66/534

{Joining single elements to open ends of tubular or hollow articles or to the ends of bars}

References

Informative references

Attention is drawn to the following places, which may be of interest for search:

Joining a shaft and a balloon for making balloon catheters	A61M 25/1034

B29C 66/5344

{said single elements being substantially annular, i.e. of finite length, e.g. joining flanges to tube ends (B29C 66/5346 takes precedence)}

Definition statement

This place covers:

Example 1, from

CH701363:

FIG. 4

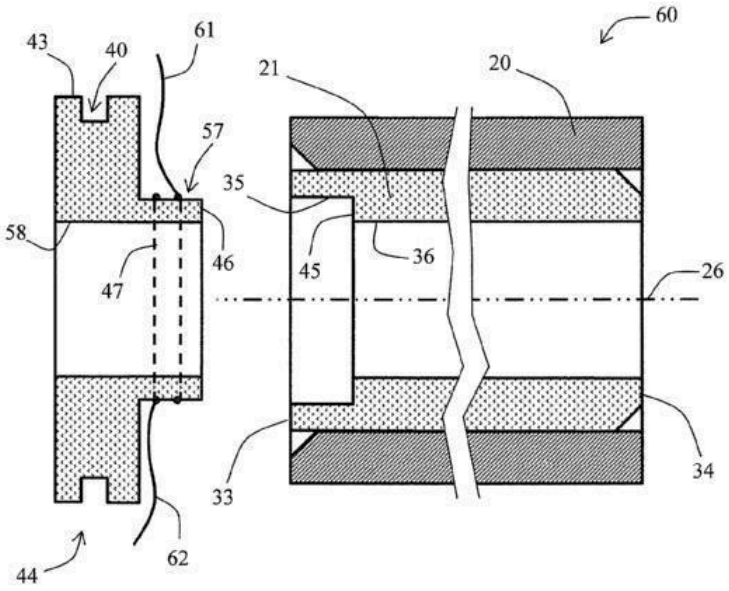

FIG. 5

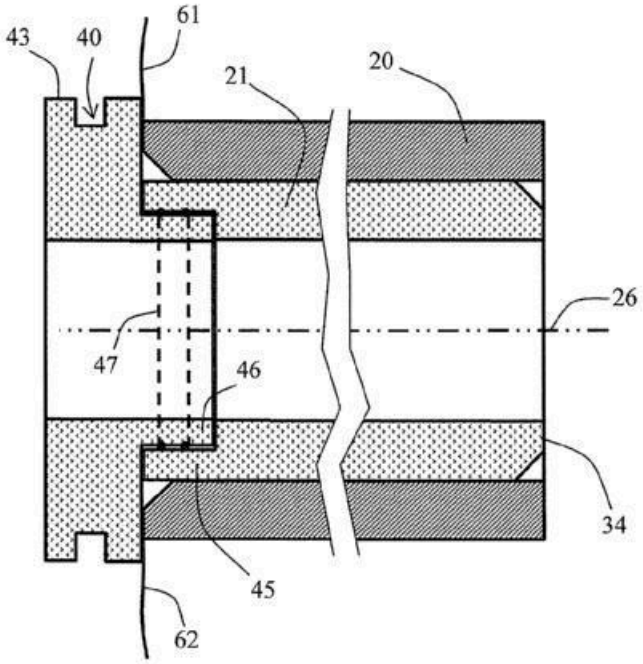

B29C 66/53461

{joining substantially flat covers and/or substantially flat bottoms to open ends of container bodies}

Definition statement

This place covers:

Example 1, from

DE8716157U:

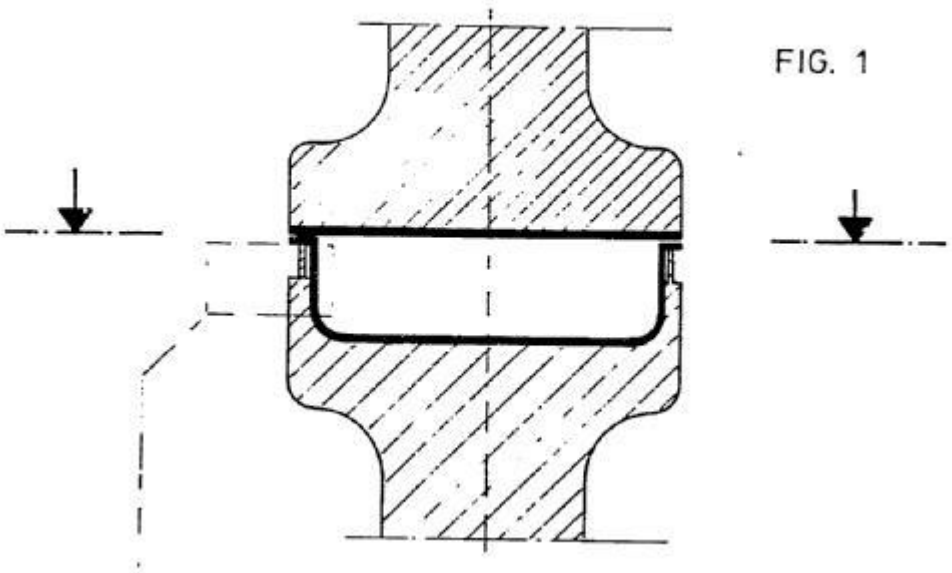

FIG. 1

Example 2, from

WO2010105076:

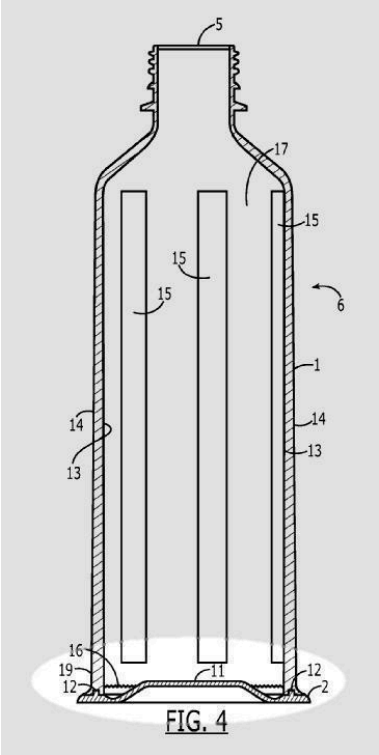

FIG. 4

References

Informative references

Attention is drawn to the following places, which may be of interest for search:

Closing semi-rigid or rigid containers or receptacles after filling, by feeding web material to securing means and securing by heat-sealing	B65B 7/164
Closing semi-rigid or rigid containers or receptacles after filling, by applying separate preformed closures, e.g. lids, covers, securing said closures on said containers by heat-sealing	B65B 7/2878

B29C 66/53462

{joining substantially flat covers and substantially flat bottoms to open ends of container bodies}

Definition statement

This place covers:

Example 1, from

GB998124:

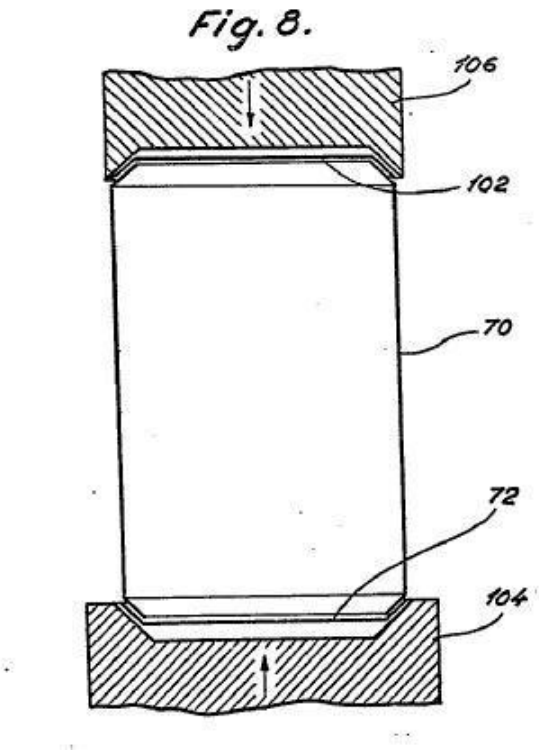

B29C 66/53465

{said single flat elements being provided with holes facing the tube ends, e.g. for making heat-exchangers}

Definition statement

This place covers:

Example 1, from

US2007131401:

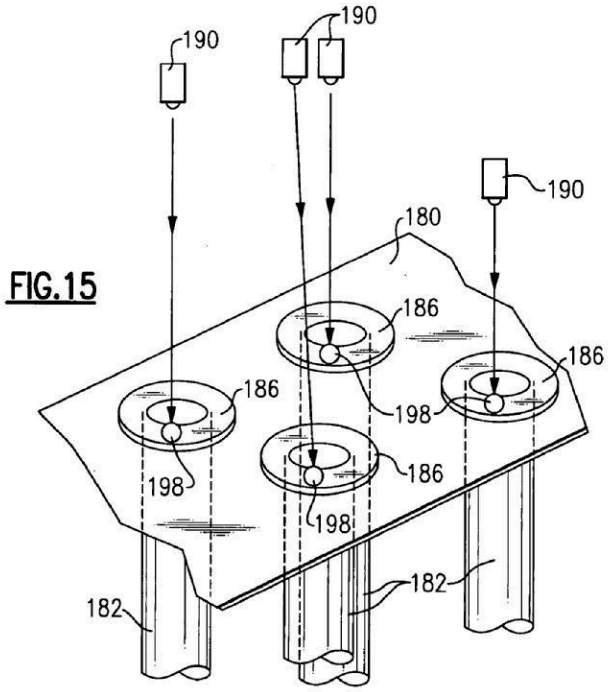

References

Informative references

Attention is drawn to the following places, which may be of interest for search:

Heat-exchanger arrangements for sealing elements into end plates by welding, at least one of the parts being non-metallic, e.g. heat-sealing plastic elements	F28F 9/187

B29C 66/54

{Joining several hollow-preforms, e.g. half-shells, to form hollow articles, e.g. for making balls, containers; Joining several hollow-preforms, e.g. half-cylinders, to form tubular articles}

Definition statement

This place covers:

Example 1, from

JP2010111036:

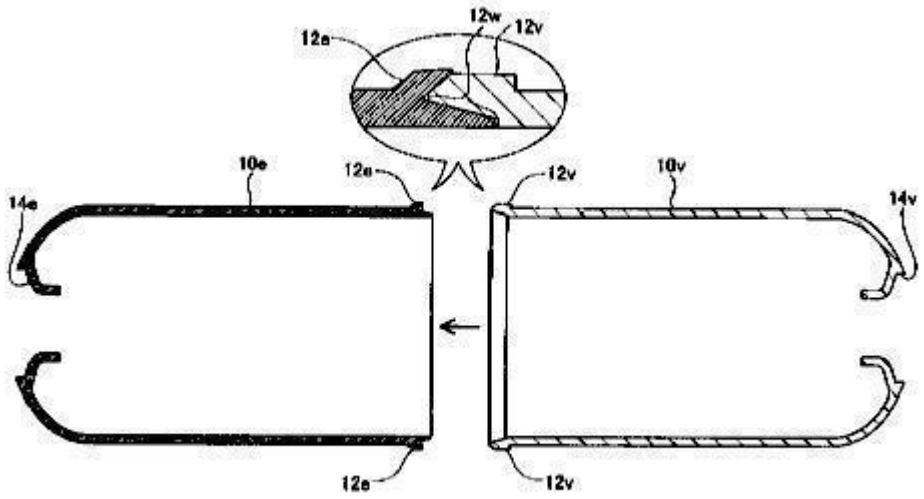

Example 2, from

JP2009285929:

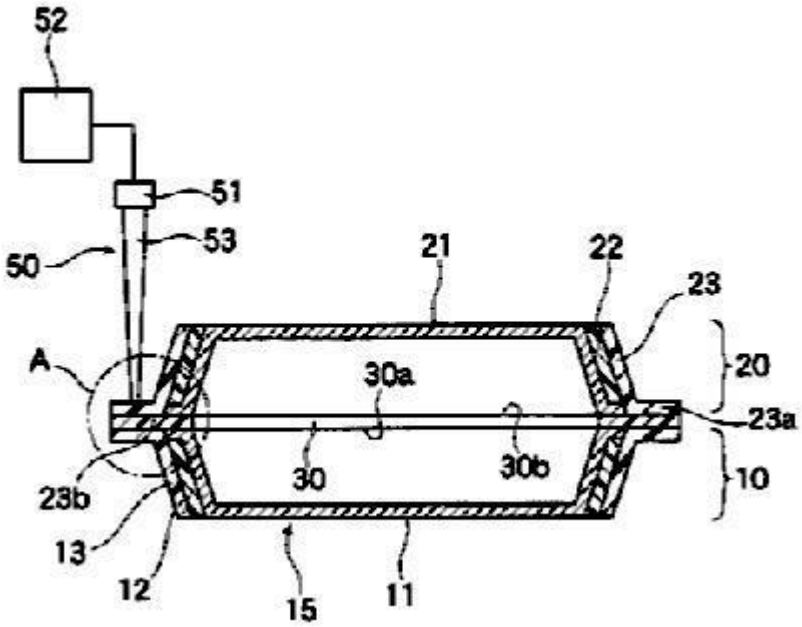

References

Informative references

Attention is drawn to the following places, which may be of interest for search:

Manufacturing and assembling intake systems, by joining multiple sections together by welding, bonding or the like	F02M 35/1036

B29C 66/5412

{said substantially flat extra element being flexible, e.g. a membrane (B29C 66/5416 takes precedence)}

Definition statement

This place covers:

Example 1, from

US2009212460:

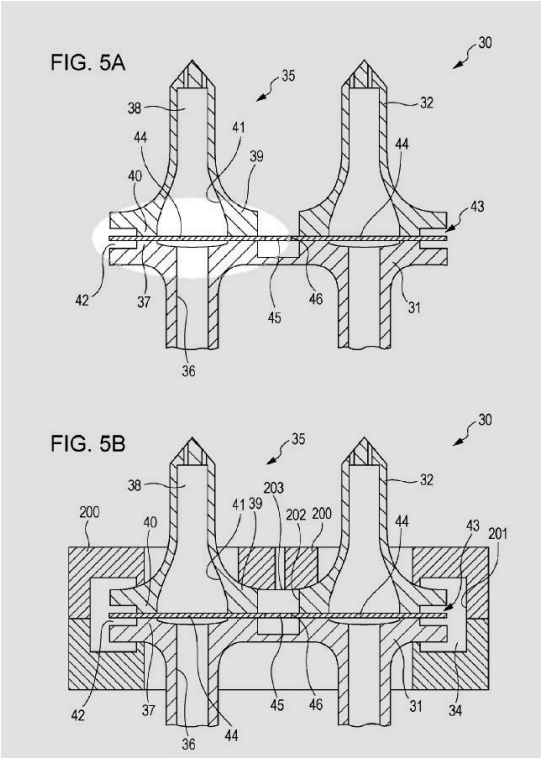

FIG. 6

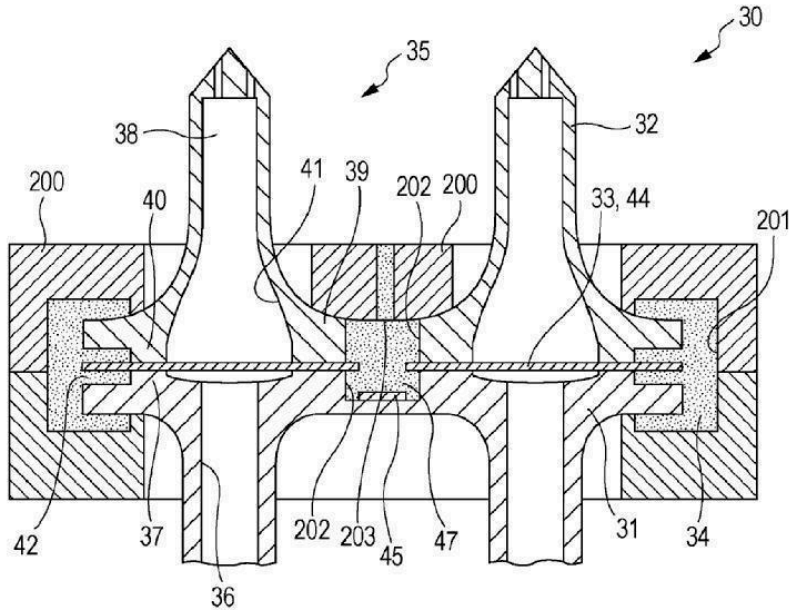
30
35
38
32
200
40
41
39
202
200
33, 44
201
42
37
202
203
45
47
31
34
36

B29C 66/5414

{said substantially flat extra element being rigid, e.g. a plate (B29C 66/5416 takes precedence)}

Definition statement

This place covers:

Example 1, from

EP2153977:

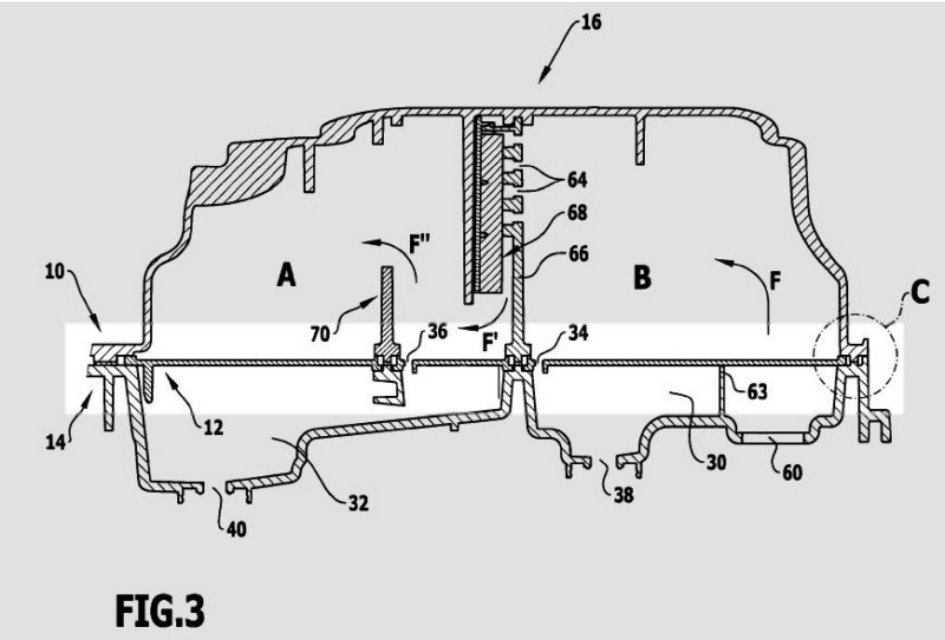

FIG.3

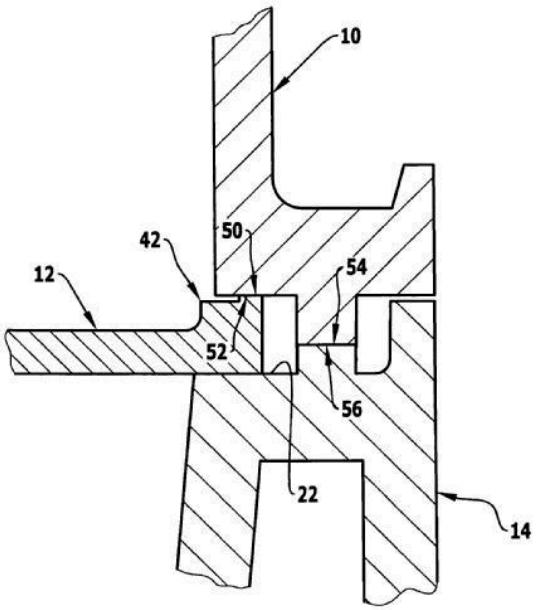

FIG.4B

B29C 66/5416

{said substantially flat extra element being perforated, e.g. a screen}

Definition statement

This place covers:

Example 1, from

JP5212795:

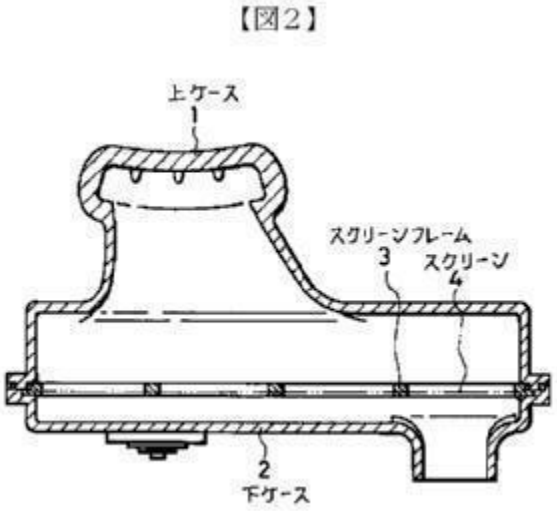

Example 2, from

FR2276160:

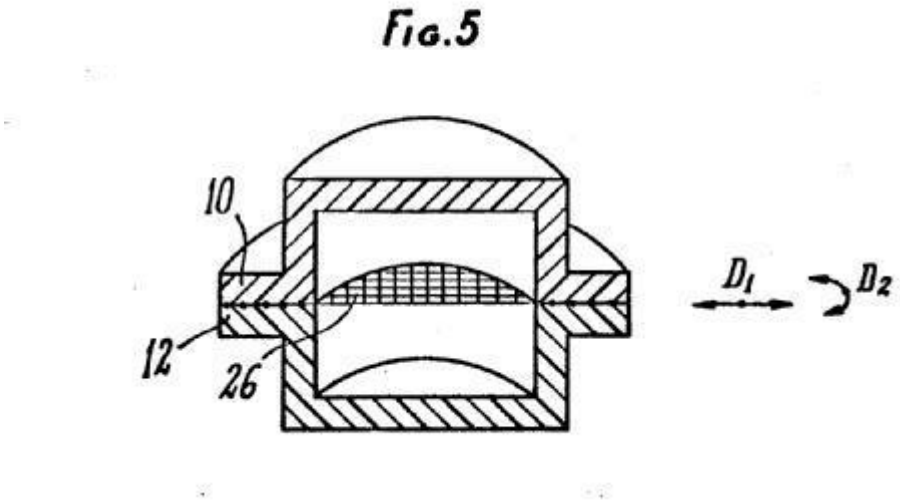

B29C 66/543

{joining more than two hollow-preforms to form said hollow articles}

Definition statement

This place covers:

Example 1, from

DE10216175:

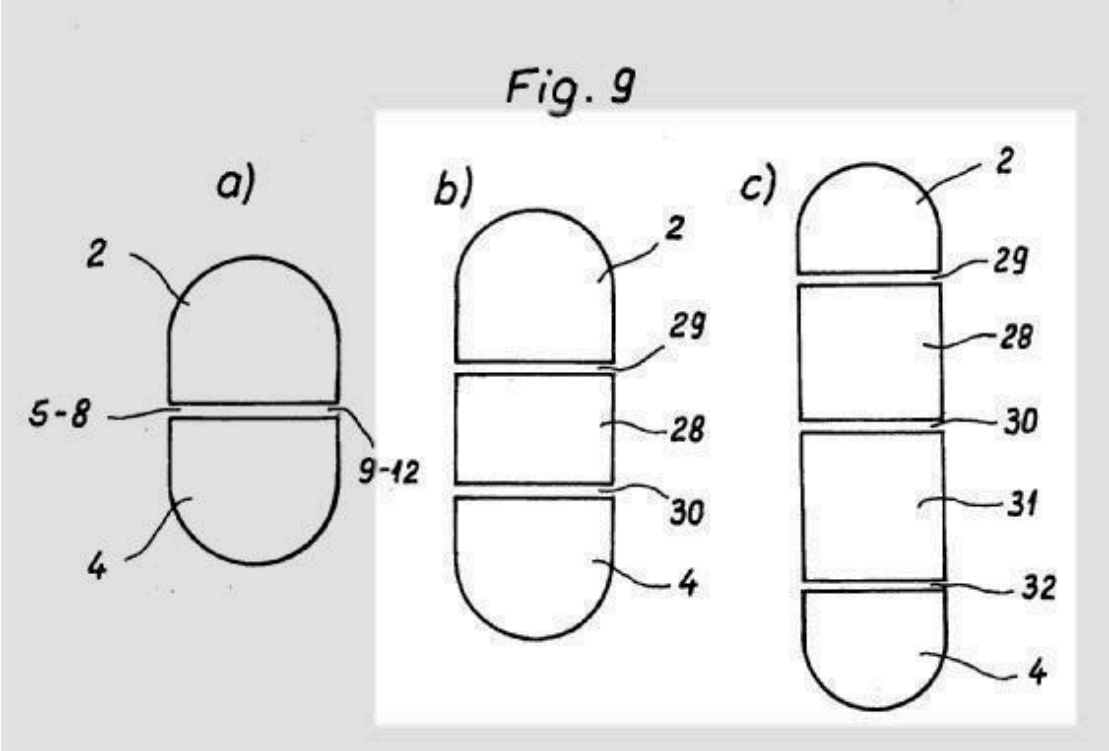

Example 2, from

US2008187697:

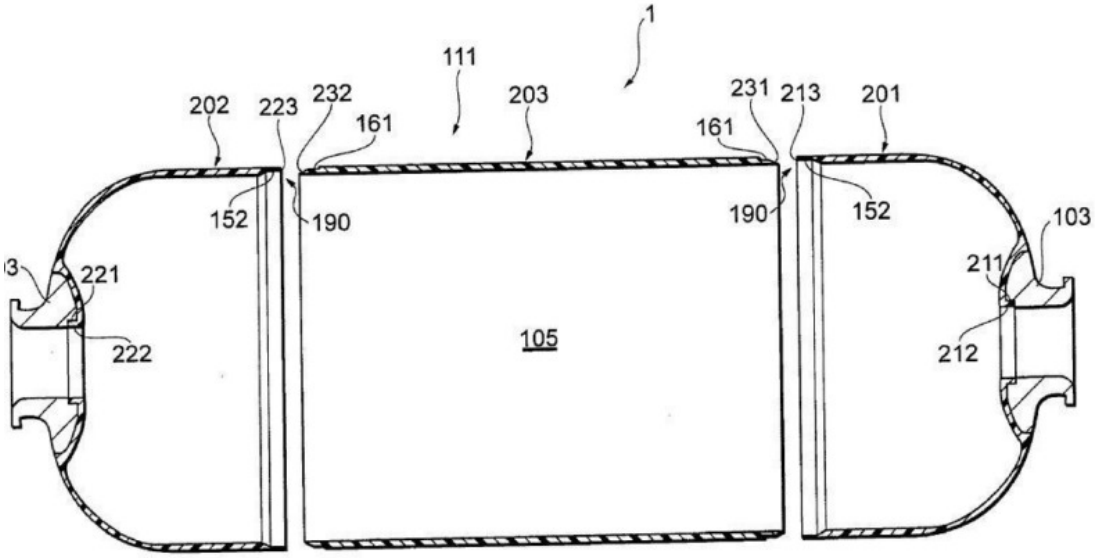

B29C 66/545

{one hollow-preform being placed inside the other}

Definition statement

This place covers:

Example 1, from

US2009173043:

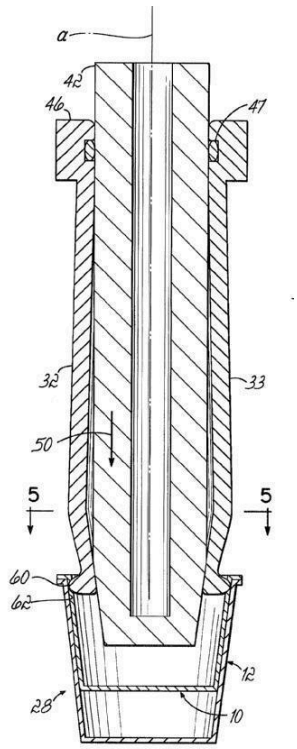

B29C 66/547

{Joining several hollow-preforms, e.g. half-cylinders, to form tubular articles, e.g. endless tubes}

Definition statement

This place covers:

Example 1, from

DE19519341:

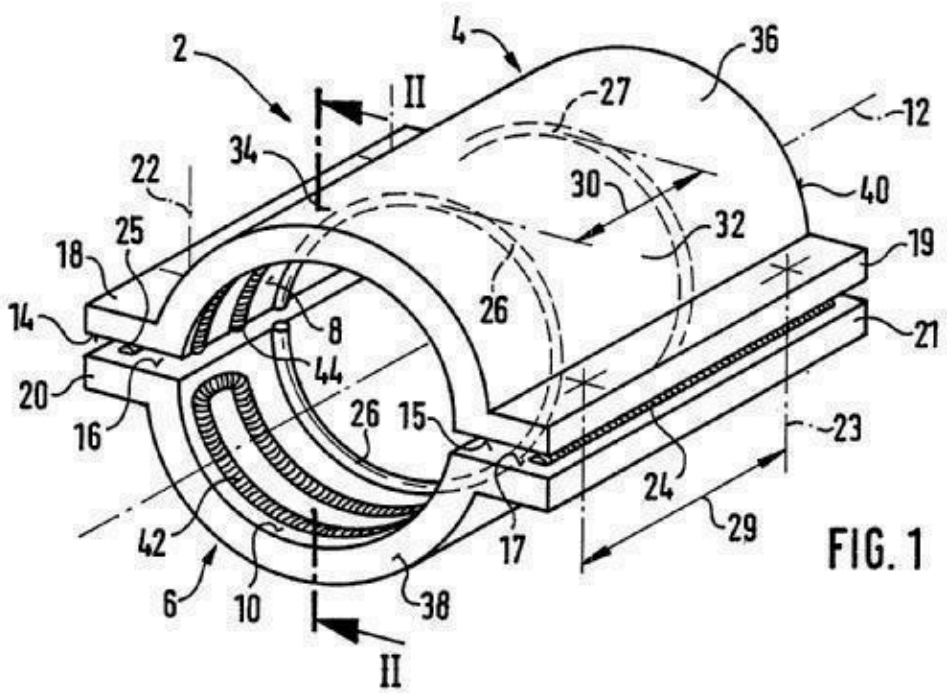

FIG. 1

Example 2, from

US5007666:

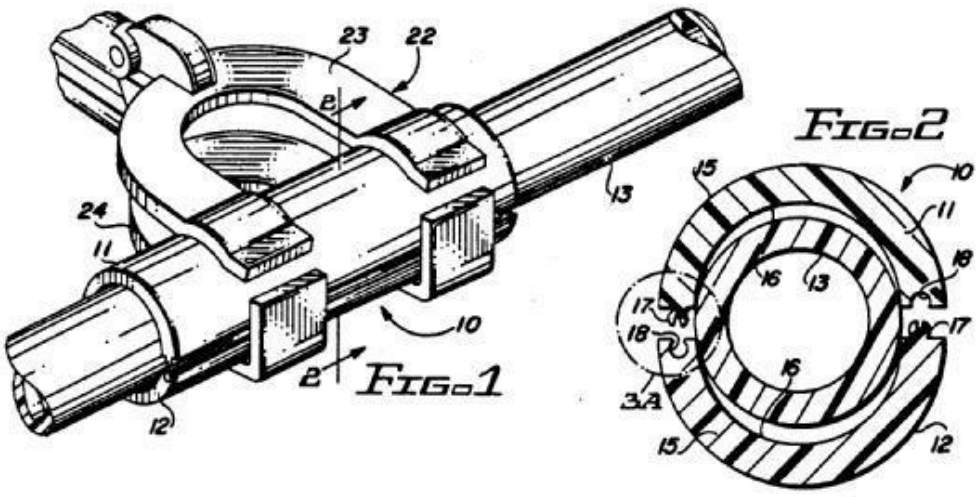

B29C 66/54721

{for making L-shaped pieces}

Definition statement

This place covers:

Example 1, from

FR2328315:

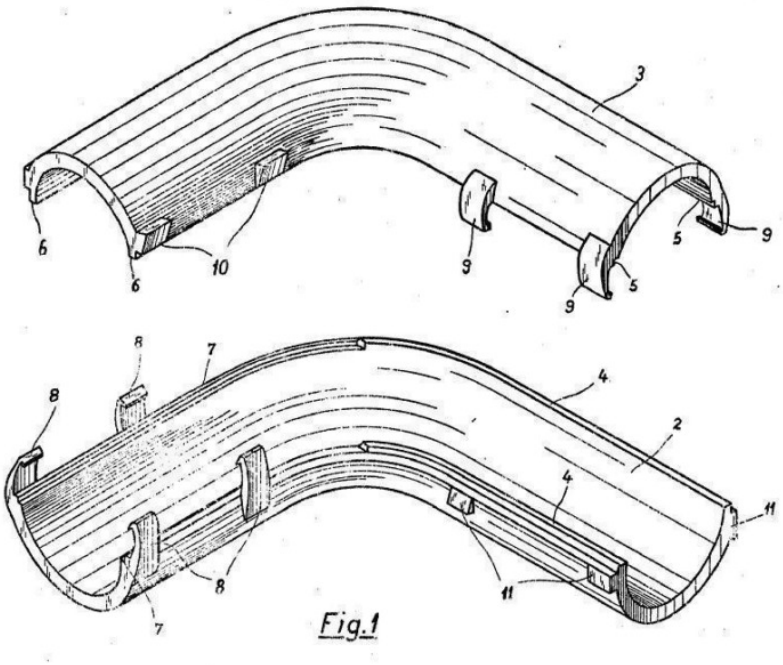

Example 2, from

US5007666:

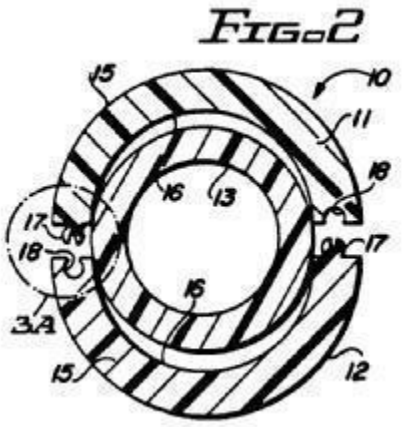

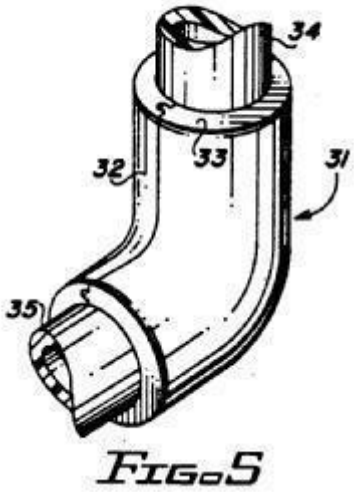

B29C 66/5474

{for making fork-shaped pieces, i.e. with 3 branches, e.g. Y-shaped pieces}

Definition statement

This place covers:

Example 1, from

US5853831:

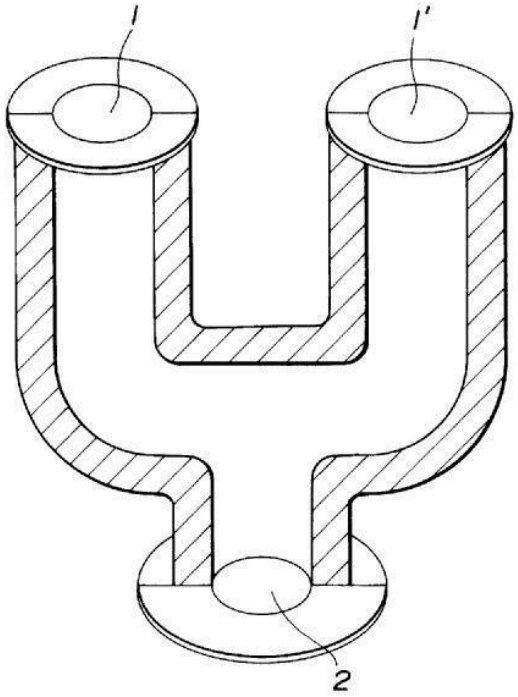

B29C 66/54741

{for making T-shaped pieces}

Definition statement

This place covers:

Example 1, from

JP49003836B:

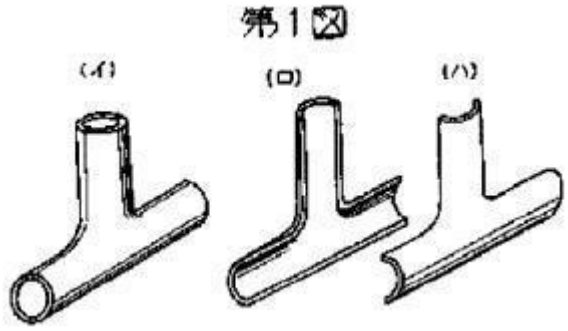

Example 2, from

US5007666:

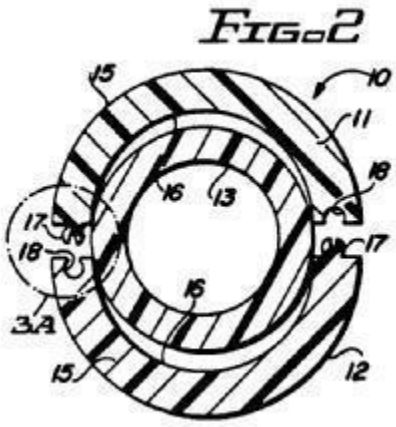

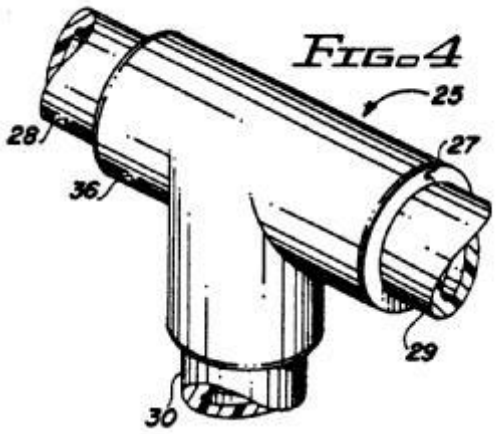

B29C 66/54761

{for making +-shaped pieces}

Definition statement

This place covers:

Example 1, from

US5007666:

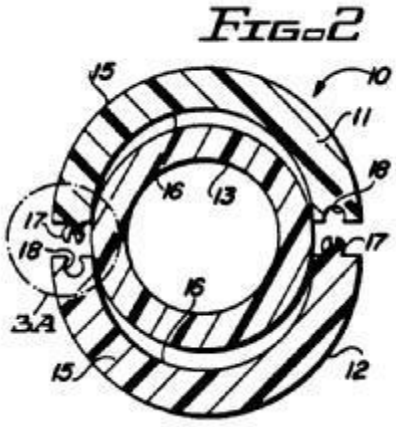

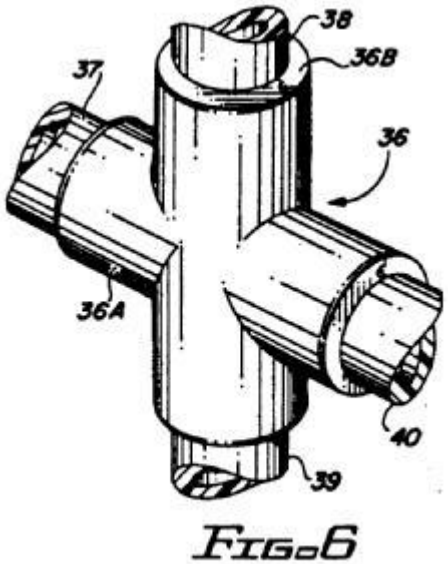

FIG. 6

B29C 66/549

{said hollow-preforms being interconnected during their moulding process, e.g. by a hinge}

Definition statement

This place covers:

Example 1, from

WO03033286:

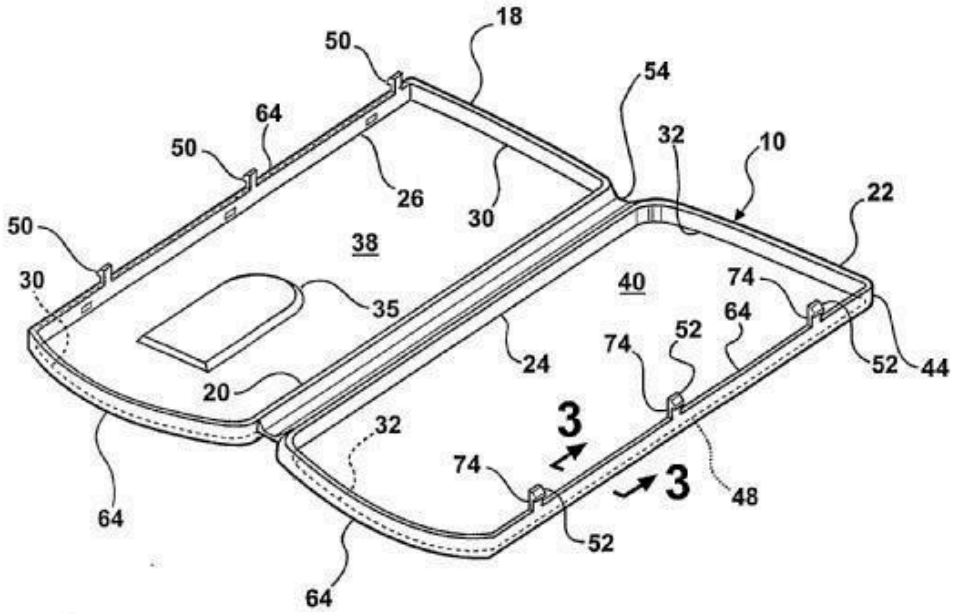

FIG - 2

B29C 66/55

{sealing elements being incorporated into the joints, e.g. gaskets (B29C 66/52296 takes precedence)}

Definition statement

This place covers:

Example 1, from

EP0284899:

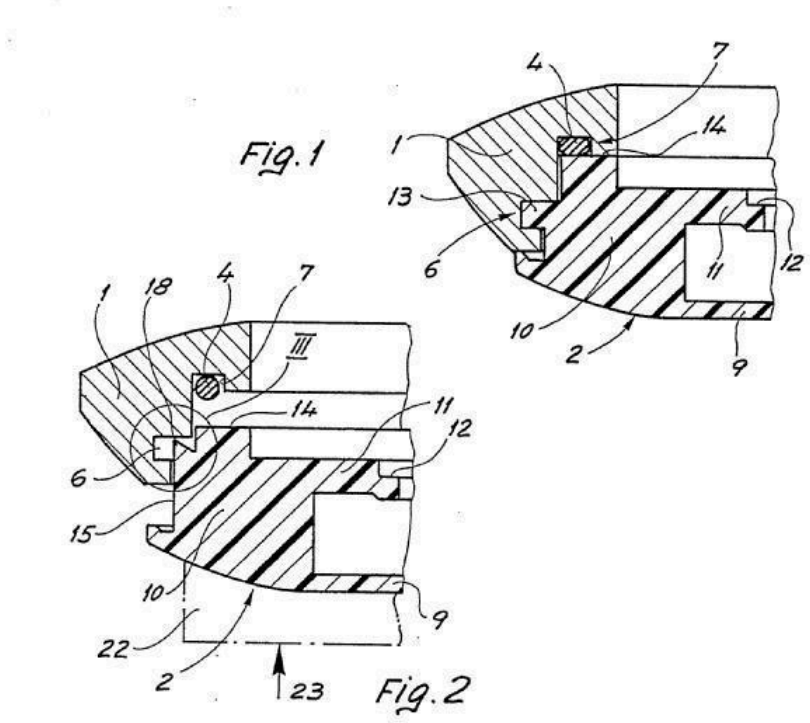

References

Informative references

Attention is drawn to the following places, which may be of interest for search:

Sealing elements in general	F16J 15/00

B29C 66/61

{Joining from or joining on the inside (for making tubes by bending sheets and joining from the inside B29C 53/387)}

Definition statement

This place covers:

Example 1, from

FR2944780:

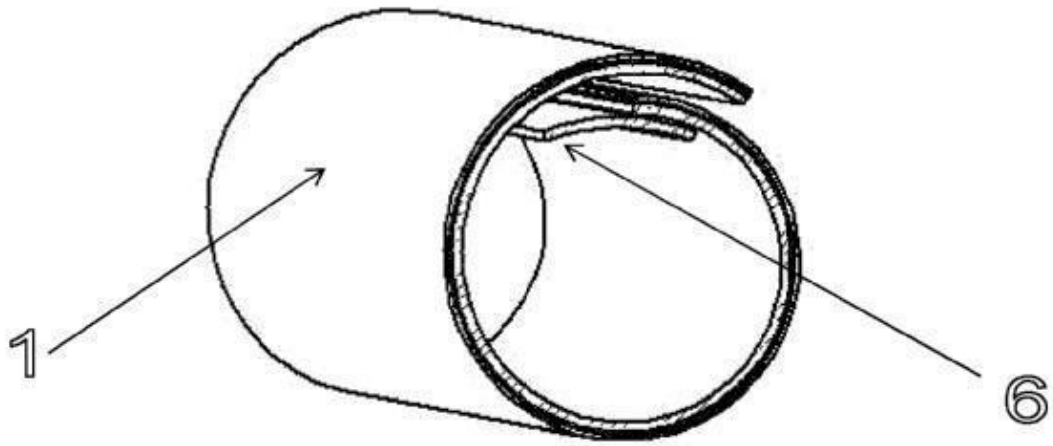

FIG. 2

Example 2, from

EP2253876:

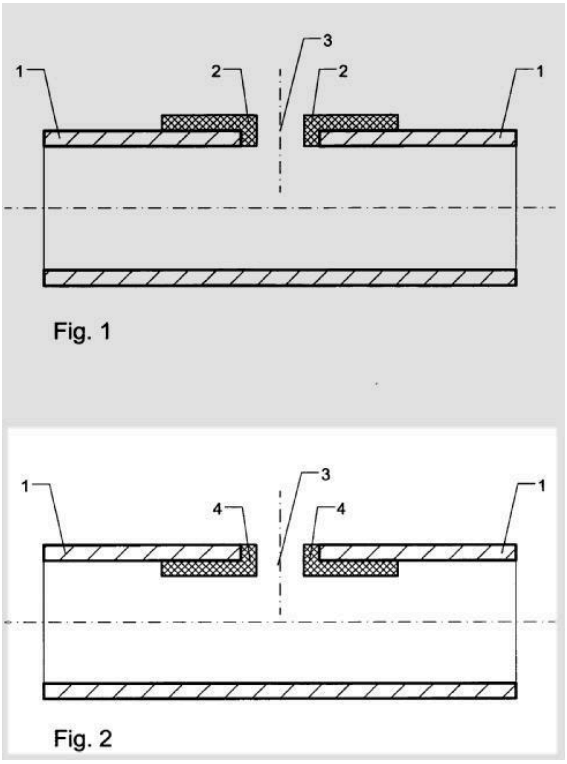

Fig. 1

Fig. 2

References

Informative references

Attention is drawn to the following places, which may be of interest for search:

Lining of internal surfaces	B29C 63/26

B29C 66/612

{Making circumferential joints}

Definition statement

This place covers:

Example 1, from

WO2008028224:

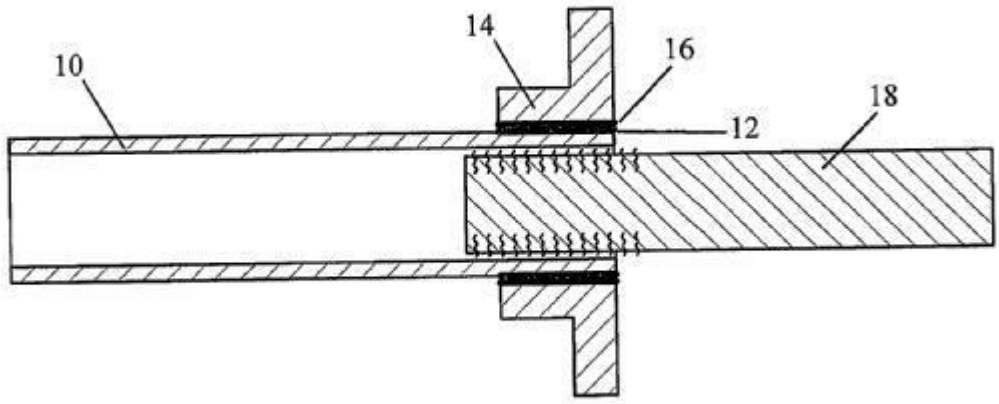

B29C 66/632

{using a fluid}

Definition statement

This place covers:

Example 1, from

EP0313732:

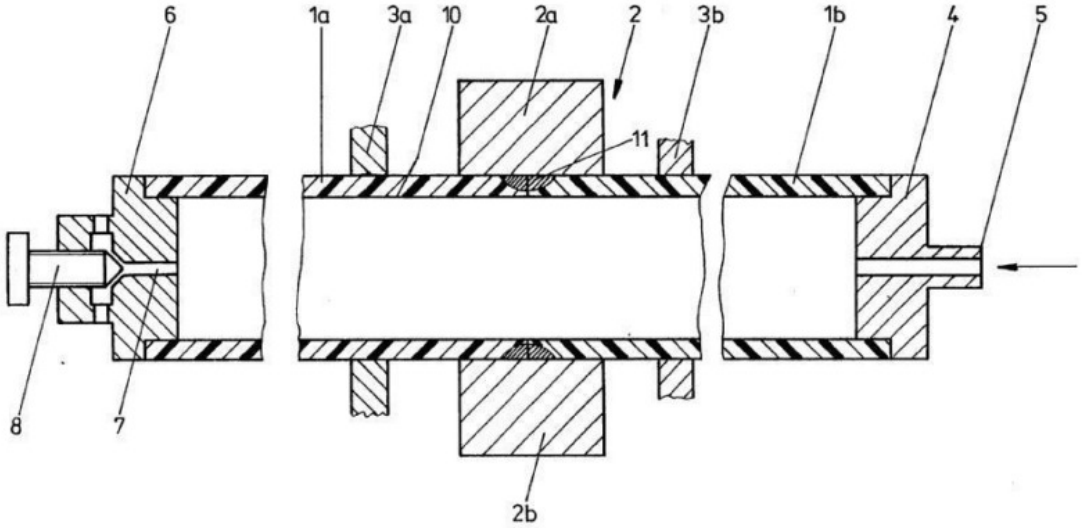

B29C 66/634

{using an inflatable core}

Definition statement

This place covers:

Example 1, from

EP0415068:

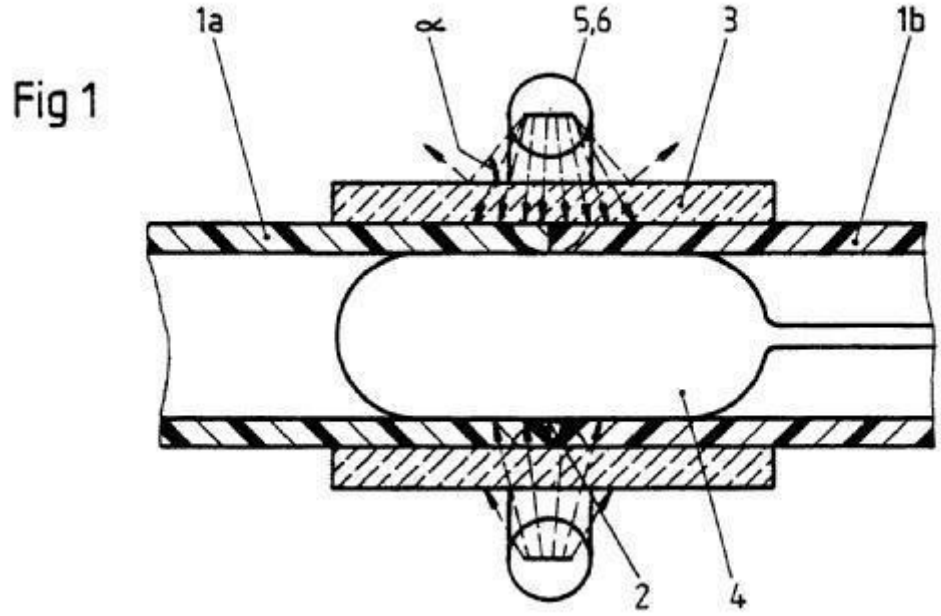

References

Informative references

Attention is drawn to the following places, which may be of interest for search:

Inflatable cores or mandrels	B29C 33/505
Collapsible, e.g. inflatable, mandrels especially adapted for winding and joining	B29C 53/824

B29C 66/636

{using a support which remains in the joined object}

Definition statement

This place covers:

Example 1, from

DE4123383:

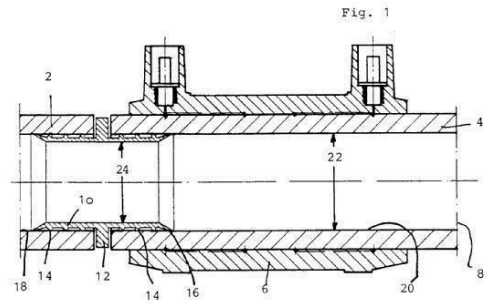

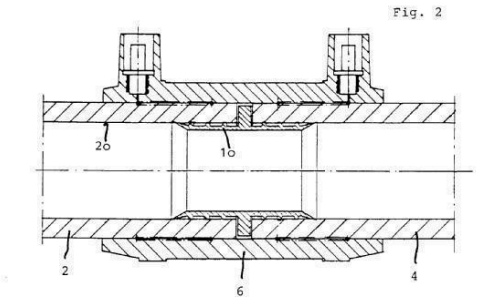

B29C 66/65

{with a relative motion between the article and the welding tool (B29C 65/10, B29C 65/12 take precedence)}

Definition statement

This place covers:

Example 1, from

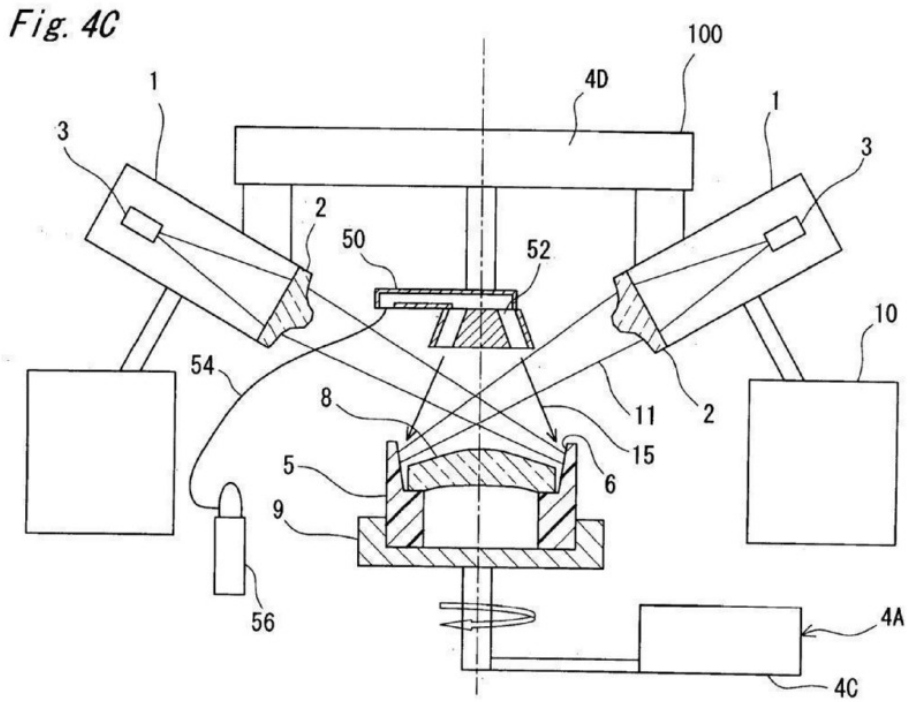

US2006043622:

Example 2, from

FR2812372:

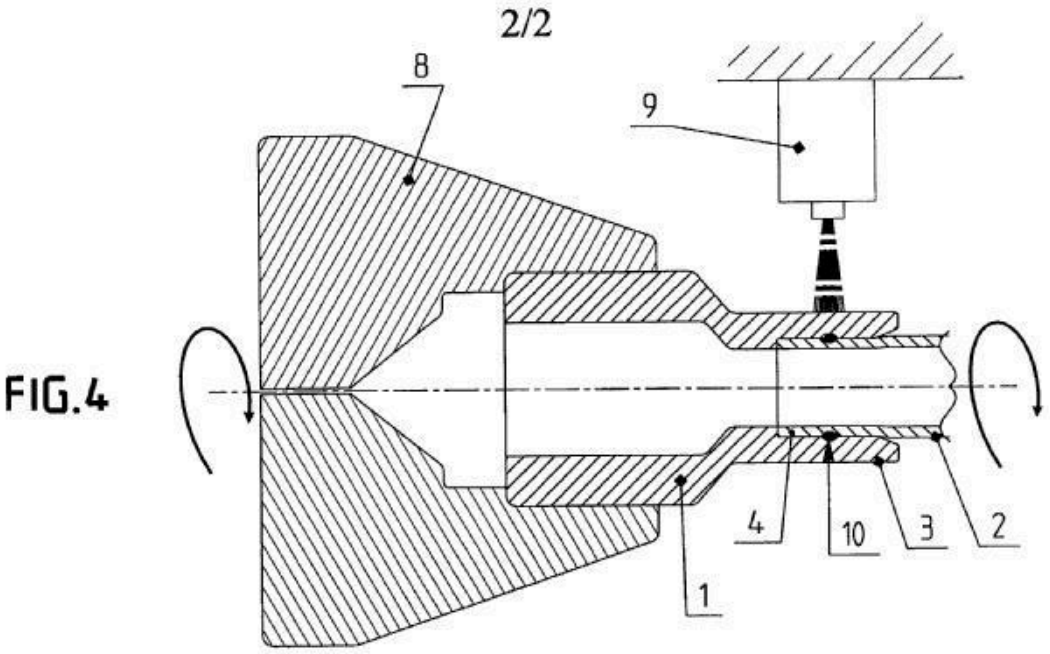

FIG.4

Example 3, from

JP2003123512:

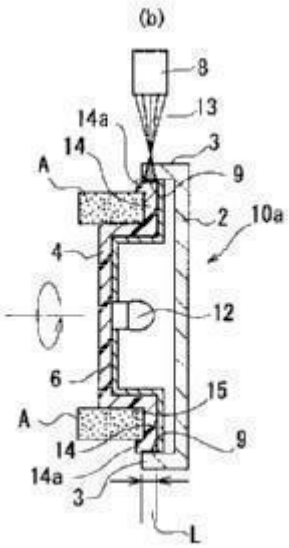

B29C 66/652

{moving the welding tool around the fixed article}

Definition statement

This place covers:

Example 1, from

Fig. 4A

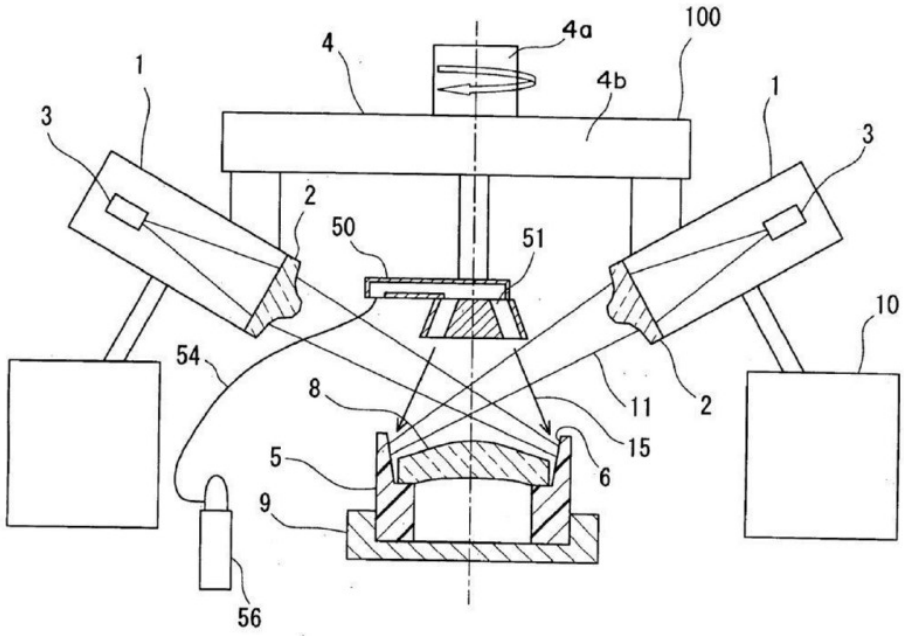

US2006043622:

Example 2, from

FR2812372:

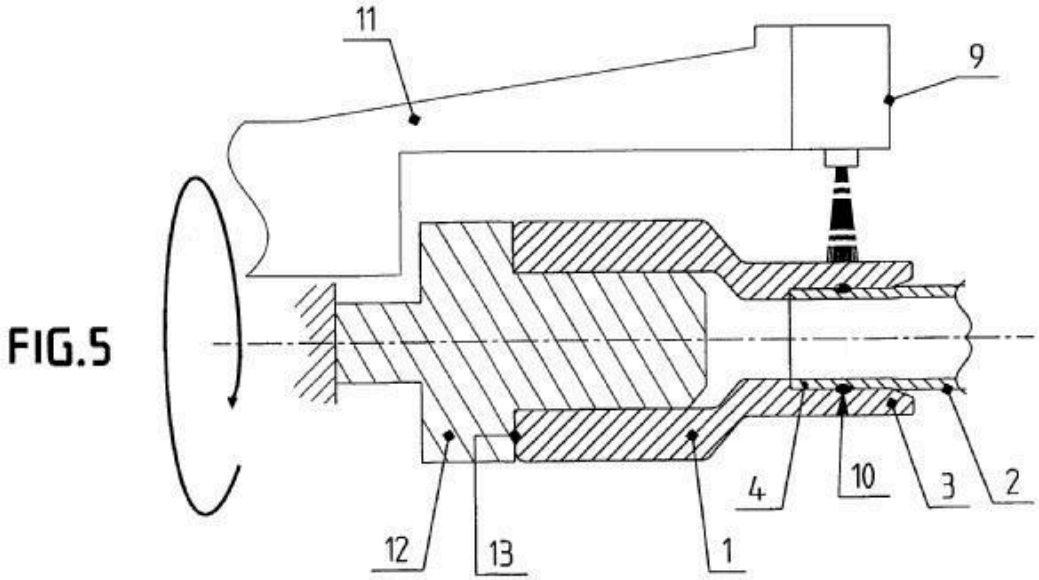

FIG.5

B29C 66/69

{General aspects of joining filaments (bundling articles B65B 13/00; interconnecting successive lengths of material B65H 69/00)}

Definition statement

This place covers:

Example 1, from

EP2168755:

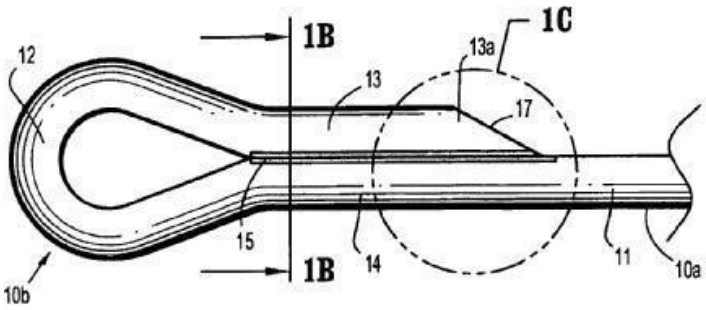

FIG. 1A

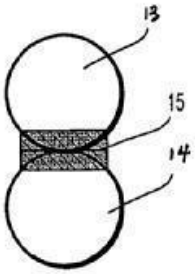

FIG. 1B

References

Informative references

Attention is drawn to the following places, which may be of interest for search:

Making brushes by welding together bristles made of plastic materials	A46B 3/06
Securing filiform haptic to lens body	A61F 2002/1686
Methods of, or devices for, Interconnecting succesive lengths of filamentary material by welding	B65H 69/08
Non-woven fabrics formed wholly or mainly of staple fibres or like relatively short fibres, from fleece or layers composed of fibres without existing or potential cohesive properties, by welding together the fibres, e.g. by partially melting or dissolving	D04H 1/54

B29C 66/71

{characterised by the composition of the plastics material of the parts to be joined (welding bar compositions B29C 65/125)}

Special rules of classification

Combination of B29C 66/71 with the relevant composition index from B29K 2001/00 - B29K 2095/00 is compulsory.

For instance, "characterised by the composition of the plastics material of the parts to be joined being PTFE" has to be classified as: B29C 66/71; B29K 2027/18.

B29C 66/721

{Fibre-reinforced materials (B29C 66/729 takes precedence)}

Special rules of classification

Indexing with B29K 2105/06 is optional.

B29C 66/7212

{characterised by the composition of the fibres}

Special rules of classification

Combination of B29C 66/7212 with the relevant reinforcement composition index from B29K 2201/00 - B29K 2311/14 is compulsory.

For instance, "characterised by the composition of the fibres being carbon" has to be classified as: B29C 66/7212; B29K 2307/04.

B29C 66/72141

{Fibres of continuous length}

Definition statement

This place covers:

Example 1, from

EP1892079:

FIG.1

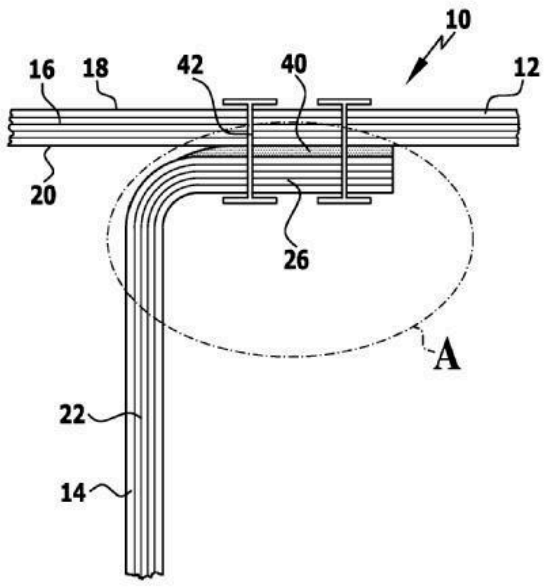

Special rules of classification

Indexing from B29K 2105/08 - B29K 2105/10 is optional

B29C 66/72143

{Fibres of discontinuous lengths}

Definition statement

This place covers:

Example 1, from

EP1941987:

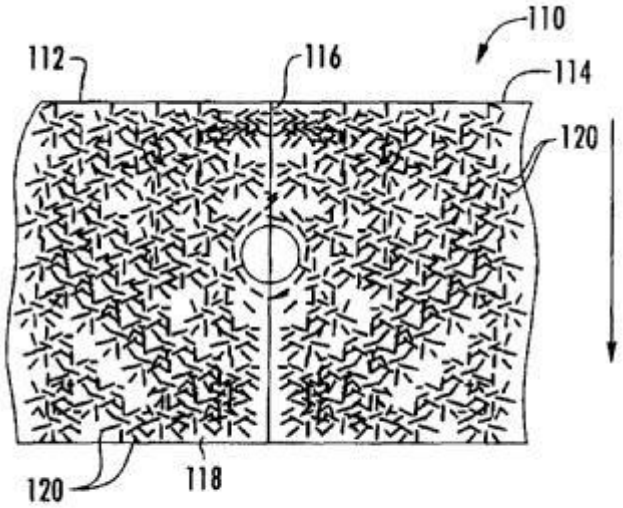

FIG. 3

Special rules of classification

Indexing from B29K 2105/12 - B29K 2105/14 is optional

B29C 66/723

{being multi-layered (B29C 66/7292, B29C 66/72941 take precedence)}

Definition statement

This place covers:

Example 1, from

EP2092231:

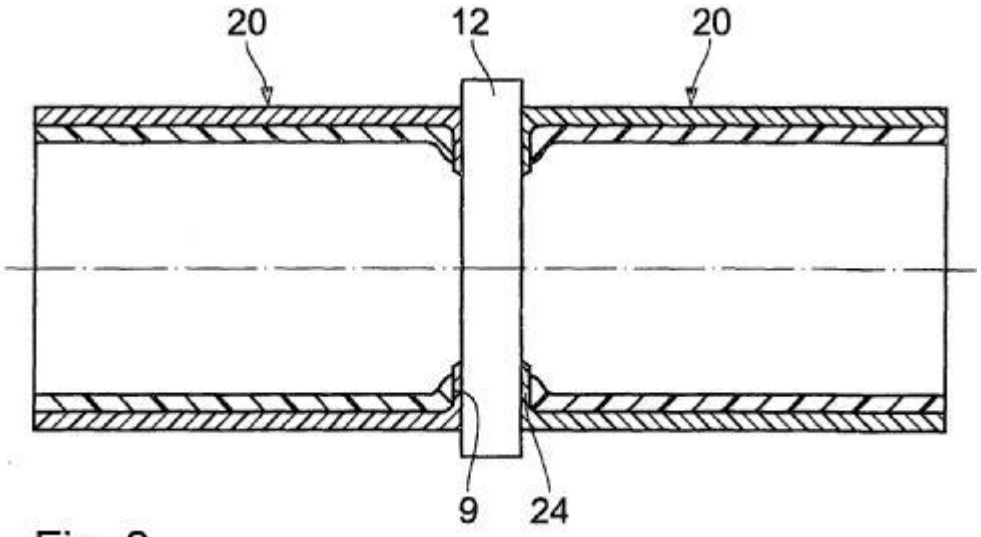

Fig. 9

References

Informative references

Attention is drawn to the following places, which may be of interest for search:

Layered products essentially comprising natural or synthetic rubber	B32B 25/00
Layered products essentially comprising natural or synthetic rubber comprising rubber as the main or only constituent of a layer, next to another layer of synthetic resin	B32B 25/08
Layered products essentially comprising synthetic resin	B32B 27/00
Layered products essentially comprising synthetic resin as the main or only constituent of a layer next to another layer of synthetic resin of a different kind	B32B 27/08

Special rules of classification

Indexing with B29L 2009/00 is optional.

B29C 66/72321

{consisting of metals or their alloys}

References

Informative references

Attention is drawn to the following places, which may be of interest for search:

Layered products essentially comprising metal as the main or only constituent of a layer, next to another layer of rubber	B32B 15/06
Layered products essentially comprising metal as the main or only constituent of a layer, next to another layer of synthetic resin	B32B 15/08

B29C 66/72326

{Glass}

References

Informative references

Attention is drawn to the following places, which may be of interest for search:

Layered products essentially comprising glass at the main or only constituent of a layer, next to another layer of synthetic resin	B32B 17/10

B29C 66/72328

{Paper}

References

Informative references

Attention is drawn to the following places, which may be of interest for search:

Layered products essentially comprising natural or synthetic rubber comprising rubber as the main or only constituent of a layer, next to another layer of paper or cardboard	B32B 25/06
Layered products essentially comprising synthetic resin as the main or only constituent of a layer next to another layer of paper or cardboard	B32B 27/10

B29C 66/72329

{Wood}

References

Informative references

Attention is drawn to the following places, which may be of interest for search:

Layered products essentially comprising wood as the main or only constituent of a layer, next to another layer of synthetic resin or fibre-reinforced resin	B32B 21/08

B29C 66/7252

{hollow-walled}

Definition statement

This place covers:

Example 1, from

US6521072:

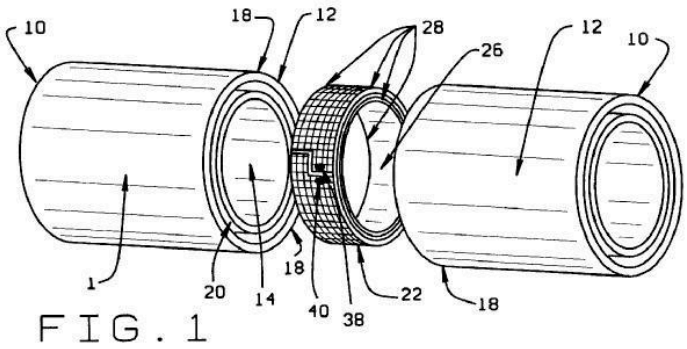

FIG. 1

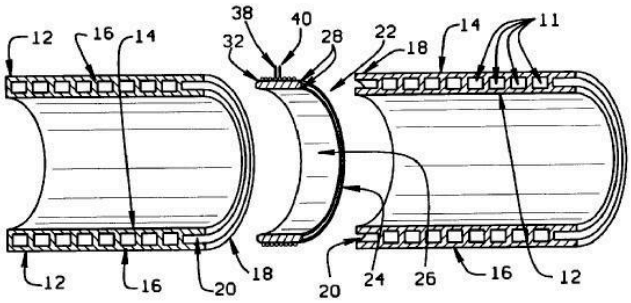

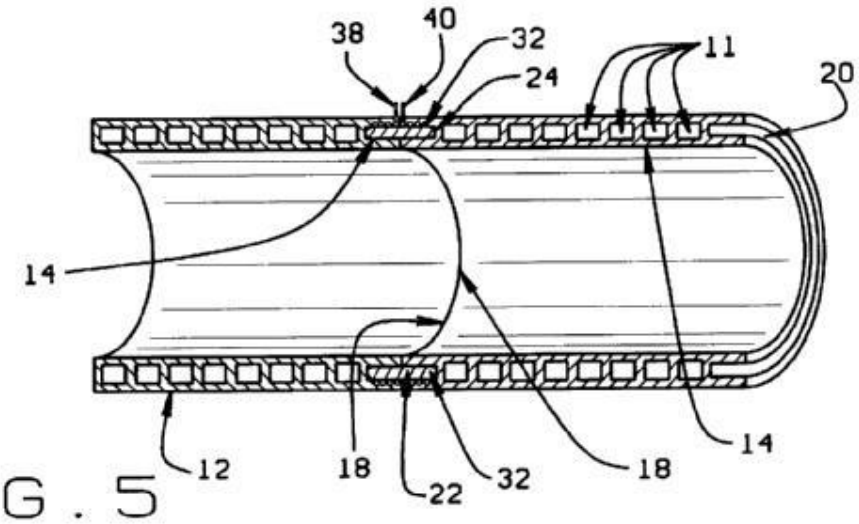

FIG. 5

B29C 66/72523

{multi-channelled or multi-tubular (B29C 66/438, B29C 66/5227 take precedence)}

Definition statement

This place covers:

Example 1, from

US5965238:

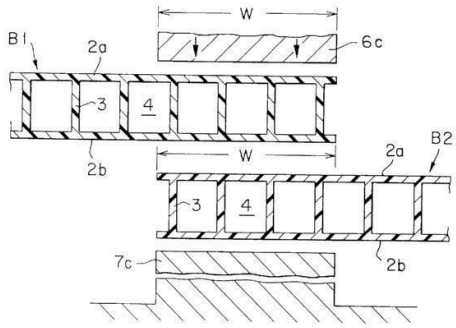

FIG. 15

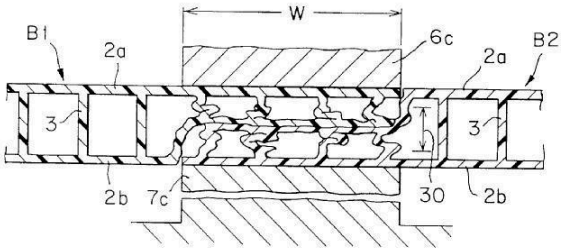

FIG. 17

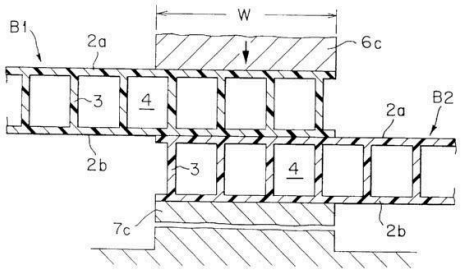

FIG. 16

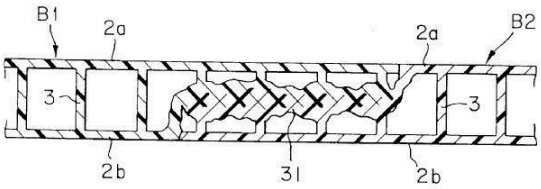

FIG. 18

B29C 66/72525

{comprising honeycomb cores}

Definition statement

This place covers:

Example 1, from

FR2557932:

Fig: 1

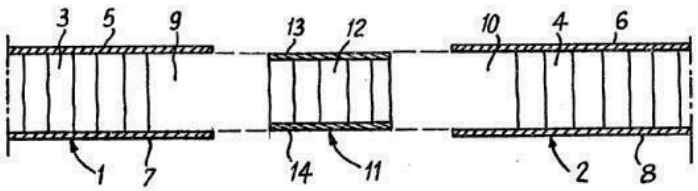

Fig: 2

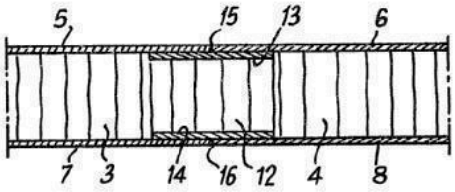

Example 2, from

DE29713027U:

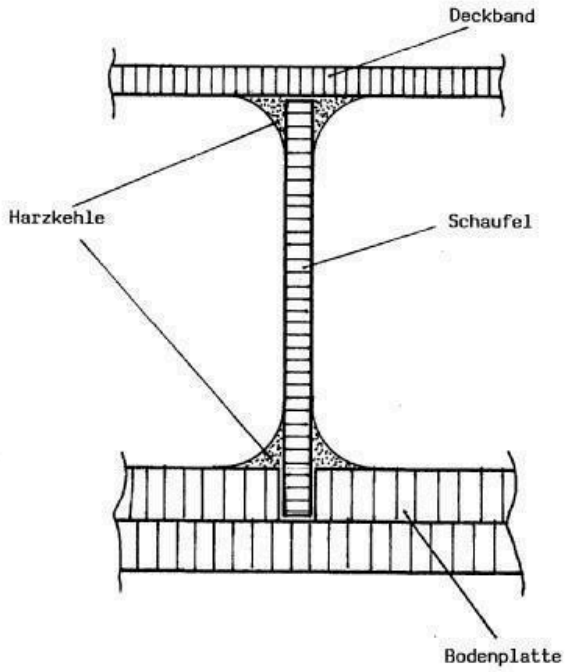

B29C 66/7254

{honeycomb structures}

Definition statement

This place covers:

Example 1, from

US6017413:

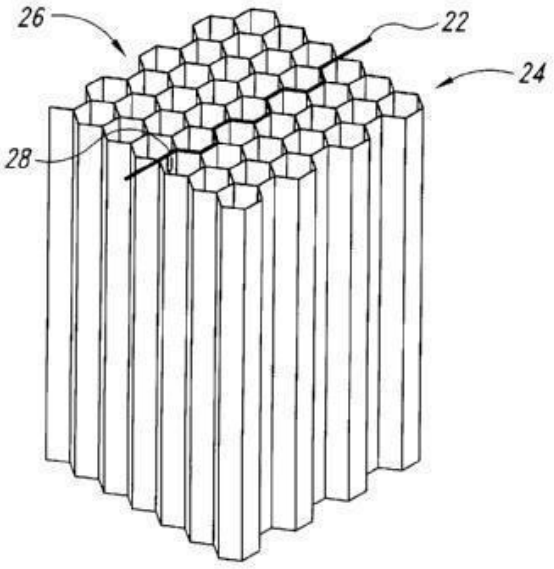

Fig. 1B

Example 2, from

WO2010071525:

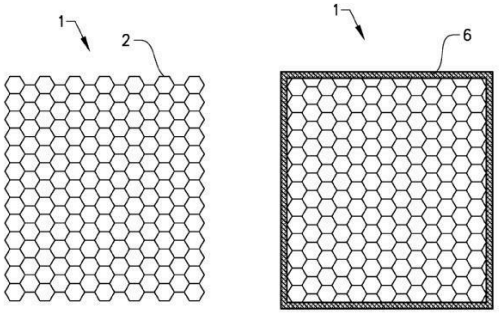

FIG. 1a FIG. 1b

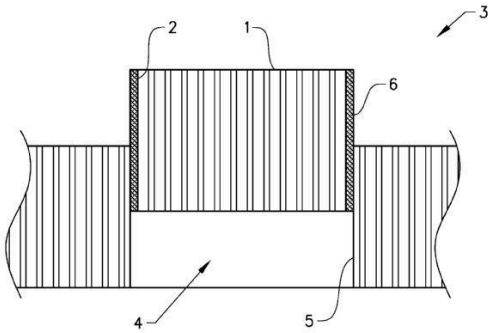

FIG. 1c

B29C 66/727

{being porous, e.g. foam}

Definition statement

This place covers:

Example 1, from

WO9614201:

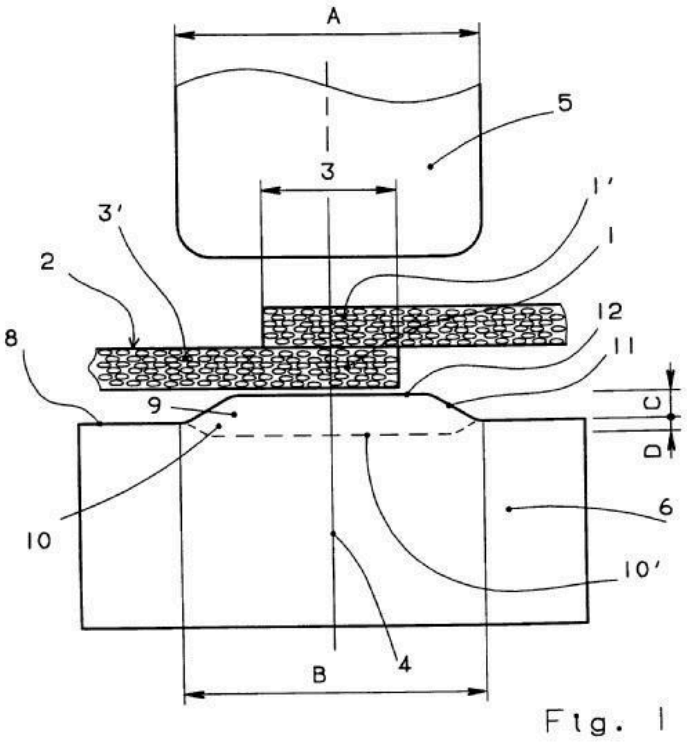

Fig. 1

References

Informative references

Attention is drawn to the following places, which may be of interest for search:

Making filtering elements	B01D 29/012, B01D 29/111

Special rules of classification

Indexing with B29K 2105/04 is optional.

B29C 66/729

{Textile or other fibrous material made from plastics}

Definition statement

This place covers:

Example 1, from

DE19602575:

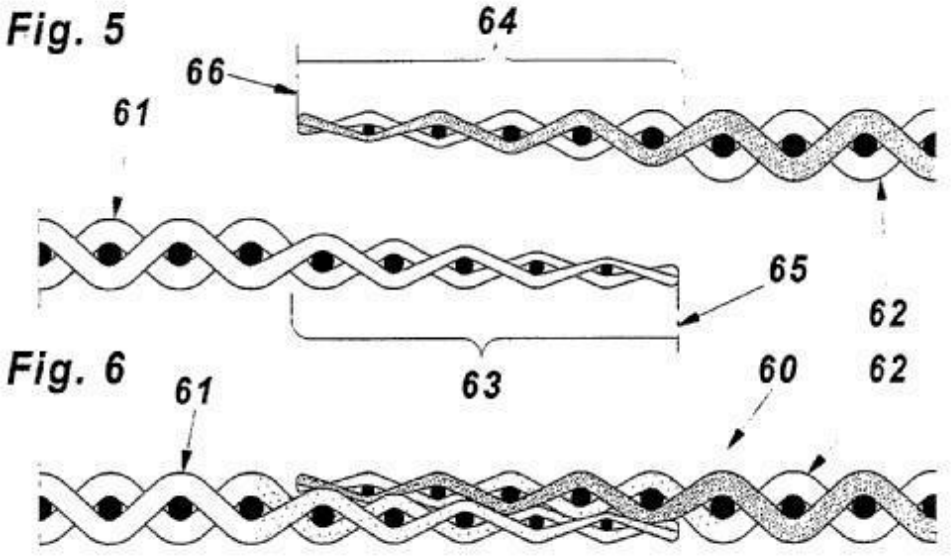

Example 2, from

EP1145657:

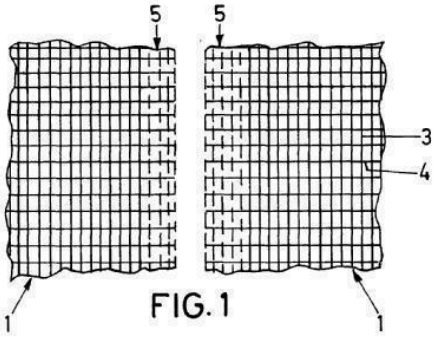

FIG.1

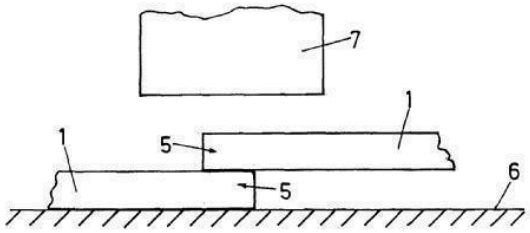

FIG.2

References

Informative references

Attention is drawn to the following places, which may be of interest for search:

Garment hems or seams made by welding or gluing	A41D 27/245
Joining garments or blanks by gluing or welding	A41H 43/04

Seaming textile materials	D06H 5/00

B29C 66/7294

{Non woven mats, e.g. felt}

Definition statement

This place covers:

Example 1, from

DE4024252:

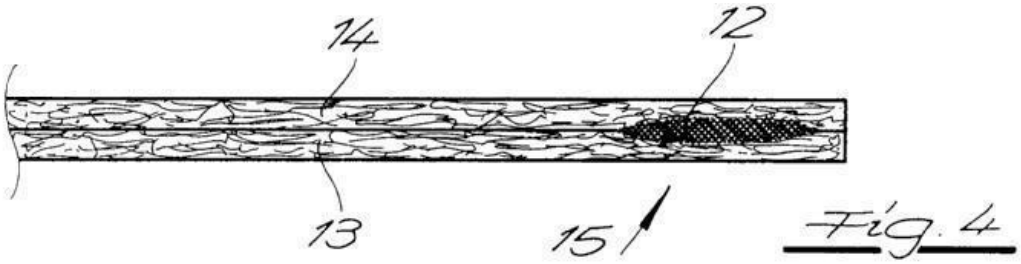

Example 2, from

JP2264065:

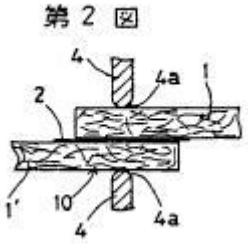

References

Informative references

Attention is drawn to the following places, which may be of interest for search:

Non-woven fabrics formed wholly or mainly of staple fibres or like relatively short fibres, from fleece or layers composed of fibres without existing or potential cohesive properties, by welding together the fibres, e.g. by partially melting or dissolving	D04H 1/54

B29C 66/73

{characterised by the intensive physical properties of the material of the parts to be joined, by the optical properties of the material of the parts to be joined, by the extensive physical properties of the parts to be joined, by the state of the material of the parts to be joined or by the material of the parts to be joined being a thermoplastic or a thermoset}

Special rules of classification

Indexing in B29K 2995/00 is optional.

B29C 66/73341

{at least one of the parts to be joined being glossy or reflective}

Special rules of classification

Indexing with B29K 2995/0022&B29K 2995/003 is optional.

B29C 66/73361

{at least one of the parts to be joined being opaque to visible light}

Special rules of classification

Indexing with B29K 2995/0025 is optional.

B29C 66/73365

{at least one of the parts to be joined being transparent or translucent to visible light}

Special rules of classification

Indexing with B29K 2995/0026&B29K 2995/0029 is optional.

B29C 66/73715

{heat-shrinkable}

Special rules of classification

Indexing with B29K 2995/0049 is optional.

B29C 66/7375

{uncured, partially cured or fully cured}

Special rules of classification

Indexing with B29K 2105/24, B29K 2105/243 , B29K 2105/246 is optional.

B29C 66/739

{characterised by the material of the parts to be joined being a thermoplastic or a thermoset}

Special rules of classification

Joining a thermoplastic part to a thermoset part is to be classified both in B29C 66/7392 and in B29C 66/7394.

B29C 66/742

{to metals or their alloys}

References

Informative references

Attention is drawn to the following places, which may be of interest for search:

Vehicle superstructures characterised by the material thereof, characterised by combining metal and synthetic material, preformed metal and synthetic material elements being joined together	B62D 29/005
Connecting arrangements or other fittings specially adapted to be made of plastics or to be used with pipes made of plastics, for joints between metal and plastic pipes	F16L 47/24

Special rules of classification

Indexing from B29K 2705/00 - B29K 2705/14 is optional.

B29C 66/7428

{Transition metals or their alloys}

Definition statement

This place covers:

This group covers e.g. Titanium.

B29C 66/744

{to elements other than metals}

Special rules of classification

Indexing from B29K 2707/00 - B29K 2707/04 is optional.

B29C 66/746

{to inorganic materials not provided for in groups B29C 66/742 - B29C 66/744}

Special rules of classification

Indexing from B29K 2709/00 - B29K 2709/12 is optional.

B29C 66/7465

{Glass}

Definition statement

This place covers:

Example 1, from

US2010227175:

Fig.2

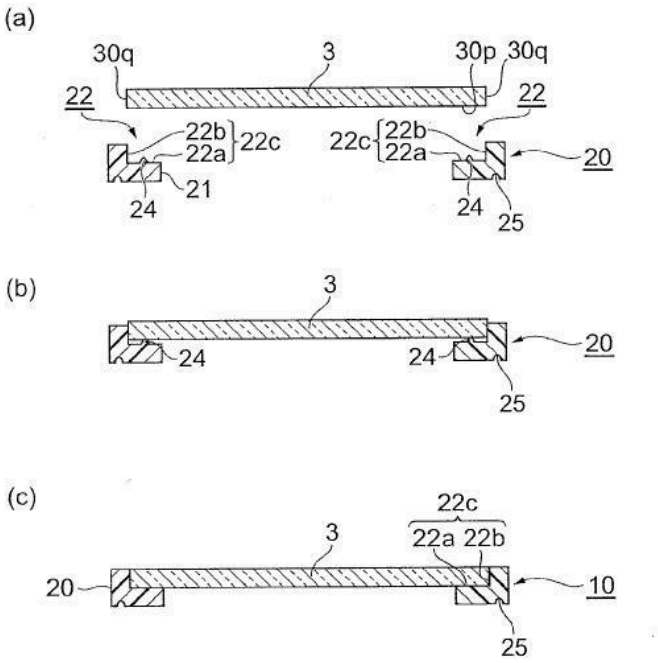

B29C 66/748

{to natural products or their composites, not provided for in groups B29C 66/742 - B29C 66/746}

Special rules of classification

Indexing from B29K 2711/00 - B29K 2711/14 is optional.

B29C 66/7487

{Wood}

Definition statement

This place covers:

Example 1, from

WO9601377:

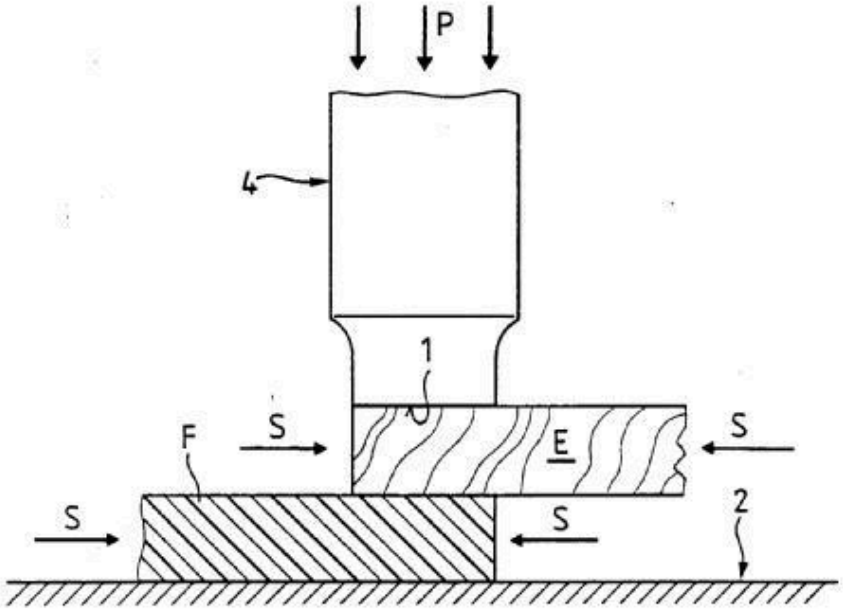

FIG. 3

B29C 66/8122

{characterised by the composition of the material constituting the pressing elements, e.g. constituting the welding jaws or clamps}

References

Informative references

Attention is drawn to the following places, which may be of interest for search:

Moulds or cores in general, characterised by the material	B29C 33/38

Special rules of classification

Combination of B29C 66/8122 with the relevant composition index from B29K 2801/00 - B29K 2911/14 is compulsory.

For instance, "characterised by the composition of the material constituting the welding jaws being PTFE" has to be classified as: B29C 66/8122; B29K 2827/18.

B29C 66/81241

{being porous or sintered}

Definition statement

This place covers:

Example 1, from

US3311525:

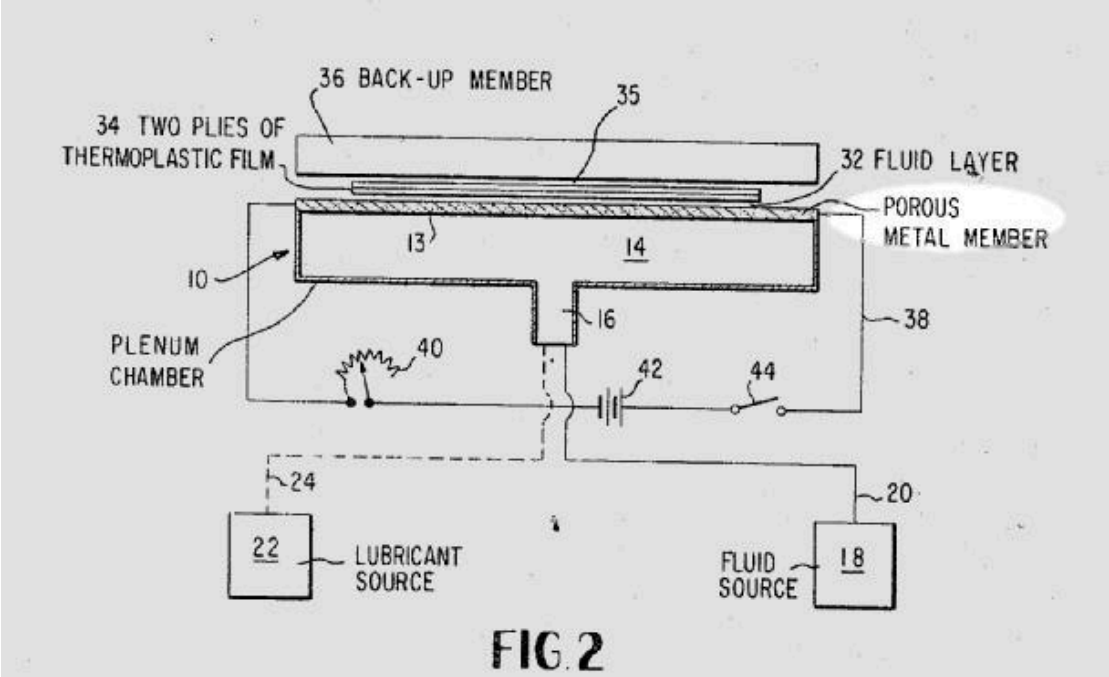

FIG. 2

B29C 66/8126

{characterised by the intensive physical properties or by the optical properties of the material constituting the pressing elements, e.g. constituting the welding jaws or clamps}

Special rules of classification

Indexing in B29K 2995/00 is optional.

B29C 66/81267

{Transparent to electromagnetic radiation, e.g. to visible light}

References

Informative references

Attention is drawn to the following places, which may be of interest for search:

Heating or curing by wave energy or particle radiation using transparent moulds	B29C 35/0888

B29C 66/81415

{being bevelled}

Definition statement

This place covers:

Example 1, from

DE19813121:

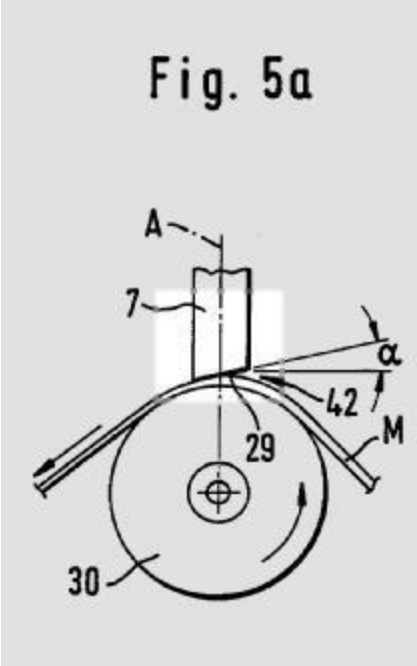

B29C 66/81417

{being V-shaped}

Definition statement

This place covers:

Example 1, from

FR2807392:

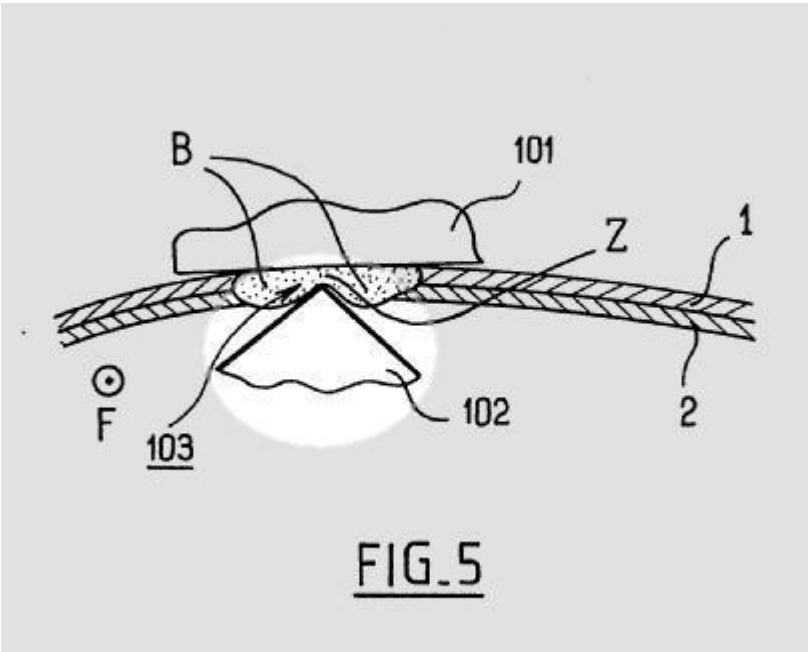

B29C 66/81419

{and flat}

Definition statement

This place covers:

Example 1, from

FR2874188:

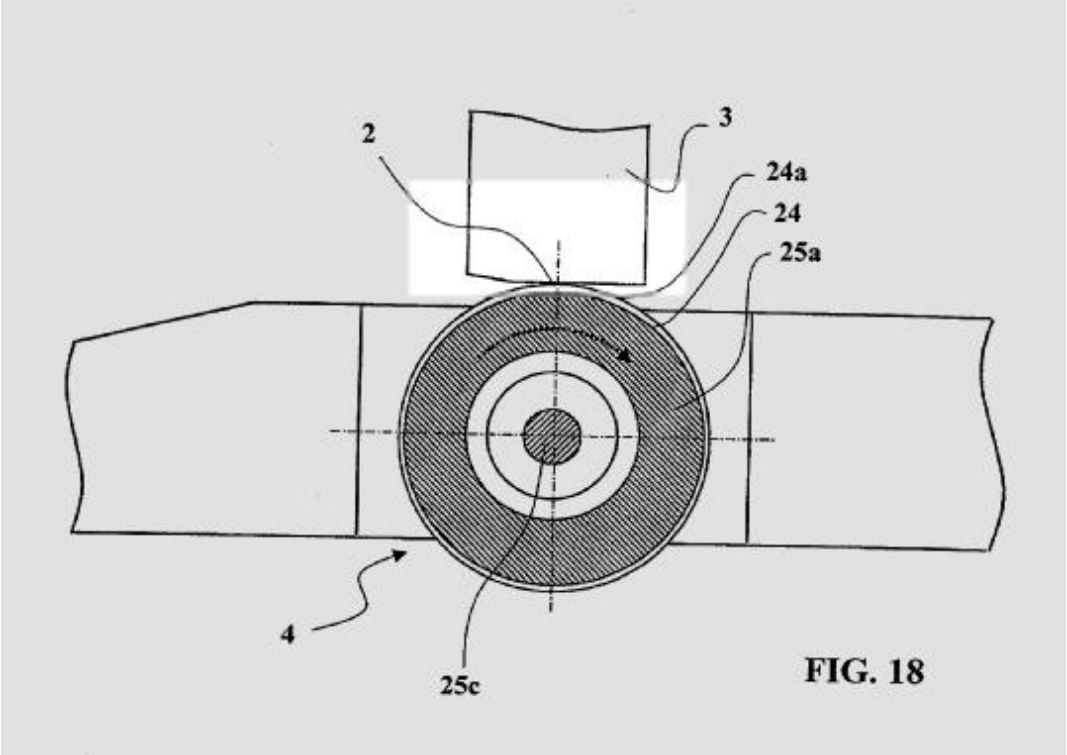

B29C 66/81422

{being convex}

Definition statement

This place covers:

Example 1, from

GB2305391:

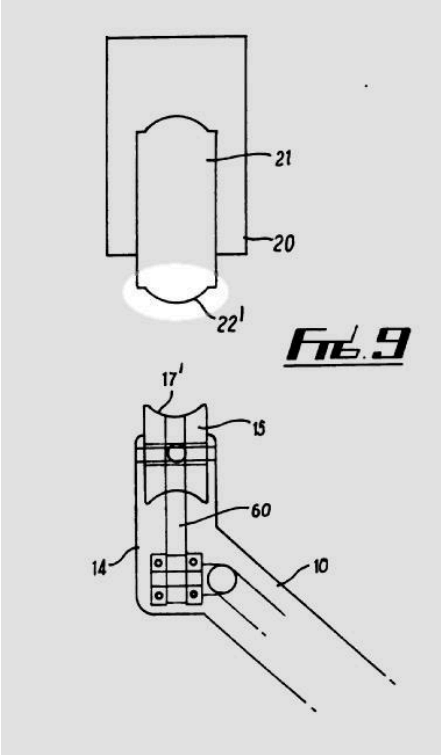

Special rules of classification

N.B.: the convexity of the transverse cross-section of a roller, cylinder or drum (i.e. the cross-section transversal to its axis) is not considered to correspond to inventive subject-matter and as such is not covered by this group.

B29C 66/81423

{being concave}

Definition statement

This place covers:

Example 1, from

GB2305391:

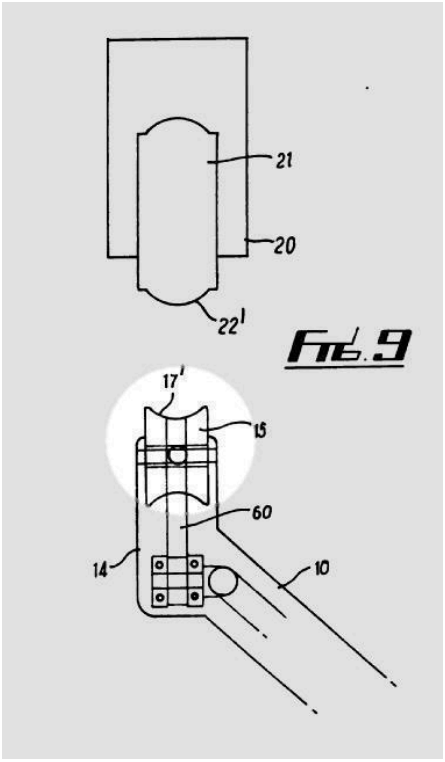

Example 2, from

US3367809:

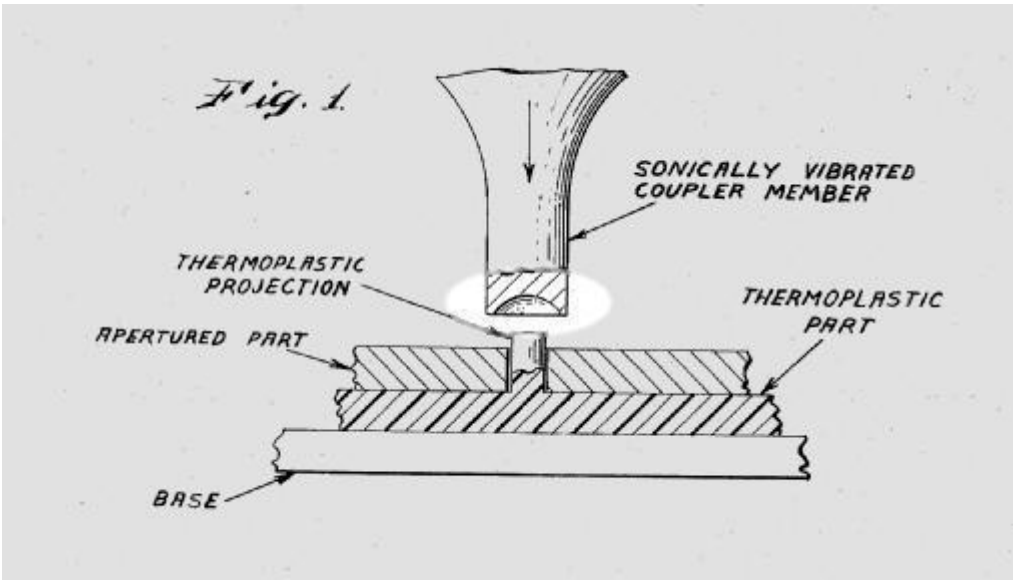

Example 3, from

WO2005042232:

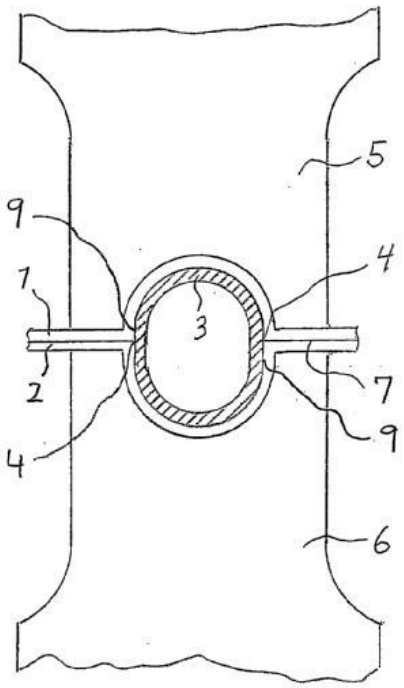

B29C 66/81433

{being toothed, i.e. comprising several teeth or pins (comprising a single tooth B29C 66/81429), or being patterned}

Definition statement

This place covers:

Example 1, from

US4398986:

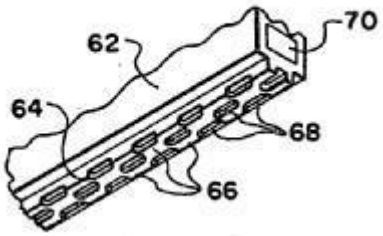

B29C 66/81435

{comprising several parallel ridges, e.g. for crimping (comprising a single ridge B29C 66/81427)}

Definition statement

This place covers:

Example 1, from

EP2113371:

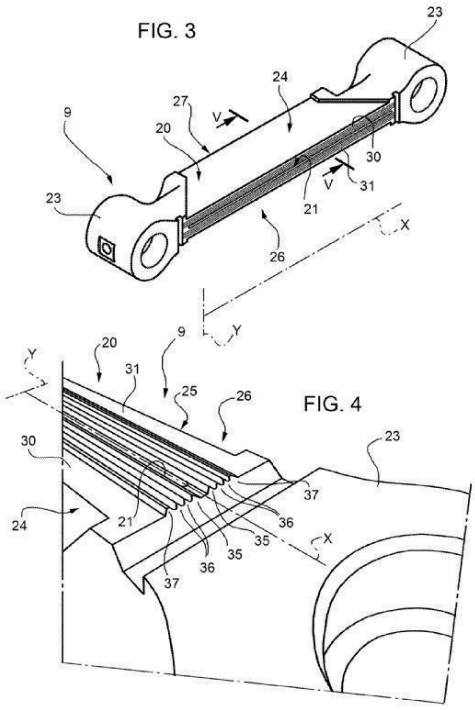

Example 2, from

US2010199602:

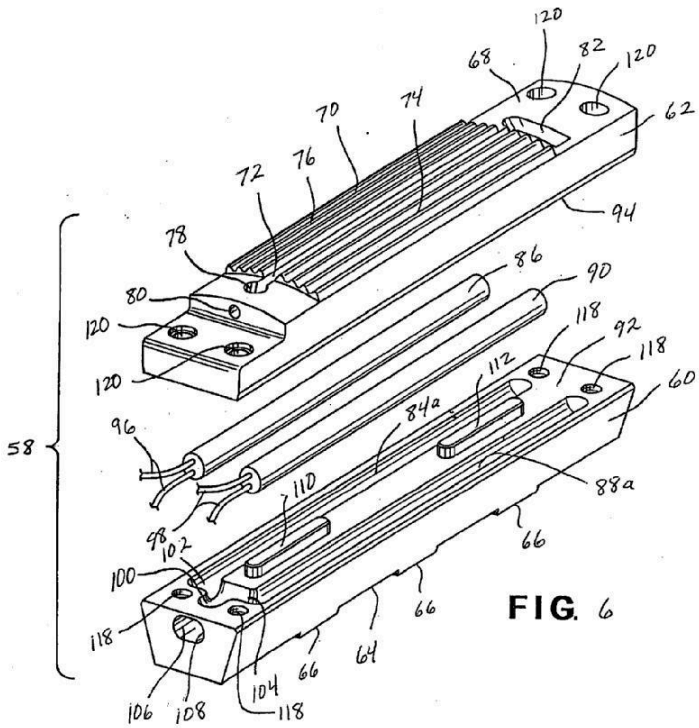

FIG. 6

B29C 66/81453

{being made of flexible slats, flexible fins, flexible bristles or springs, e.g. coiled springs}

Definition statement

This place covers:

Example 1, from

DE3912198:

FIG.1

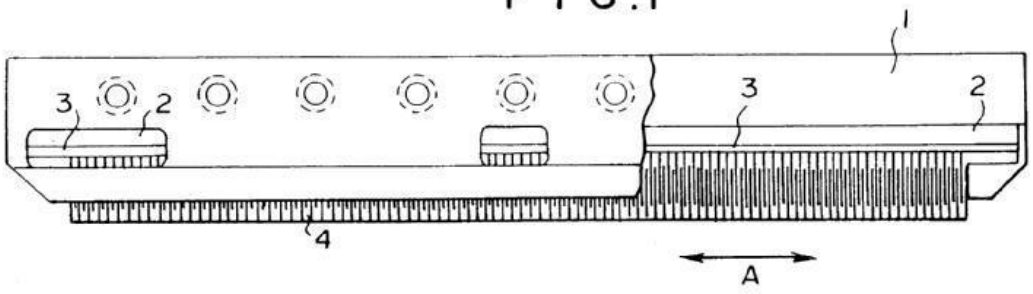

FIG.5

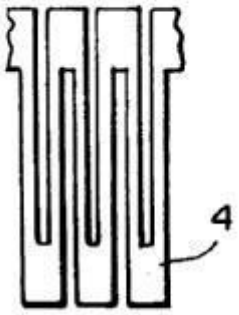

B29C 66/81455

{being a fluid inflatable bag or bladder, a diaphragm or a vacuum bag for applying isostatic pressure (inflatable element positioned between the joining tool and a backing-up part B29C 66/82421)}

Definition statement

This place covers:

Example 1, from

WO2010069599:

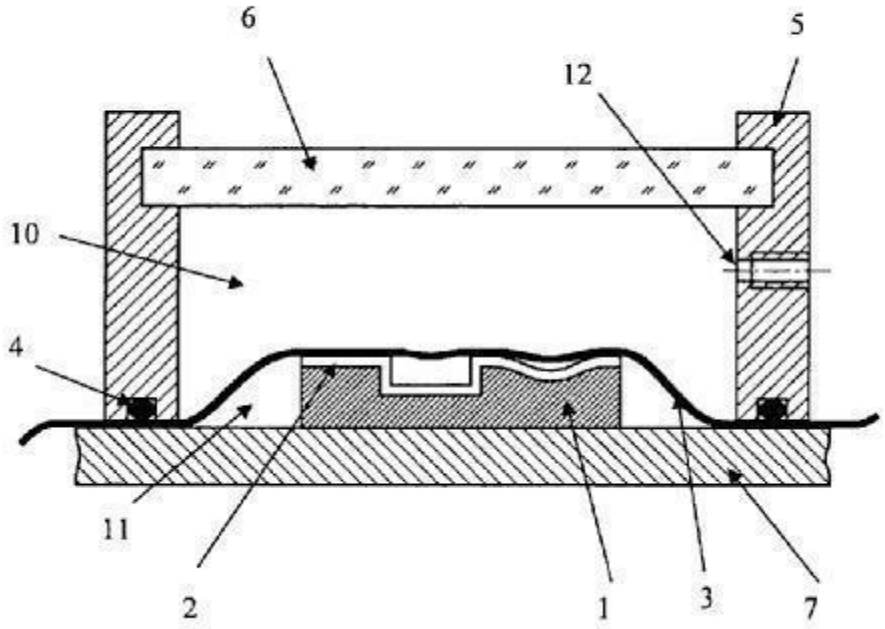

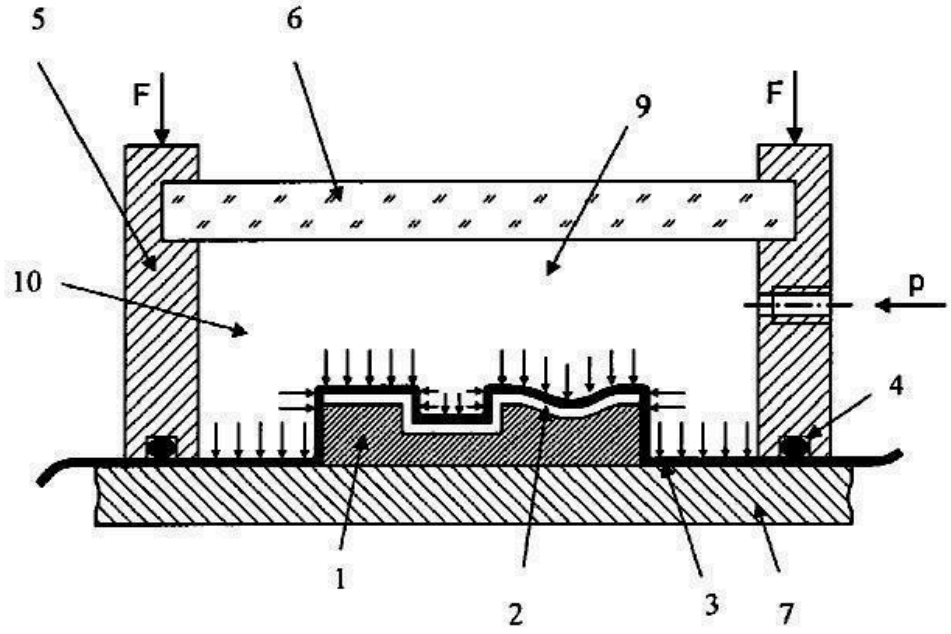

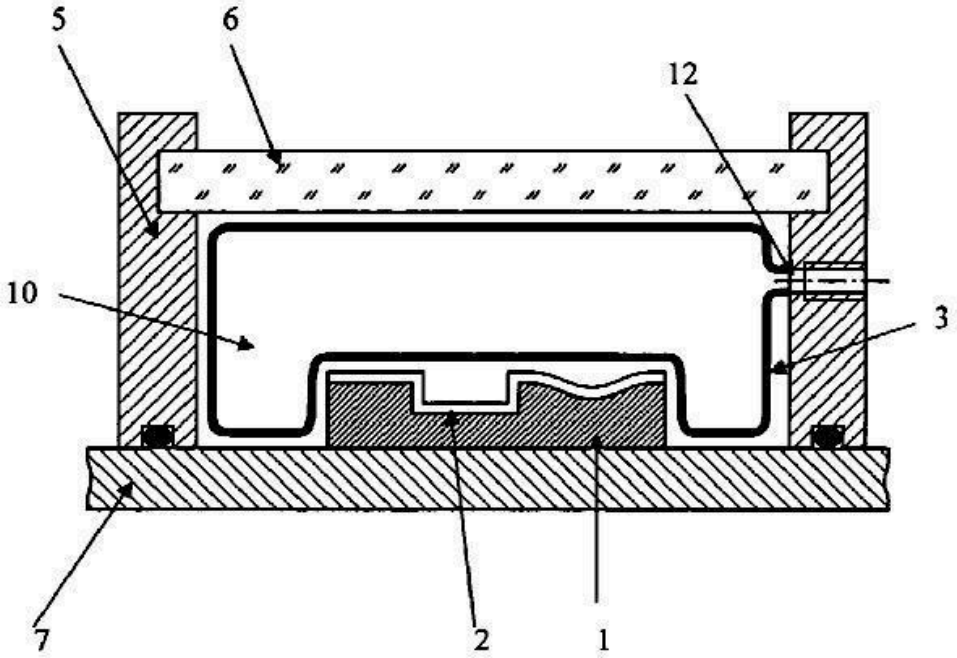

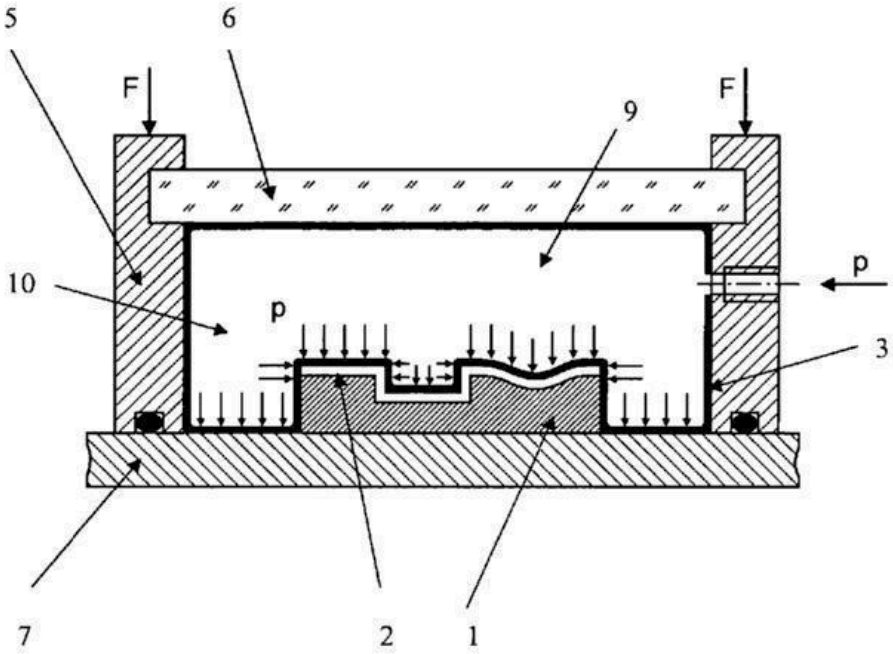

Example 2, from

EP1306196:

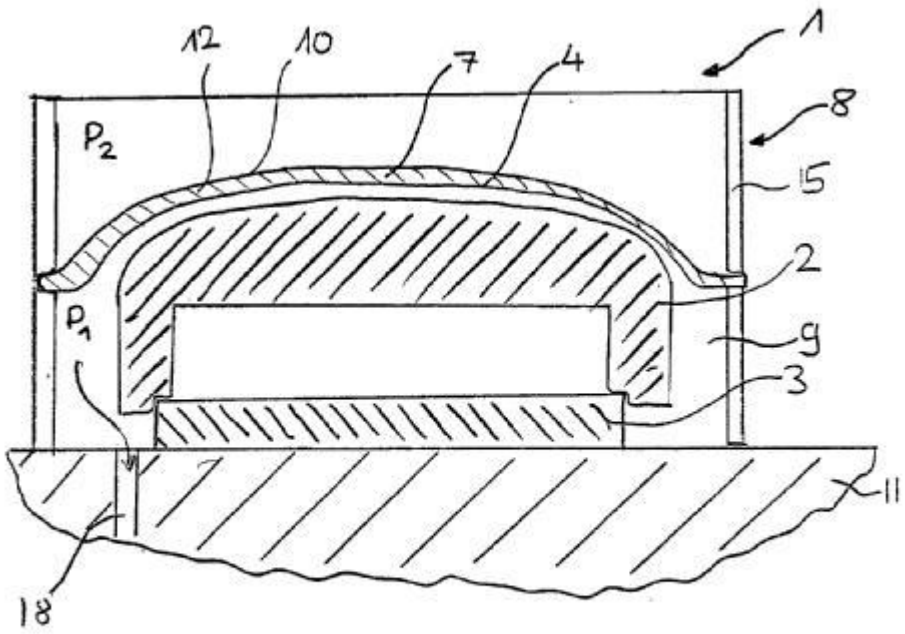

FIG.5

References

Informative references

Attention is drawn to the following places, which may be of interest for search:

Bags for isostatic pressing, for compression moulding	B29C 43/3642
Applying pressure through the wall of an inflated bag or diaphragm, for thermoforming	B29C 51/28
Lining or sheathing using sheet or web-like material applied by "rubber" bag or diaphragm	B29C 63/16
Devices for gluing soles on shoe bottoms using flexible diaphragm pressing devices	A43D 25/07
Pressing means in the form of a flexible element, e.g. diaphragm, urged by fluid pressure	B30B 5/02
Vacuum pressing, for laminating	B32B 37/1018

B29C 66/81457

{comprising a block or layer of deformable material, e.g. sponge, foam, rubber (pressing elements supported or backed-up by resilient material B29C 66/8161)}

Definition statement

This place covers:

Example 1, from

EP1027981:

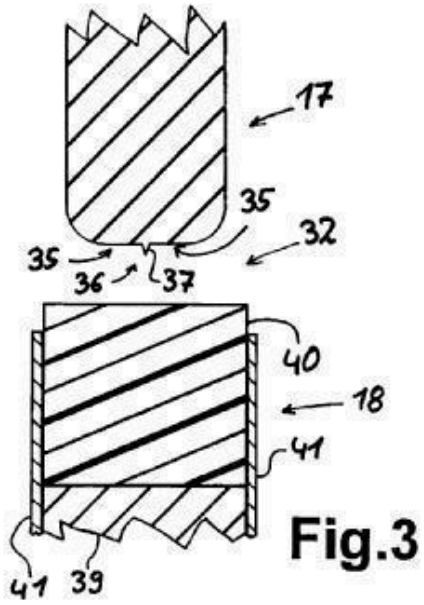

Fig.3

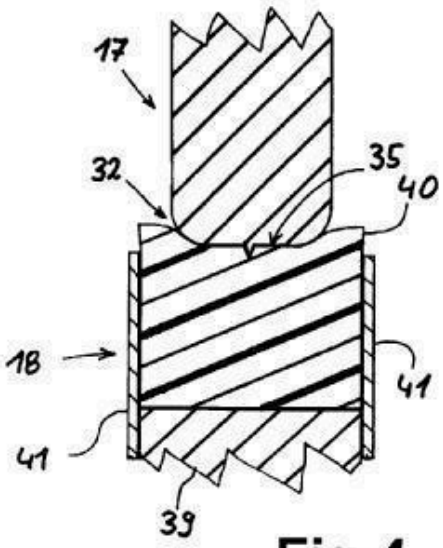

Fig.4

Example 2, from

US3830681:

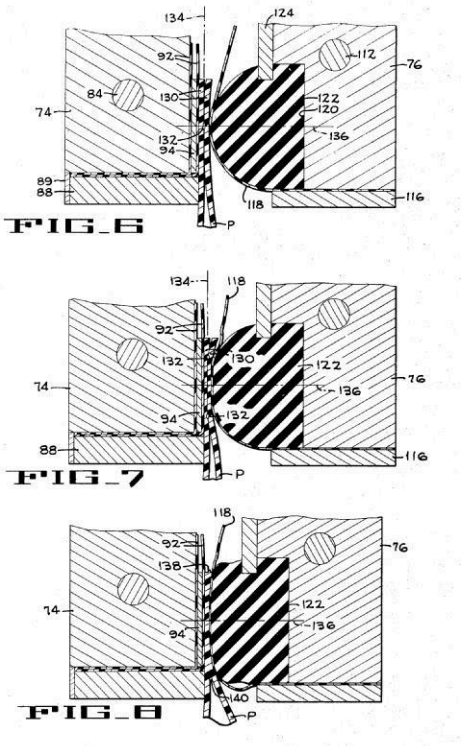

B29C 66/81459

{being a filled deformable bladder, e.g. bladder filled with oil, with granules or with a meltable solid material (B29C 66/81455 takes precedence)}

Definition statement

This place covers:

Example 1, from

US2806116:

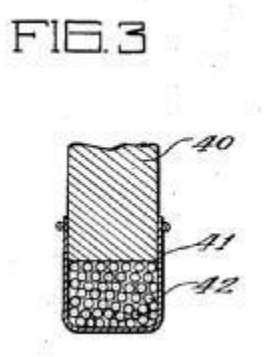

B29C 66/81461

{being multi-lamellar or segmented, i.e. comprising a plurality of strips, plates or stacked elements}

Definition statement

This place covers:

Example 1, from

EP2286986:

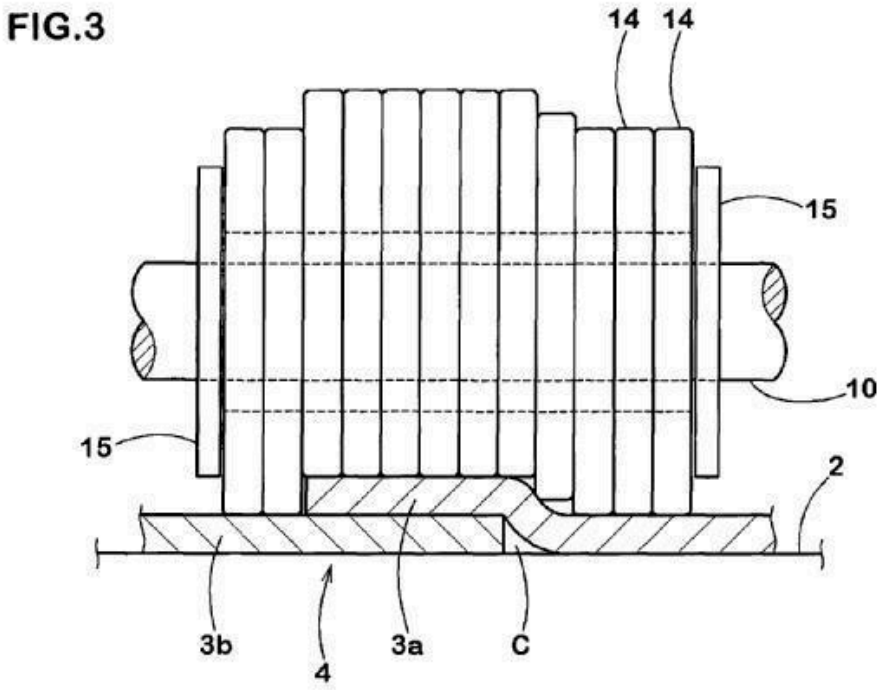

References

Informative references

Attention is drawn to the following places, which may be of interest for search:

Vice jaws being composed of a plurality of parts adapting to the shape of the workpiece, the parts having a linear movement	B25B 1/2421

B29C 66/81465

{one placed behind the other in a single row in the feed direction}

Definition statement

This place covers:

Example 1, from

JP1061228:

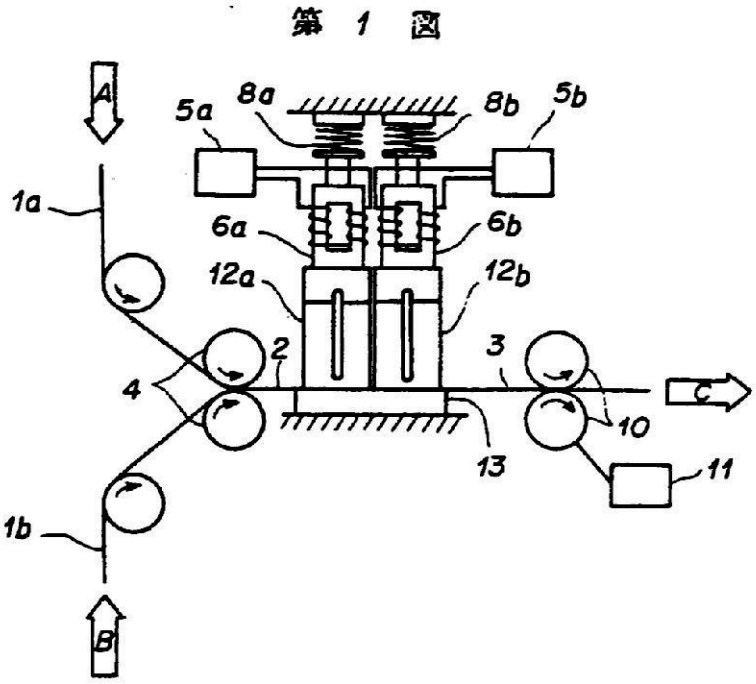

B29C 66/81467

{arranged in an offset pattern}

Definition statement

This place covers:

Example 1, from

US2010116409:

FIG. 11

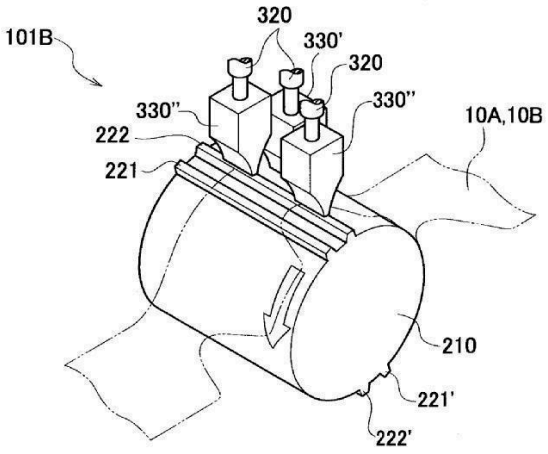

Example 2, from

WO9828123:

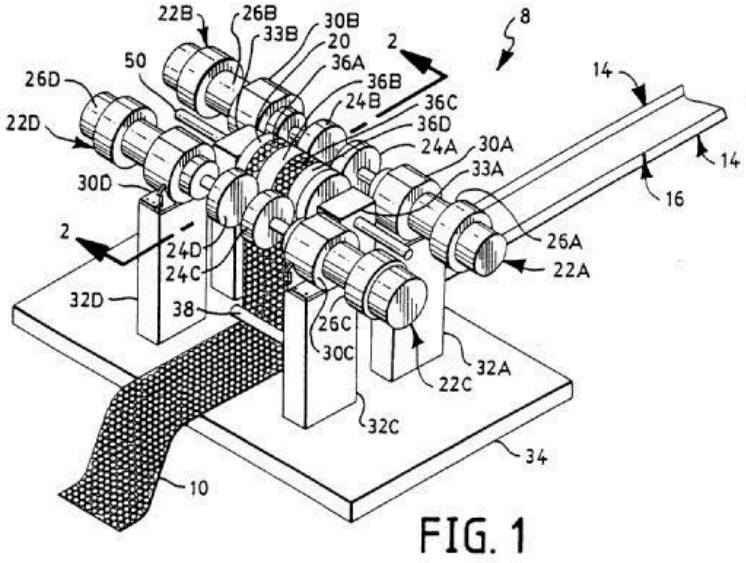

FIG. 1

B29C 66/81469

{one placed next to the other in a single line transverse to the feed direction, e.g. shoulder to shoulder sonotrodes}

Definition statement

This place covers:

Example 1, from

US2010116409:

FIG. 10

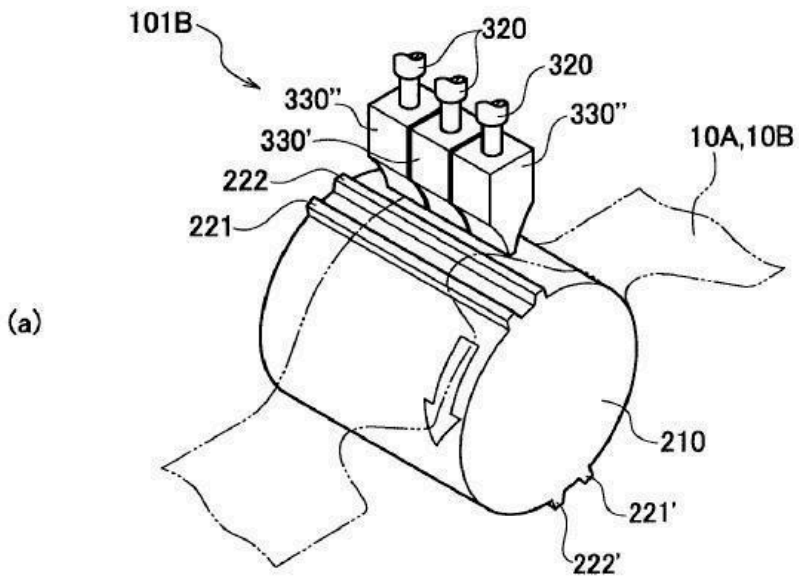

B29C 66/8161

{said pressing elements being supported or backed-up by springs or by resilient material}

Definition statement

This place covers:

Example 1, from

EP1410988:

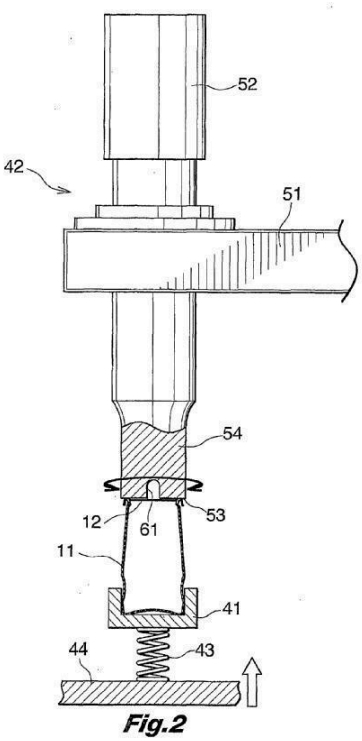

Fig.2

B29C 66/81611

{by resilient material}

Definition statement

This place covers:

Example 1, from

DE3236164:

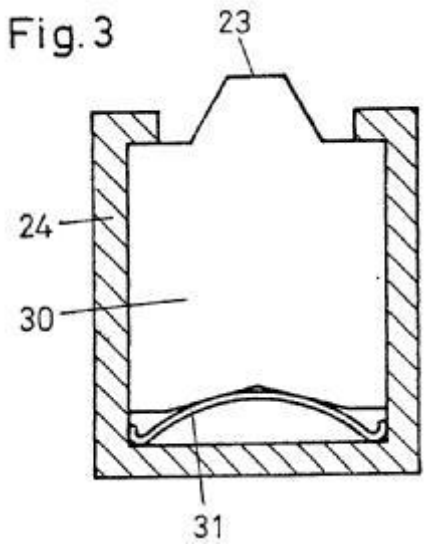

B29C 66/8163

{Self-aligning to the joining plane, e.g. mounted on a ball and socket}

Definition statement

This place covers:

Example 1, from

DE19540119:

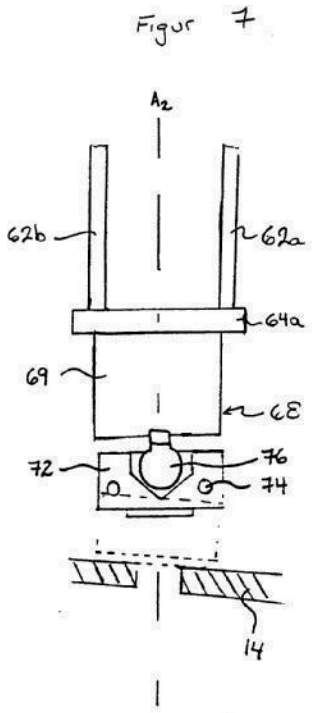

Example 2, from

FR2829962:

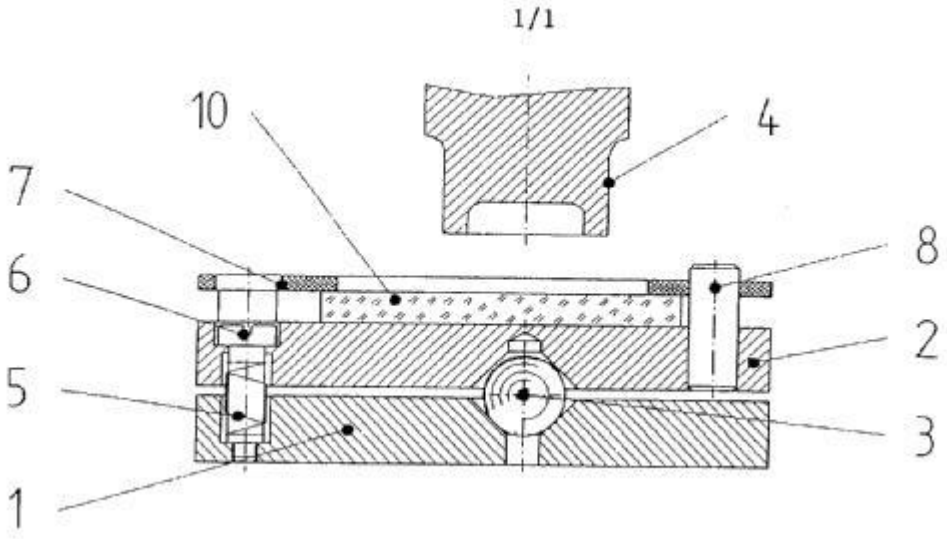

B29C 66/8165

{Carrier plates for mounting joining tool parts, e.g. for re-arranging the tool parts to make other forms}

Definition statement

This place covers:

Example 1, from

DE20019000U:

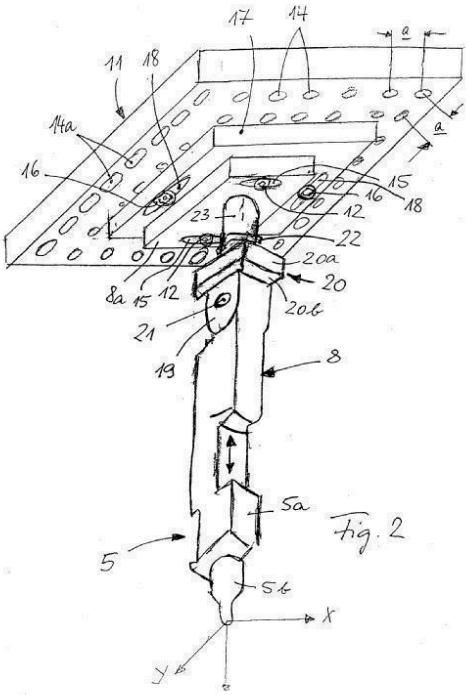

Example 2, from

GB885309:

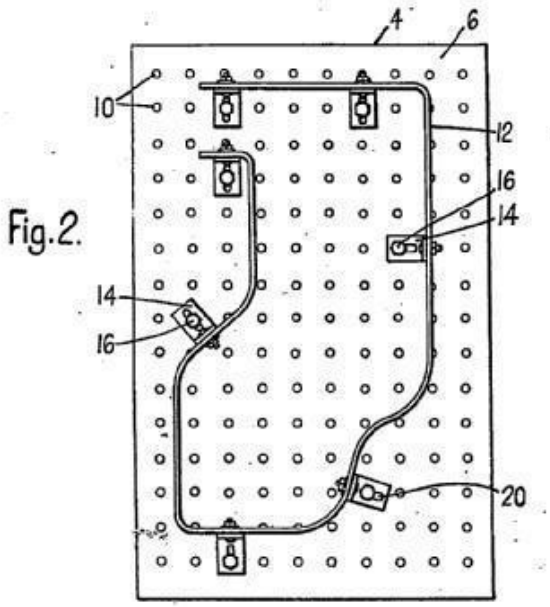

Fig.2.

Example 3, from

FR1310917:

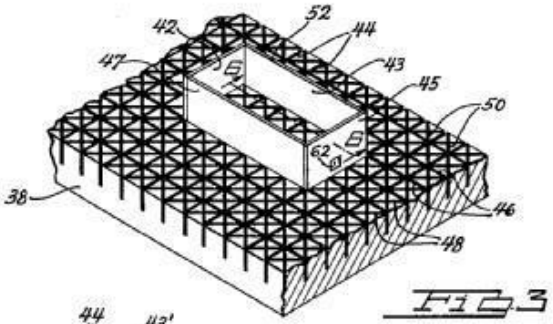

FIG.3

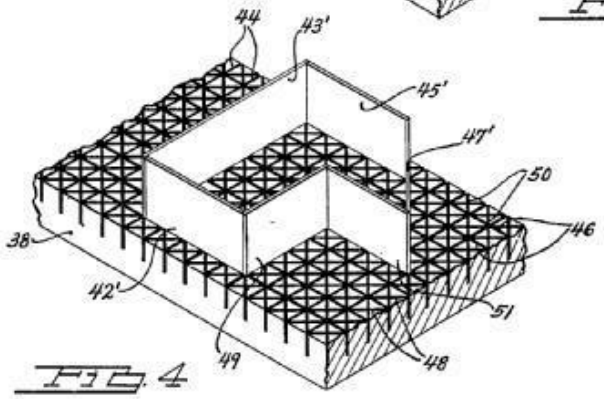

FIG. 4

B29C 66/8167

{Quick change joining tools or surfaces}

Definition statement

This place covers:

Example 1, from

DE20317289U:

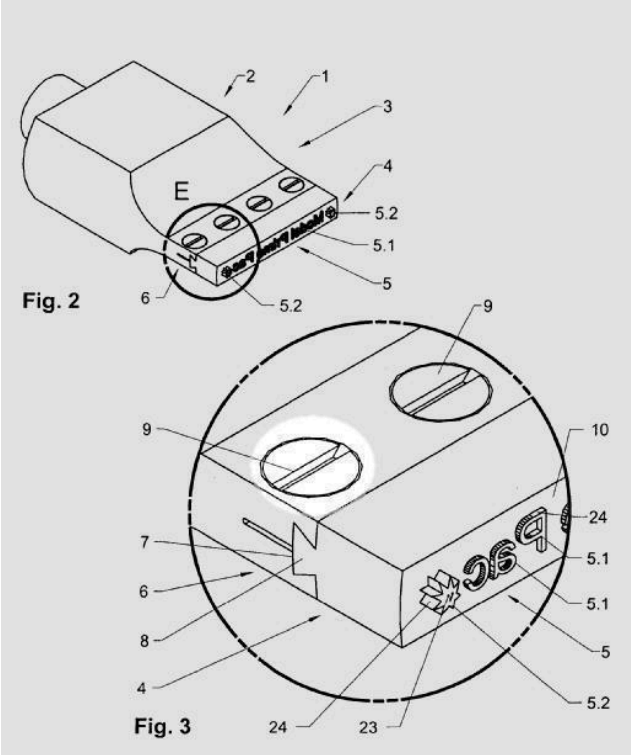

Example 2, from

US5421923:

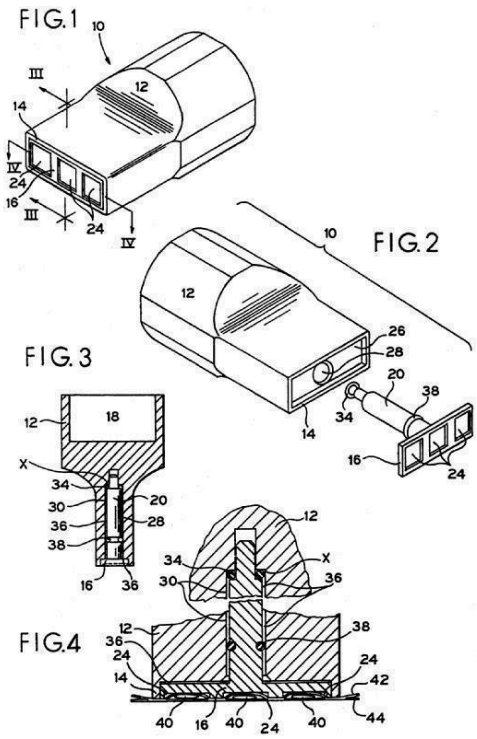

Example 3, from

US3426951:

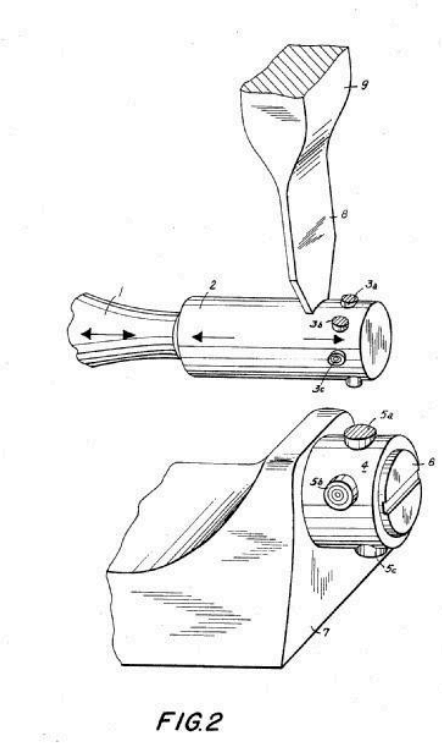

B29C 66/81811

{of the welding jaws}

Definition statement

This place covers:

Example 1, from

GB952042:

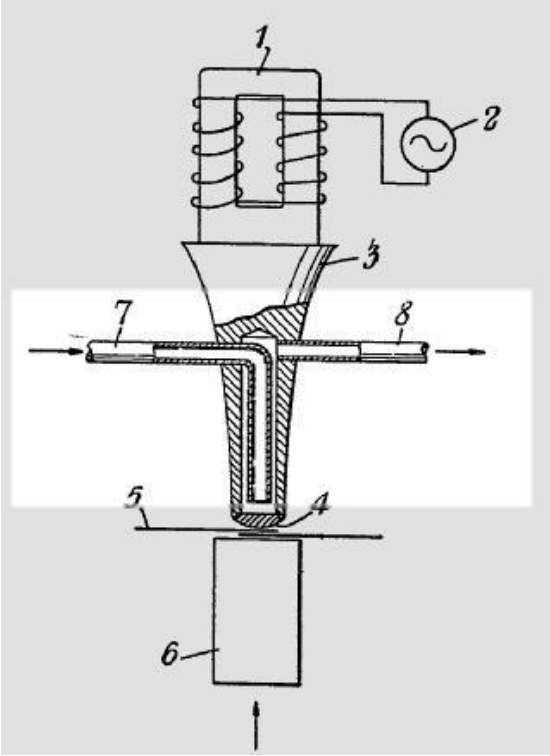

B29C 66/81812

{the welding jaws being cooled from the outside, e.g. by blowing a gas or spraying a liquid}

Definition statement

This place covers:

Example 1, from

JP6008330:

【図2】

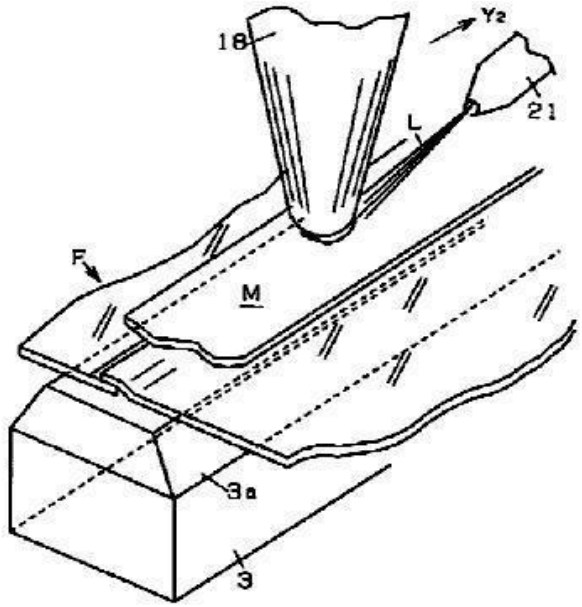

Example 2, from

US4426244:

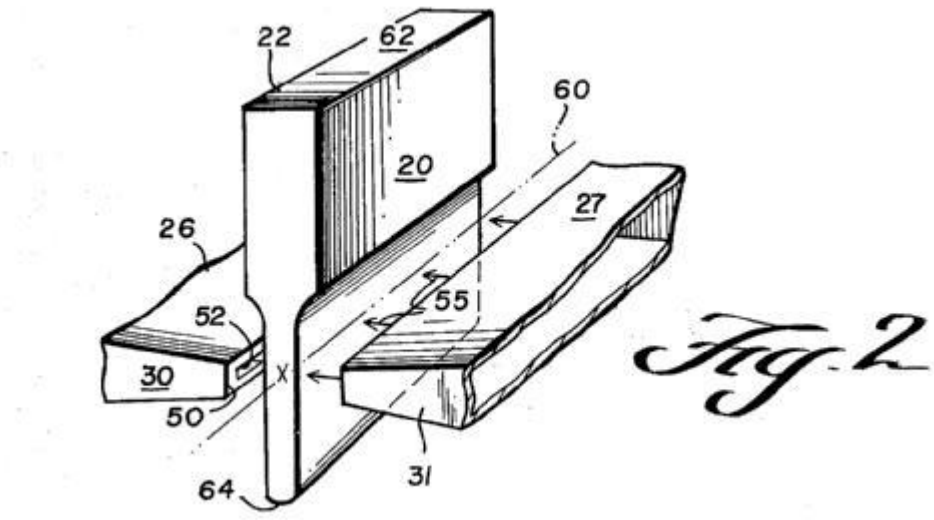

Fig. 2

B29C 66/81815

{of the clamps}

Definition statement

This place covers:

Example 1, from

FR2330518:

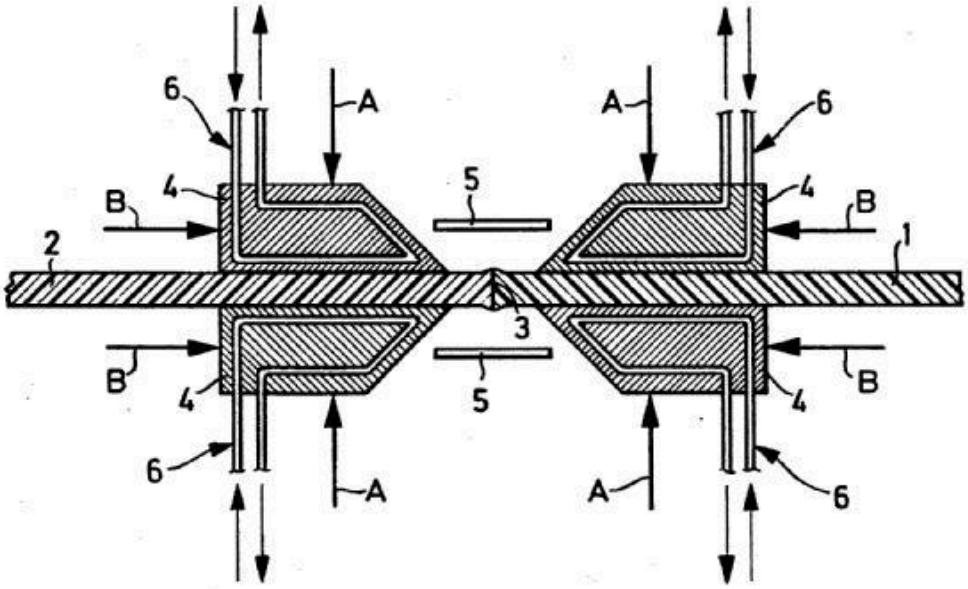

B29C 66/81821

{of the welding jaws}

Definition statement

This place covers:

Example 1, from

FR1098132:

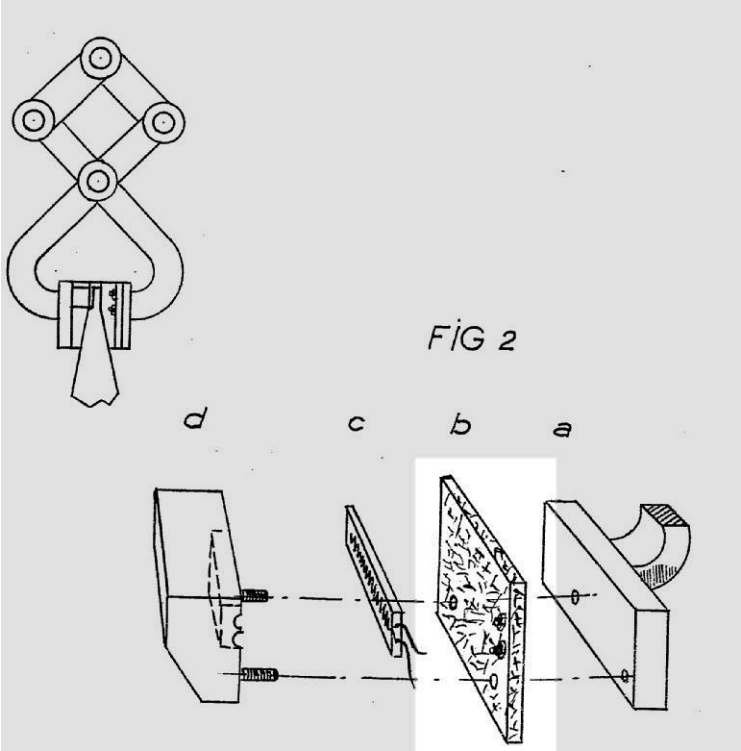

B29C 66/8222

{Pinion or rack mechanisms}

Definition statement

This place covers:

Example 1, from

WO9738905:

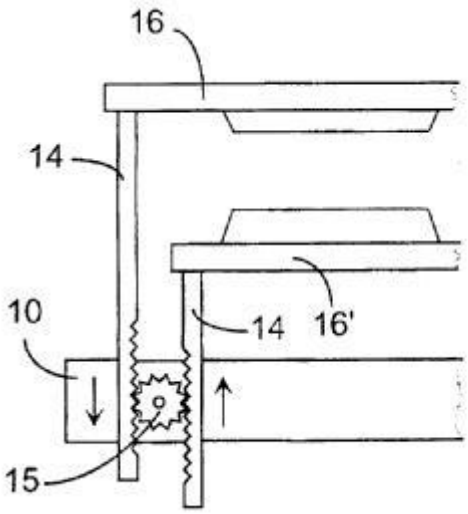

Fig.3

B29C 66/8223

{Worm or spindle mechanisms}

Definition statement

This place covers:

Example 1, from

DE4241974:

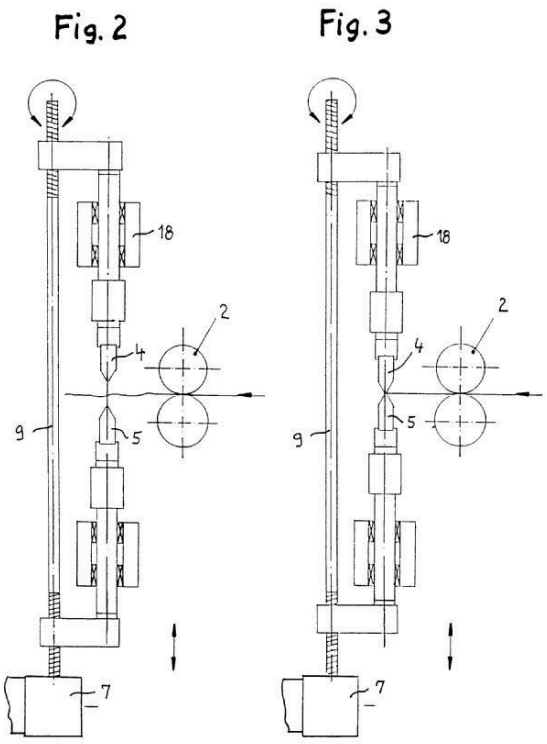

B29C 66/8224

{Chain or sprocket drives}

Definition statement

This place covers:

Example 1, from

US6308493:

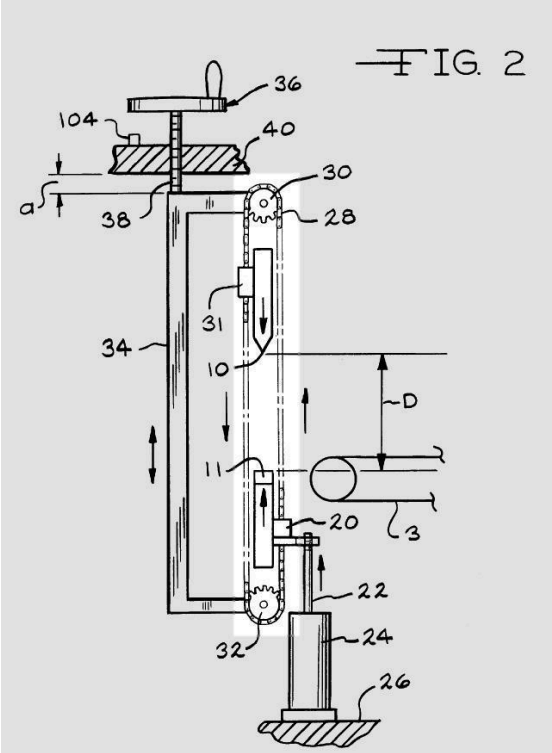

B29C 66/8225

{Crank mechanisms}

Definition statement

This place covers:

Example 1, from

DE4425207:

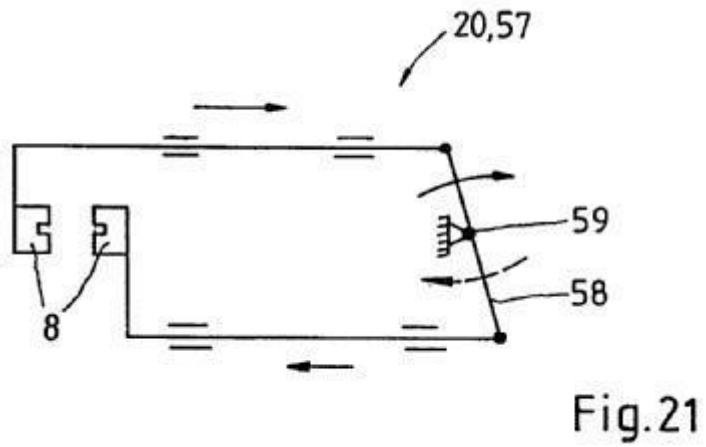

Fig.21

Example 1, from

DE4425207:

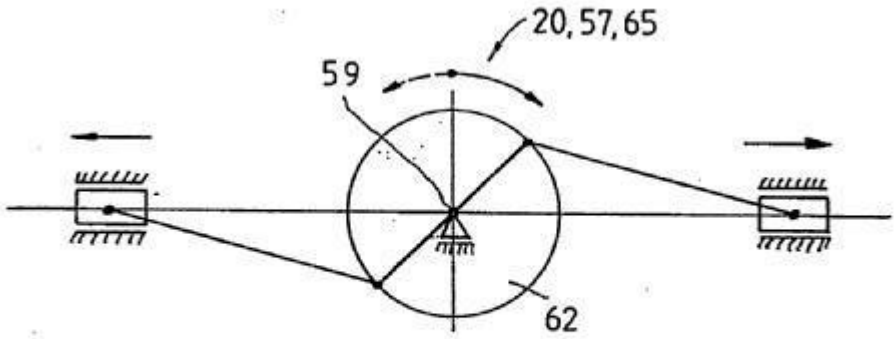

Fig. 29

B29C 66/8226

{Cam mechanisms; Wedges; Eccentric mechanisms}

Definition statement

This place covers:

Example 1, from

JP2002144434:

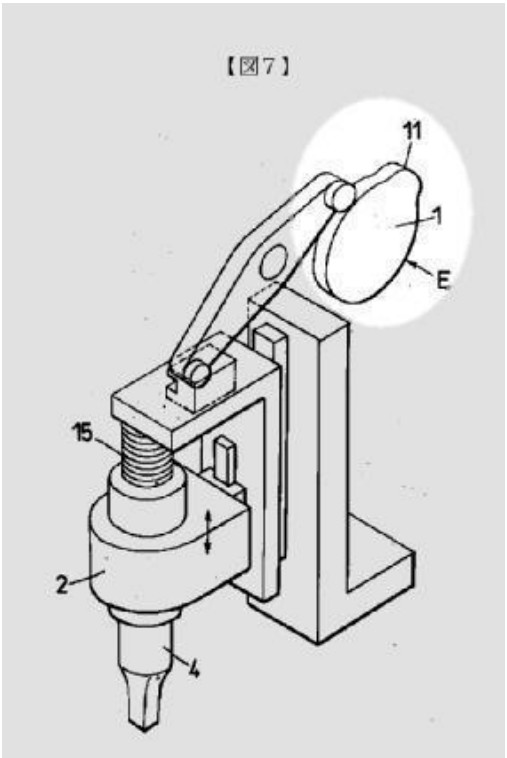

B29C 66/82261

{Wedges}

Definition statement

This place covers:

Example 1, from

EP0344137:

Fig. 1f

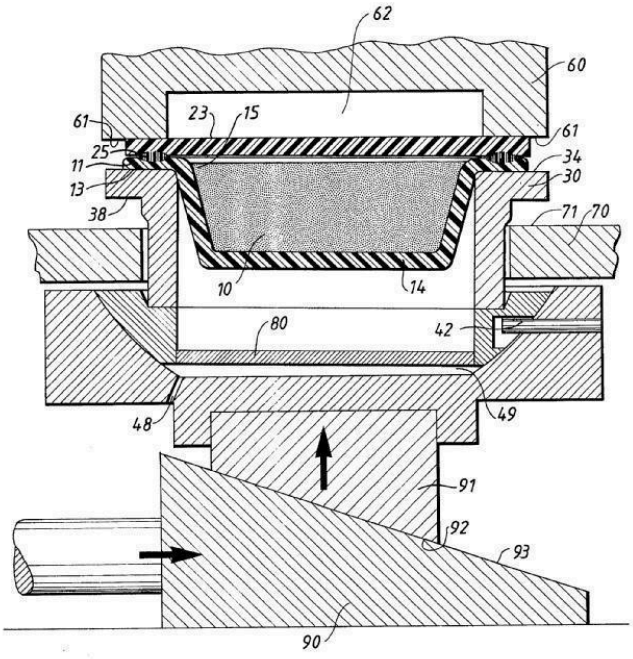

Example 2, from

DE102008004880:

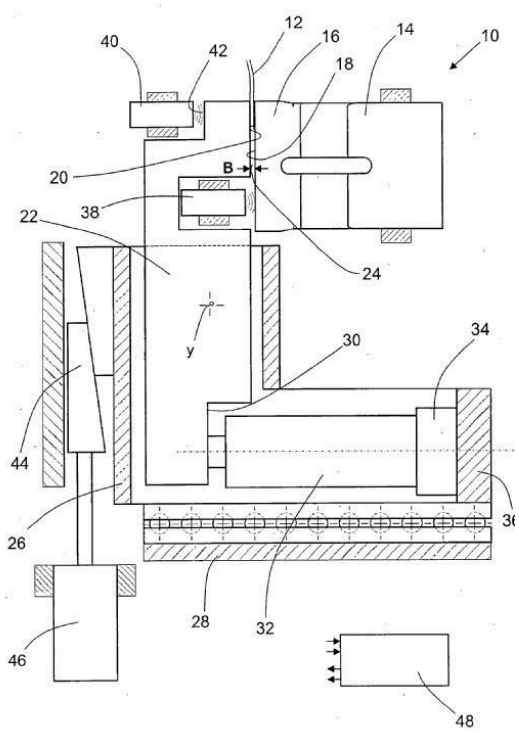

B29C 66/82263

{Follower pin or roller cooperating with a groove}

Definition statement

This place covers:

Example 1, from

EP0368095:

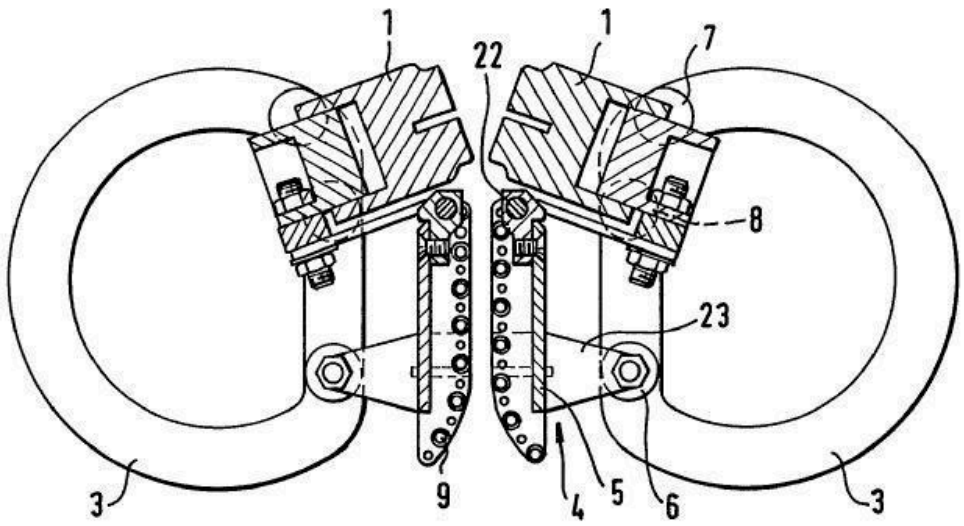

FIG. 4

B29C 66/82265

{Eccentric mechanisms}

Definition statement

This place covers:

Example 1, from

FR2338858:

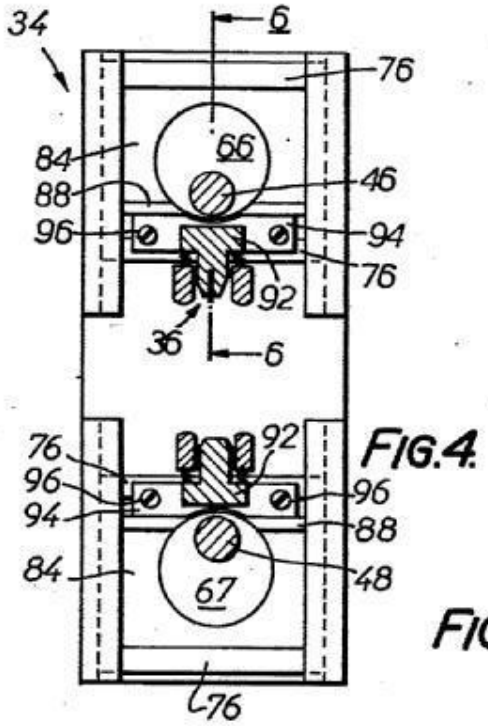

FIG.4.

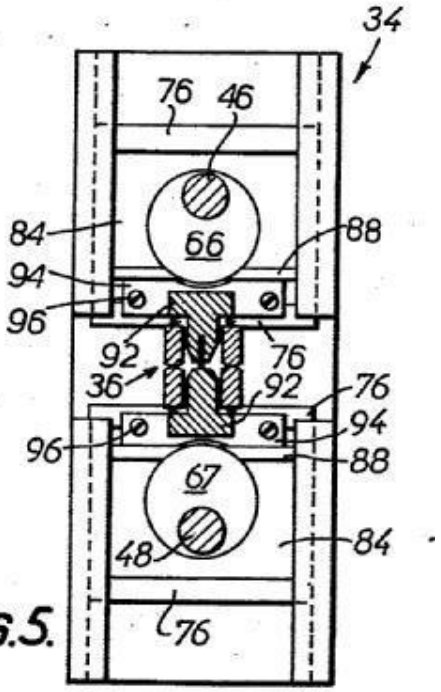

FIG.5.

B29C 66/8227

{using springs}

Definition statement

This place covers:

Example 1, from

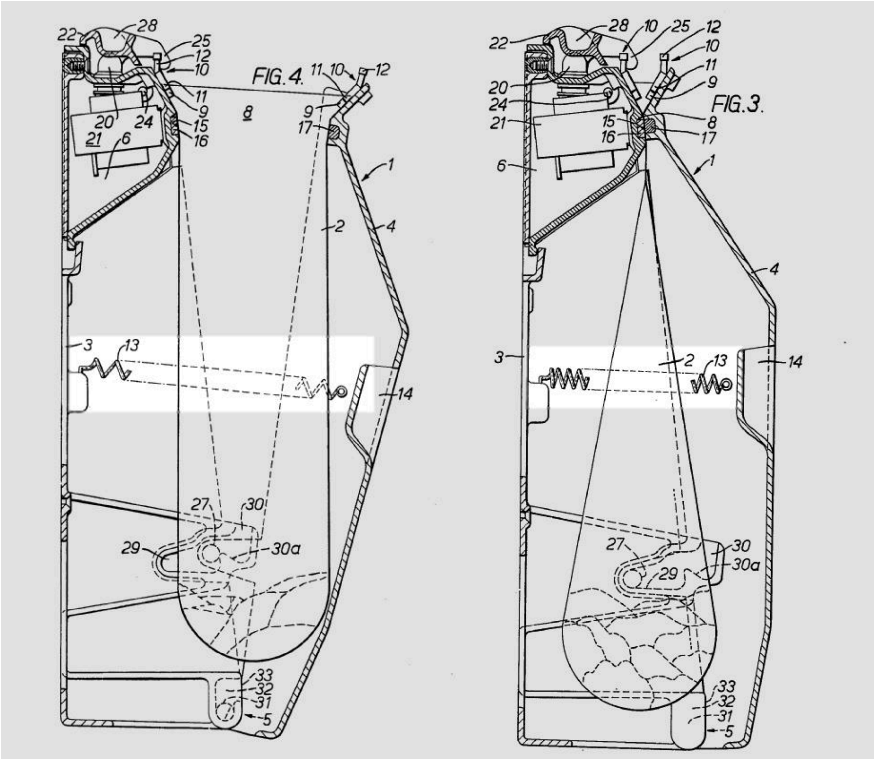

B29C 66/8242

{Pneumatic or hydraulic drives (using fluid pressure directly acting on the parts to be joined B29C 66/8266)}

Definition statement

This place covers:

Example 1, from

DE29917831U:

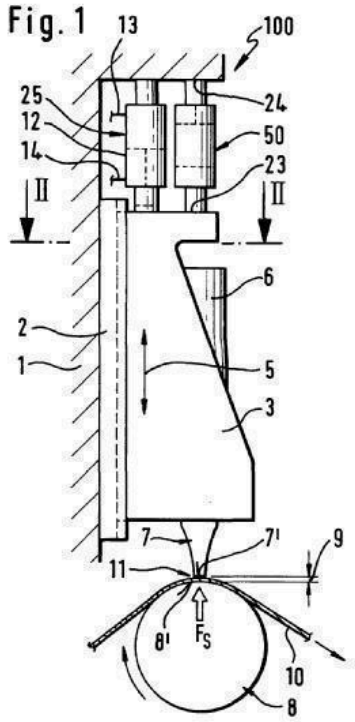

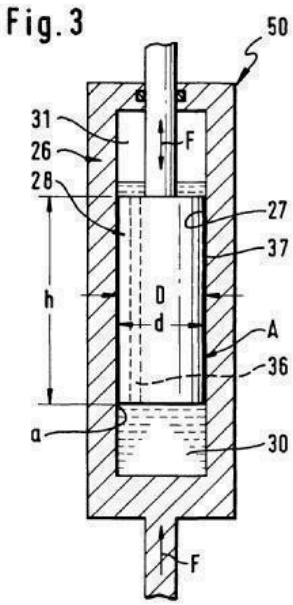

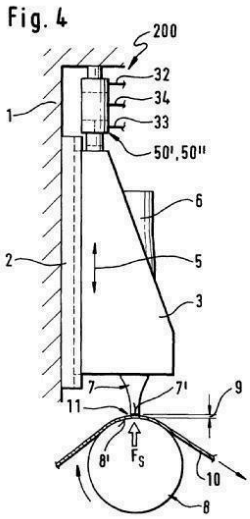

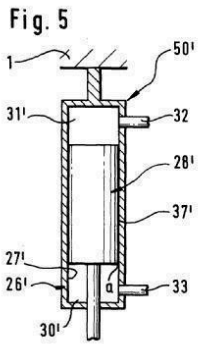

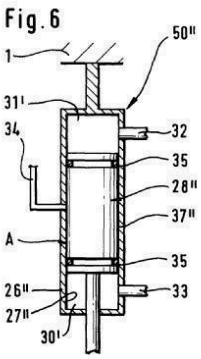

Example 2, from

DE10024036:

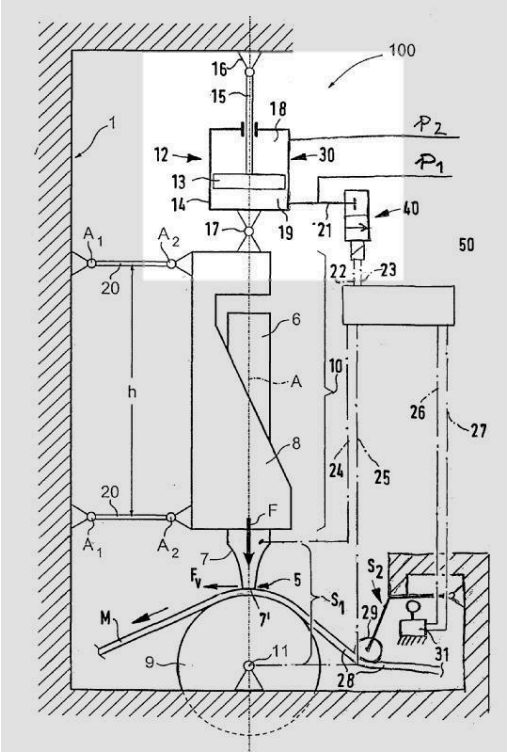
100
16
15
18
1
12
30
P2
P1
13
14
40
17
19
21
50
A1
A2
20
22
23
6
10
A
h
26
27
8
24
25
20
F
A1
A2
7
Fv
5
S2
S1
29
M
7'
9
11
31
28

B29C 66/82421

{using an inflatable element positioned between the joining tool and a backing-up part}

Definition statement

This place covers:

Example 1, from

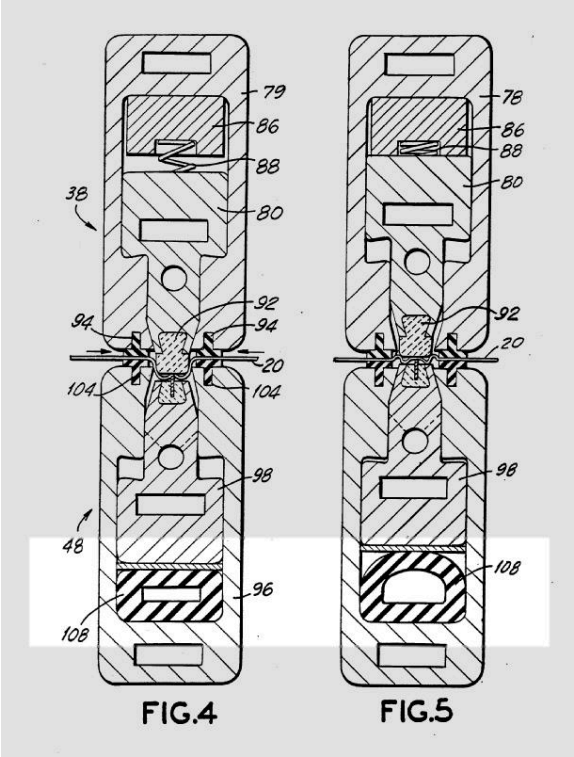

WO9208613

References

Informative references

Attention is drawn to the following places, which may be of interest for search:

Presses characterised by an elastic bag or diaphragm expanded by fluid pressure	B30B 1/003
Presses using a fluid connecting unit between drive shaft and press ram	B30B 1/265

B29C 66/8248

{Pressure application by weights (by the own weight of the joining tool B29C 66/8282)}

Definition statement

This place covers:

Example 1, from

US4247273:

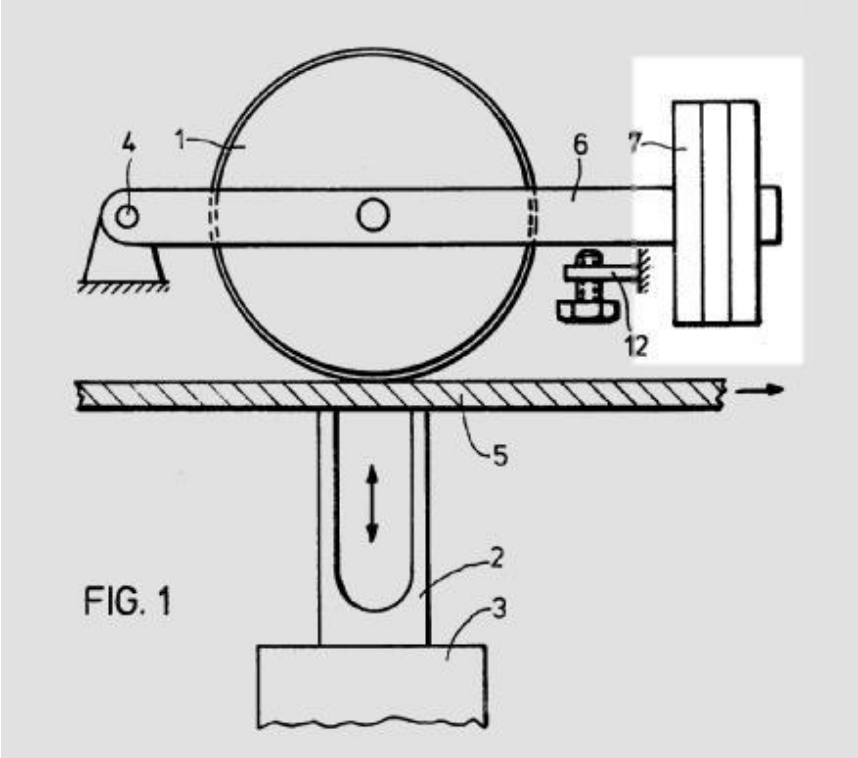

FIG. 1

B29C 66/8262

{using "pressure means" which are associated with at least one of the parts to be joined and remain in or on it}

Definition statement

This place covers:

Example 1, from

EP2159037:

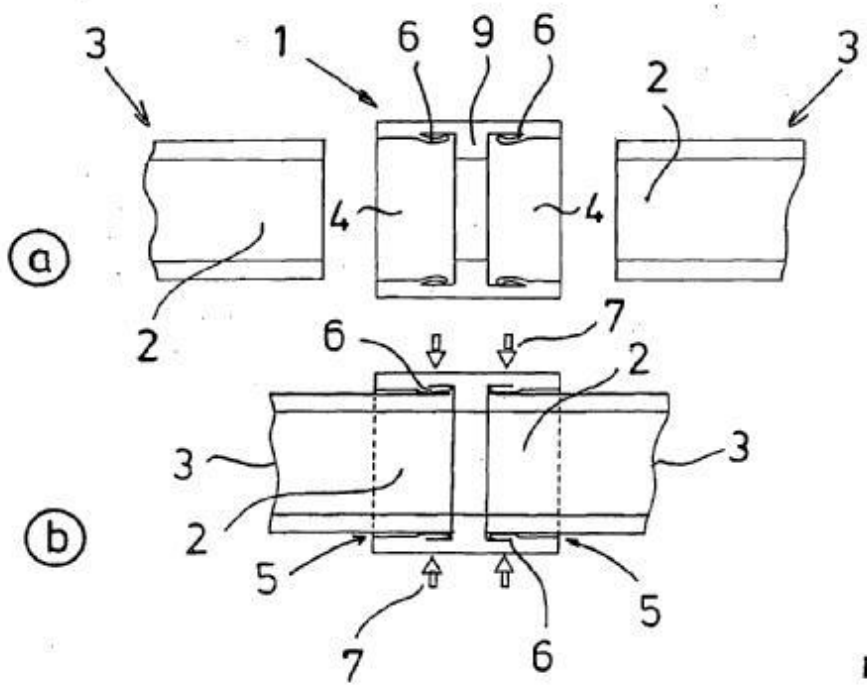

Fig. 2

B29C 66/8264

{using the thermal expansion of the parts to be joined}

Definition statement

This place covers:

Example 1, from

FR2535337:

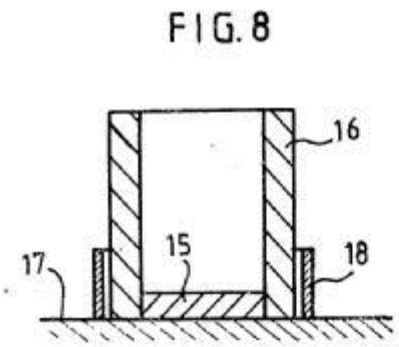

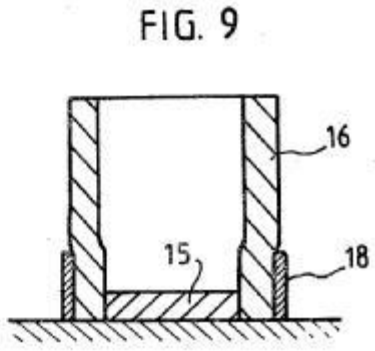

B29C 66/8266

{using fluid pressure directly acting on the parts to be joined}

Definition statement

This place covers:

Example 1, from

DE19715779:

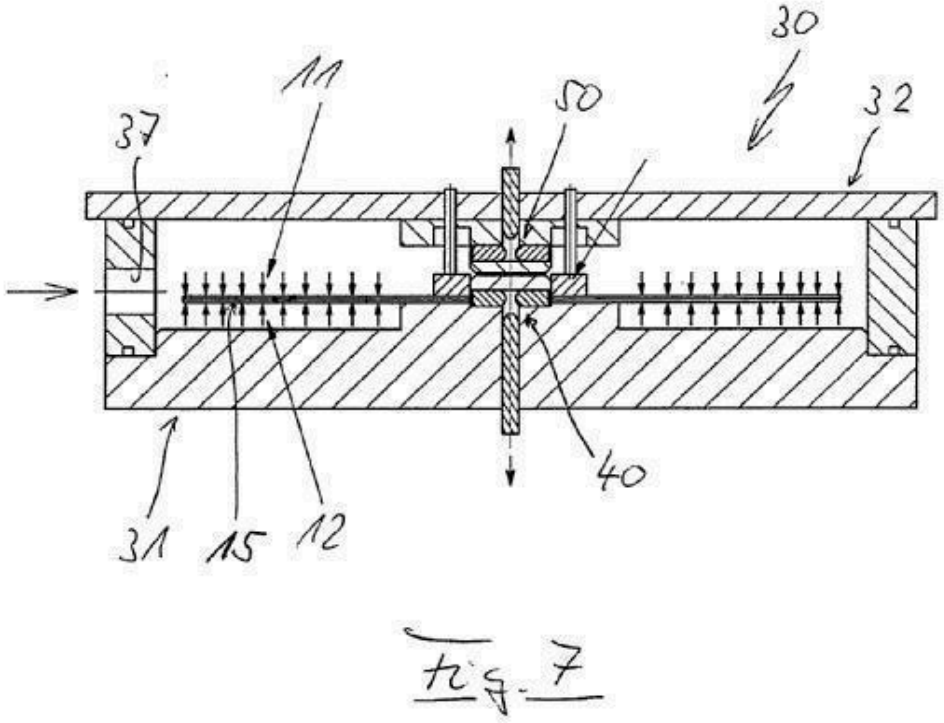

Fig. 7

Example 2, from

EP1167021:

FIG.9

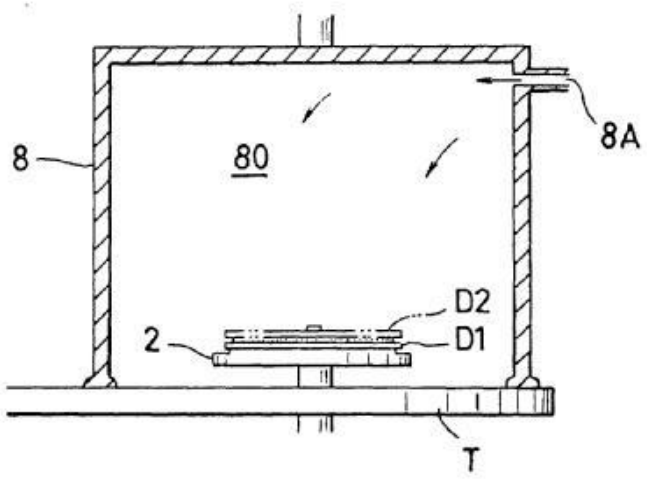

B29C 66/82661

{by means of vacuum}

Definition statement

This place covers:

Example 1, from

DE19715779:

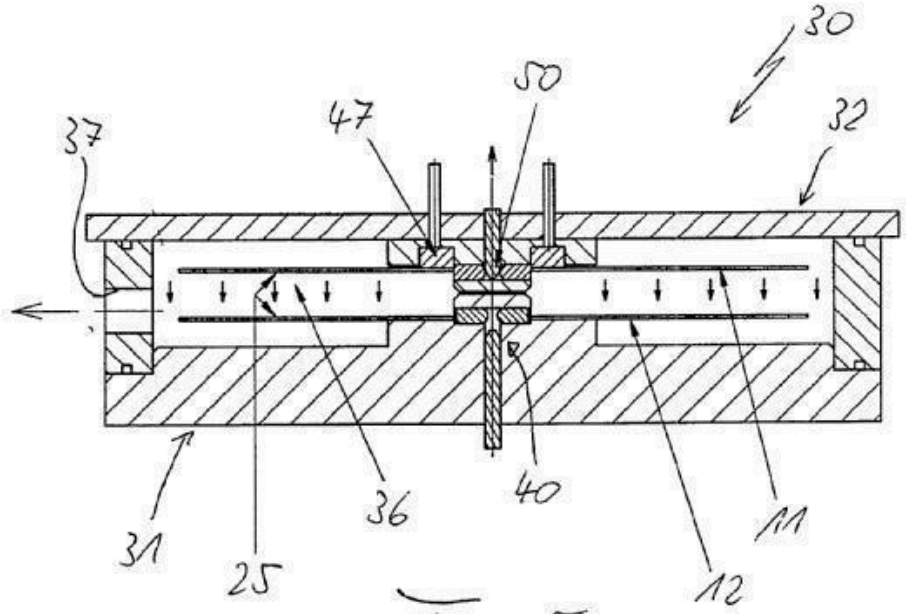

Fig. 5

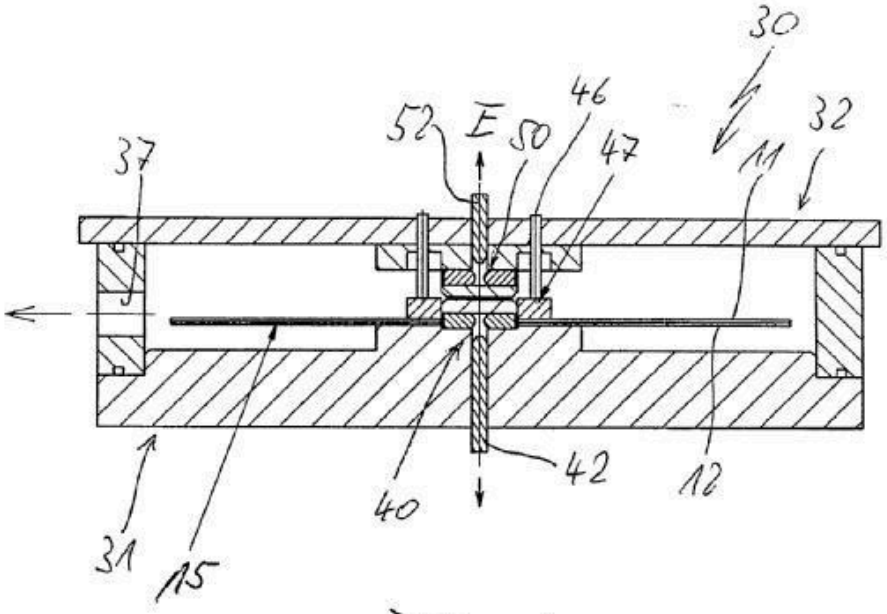

Fig. 6

B29C 66/832

{Reciprocating joining or pressing tools (B29C 66/834 takes precedence)}

References

Informative references

Attention is drawn to the following places, which may be of interest for search:

Applying or generating heat by reciprocating members for sealing package folds or closures	B65B 51/14
Device specially adapted for producing transverse or longitudinal seams in webs or tubes, by applying pressure and heat, reciprocating along only one axis	B65B 51/303

B29C 66/83221

{cooperating reciprocating tools, each tool reciprocating along one axis}

Definition statement

This place covers:

Example 1, from

WO2008146160:

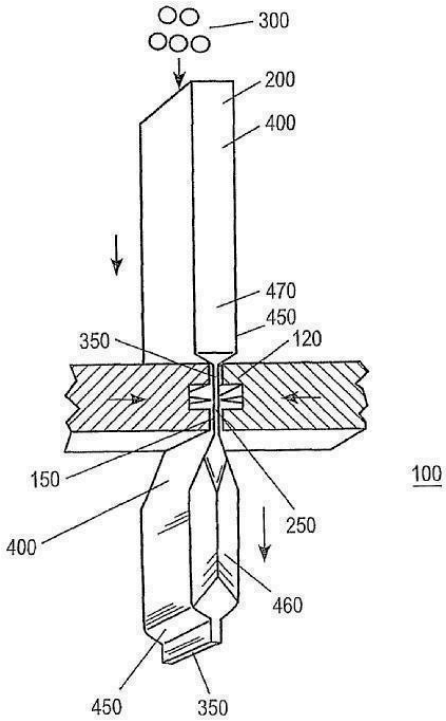

Example 2, from

WO03080447:

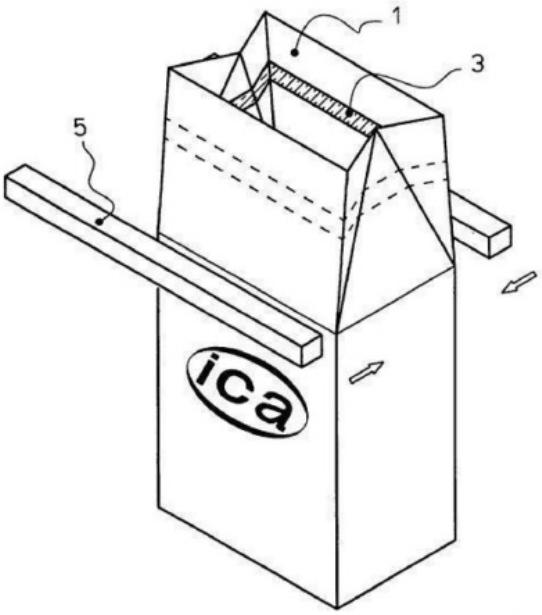

FIG. 5

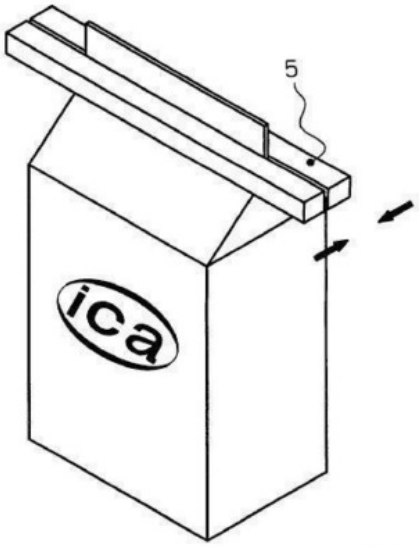

FIG. 6

B29C 66/8324

{Joining or pressing tools pivoting around one axis (scissor or lever transmission mechanisms B29C 66/8221; tools self-aligning to the joining plane B29C 66/8163)}

Definition statement

This place covers:

Example 1, from

FR2198872:

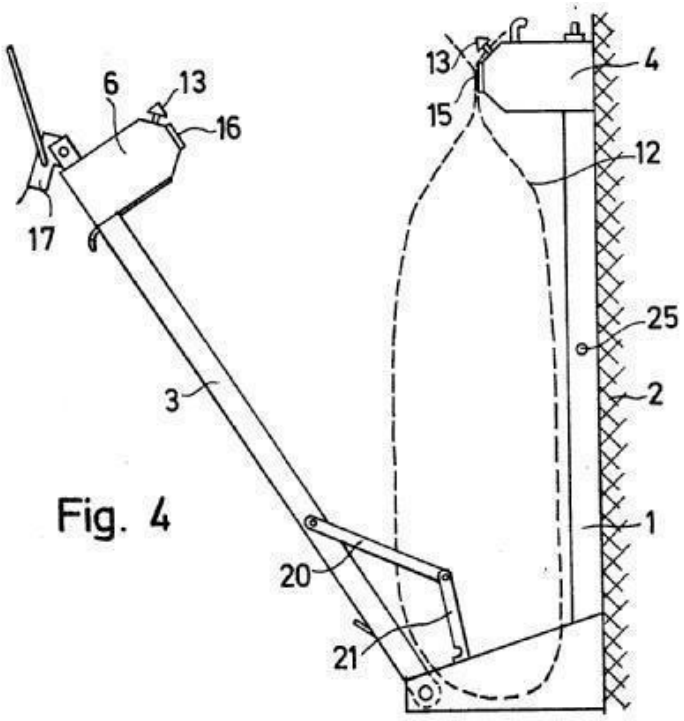

Fig. 4

B29C 66/83241

{cooperating pivoting tools}

Definition statement

This place covers:

Example 1, from

FR1015971:

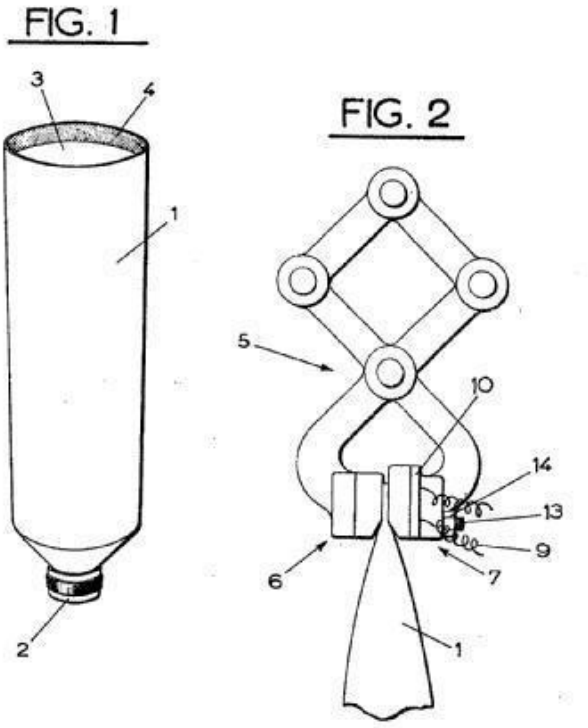

Example 2, from

FR2732264:

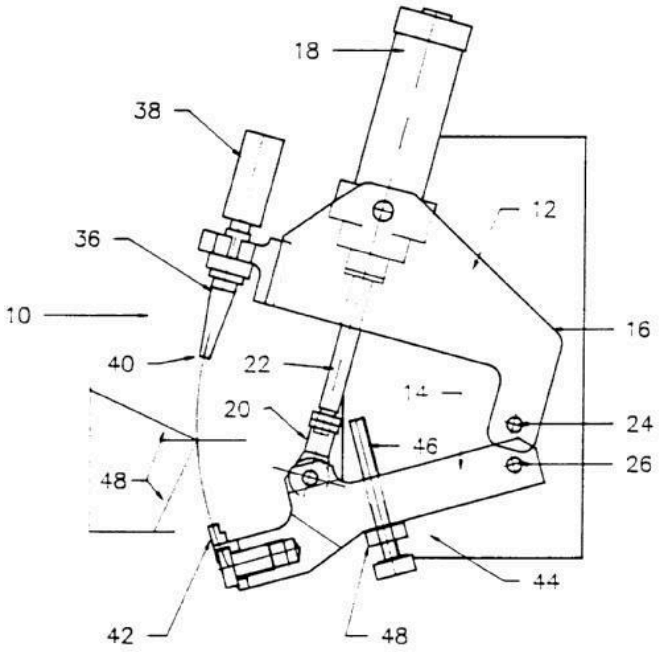

B29C 66/834

{moving with the parts to be joined}

Definition statement

This place covers:

Example 1, B29C 66/83411 (roller, cylinder or drum types) and B29C 66/83511 (jaws mounted on rollers, cylinders or drums), from

US6454890:

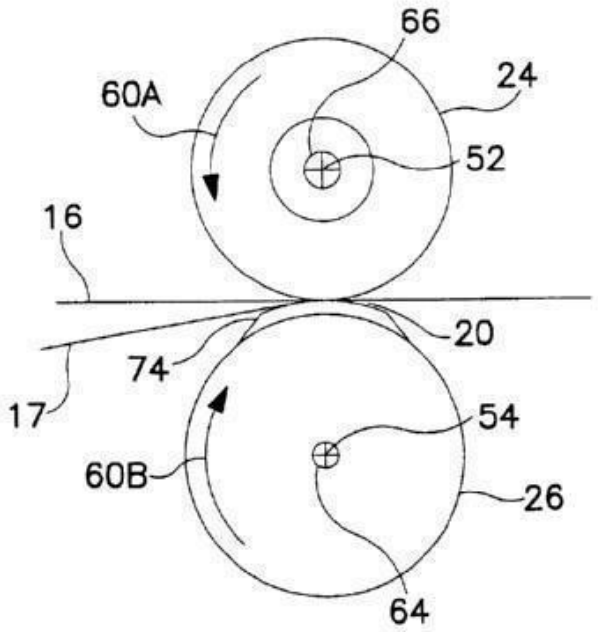

FIG. 5B

Example 2, B29C 66/83541 (flying jaws) and B29C 66/83421 (band or belt types), from

US3692608:

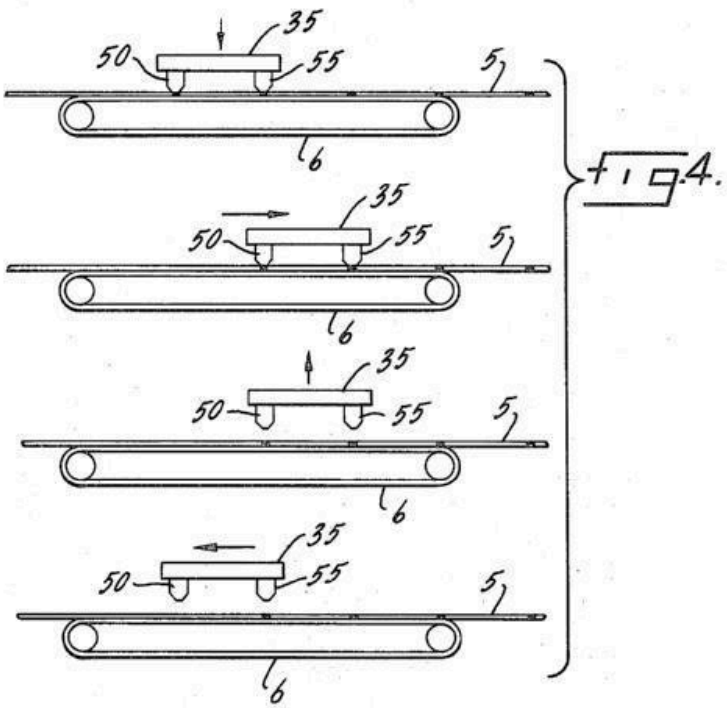

References

Informative references

Attention is drawn to the following places, which may be of interest for search:

Ultrasonic welding of metals using a roller	B23K 20/103
Applying or generating heat by rotary members for sealing package folds or closures	B65B 51/16
Applying or generating heat by endless bands or chains for sealing package folds or closures	B65B 51/18
Rollers for producing longitudinal and transverse seams simultaneously in package webs or tubes	B65B 51/28
Counter-rotating devices for producing transverse or longitudinal seams in package webs or tubes by applying pressure and heat	B65B 51/306
Heated rollers for induction heating	H05B 6/145

B29C 66/83413

{cooperating rollers, cylinders or drums}

Definition statement

This place covers:

Example 1, from

DE2259203:

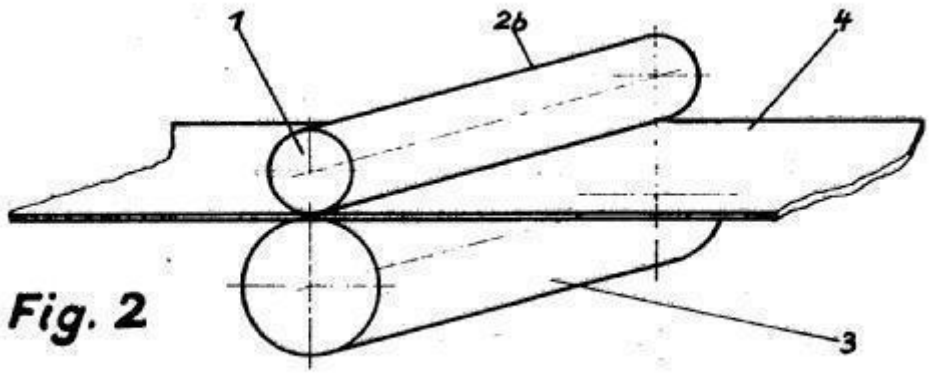

Fig. 2

Example 2, from

JP2006027671:

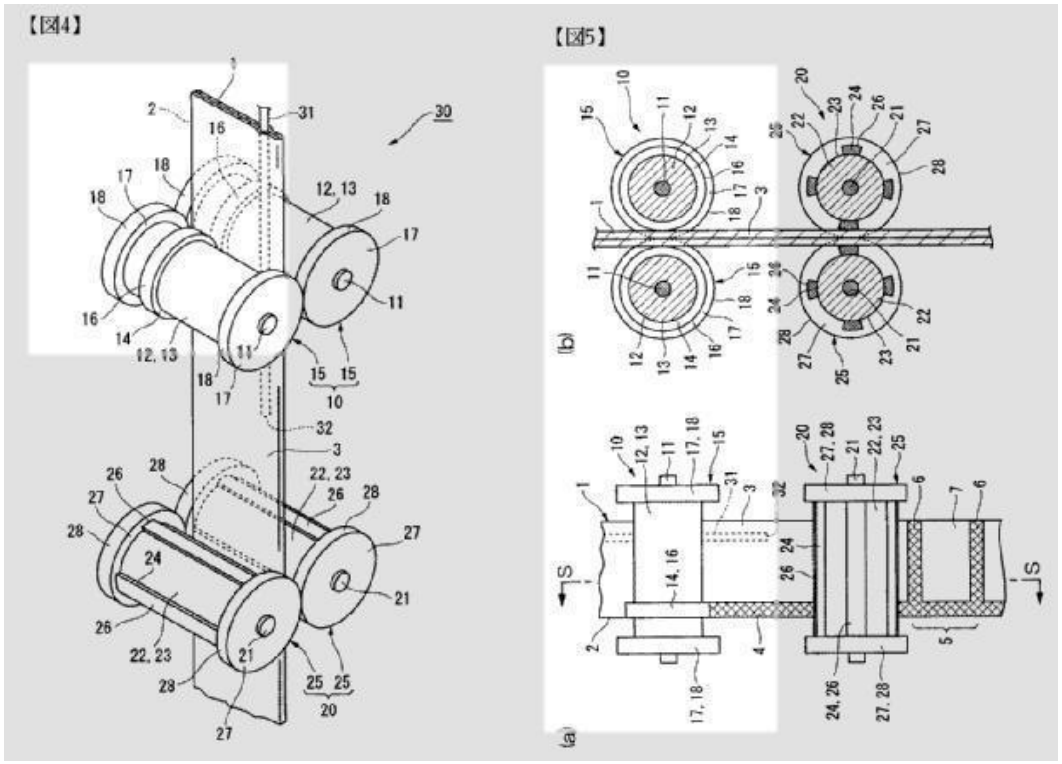

Example 3, from

US6454890:

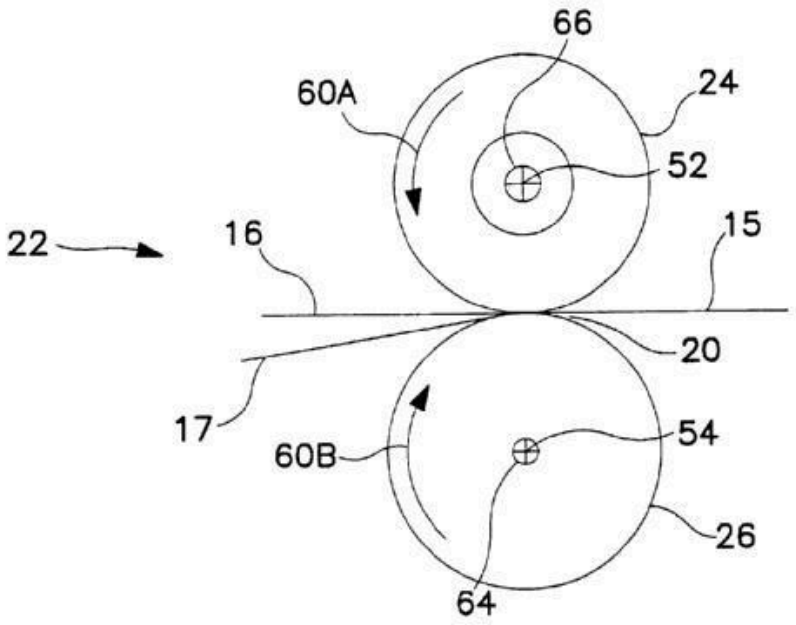

FIG. 5A

B29C 66/83415

{the contact angle between said rollers, cylinders or drums and said parts to be joined being a non-zero angle (B29C 66/83433 takes precedence)}

Definition statement

This place covers:

Example 1, from

US2003010439:

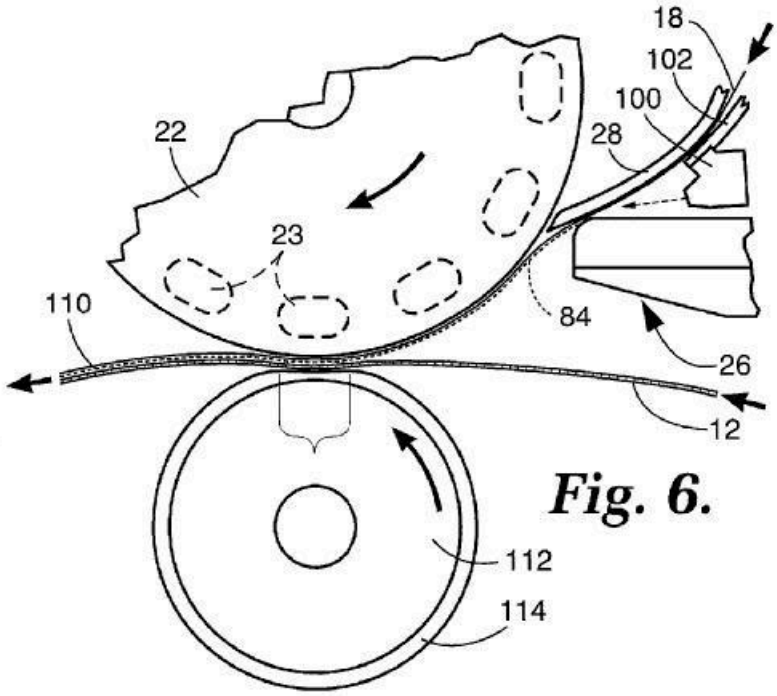

Fig. 6.

B29C 66/83417

{said rollers, cylinders or drums being hollow}

Definition statement

This place covers:

Example 1, from

US3059690:

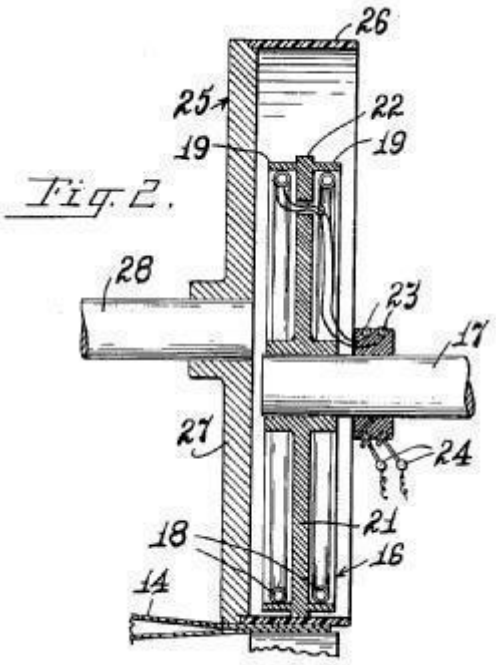

B29C 66/83421

{band or belt types (B29C 66/83431 takes precedence)}

References

Informative references

Attention is drawn to the following places, which may be of interest for search:

Devices for, or methods of, sealing or securing package folds or closures, by applying or generating heat by endless bands	B65B 51/18

B29C 66/83423

{cooperating bands or belts}

Definition statement

This place covers:

Example 1, from

US4411310:

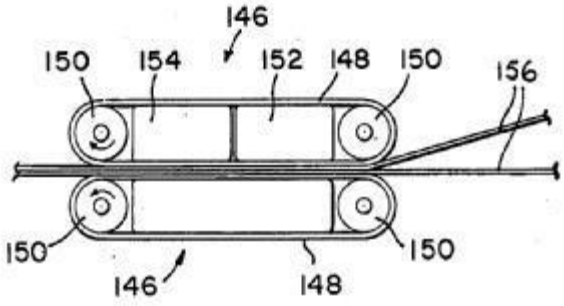

FIG. 18

B29C 66/83431

{rollers, cylinders or drums cooperating with bands or belts}

Definition statement

This place covers:

Example 1, from

WO2006087224:

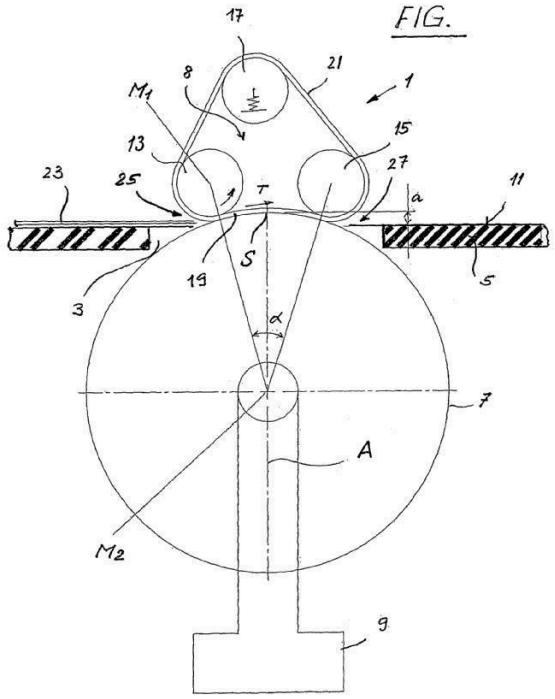

B29C 66/83433

{the contact angle between said rollers, cylinders or drums and said bands or belts being a non-zero angle}

Definition statement

This place covers:

Example 1, from

US2003010439:

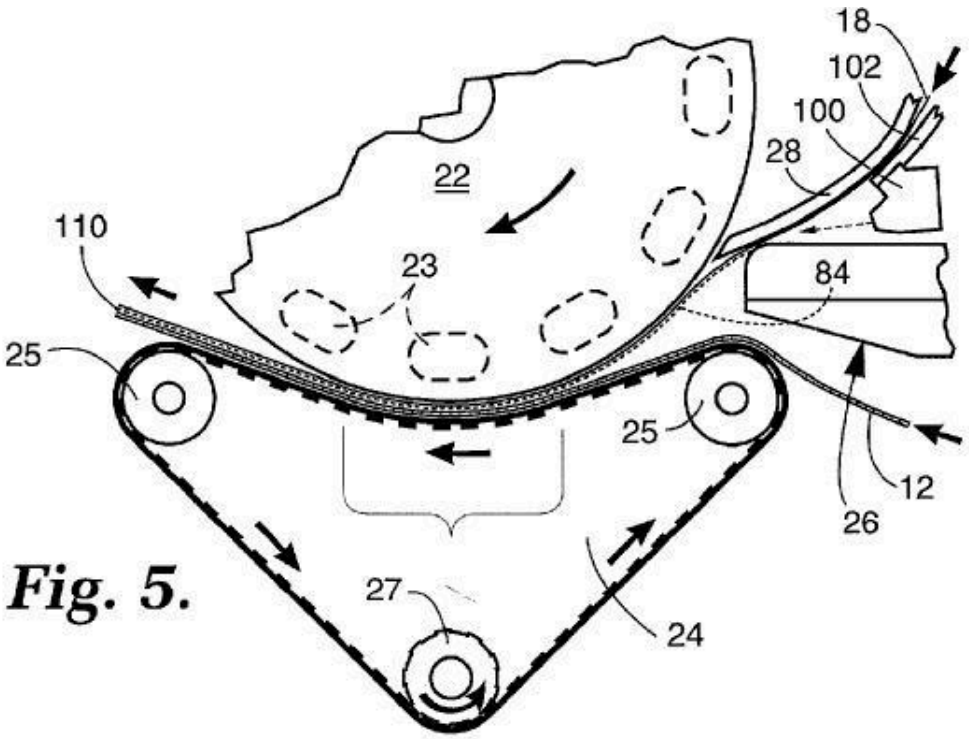

Fig. 5.

B29C 66/83435

{said rollers, cylinders or drums being hollow}

Definition statement

This place covers:

Example 2, from

LU41236:

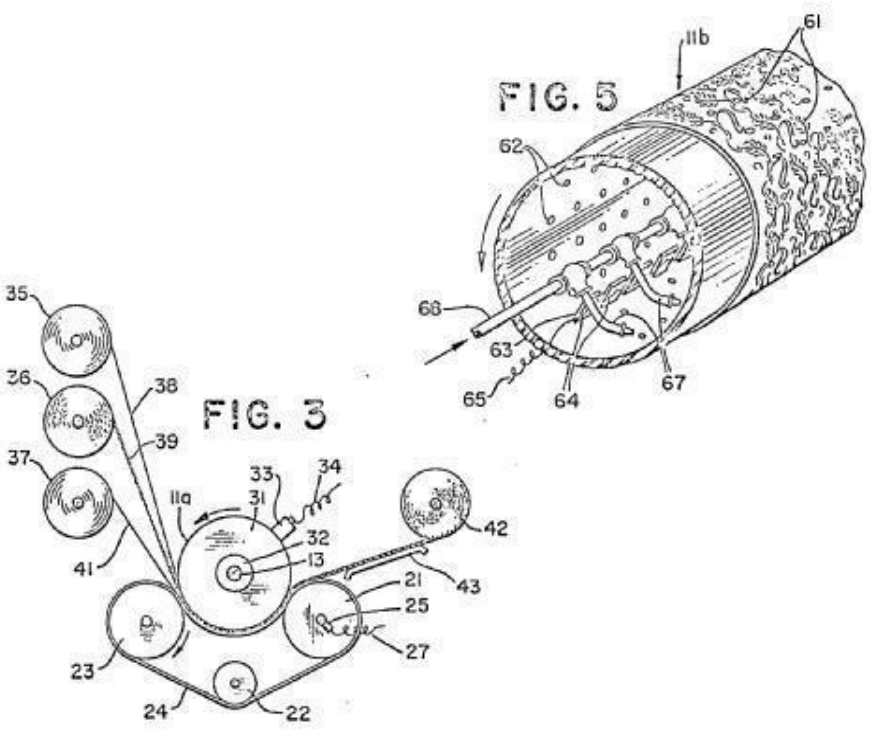

B29C 66/83441

{Ball types}

Definition statement

This place covers:

Example 1, from

FR1264171:

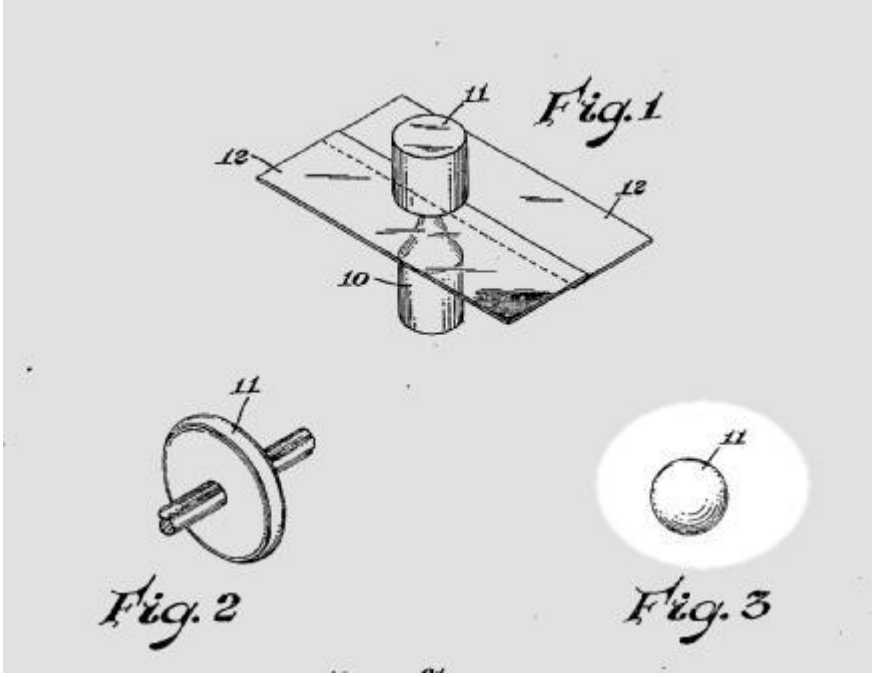

B29C 66/83511

{jaws mounted on rollers, cylinders or drums}

Definition statement

This place covers:

Example 1, from

FR2953200:

FIG. 5

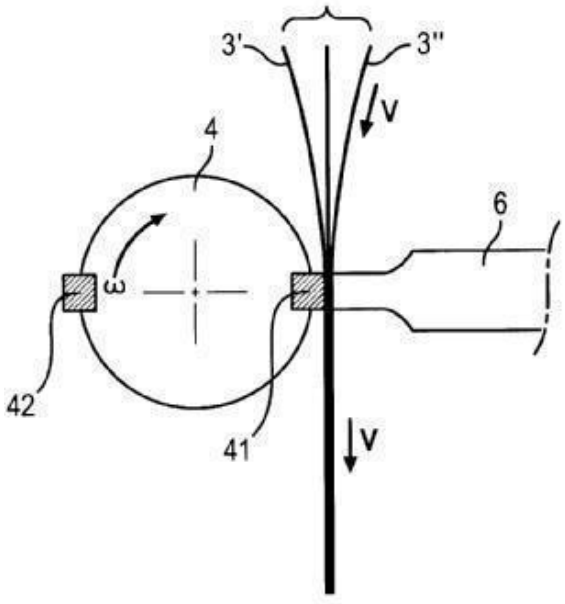

References

Informative references

Attention is drawn to the following places, which may be of interest for search:

Rollers for producing longitudinal and transverse seams simultaneously in package webs or tubes	B65B 51/28

B29C 66/83513

{cooperating jaws mounted on rollers, cylinders or drums and moving in a closed path}

Definition statement

This place covers:

Example 1, from

JP61142105:

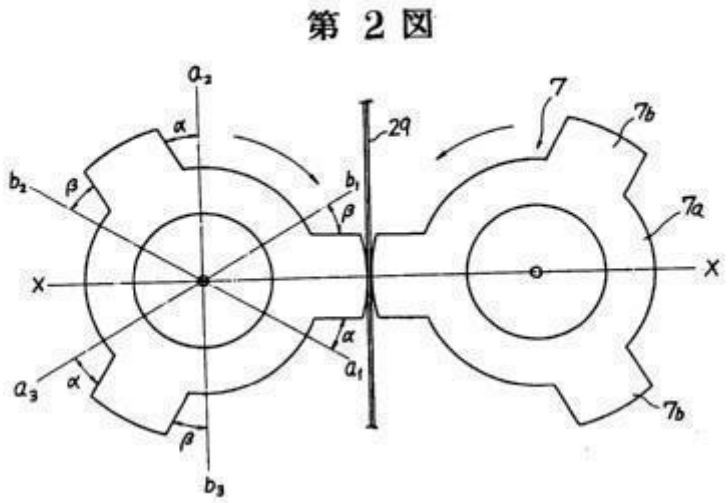

Example 2, from

JP2006027671:

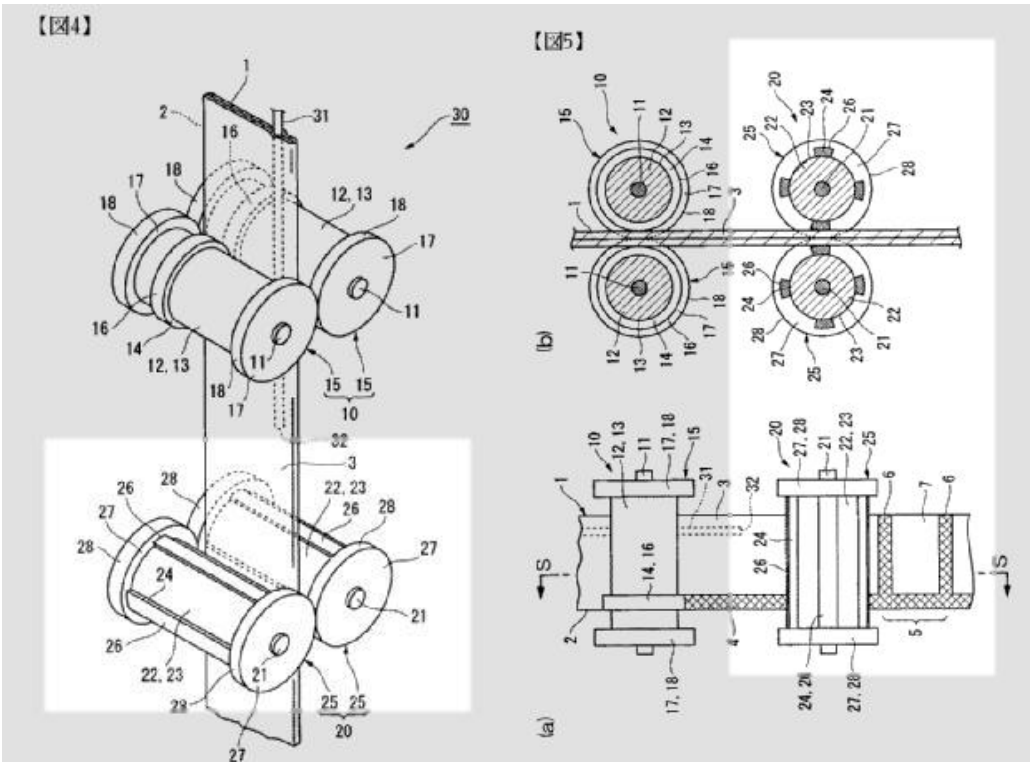

B29C 66/83521

{jaws mounted on bands or belts}

Definition statement

This place covers:

Example 1, from

WO03097341:

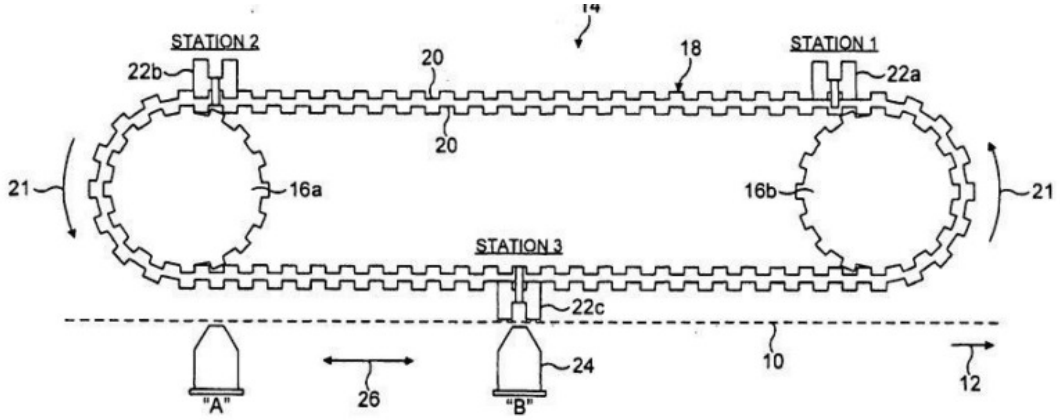

B29C 66/83523

{Cooperating jaws mounted on cooperating bands or belts and moving in a closed path}

Definition statement

This place covers:

Example 1, from

EP1442984:

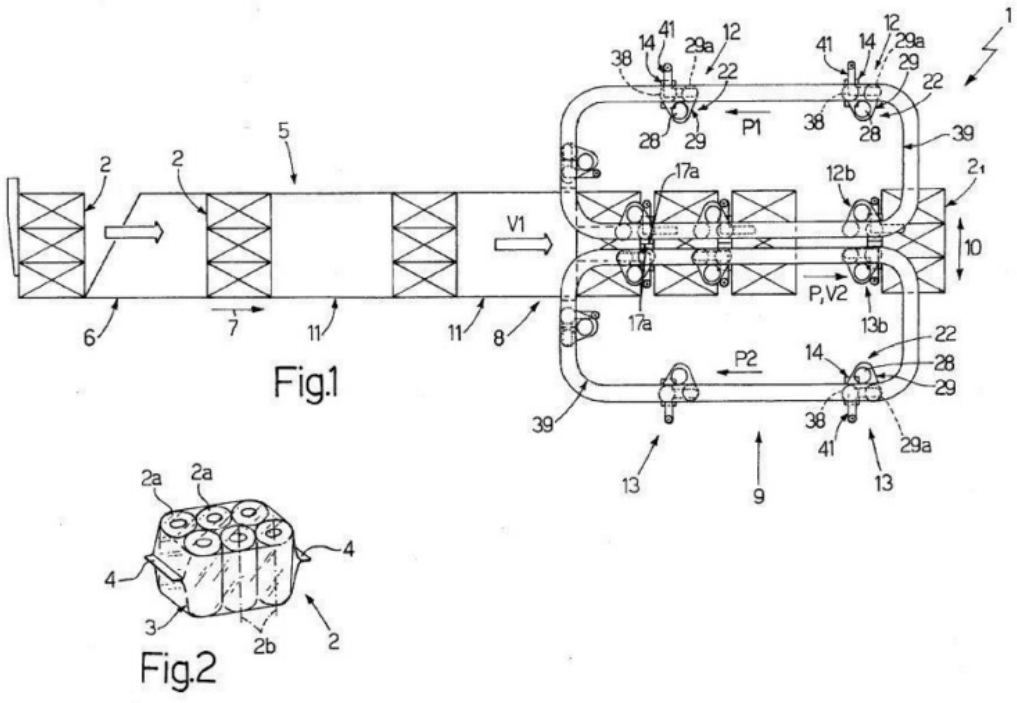

Example 2, from

WO0026010:

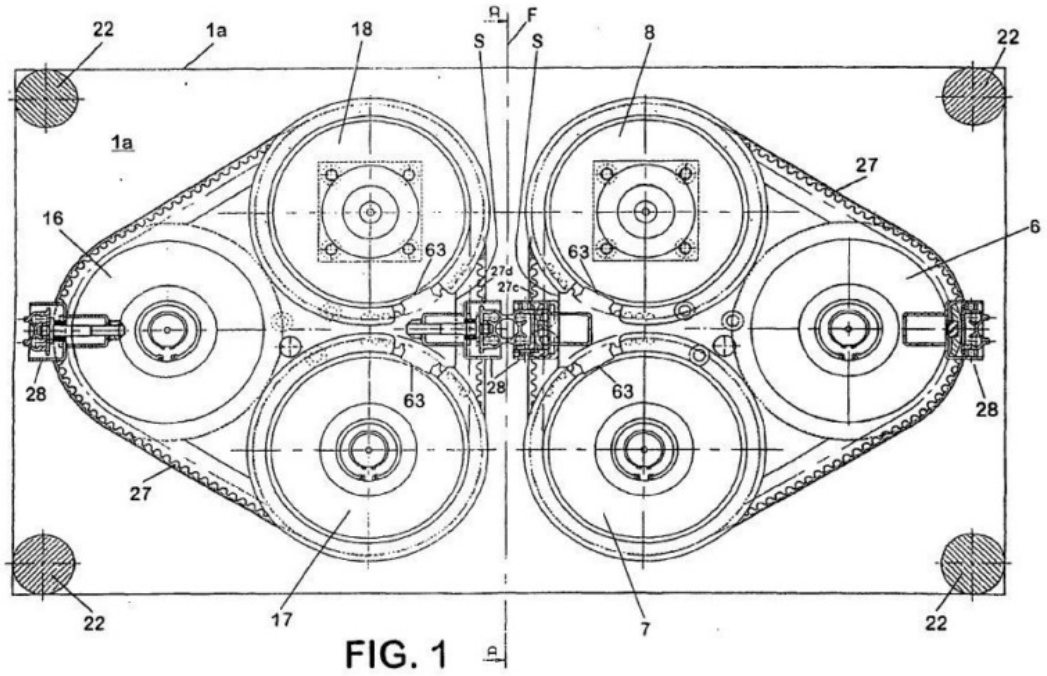

FIG. 1

B29C 66/83533

{Cooperating jaws mounted on cooperating chains and moving in a closed path}

Definition statement

This place covers:

Example 1, from

DE4314637:

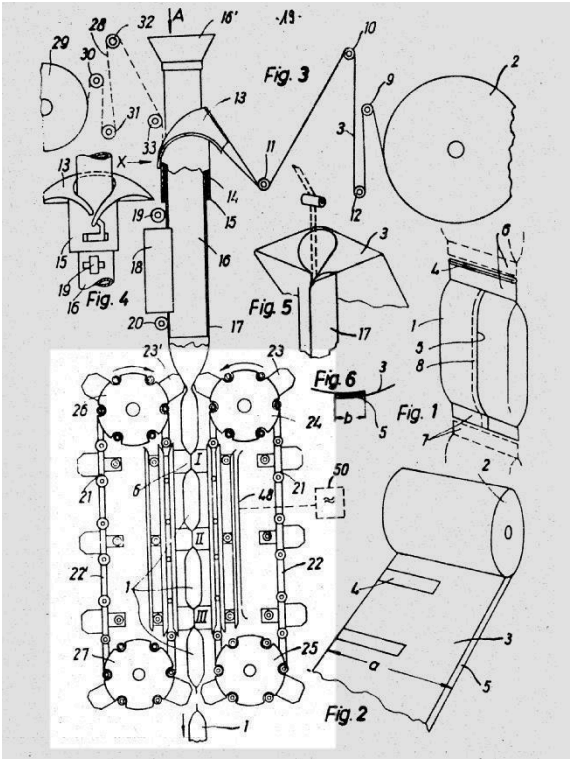

Example 2, from

EP1234772:

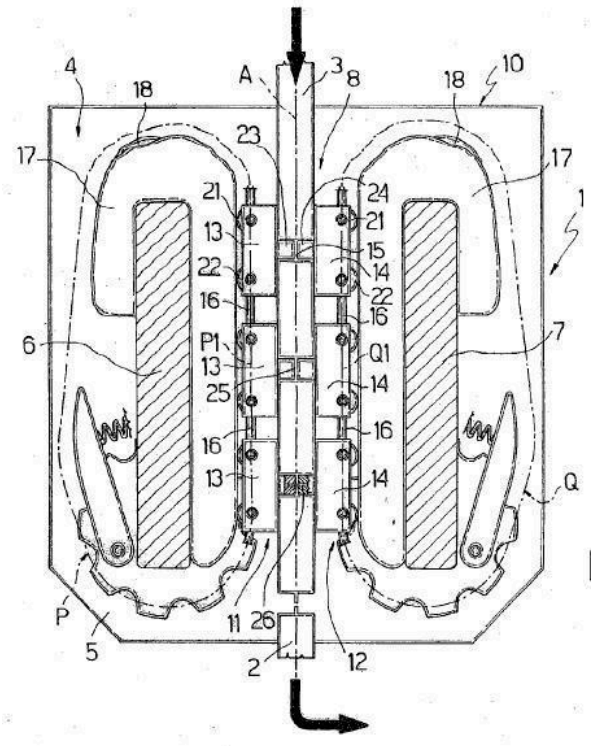

B29C 66/83543

{cooperating flying jaws}

Definition statement

This place covers:

Example 1, from

EP0915015:

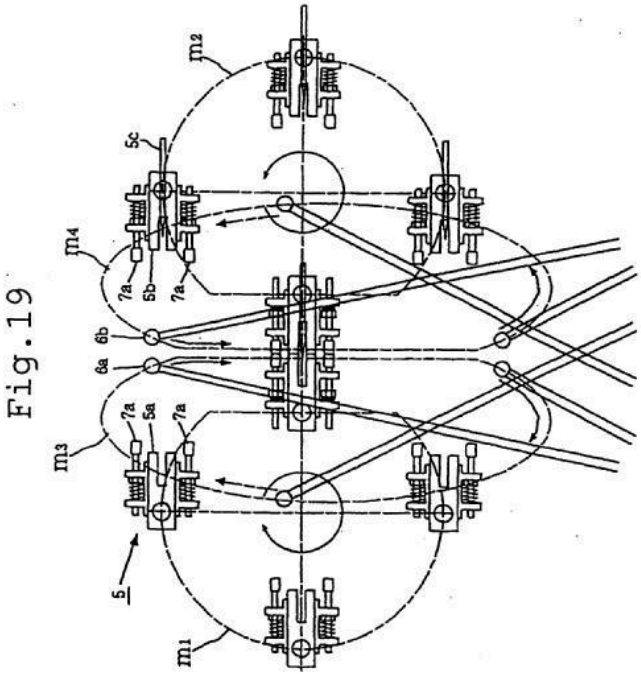

B29C 66/836

{Moving relative to and tangentially to the parts to be joined, e.g. transversely to the displacement of the parts to be joined, e.g. using a X-Y table (B29C 66/65 takes precedence)}

Definition statement

This place covers:

Example 1, from

JP58042049:

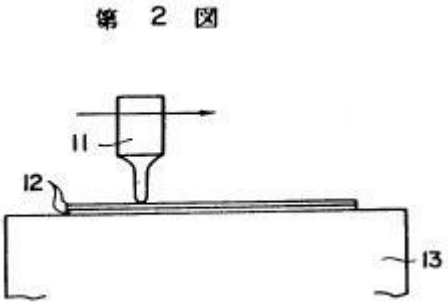

Example 2, from

WO2011065827:

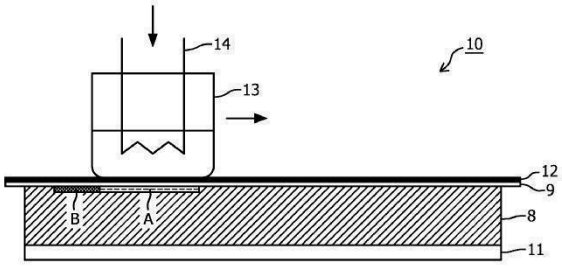

FIG. 2C

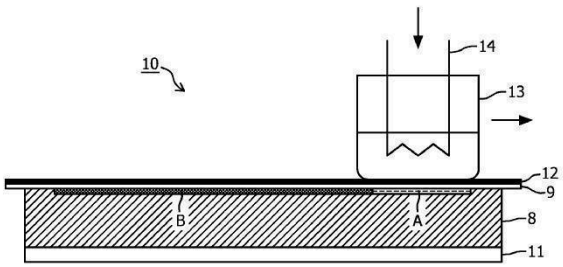

FIG. 2D

Example 3, from

JP2000272612:

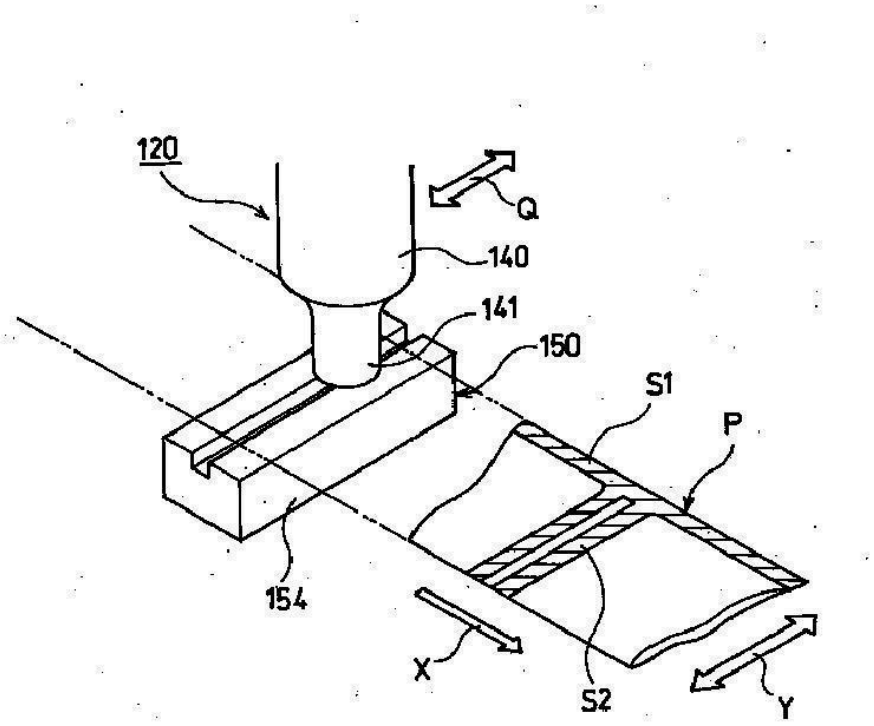

B29C 66/8362

{Rollers, cylinders or drums moving relative to and tangentially to the parts to be joined}

Definition statement

This place covers:

Example 1, from

JP58042049:

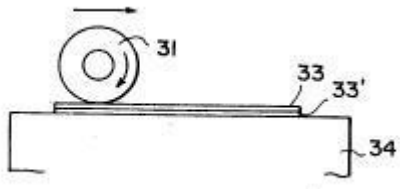

B29C 66/841

{Machines or tools adaptable for making articles of different dimensions or shapes or for making joints of different dimensions}

References

Informative references

Attention is drawn to the following places, which may be of interest for search:

Arrangements to enable machines to produce packages of different sizes	B65B 59/00

B29C 66/8414

{of different diameter}

Definition statement

This place covers:

Example 1, from

DE2654342:

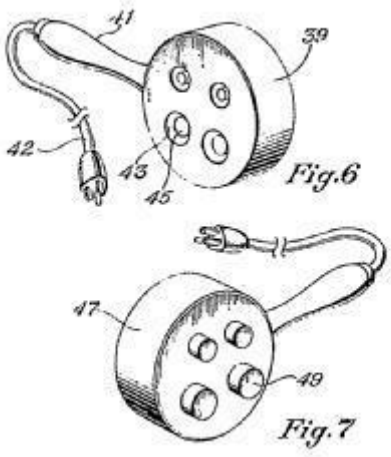

Example 2, from

NL7802257:

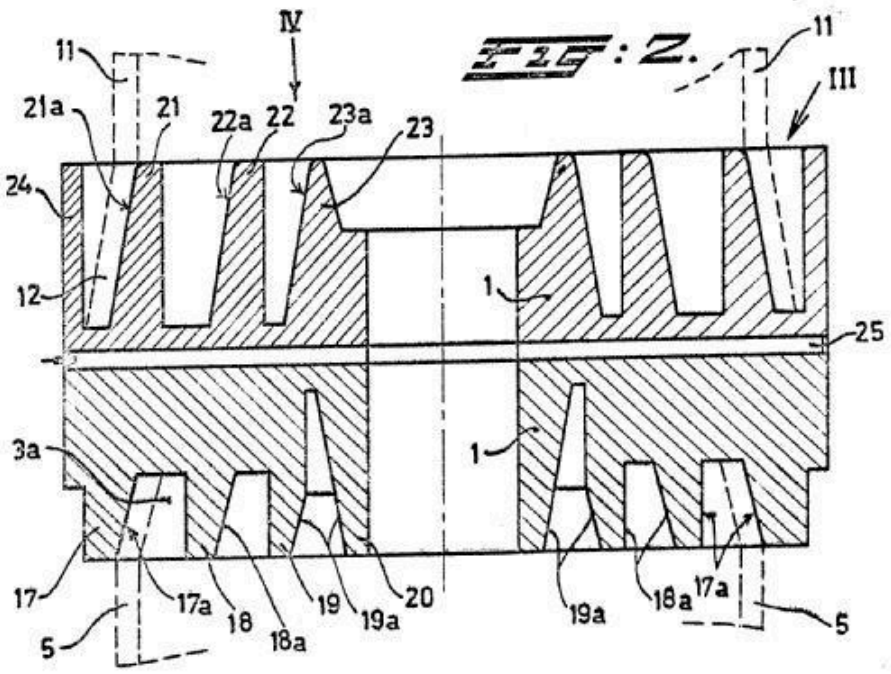

B29C 66/843

{Machines for making separate joints at the same time in different planes; Machines for making separate joints at the same time mounted in parallel or in series}

Definition statement

This place covers:

Example 1, from

DE19938100:

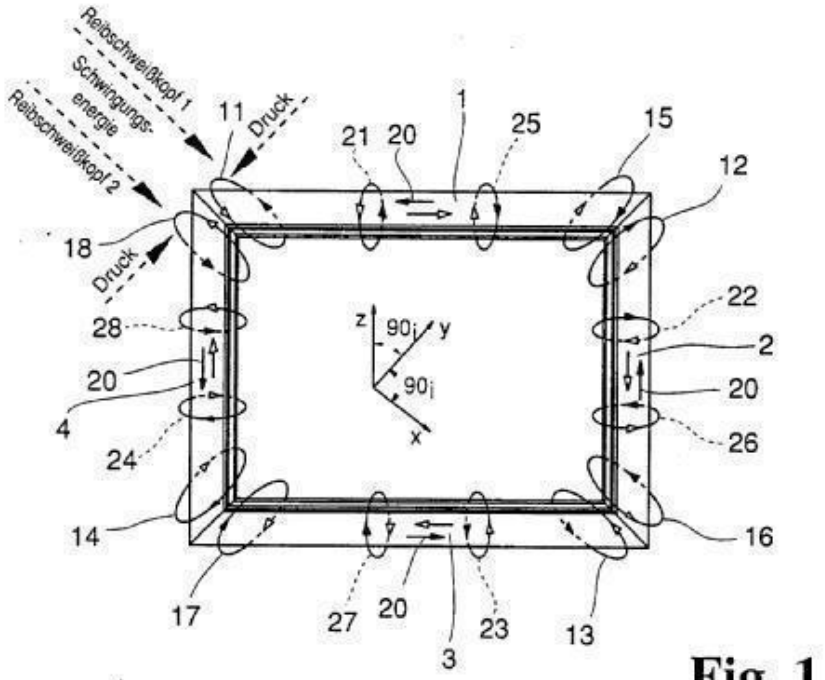

Fig. 1

Example 2, from

EP1837163:

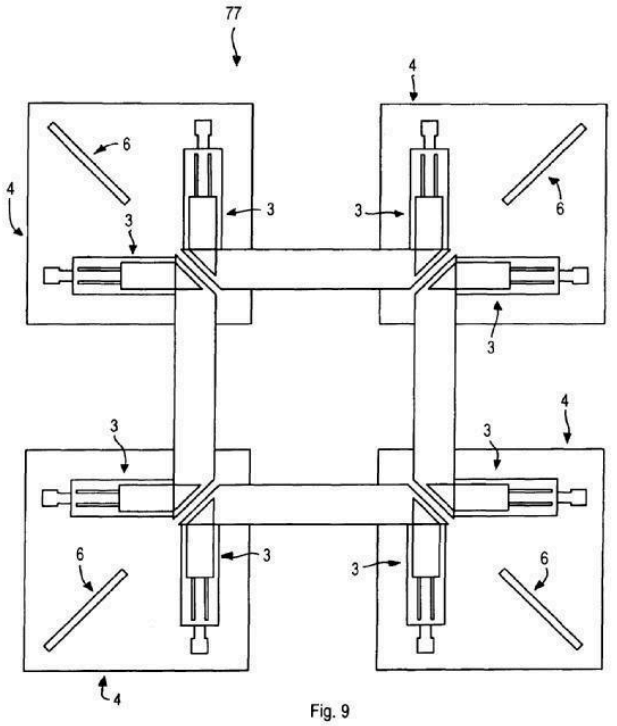

Fig. 9

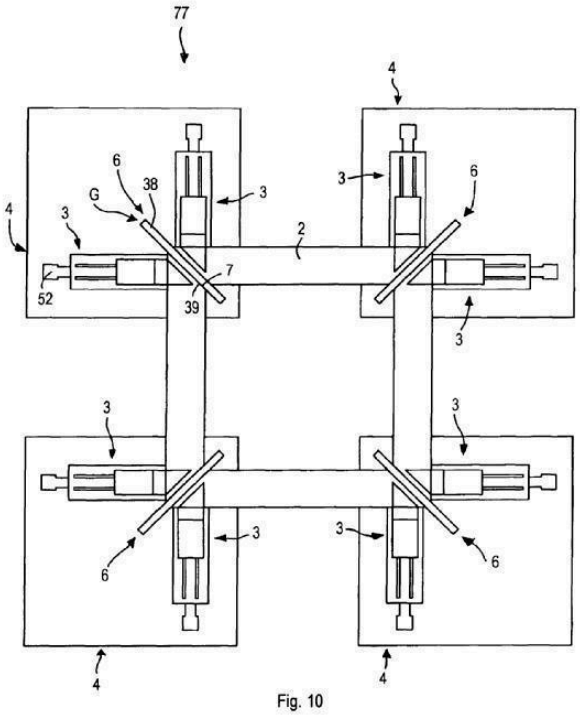

Fig. 10

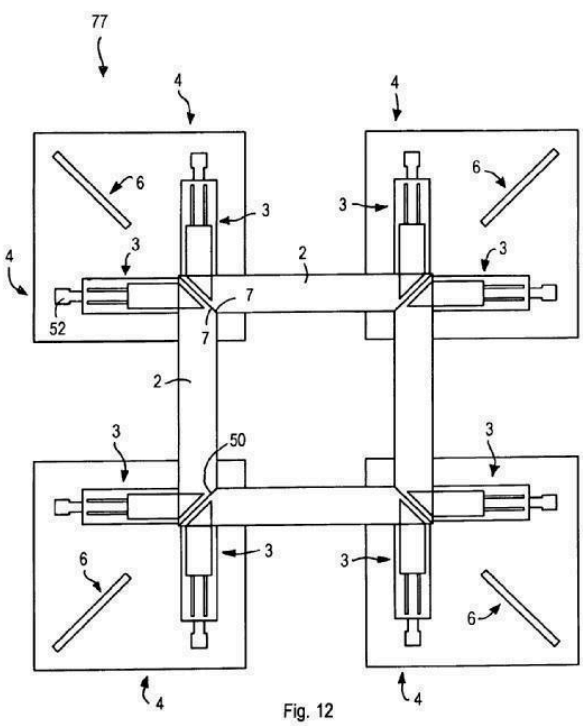

Fig. 12

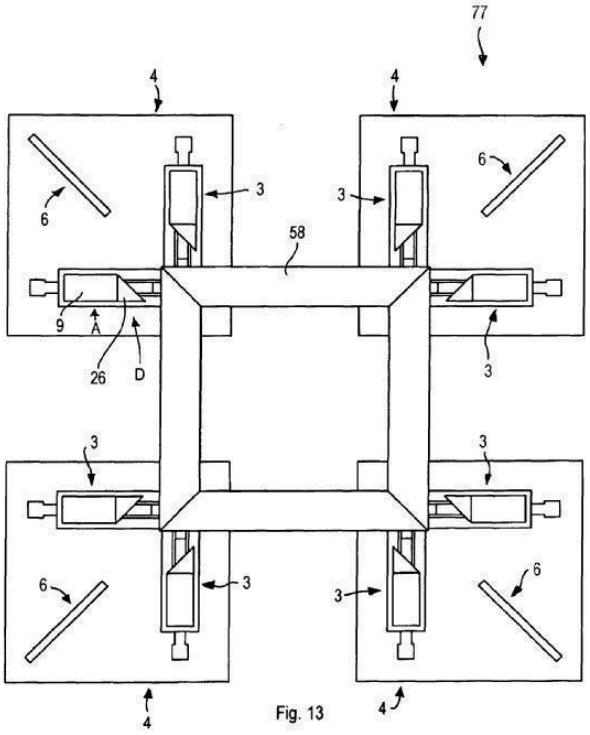

Fig. 13

B29C 66/8432

{Machines for making separate joints at the same time mounted in parallel or in series}

Definition statement

This place covers:

Example 1, from

GB1189906:

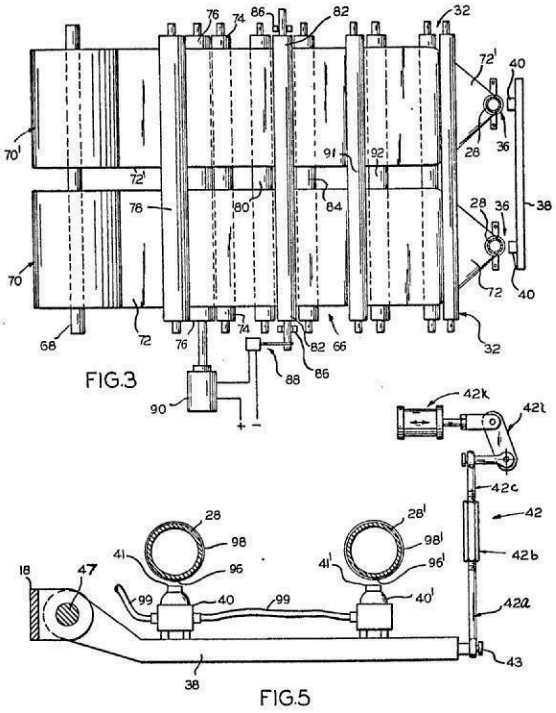

Example 2, from

US4158584:

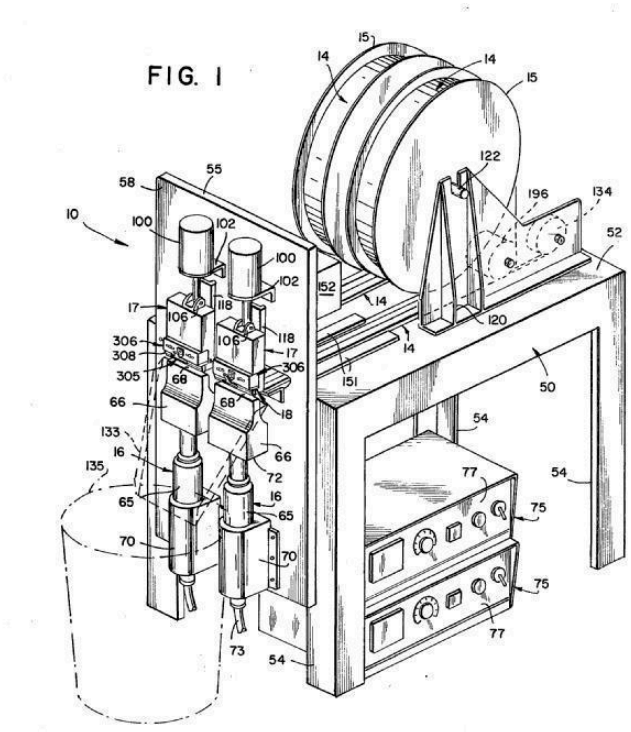

B29C 66/845

{C-clamp type or sewing machine type}

Definition statement

This place covers:

Example 1, from

US2583709:

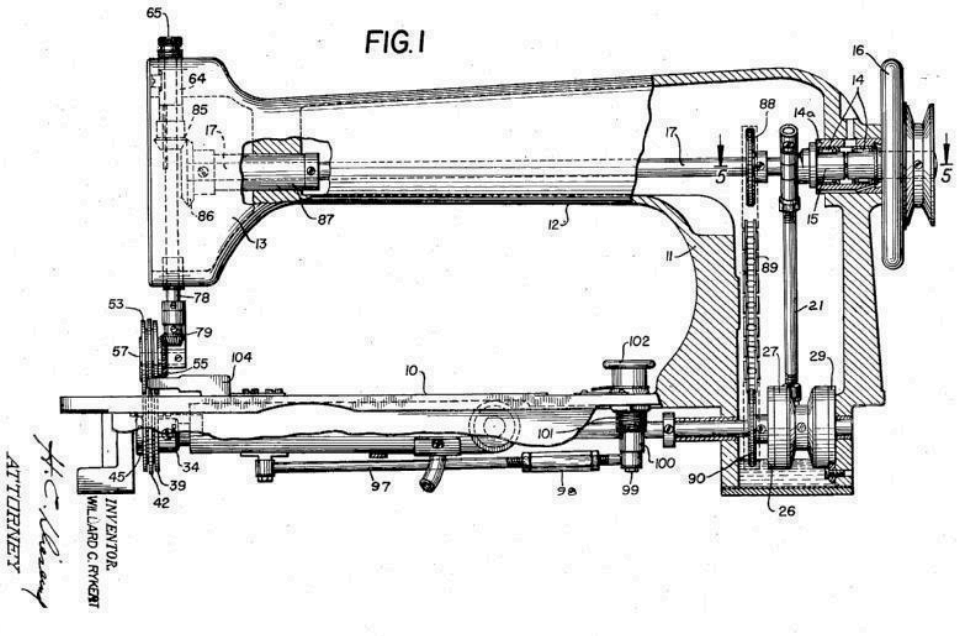

Example 2, from

JP3126529:

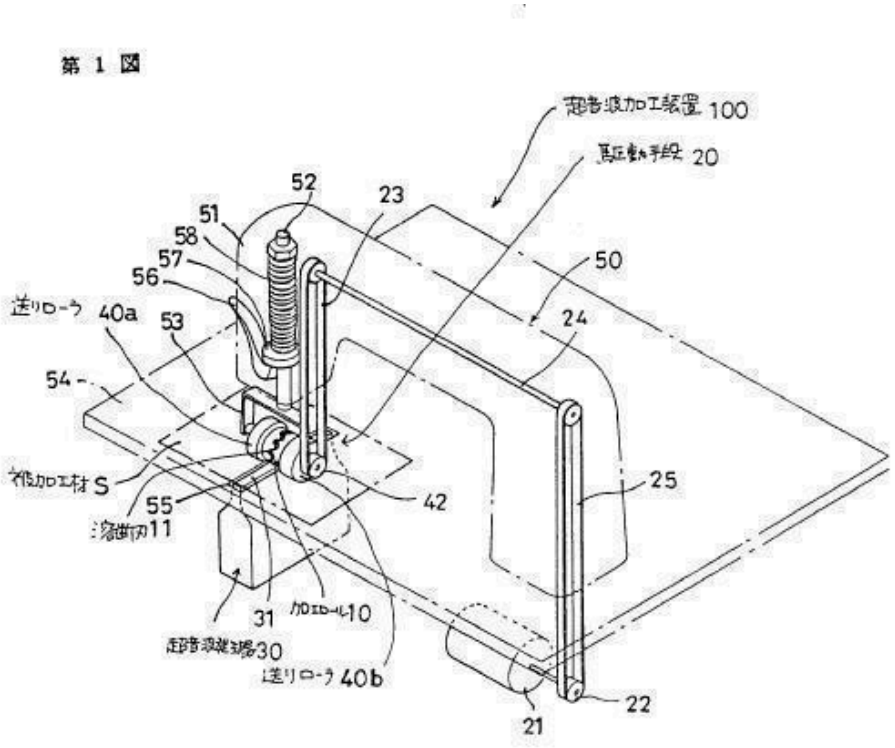

Example 3, from

GB2062538:

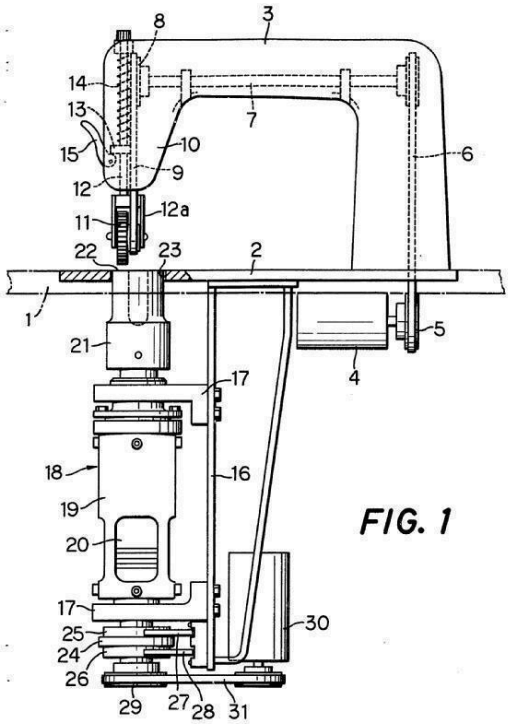

FIG. 1

Example 4, from

DE2055127:

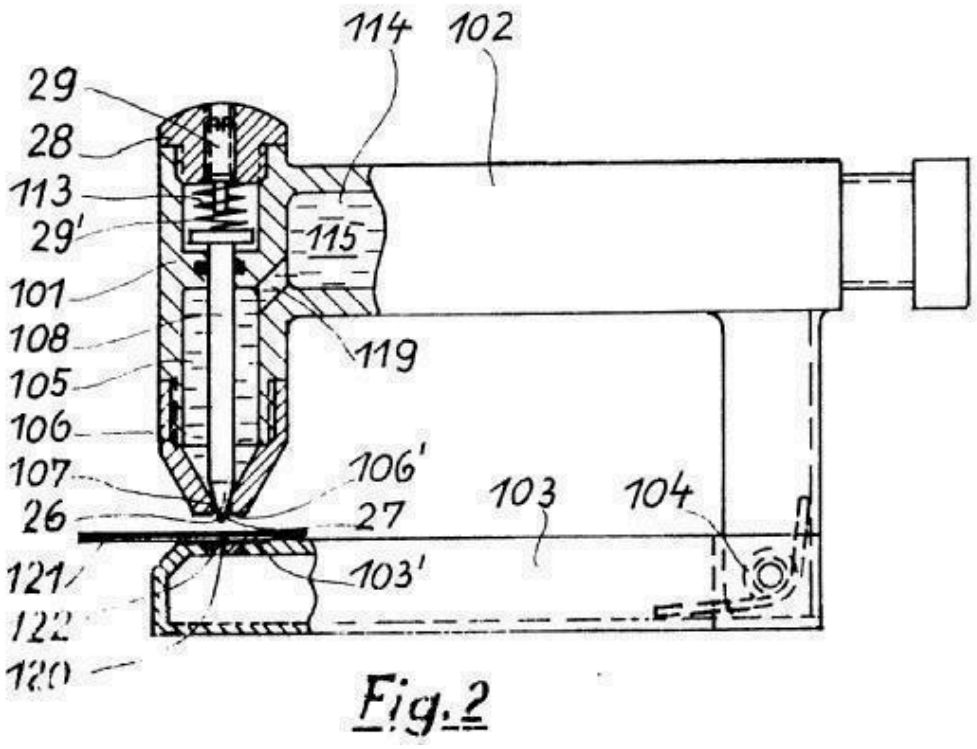

Fig.2

Example 5, from

US2003010439:

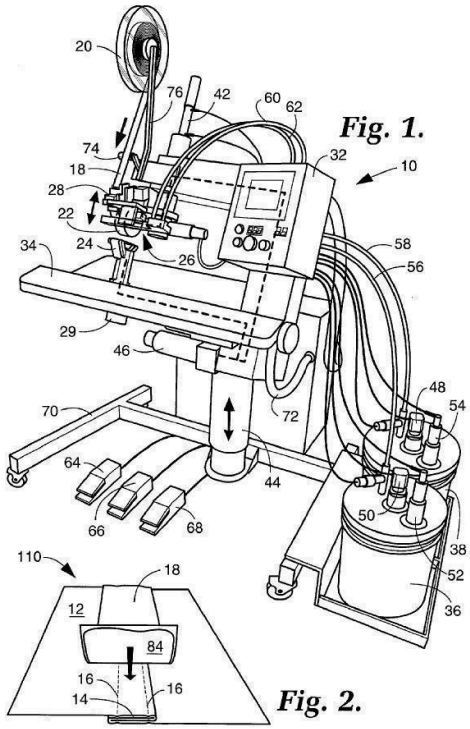

Fig. 1.

Fig. 2.

B29C 66/847

{Drilling standard machine type}

Definition statement

This place covers:

Example 1, from

JP61189925:

第 1 図

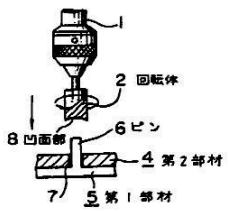

第 3 図

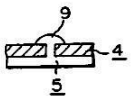

第 2 図

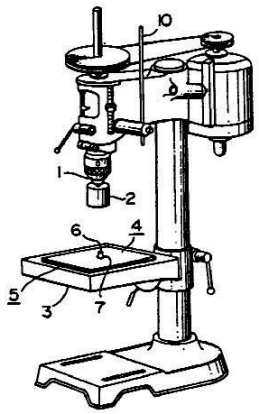

B29C 66/849

{Packaging machines}

Definition statement

This place covers:

Example 1, from

CH373305:

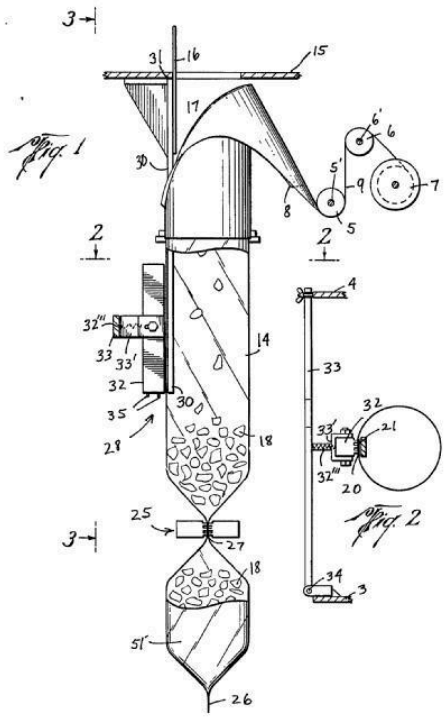

References

Informative references

Attention is drawn to the following places, which may be of interest for search:

Machines, apparatus or devices for, or methods of, packaging articles or materials, in general	B65B

B29C 66/8491

{welding through a filled container, e.g. tube or bag}

Definition statement

This place covers:

Example 1, from

DE1511540:

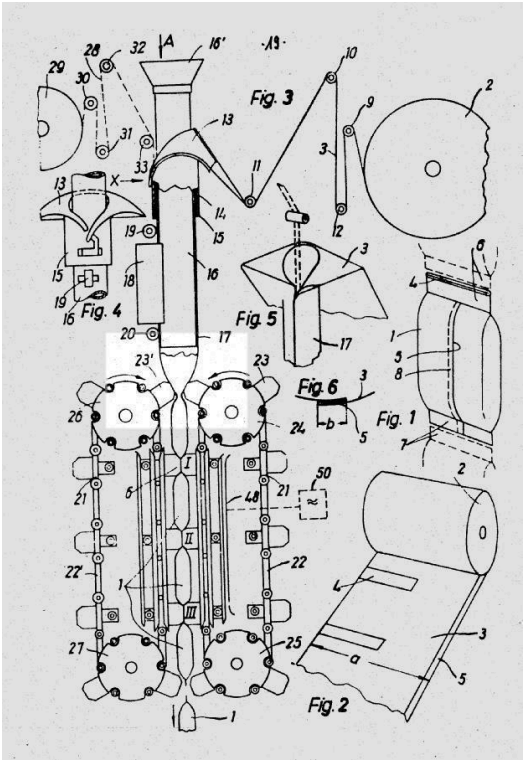

Example 2, from

WO2011001528:

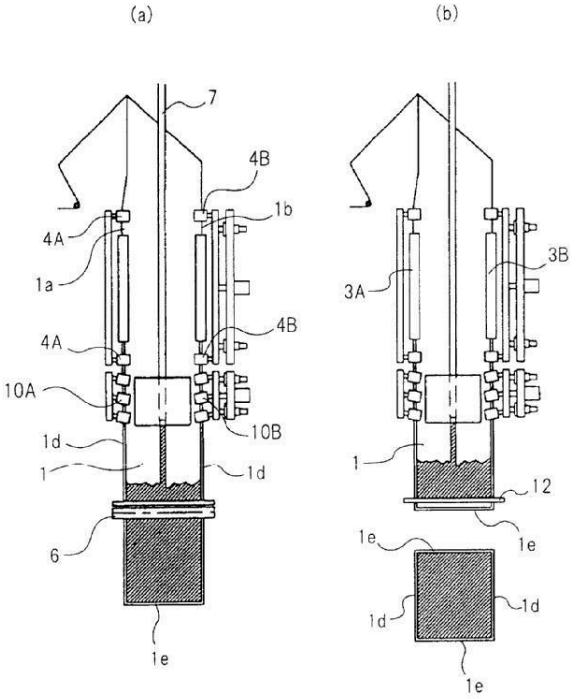

References

Informative references

Attention is drawn to the following places, which may be of interest for search:

Subdividing filled tubes to form two or more packages by sealing involving displacement of contents	B65B 9/12

B29C 66/851

{Bag or container making machines}

References

Informative references

Attention is drawn to the following places, which may be of interest for search:

Making boxes, cartons, envelopes, or bags, in general	B31B

B29C 66/8511

{Bag making machines}

Definition statement

This place covers:

Example 1, from

CA1196848:

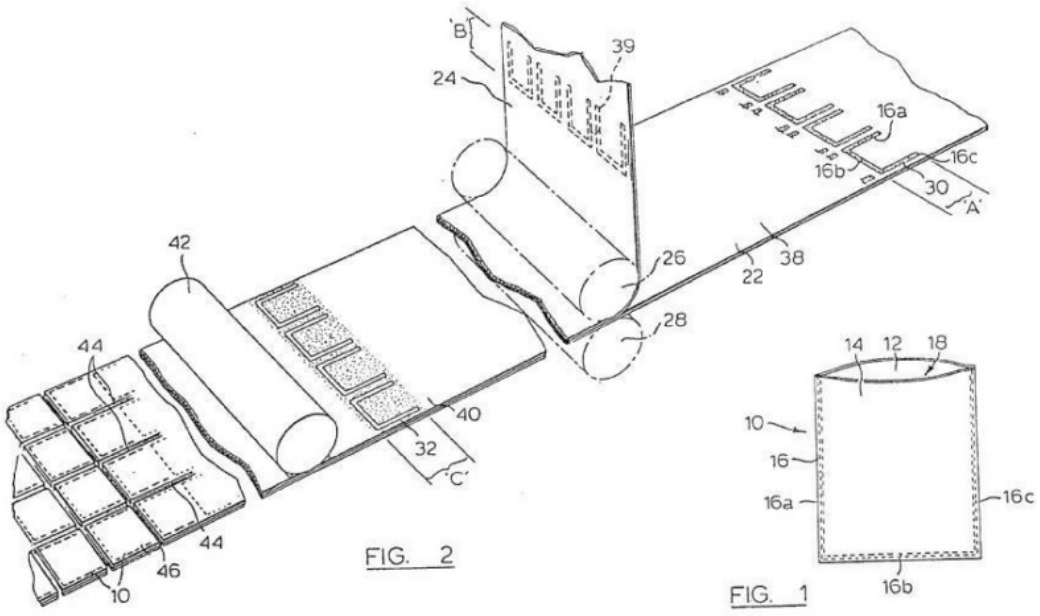

B29C 66/853

{Machines for changing web rolls or filaments, e.g. for joining a replacement web to an expiring web}

Definition statement

This place covers:

Example 1, from

EP2204274:

FIG. 1

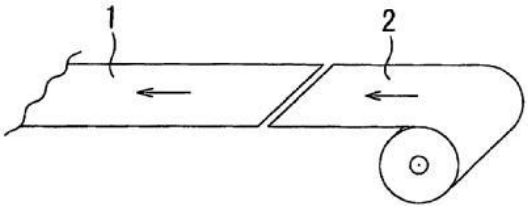

FIG. 2A

FIG. 2B

FIG. 2C

FIG. 2D

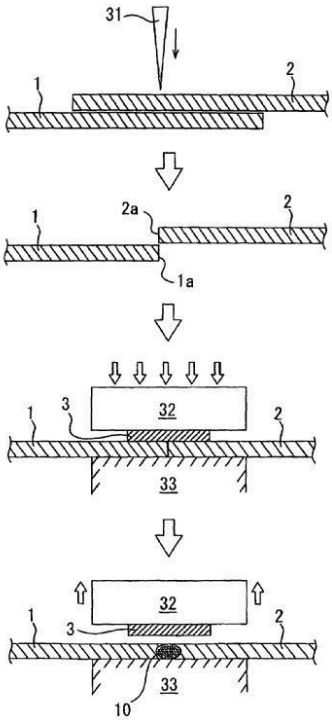

References

Informative references

Attention is drawn to the following places, which may be of interest for search:

Changing web rolls in general, by attaching, e.g. pasting, the replacement web to the expiring web	B65H 19/18

B29C 66/855

{Belt splicing machines}

Definition statement

This place covers:

Example 1, from

US4376668:

FIG. 2.

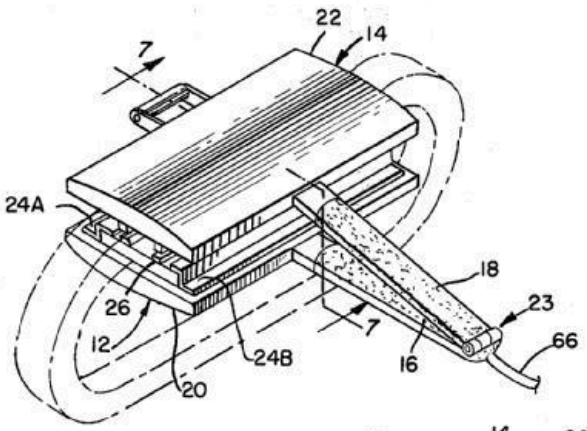

FIG. 8.

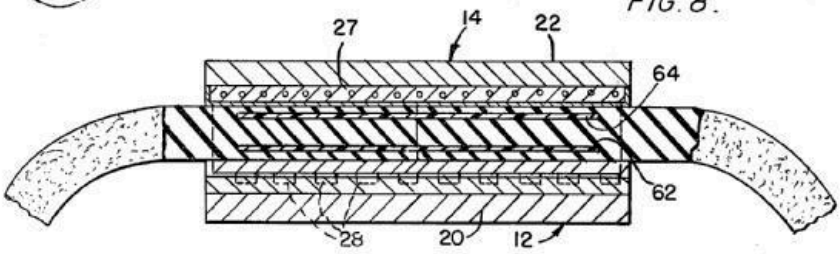

References

Informative references

Attention is drawn to the following places, which may be of interest for search:

Apparatus or tools for joining belts in general	F16G 3/003
Joining belts by sewing, sticking, vulcanising, or the like	F16G 3/10

B29C 66/857

{Medical tube welding machines}

Definition statement

This place covers:

Example 1, from

WO0062820:

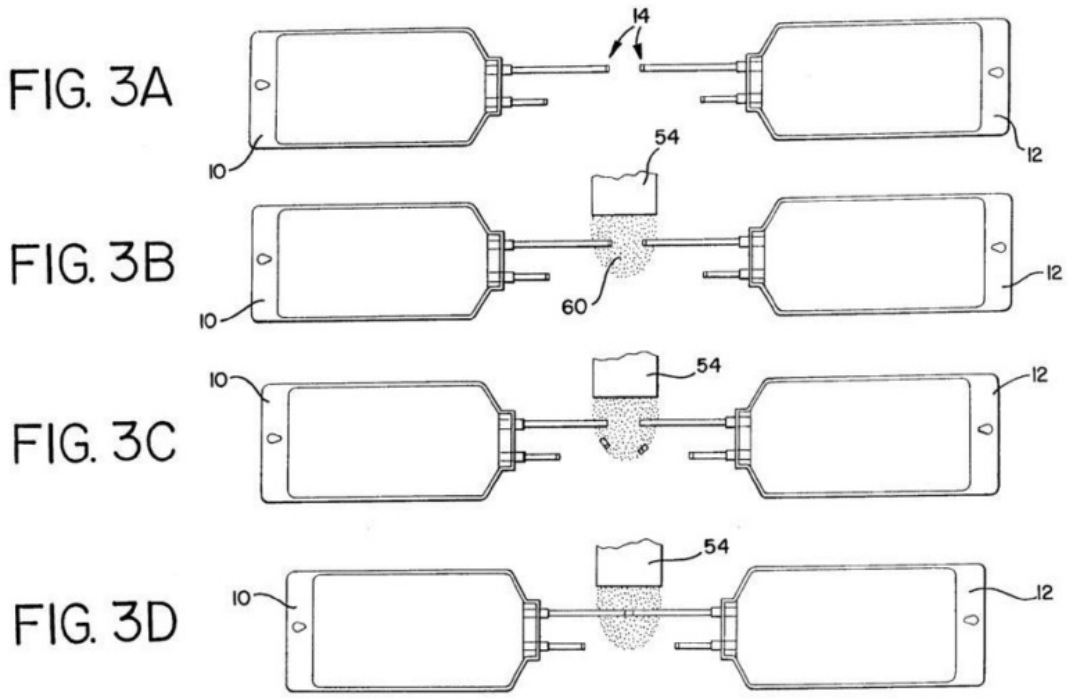

References

Informative references

Attention is drawn to the following places, which may be of interest for search:

Medical tube connectors, for connecting tubes having sealed ends, by cutting and welding	A61M 39/146

B29C 66/861

{Hand-held tools}

Definition statement

This place covers:

Example 1, from

TW467845B:

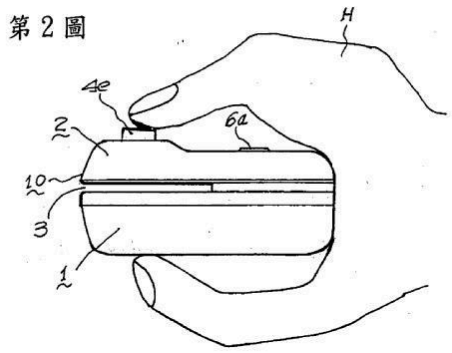

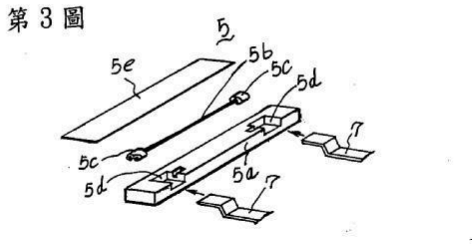

References

Informative references

Attention is drawn to the following places, which may be of interest for search:

Hand tools in general	B25
Hand tools for securing ends of binding material by welding, or heat-sealing or by applying adhesive	B65B 13/327
Devices for, or methods of, sealing or securing package folds or closures, by applying or generating heat by reciprocating or oscillating hand-operated members	B65B 51/148

B29C 66/8612

{Ironing tool type}

Definition statement

This place covers:

Example 1, from

US2008115885:

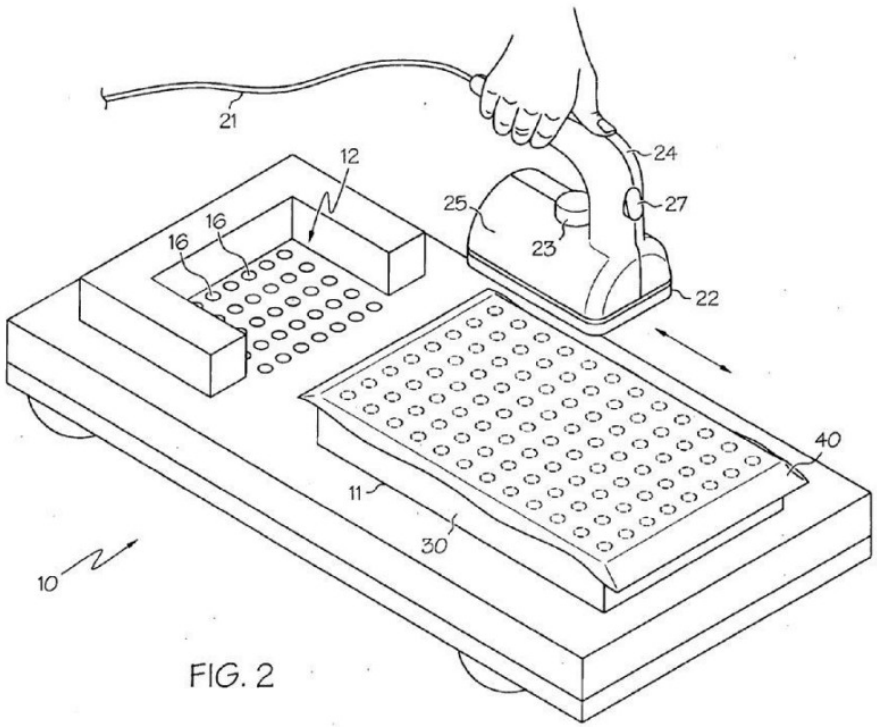

FIG. 2

References

Informative references

Attention is drawn to the following places, which may be of interest for search:

Irons for laying carpeting by using hot-melt adhesives	A47G 27/0443
Hand irons	D06F 75/00

B29C 66/8614

{Tongs, pincers or scissors}

Definition statement

This place covers:

Example 1, from

US2003127177:

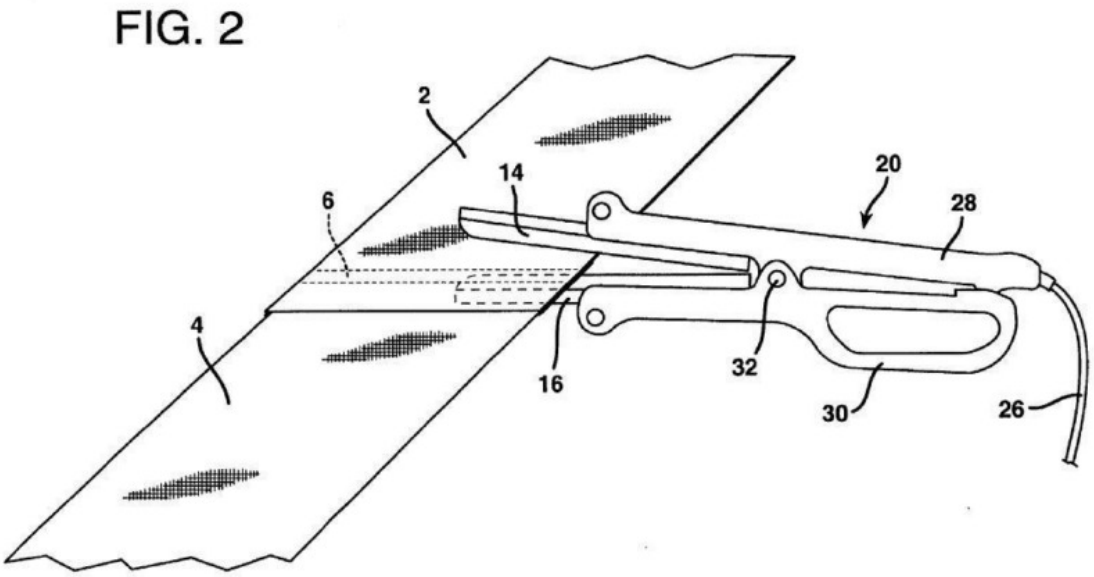

B29C 66/8616

{Pen or pencil like}

Definition statement

This place covers:

Example 1, from

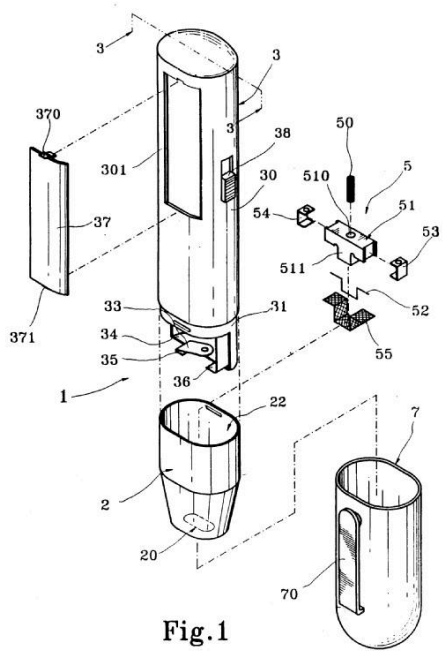

Fig.1

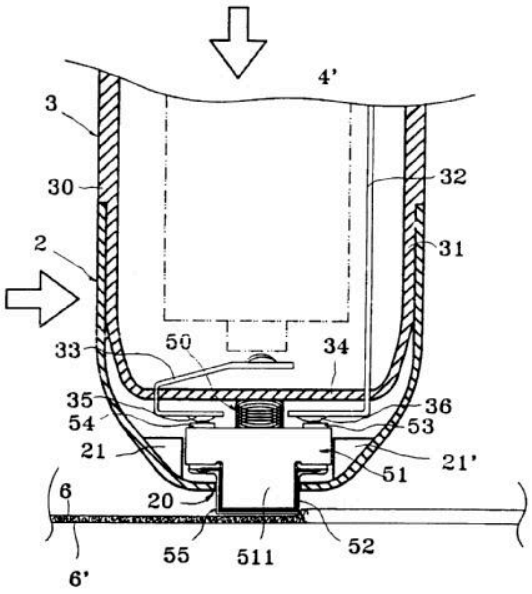

Fig5

B29C 66/863

{Robotised, e.g. mounted on a robot arm}

Definition statement

This place covers:

Example 1, from

EP2255952:

FIG. 4A

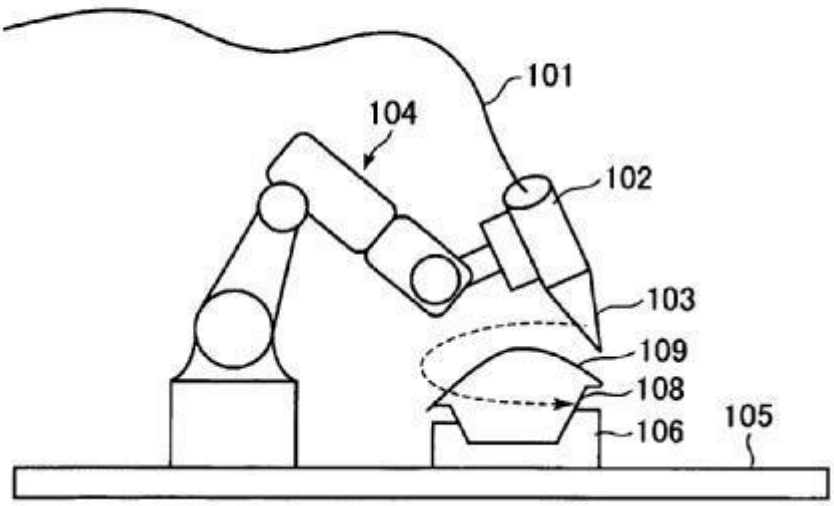

Example 2, from

EP2006066:

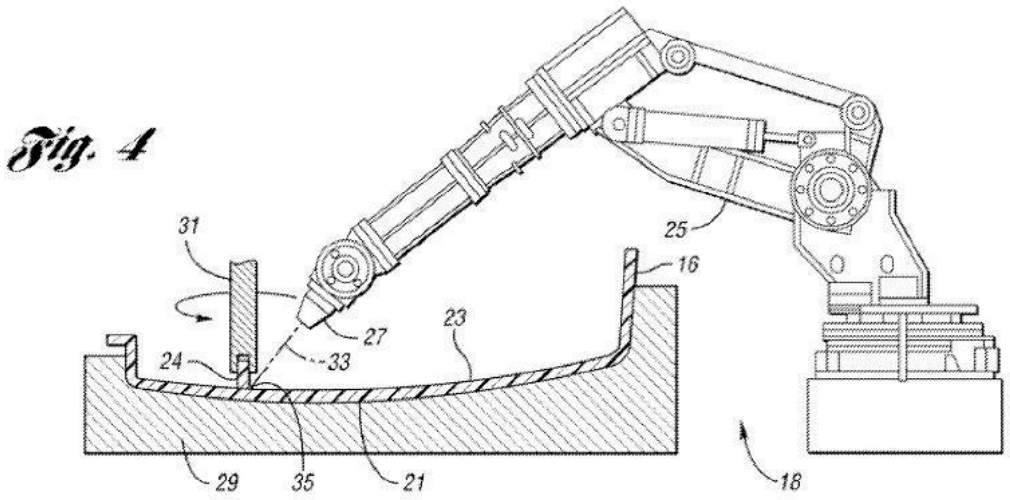

References

Informative references

Attention is drawn to the following places, which may be of interest for search:

Manipulators in general	B25J

B29C 66/8652

{being pushed by hand or being self-propelling}

Definition statement

This place covers:

Example 1, from

DE202008008145U:

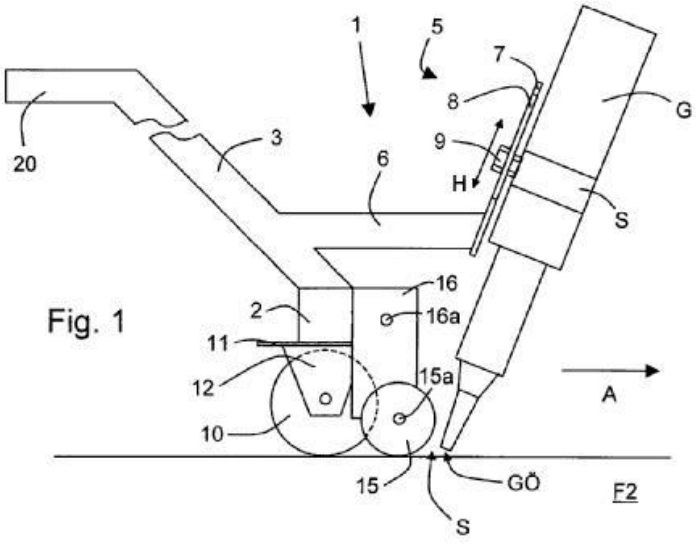

B29C 66/86521

{being self-propelling}

Definition statement

This place covers:

Example 1, from

US4913772:

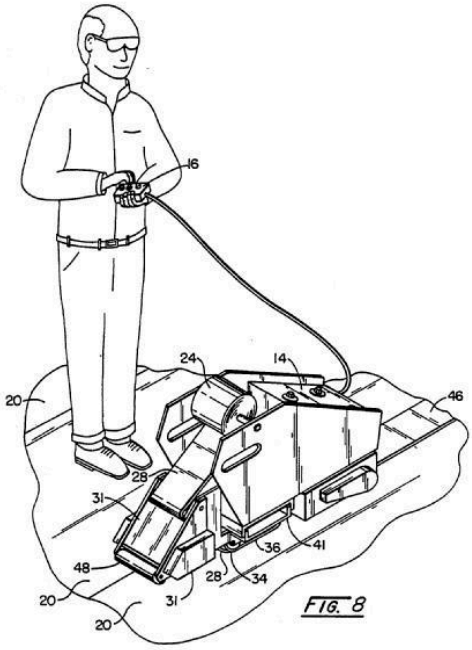

FIG. 8

B29C 66/86523

{the traction being made on the seam}

Definition statement

This place covers:

Example 1, from

DE9317104U:

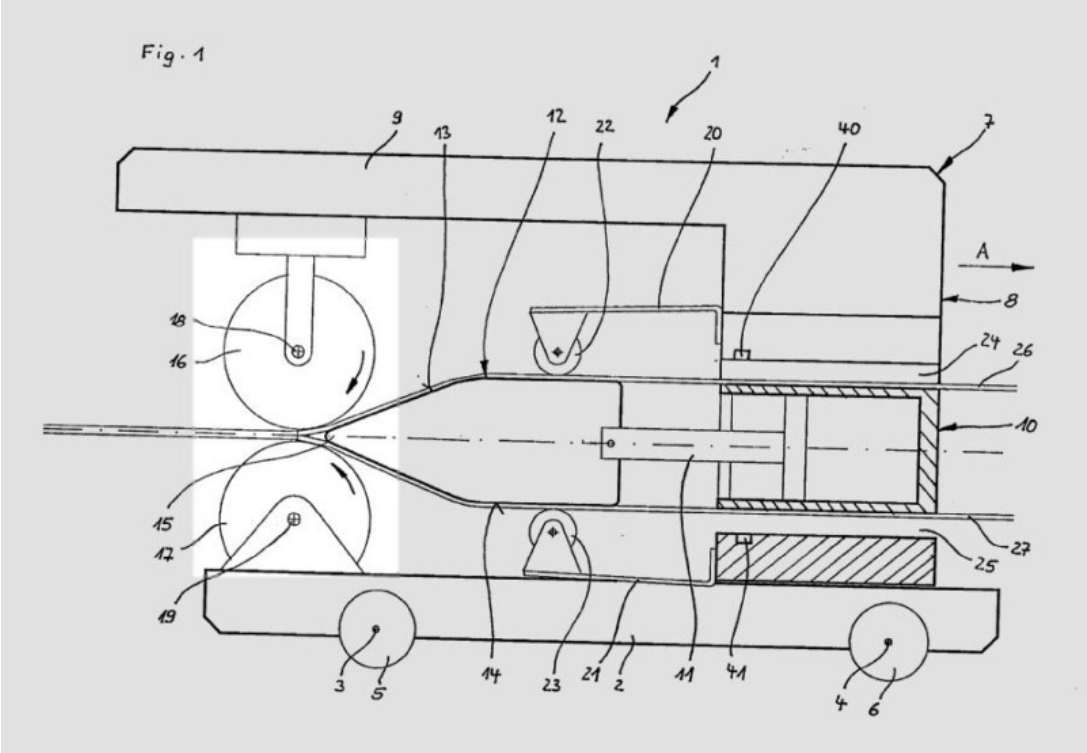

B29C 66/86533

{by rails}

Definition statement

This place covers:

Exampel 1, from

EP1464471:

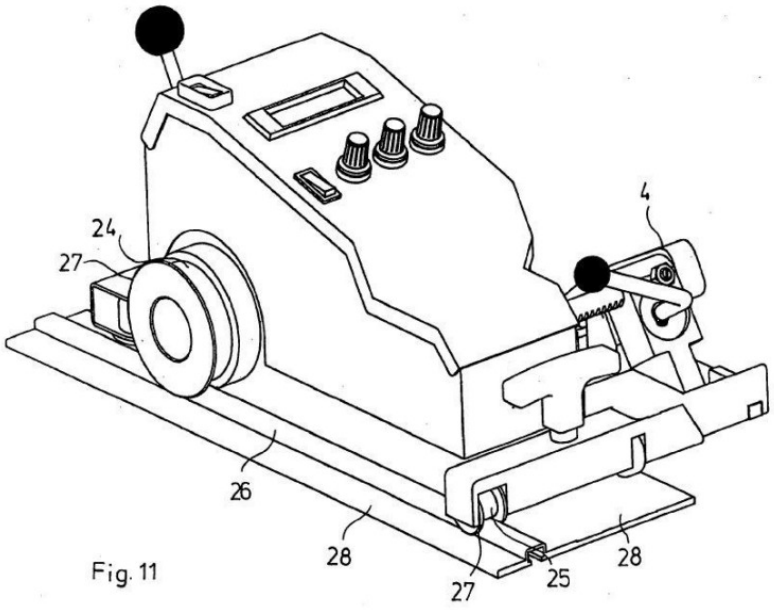

Fig. 11

B29C 66/86535

{by the edge of one of the parts to be joined or by a groove between the parts to be joined, e.g. using a roller}

Definition statement

This place covers:

Example 1, from

US3080910:

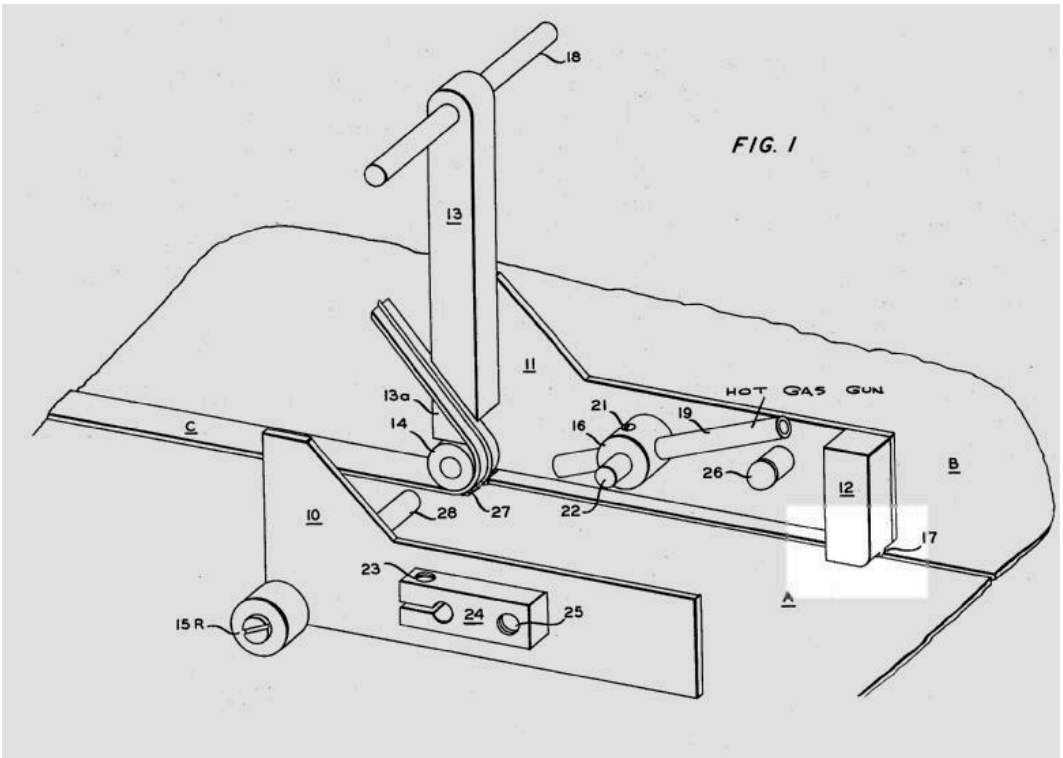

Example 2, from

DE29713474U:

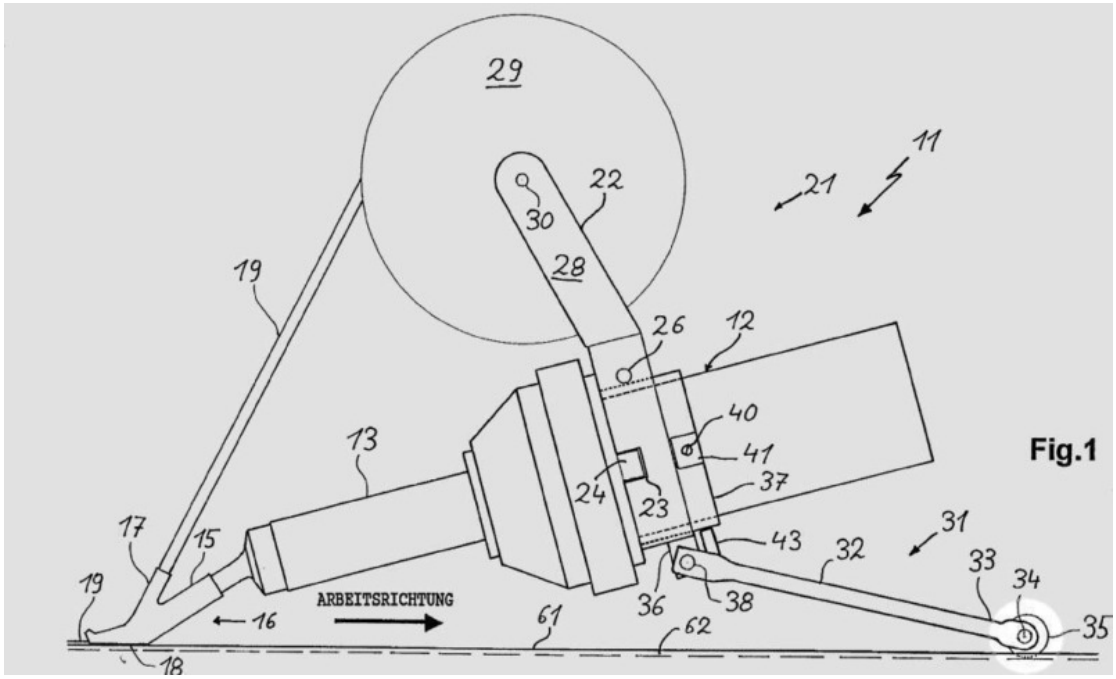

Fig.1

Example 3, from

EP0787572:

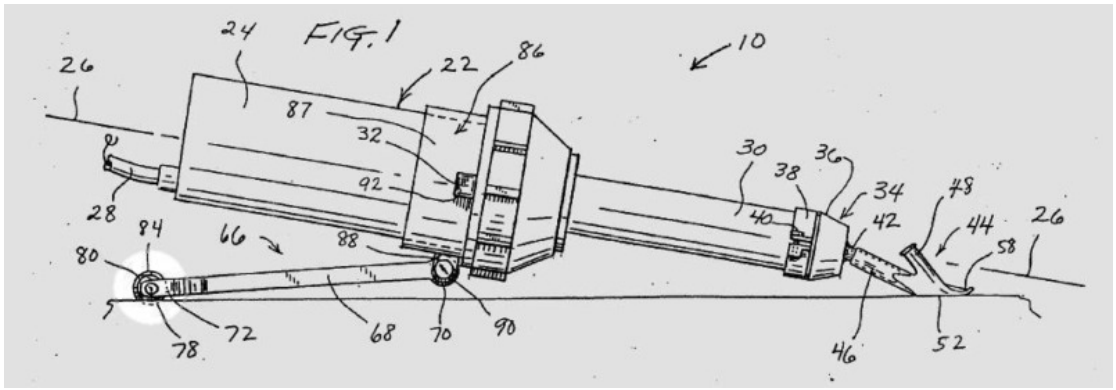

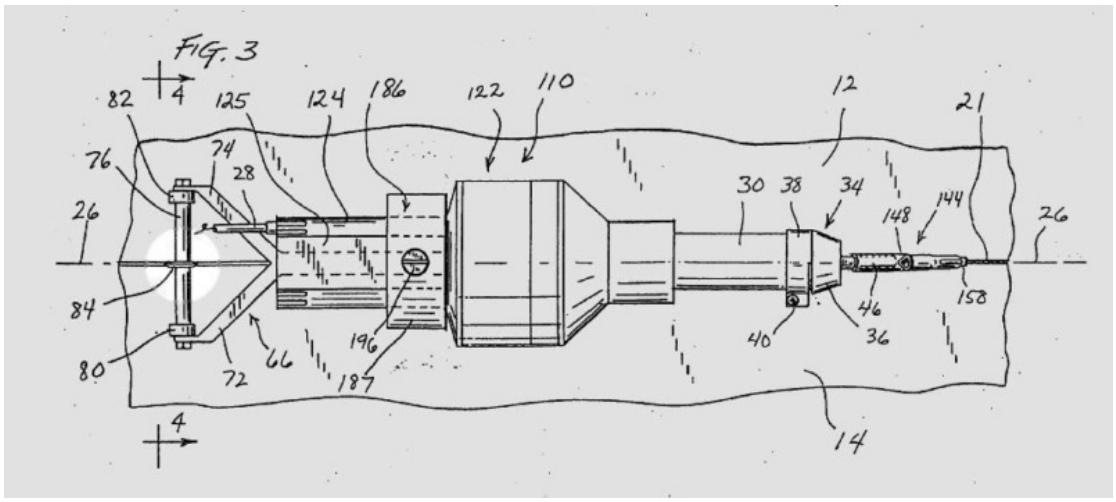

B29C 66/872

{Starting or stopping procedures}

References

Informative references

Attention is drawn to the following places, which may be of interest for search:

Trouble-shooting during starting or stopping moulding or shaping apparatus	B29C 37/0096

B29C 66/874

{Safety measures or devices}

References

Informative references

Attention is drawn to the following places, which may be of interest for search:

Safety-devices for packaging machines	B65B 57/005
Safety devices specially designed for welding in general	F16P 1/06

B29C 66/8742

{for operators (B29C 66/002 takes precedence)}

References

Informative references

Attention is drawn to the following places, which may be of interest for search:

Masks, shields or hoods for welders	A61F 9/06

B29C 66/8748

{involving the use of warnings}

References

Informative references

Attention is drawn to the following places, which may be of interest for search:

Audible or visible alarm signals for packaging machines	B65B 57/18

B29C 66/9121

{by measuring the temperature}

References

Informative references

Attention is drawn to the following places, which may be of interest for search:

Measuring temperature	G01K

B29C 66/91212

{involving measurement means being part of the welding jaws, e.g. integrated in the welding jaws}

Definition statement

This place covers:

Example 1 (to be also classified in B29C 66/91231), from

JP2002104311:

【図１】

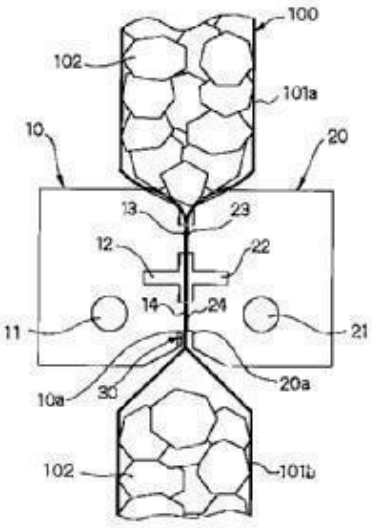

【図２】

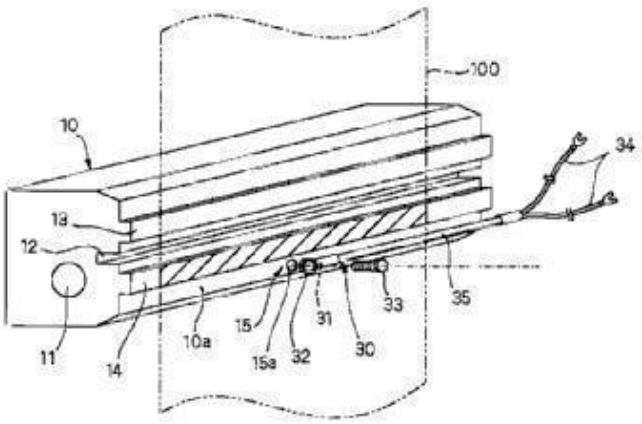

B29C 66/91216

{enabling contactless temperature measurements, e.g. using a pyrometer}

Definition statement

This place covers:

Example 1 (to be also classified in B29C 66/91221), from

WO2006042251:

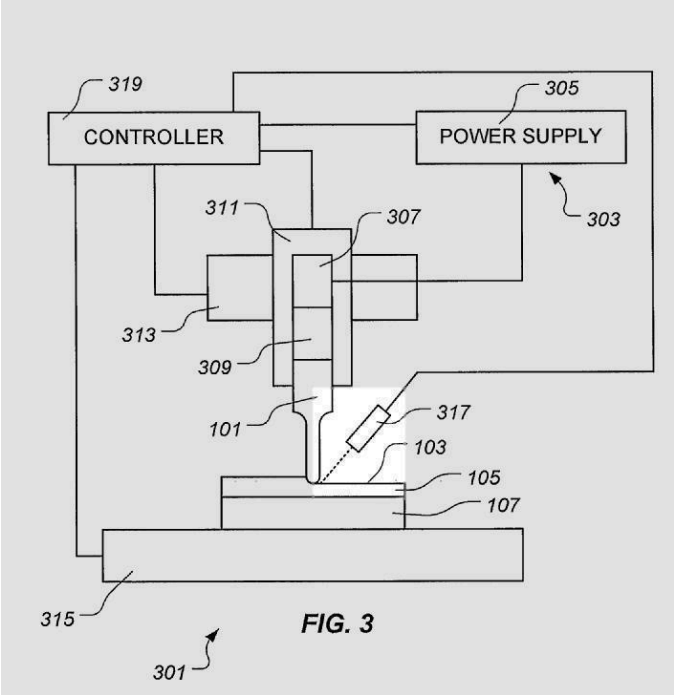

Example 2 (to be also classified in B29C 66/91231), from

EP2216167:

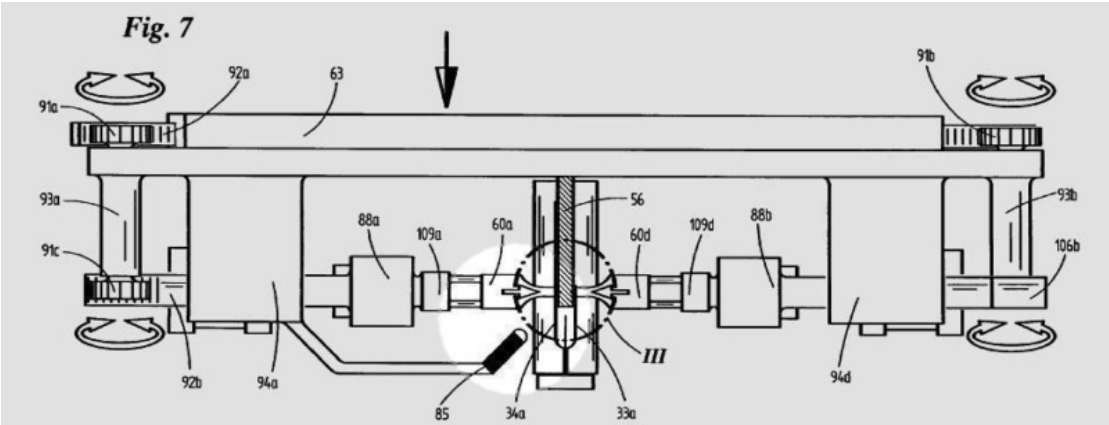

References

Informative references

Attention is drawn to the following places, which may be of interest for search:

Radiation pyrometry	G01J 5/00

B29C 66/91218

{using colour change, e.g. using separate colour indicators}

References

Informative references

Attention is drawn to the following places, which may be of interest for search:

Measuring temperature using change of colour or translucency	G01K 11/12

B29C 66/91221

{of the parts to be joined}

Definition statement

This place covers:

Example 1, from

EP1225028:

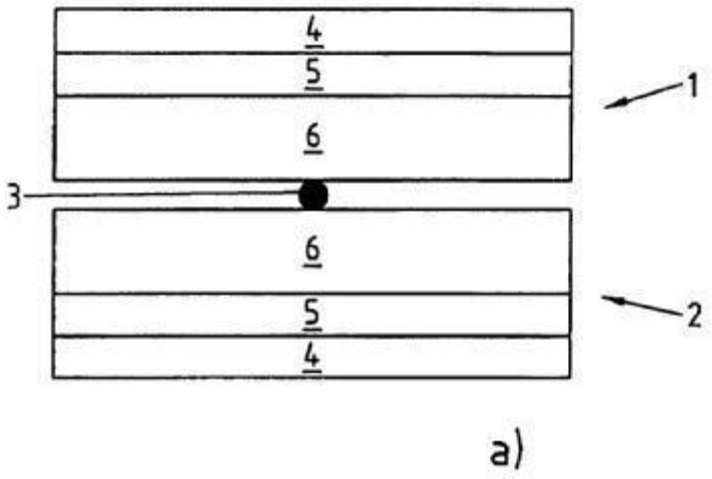

Example 2, from

WO0181070:

FIG. 7

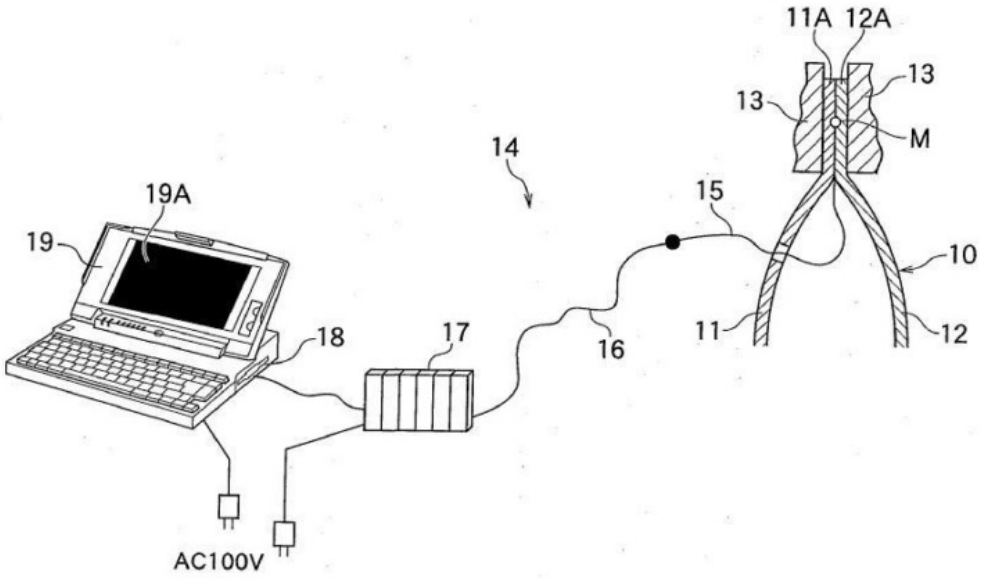

B29C 66/91231

{of the joining tool}

Definition statement

This place covers:

Example 1 (to be also classified by B29C 66/91212), from

JP2002104311:

【図１】

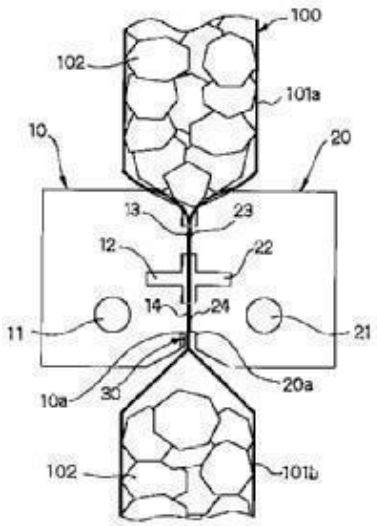

【図２】

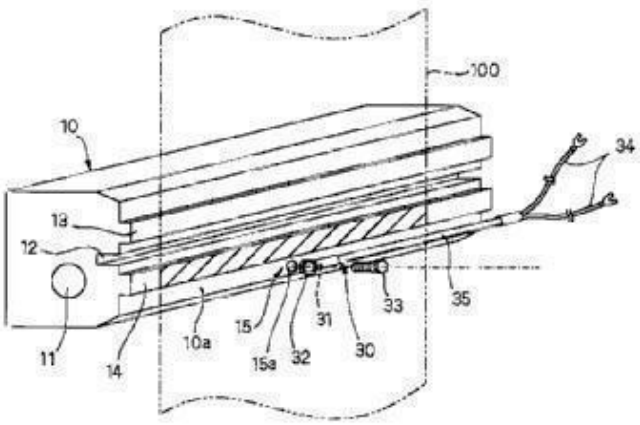

Example 2 (to be also classified by B29C 66/91216), from

EP2216167:

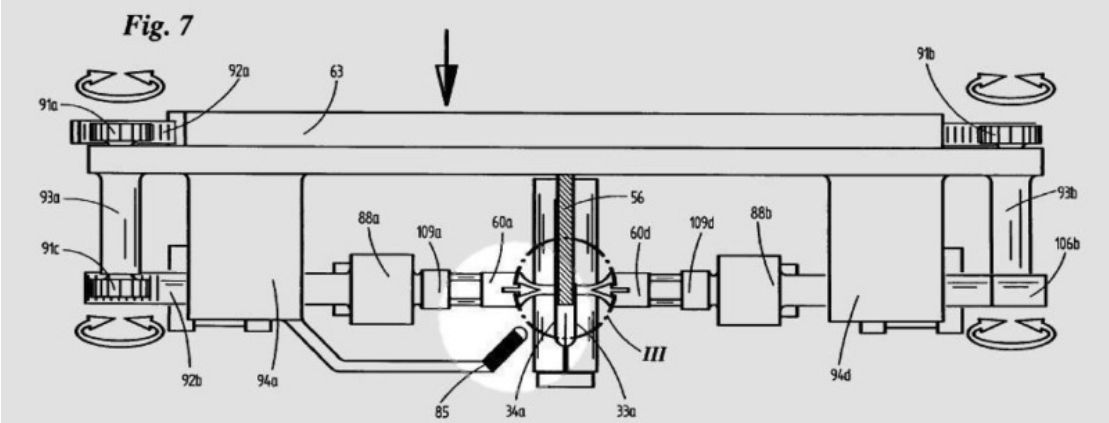

B29C 66/9131

{by measuring the heat or the thermal flux, i.e. the heat flux}

References

Informative references

Attention is drawn to the following places, which may be of interest for search:

Measuring quantity of heat	G01K 17/00

B29C 66/9141

{by controlling or regulating the temperature}

References

Informative references

Attention is drawn to the following places, which may be of interest for search:

Heat seal temperature control of devices for, or method of, sealing or securing package folds or closures by applying or generating heat	B65B 2051/105

B29C 66/91423

{using joining tools having different temperature zones or using several joining tools with different temperatures}

Definition statement

This place covers:

Example 1, from

WO9706205:

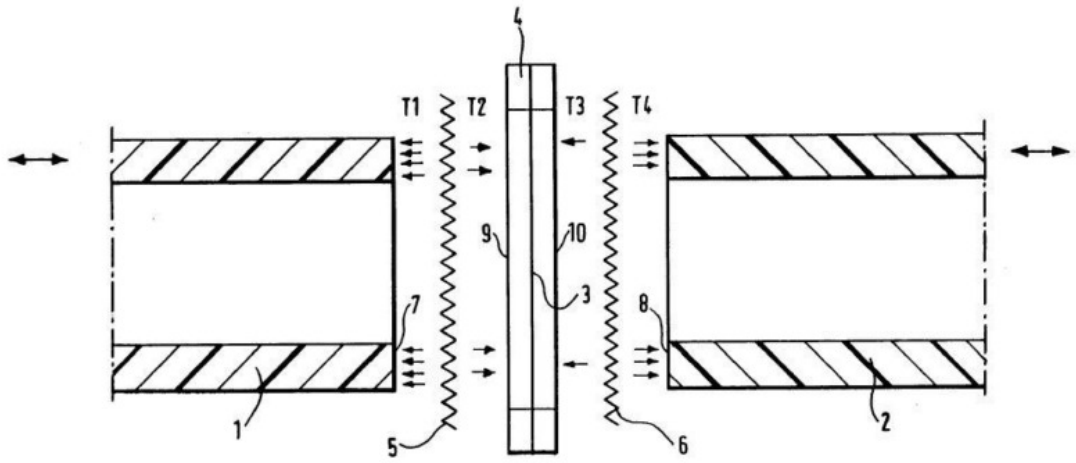

FIG.1.

B29C 66/91445

{by steps}

Definition statement

This place covers:

Example 1, from

EP2018088:

Fig.4

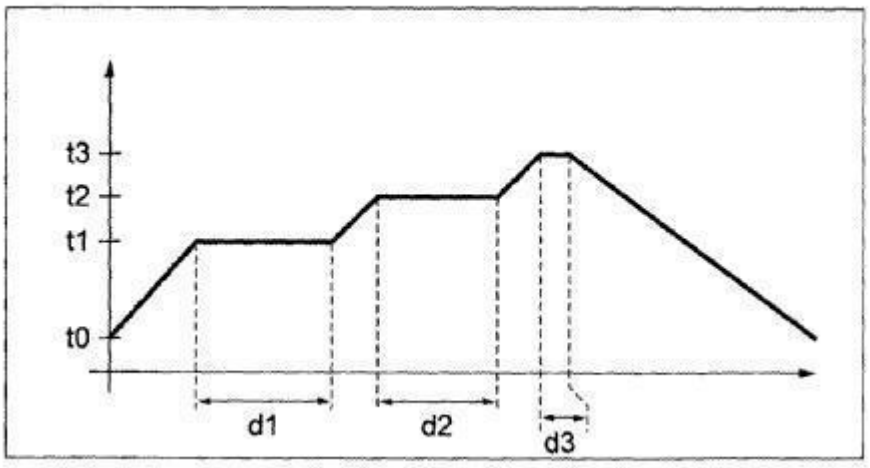

B29C 66/91643

{following a heat-time profile (B29C 65/38 takes precedence)}

Definition statement

This place covers:

Example 1, from

US5561964:

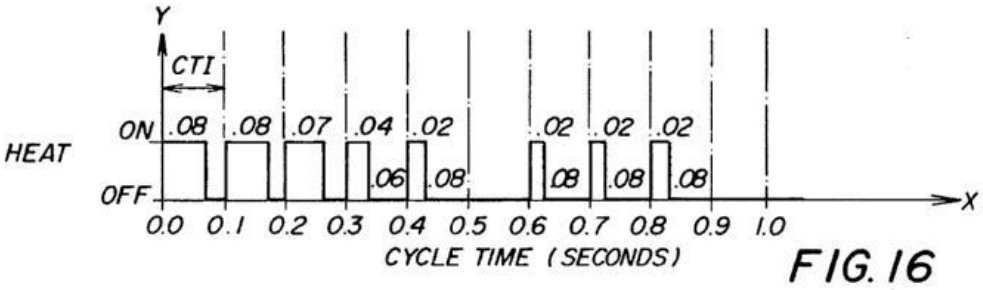

FIG. 16

B29C 66/91645

{by steps}

Definition statement

This place covers:

Example 1, from

DE19545317:

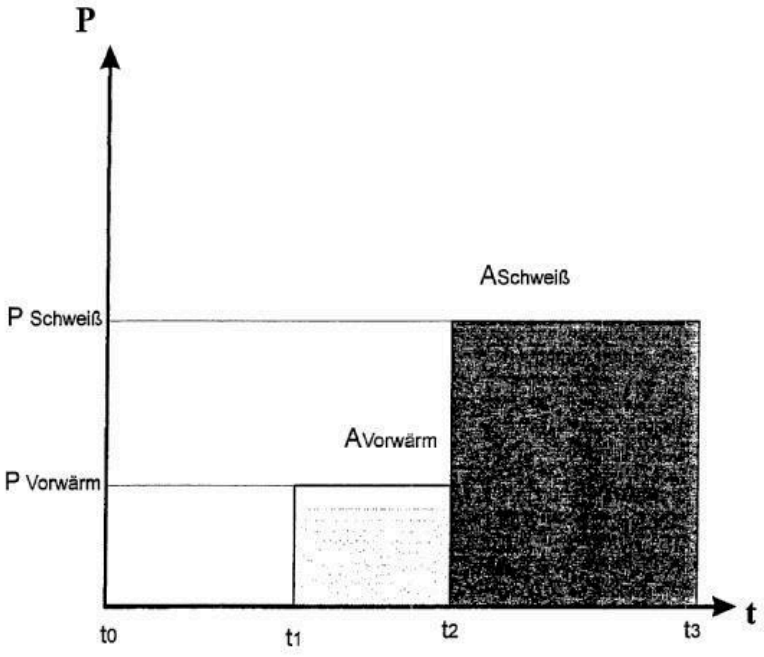

B29C 66/91653

{by controlling or regulating the voltage, i.e. the electric potential difference or electric tension}

Definition statement

This place covers:

Example 1, from

JPH0581103U:

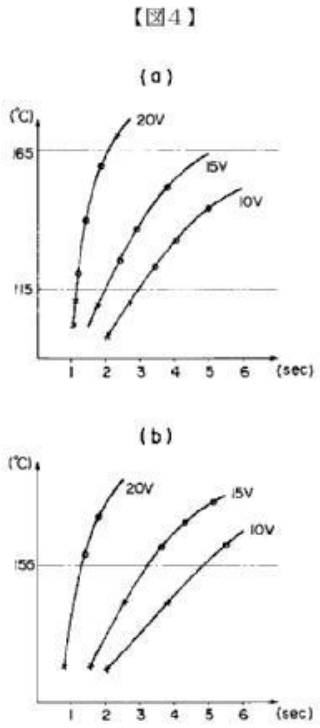

B29C 66/91655

{by controlling or regulating the current intensity}

Definition statement

This place covers:

Example 1, from

WO9516557:

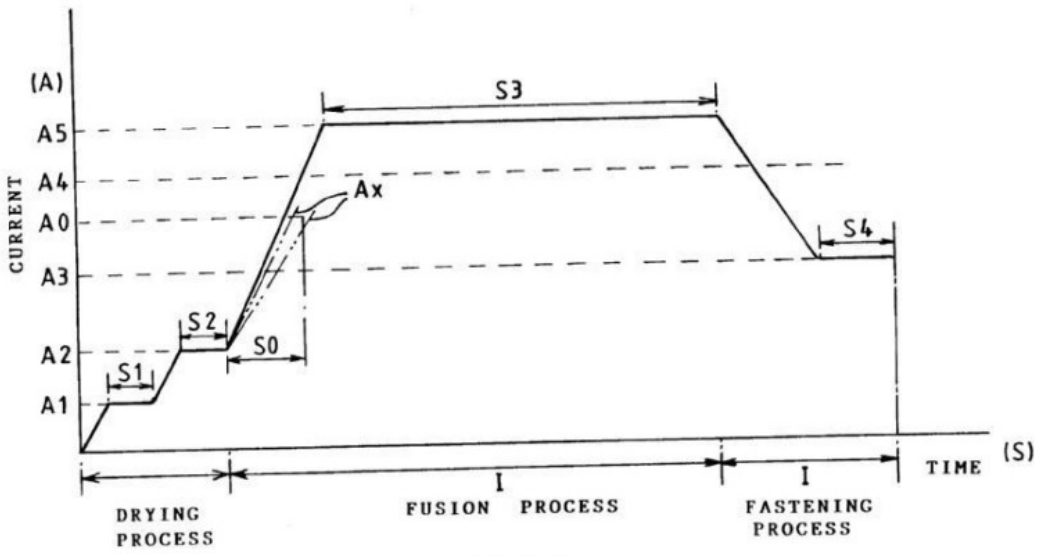

FIG.1.

B29C 66/91933

{higher than said fusion temperature}

Special rules of classification

Documents merely stating that the welding occurs above the melting temperature of the parts to be joined do not belong to this class.

Documents specifying the welding temperature by giving actual values, e.g. absolute or in relation to the melting temperature, do belong to this class

B29C 67/00

Shaping techniques not covered by groups B29C 39/00 - B29C 65/00, B29C 70/00 or B29C 73/00

Definition statement

This place covers:

e.g. plants for moulding, curing or finishing articles, e.g. disposable plants, plants mounted on vehicles; e.g. lay-out of plants or machines, e.g. arrangement, sequence or exchange of machines, machine parts or tools not otherwise provided for; e.g. modular plants or machines, i.e. plants or machines build up from modular parts

B29C 69/00

Combinations of shaping techniques not provided for in a single one of main groups B29C 39/00 - B29C 67/00, e.g. associations of moulding and joining techniques; Apparatus therefore {(B29C 48/001 takes precedence)}

Relationships with other classification places

The group B29C 69/00 and it subgroups cover combination(s) of shaping techniques not otherwise provided for in B29C, where the invention lies in the combination of techniques - not in the single technique as such - and wherein the invention is related to a shaping problem.

Documents not relating to a shaping problem do not belong to this group. For instance, documents relating to combined operations for making a particular article, which involves a mere combination of moulding steps, but failing to relate to a moulding problem as such, do not belong to this group; such documents do belong to the relevant B29D entry, if such entry exists, and if not then to the relevant product/article entry.

References

Limiting references

This place does not cover:

Injection moulding combined with a final shaping operation	B29C 45/0053
Extrusion moulding combined with other shaping operations	B29C 48/001
Auxiliary operations prior to blow moulding	B29C 49/4252
Auxiliary operations after blow moulding	B29C 49/4273
Auxiliary operations prior to thermoforming	B29C 51/264
Auxiliary operations after thermoforming	B29C 51/266

B29C 69/004

{making articles by joining parts moulded in separate cavities, said parts being in said separate cavities during said joining (B29C 45/006, B29C 51/267 take precedence)}

Relationships with other classification places

Documents classified in this group relate to a joining problem. Documents not relating to a joining problem do not belong to this group. For instance, documents relating to combined operations for making a particular article, which involves a mere combination of the step of moulding parts in separate cavities and the step of joining said parts, but failing to relate to a joining problem as such, do not belong to this group; such documents do belong to the relevant B29D entry, if such entry exists, and if not then to the relevant product/article entry.

B29C 69/005

{cutting-off or cutting-out a part of a strip-like or sheet-like material, transferring that part and fixing it to an article (if labeling see B65C, in combination with box-making B31B 50/81; labelling in general B65C)}

Relationships with other classification places

Documents classified in this group relate to a joining problem. Documents not relating to a joining problem do not belong to this group. For instance, documents relating to combined operations for making a particular article, which involves a mere combination of the step of cutting-off or cutting-out a part of a strip-like or sheet-like material, the step of transferring said part and the step of fixing said part to an article, but failing to relate to a joining problem as such, do not belong to this group; such documents do belong to the relevant B29D entry, if such entry exists, and if not then to the relevant product/article entry.

B29C 70/00

Shaping composites, i.e. plastics material comprising reinforcements, fillers or preformed parts, e.g. inserts

References

Informative references

Attention is drawn to the following places, which may be of interest for search:

Nanotechnology for materials or surface science, e.g. nanocomposites	B82Y 30/00
Fibre reinforced ceramics	C04B 35/80
Carbon-Carbon composites	C04B 35/83
Chemical aspects of manufacture of articles or shaped materials containing macromolecular substances	C08J 5/00
Alloys containing metallic or non-metallic fibres or filaments	C22C 49/00
Testing of composites	G01N 25/72
CAD/CAM	G06F 30/00

Glossary of terms

In this place, the following terms or expressions are used with the meaning indicated:

Fibre or fiber	General expression for a reinforcement in the form of a bundle of filaments.
Filament	Single reinforcing body of high aspect ratio, typically produced artificially by pressing a fluid through a small diameter orifice (spinneret) and allowing the fluid to solidify after leaving the spinneret and being subjected to cooling, drying or a chemical reaction. The filament can also come from a natural source (single filament of a plant or animal fibre).
Roving	Bundle of fibres or collection of a large number of filaments resulting in a bundle of substantially higher cross section than that of a single fibre.
Whisker	Typically a short length filament.

B29C 70/02

comprising combinations of reinforcements, {e.g. non-specified reinforcements, fibrous reinforcing inserts} and fillers, {e.g. particulate fillers}, incorporated in matrix material, forming one or more layers and with or without non-reinforced or non-filled layers {(combinations of fibrous reinforcement only B29C 70/04; combinations of fillers only B29C 70/58; combinations with non reinforcing inserts, e.g. foam blocks, B29C 70/68)}

References

Limiting references

This place does not cover:

Shaping composites of combinations of different types of fibres	B29C 70/08

Further details of subgroups

B29C 70/023

Reinforcing inserts, e.g. bars, profiles, local reinforcements other than fibrous

B29C 70/025

combinations of fibrous reinforcements and filler

B29C 70/04

comprising reinforcements only, e.g. self-reinforcing plastics

Definition statement

This place covers:

heating and fusing of thermoplastic fibres or high aspect ratio elements with high molecular orientation, without the use of a matrix material or with matrix material of the same thermoplastic material as the fibres, yielding a plastic product with anisotropic properties.

Example: heating and compressing of HDPE or PP fibres.

B29C 70/06

Fibrous reinforcements only

Definition statement

This place covers:

This is not a subgroup of self reinforced plastics unlike the title of B29C 70/04 suggests.

This is in fact the head group of fibre reinforced polymers where there is a distinct fibrous reinforcement and a polymer matrix material.

Special rules of classification

Illustrative example of subject matter classified in B29C 70/081:

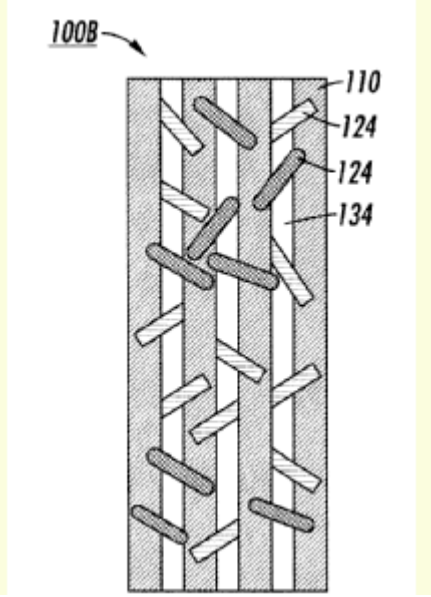

EP2112192

Illustrative example of subject matter classified in B29C 70/083:

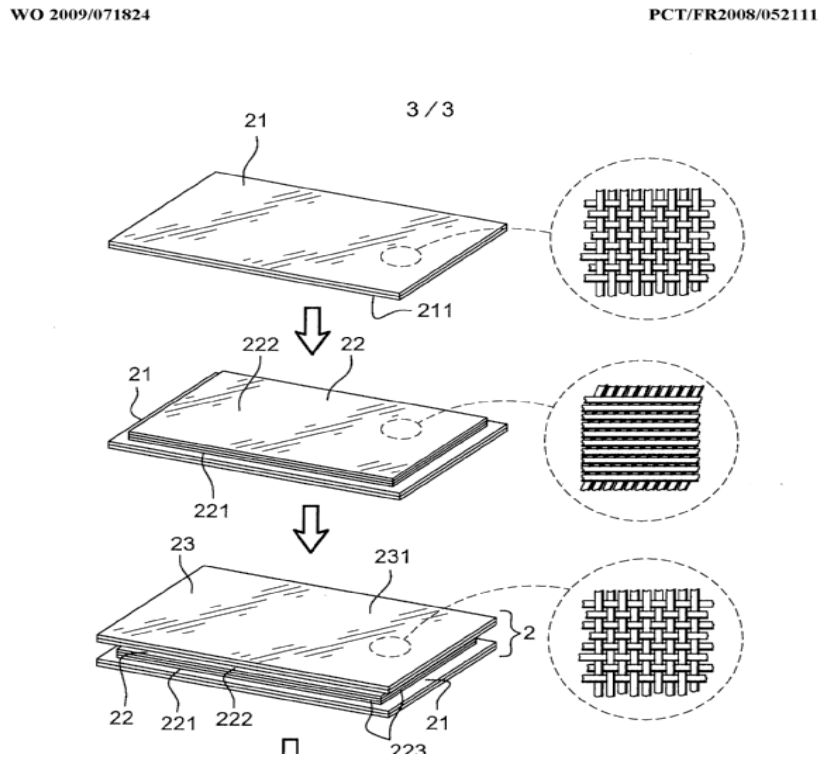

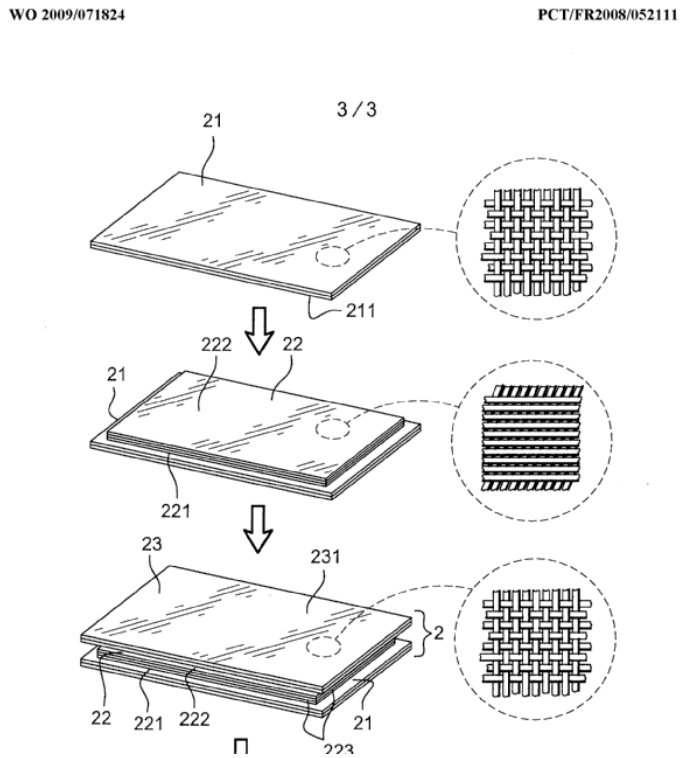

Illustrative example of subject matter classified in B29C 70/085:

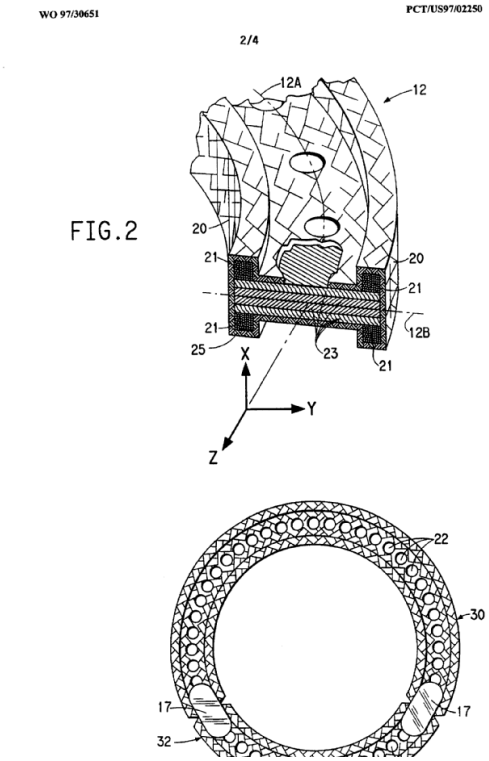

B29C 70/086

{and with one or more layers of pure plastics material, e.g. foam layers (applying a non-preformed coating, e.g. a gel-coat, B29C 37/0025; with foam blocks B29C 70/86)}

References

Informative references

Attention is drawn to the following places, which may be of interest for search:

Use of gel coats	B29C 37/0032

Special rules of classification

Illustrative example of subject matter classified in B29C 70/086

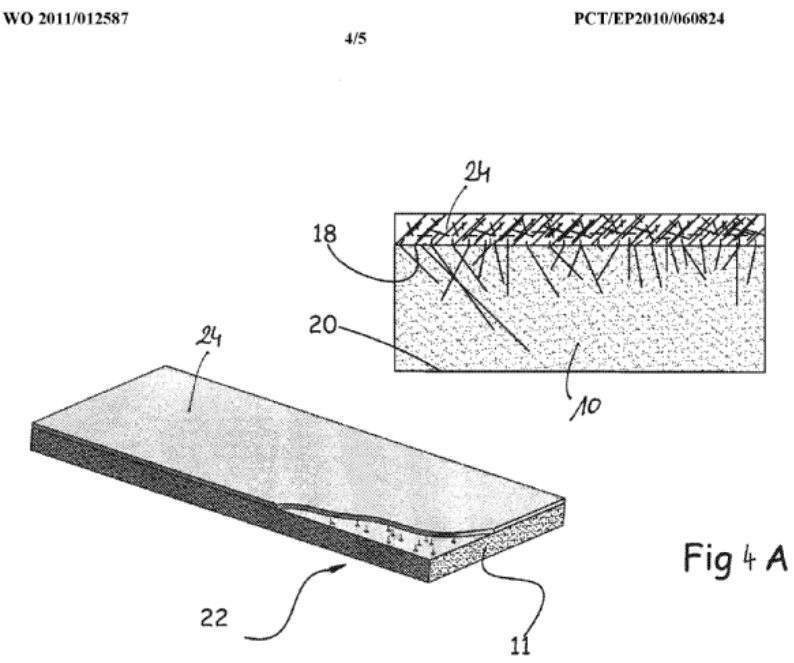

Fig 4 A

B29C 70/10

characterised by the structure of fibrous reinforcements {, e.g. hollow fibres}

Definition statement

This place covers:

technical details of a filaments or fibres, e.g. by cross sectional shape, surface treatment, molecular orientation

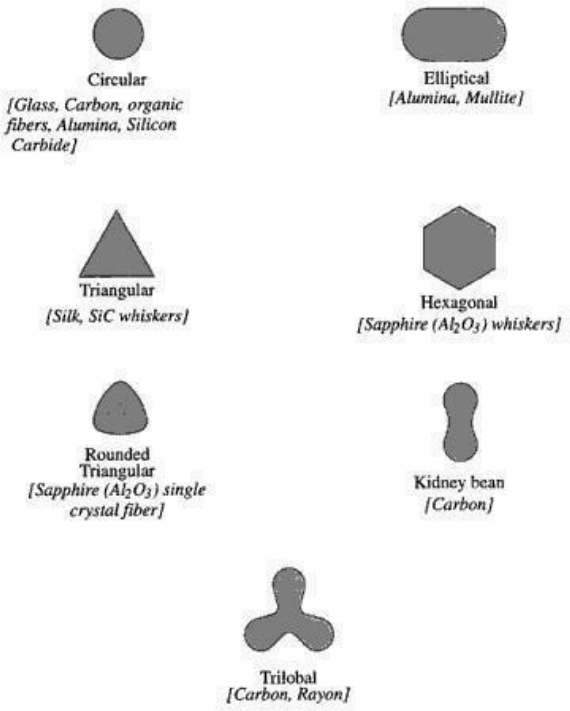

Figure 2.13 Fibers can have variety of cross-sectional shapes, although most fibers have a more or less circular cross-section.

References

Informative references

Attention is drawn to the following places, which may be of interest for search:

Reinforcement yarns or threads for specific use in general industrial applications	D02G 3/447

B29C 70/12

using fibres of short length, e.g. in the form of a mat {(non-woven fabrics per se D04H 1/00)}

Definition statement

This place covers:

fibrous structures. Note that polymers containing short fibres without mutual connection are not considered fibrous structures and B29C 70/00. If the short fibres are connected, e.g. by bonding, it is considered a fibrous structure.

Relationships with other classification places

Use of short fibres as additive to a polymer are to be classified in the specific moulding technique. e.g. B29C 45/0005 (injection moulding using fibre reinforcements), B29C 48/0011 (extrusion moulding using fibre reinforcements)

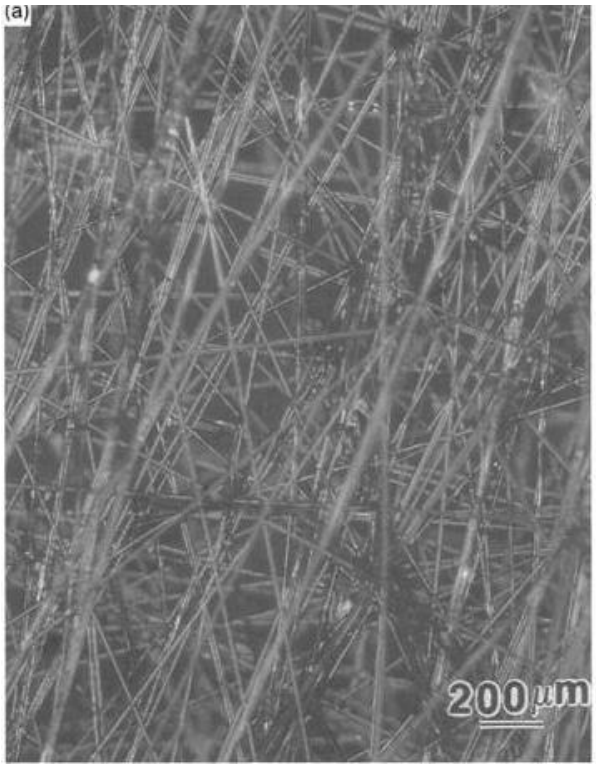

Synonyms and Keywords

In patent documents, the following abbreviations are often used:

Mat	non-woven

B29C 70/14

oriented

Definition statement

This place covers:

use of short fibres which are not randomly oriented:

DE 10 2009 020 452 A1 2010.11.25

Anhängende Zeichnungen

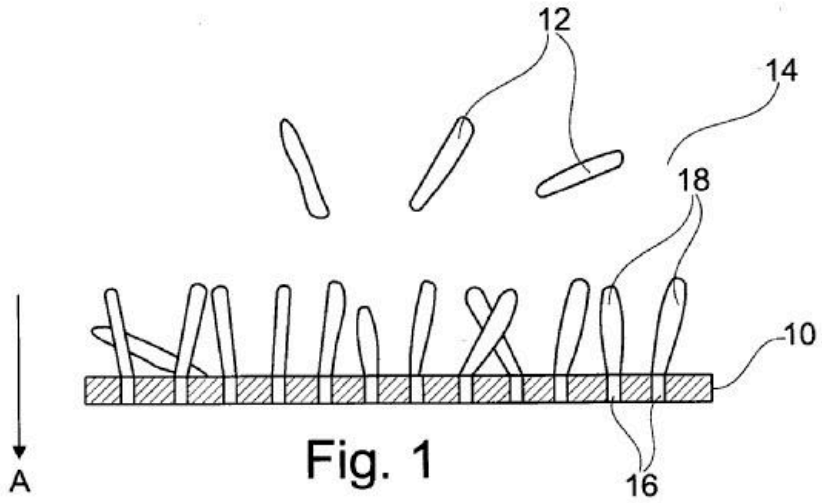

Fig. 1

U.S. Patent Feb. 11, 2003 Sheet 1 of 6 US 6,517,744 B1

Fig.1

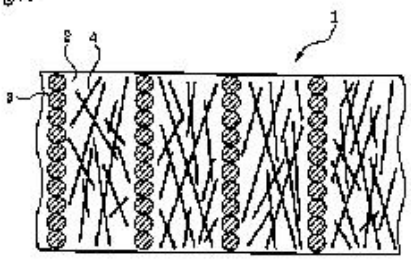

Fig.2

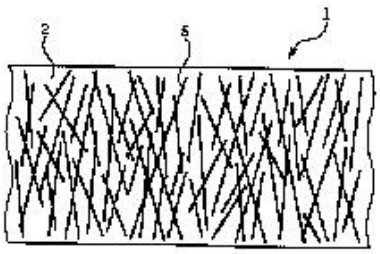

B29C 70/18

in the form of a mat, e.g. sheet moulding compound [SMC]

Definition statement

This place covers:

Sheet Molding Compound

SMC is a combination of chopped strands and filled resin in the form of a sheet. Processing SMC by compression molding produces bodywork or structural automotive components and electrical or electronic machine housings in large industrial volumes. The process is also used for other products such as sanitary ware (baths) and urban furniture (stadium and cinema seating). TheSMC contains all the components needed to mould the final part (resin, reinforcement, filler, catalyst, low profile additives, etc.) in a malleable and non-tacky sheet. SMC is made from chopped strands sandwiched between two layers of film, onto which the resin paste has already been applied. The SMC passes through a compaction system that ensures complete strand impregnation before being wound into rolls. These are stored for a few days before molding to allow the prepreg to thicken to a moldable viscosity.



B29C 70/20

oriented in a single direction, e.g. roofing or other parallel fibres {(B29C 70/083, B29C 70/226 take precedence)}

Definition statement

This place covers:

Examples:

unidirectional prepregs, moulding compounds with unidirectional fibres.

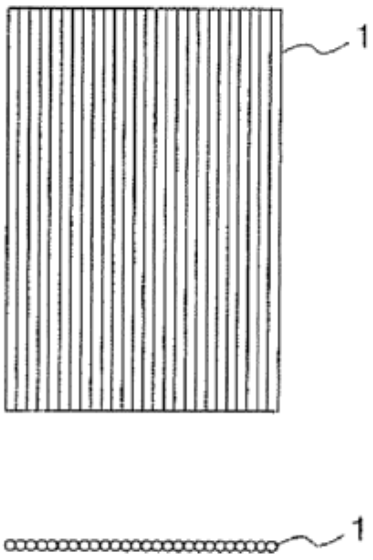

Special rules of classification

Illustrative example of subject matter classified in B29C 70/202

WO 2007/018096 PCT/JP2006/3153

[図1]

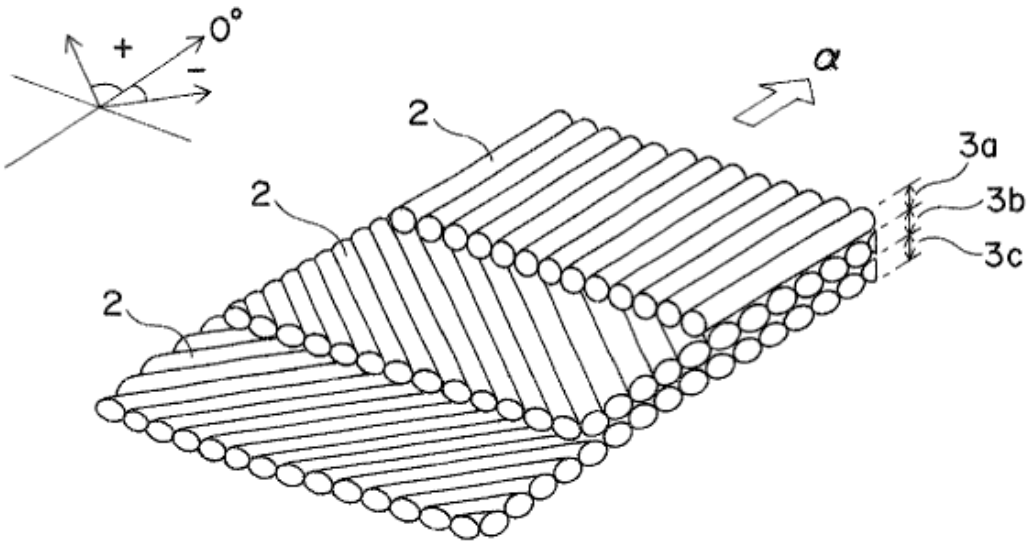

Illustrative example of subject matter classified in B29C 70/205

WO 00/37244 PCT/GB99/04293

1/3

Fig.1.

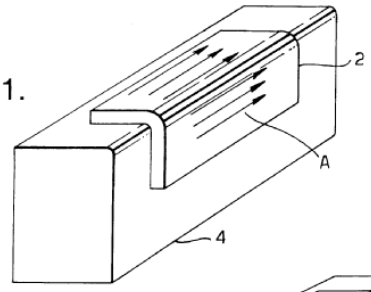

Fig.2.

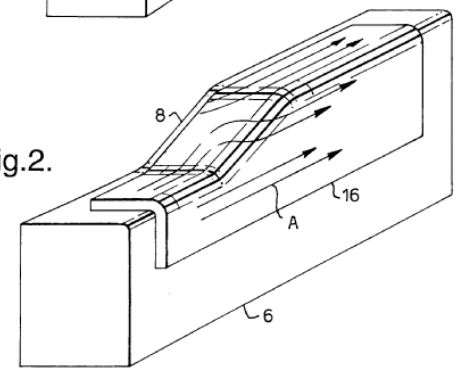

Illustrative example of subject matter classified in [B29C 70/207]

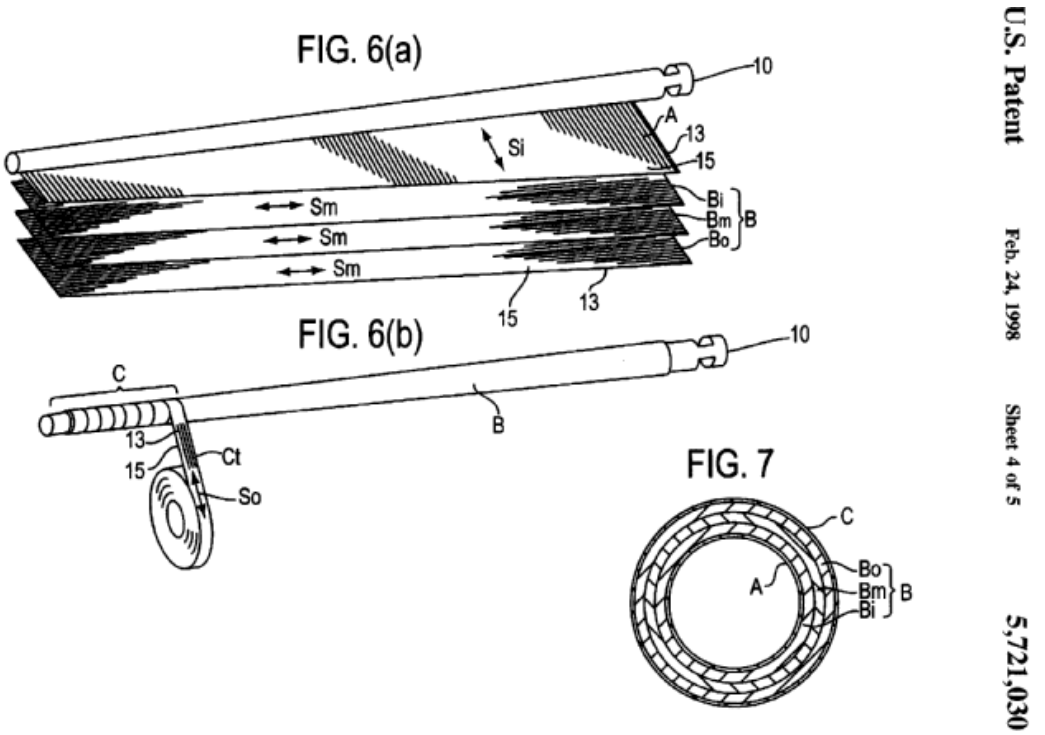

B29C 70/22

oriented in at least two directions forming a two dimensional structure {(woven fabrics per se D03D; knitted fabrics per se D04D; braid per se D04C)}

Definition statement

This place covers:

Illustrative examples of subject matter classified in this group:

Typical fabric structures:

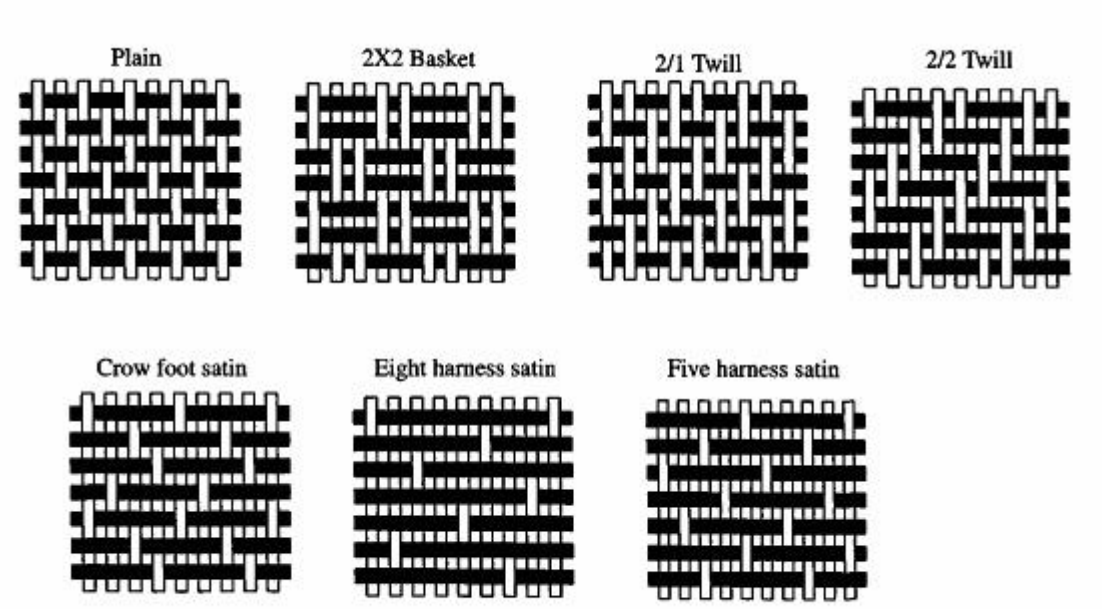

Figure 2.3 Basic weaves.

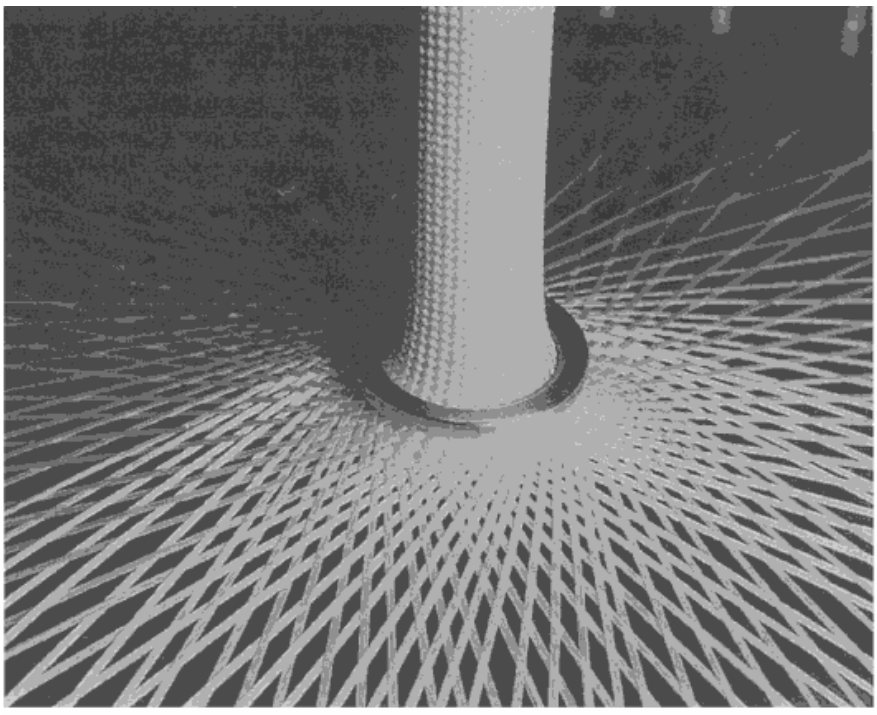

Figure 2.7 Braiding of a sleeve in progress (courtesy of Atkins & Pierce Co.).

Braid

Special rules of classification

Illustrative example of subject matter classified in B29C 70/222

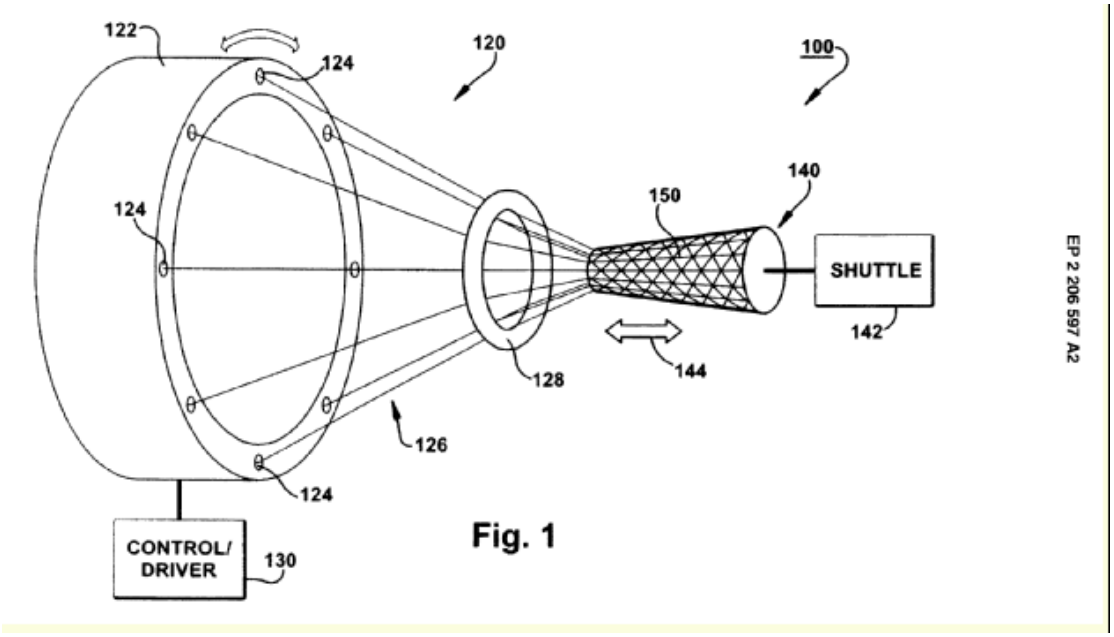

Fig. 1

Illustrative example of subject matter classified in B29C 70/224

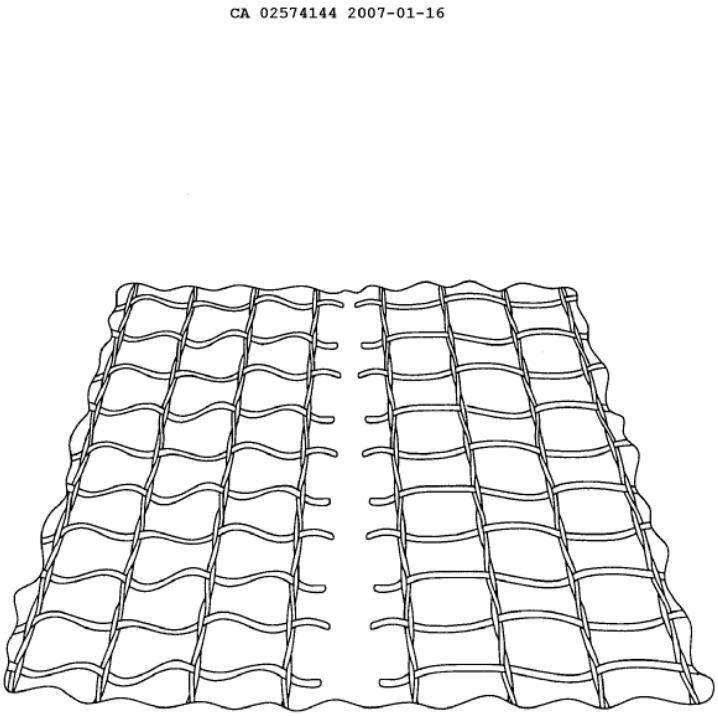

Illustrative example of subject matter classified in B29C 70/226

EP 1 125 728 A1

FIG. 3

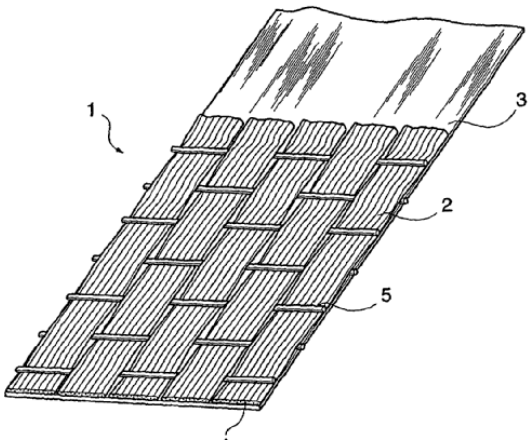

Illustrative example of subject matter classified in B29C 70/228

Patent Application Publication Oct. 5, 2006 Sheet 3 of 5 US 2006/0222837 A

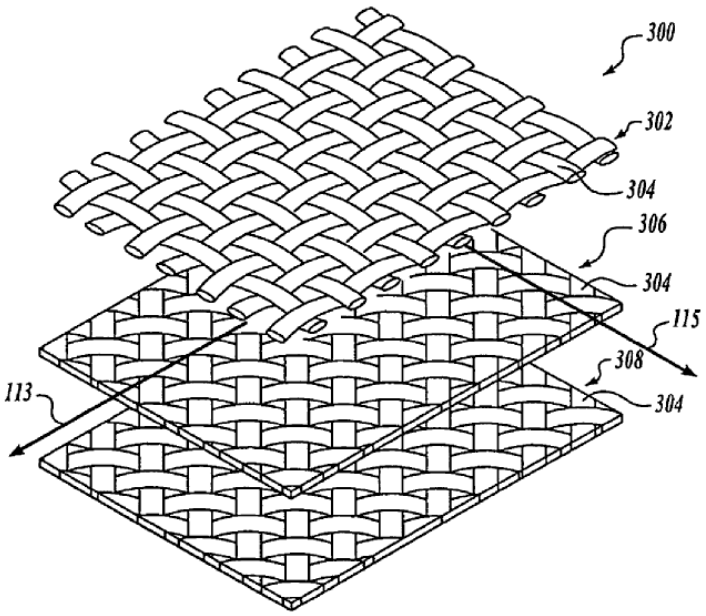

Illustrative example of subject matter classified in B29C 70/24

DE 10 2007 033 869 A1 2009.01.29

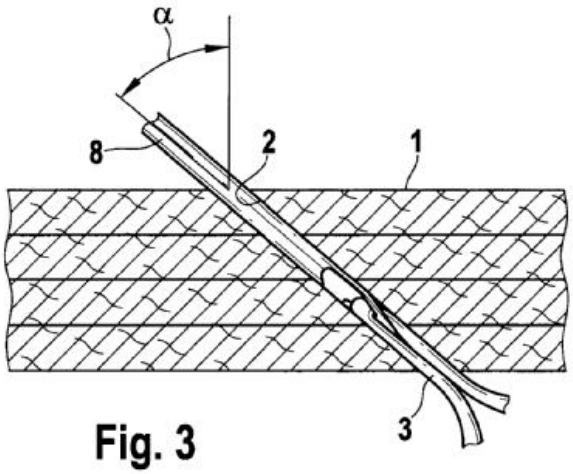

Fig. 3

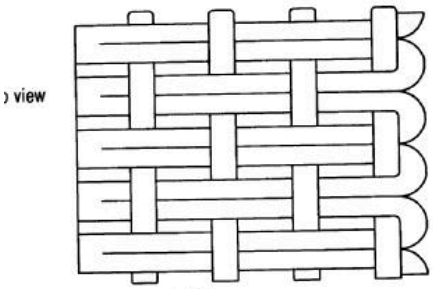

FIG. 2C

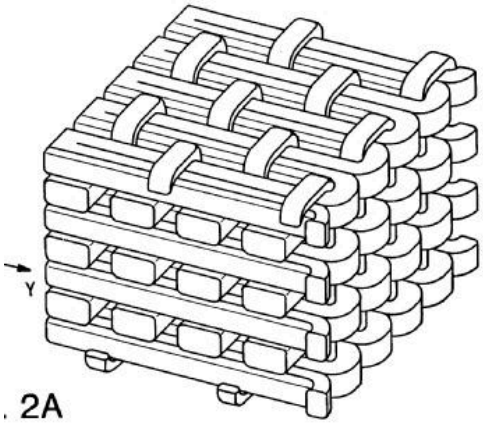

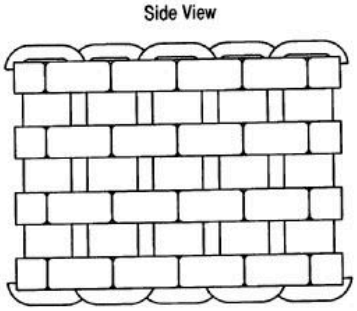

FIG. 2B

WO 01/12430

2 / 9

PCT/US00/15167

Illustrative example of subject matter classified in B29C 70/26

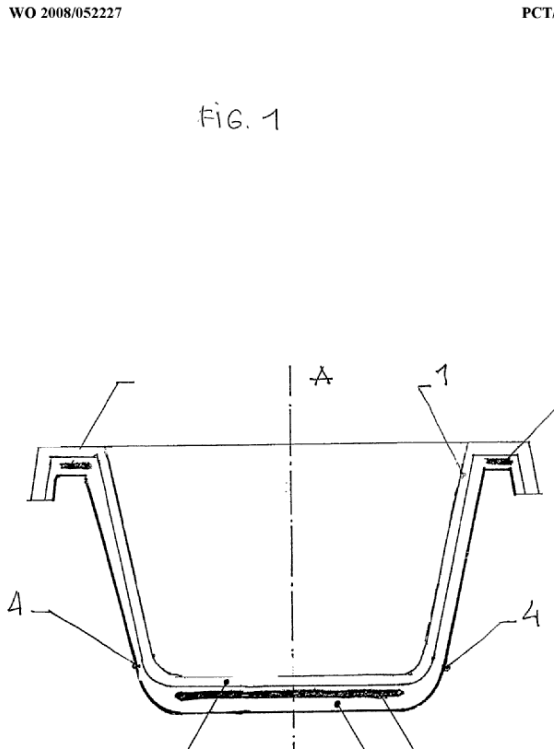

Glossary of terms

In this place, the following terms or expressions are used with the meaning indicated:

Warp	collection of fibres in a fabric in the lengthwise machine directionFill
Tex	indication of the linear weight of a roving, fibre or yarn, 1 Tex = 1 gram/kilometer
Weft or woof fibres	in the transverse direction of the warp fibres, these fibres are shot between warp fibres during the weaving process.

Synonyms and Keywords

In patent documents, the following abbreviations are often used:

Weft = Woof	Fill fibres

B29C 70/30

Shaping by lay-up, i.e. applying fibres, tape or broadsheet on a mould, former or core; Shaping by spray-up, i.e. spraying of fibres on a mould, former or core

Definition statement

This place covers:

B29C 70/30 deals with lay-up specific details. Lay-up is the positioning of reinforcements in or on a mould, former, core or substrate taking into account the anisotropy of the material.

Example: the specific lay-up in terms of sequence and or fibre orientation of fibrous reinforcing layers prior to a moulding process.

References

Application-oriented references

Examples of places where the subject matter of this place is covered when specially adapted, used for a particular purpose, or incorporated in a larger system:

Producing fibrous preforms for subsequent moulding	B29B 11/16

Informative references

Attention is drawn to the following places, which may be of interest for search:

Specific details of the moulding process	B29C 70/40 - B29C 70/56

Special rules of classification

Illustrative example of subject matter classified in B29C 70/305

FIG. 2

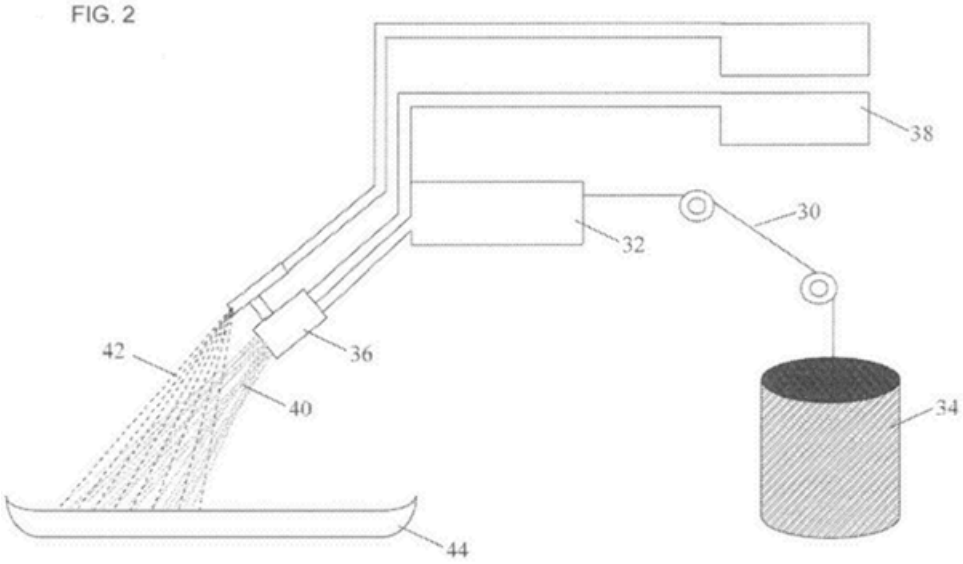

B29C 70/32

on a rotating mould, former or core

Definition statement

This place covers:

Winding of fibres reinforcements where the layup of the winding is of importance.

References

Informative references

Attention is drawn to the following places, which may be of interest for search:

Shaping by helically winding	B29C 53/58

Special rules of classification

Illustrative example of subject matter classified in B29C 70/323

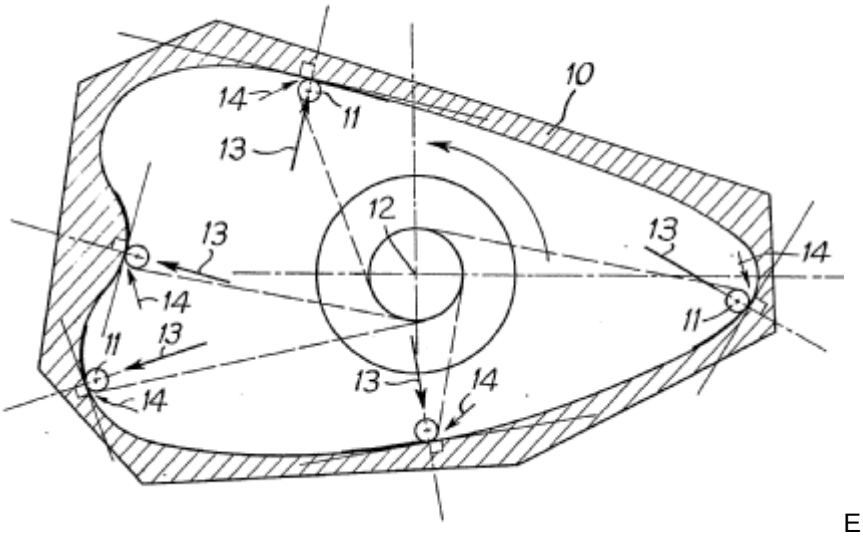

EP0198744

Illustrative example of subject matter classified in B29C 70/326

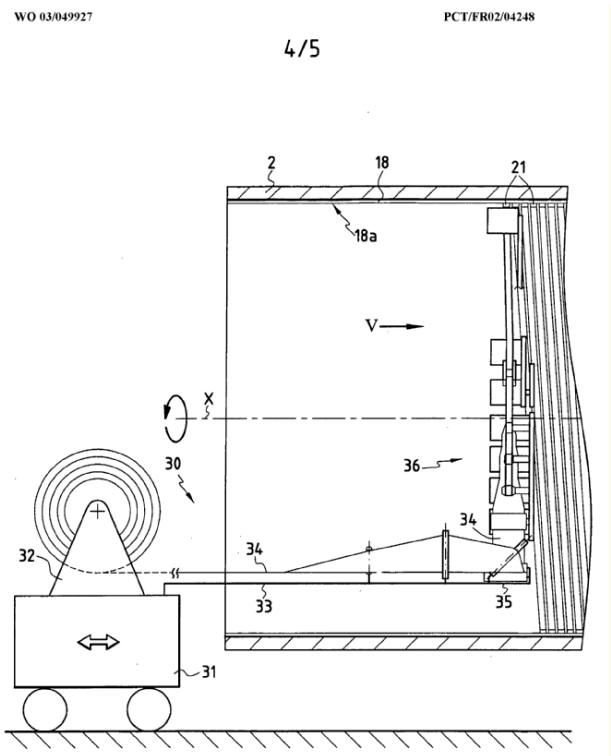

B29C 70/34

and shaping or impregnating by compression {, i.e. combined with compressing after the lay-up operation}

Definition statement

This place covers:

moulding where the layup of the reinforcements (i.e. orientation, position, fibre type) is of importance and the moulding technique has no particular relevance.

Special rules of classification

B29C 70/342

Moulding using isostatic pressing means, e.g. using vacuum bag, silicone core, expanding bags or balloons to apply moulding pressure.

B29C 70/345

moulding where the composite material is moulded by 'hard' or 'stiff' moulding surfaces (e.g. a male and a female metal mould)

Illustrative example of subject matter classified in B29C 70/347

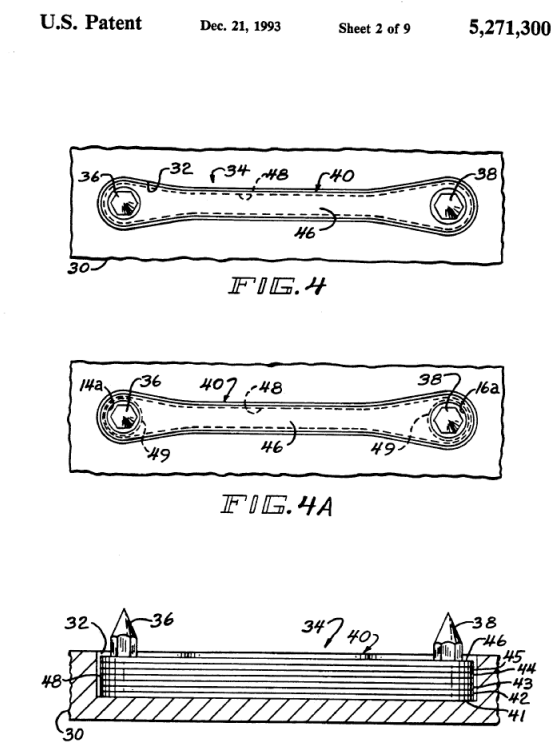

Illustrative example of subject matter classified in B29C 70/382

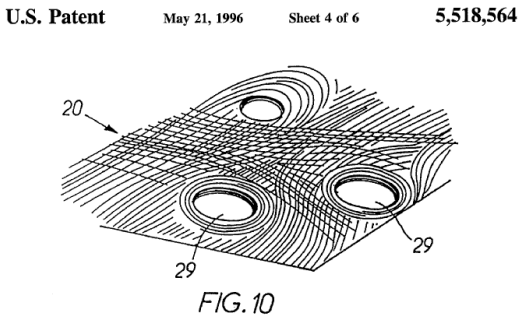

FIG. 10

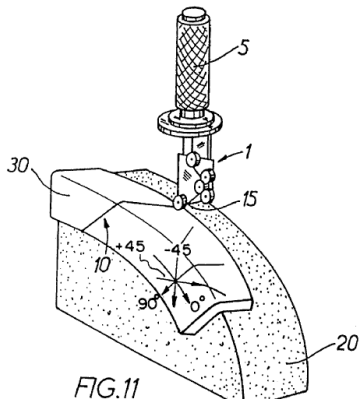

FIG.11

Illustrative example of subject matter classified in B29C 70/384

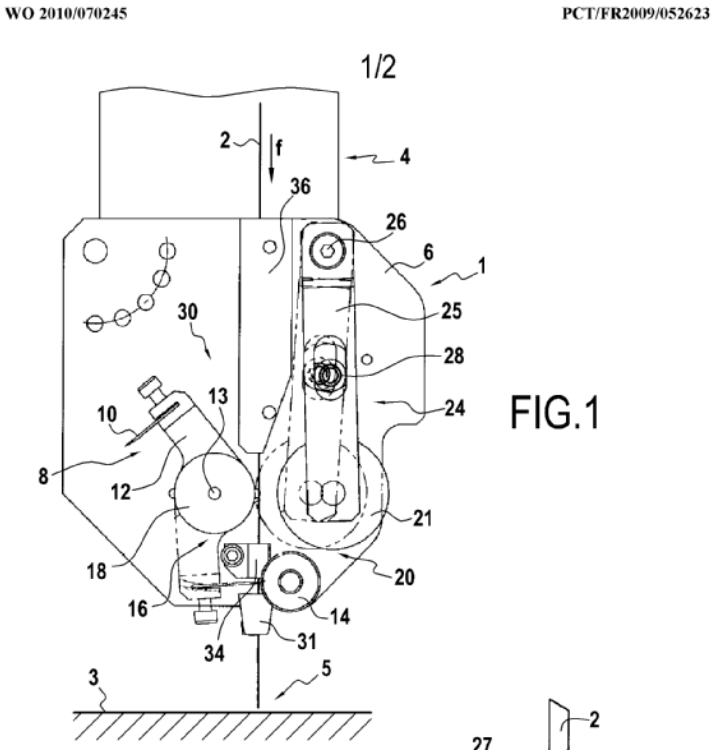

FIG.1

Illustrative example of subject matter classified in B29C 70/386

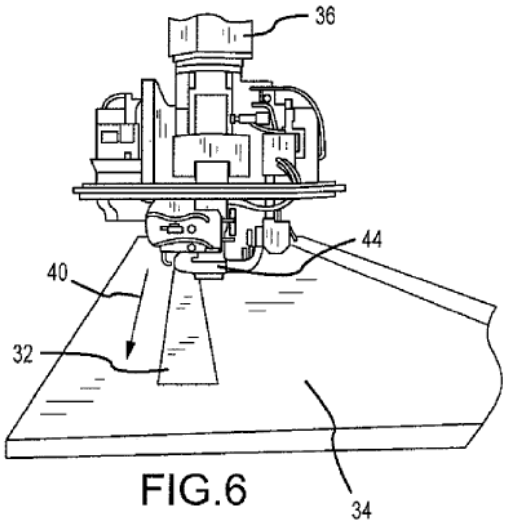

FIG.6

Illustrative example of subject matter classified in B29C 70/388

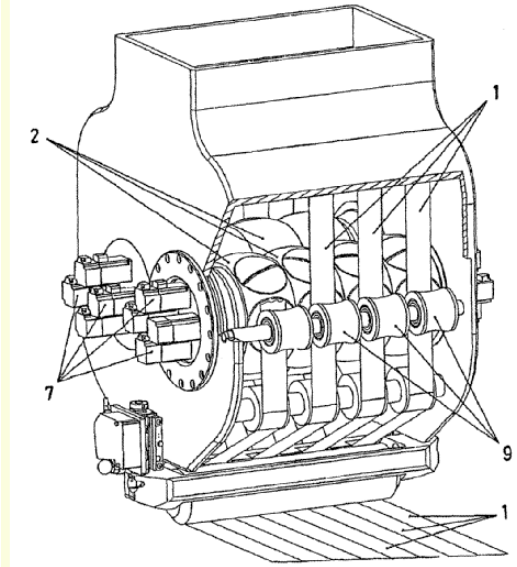

B29C 70/40

Shaping or impregnating by compression (B29C 70/34 takes precedence){not applied}

Definition statement

This place covers:

B29C 70/40 up to and including B29C 70/56 deals with moulding specific details

References

Limiting references

This place does not cover:

Lay-up specific details	B29C 70/30

B29C 70/44

using isostatic pressure, e.g. pressure difference-moulding, vacuum bag-moulding, autoclave-moulding or expanding rubber-moulding

Relationships with other classification places

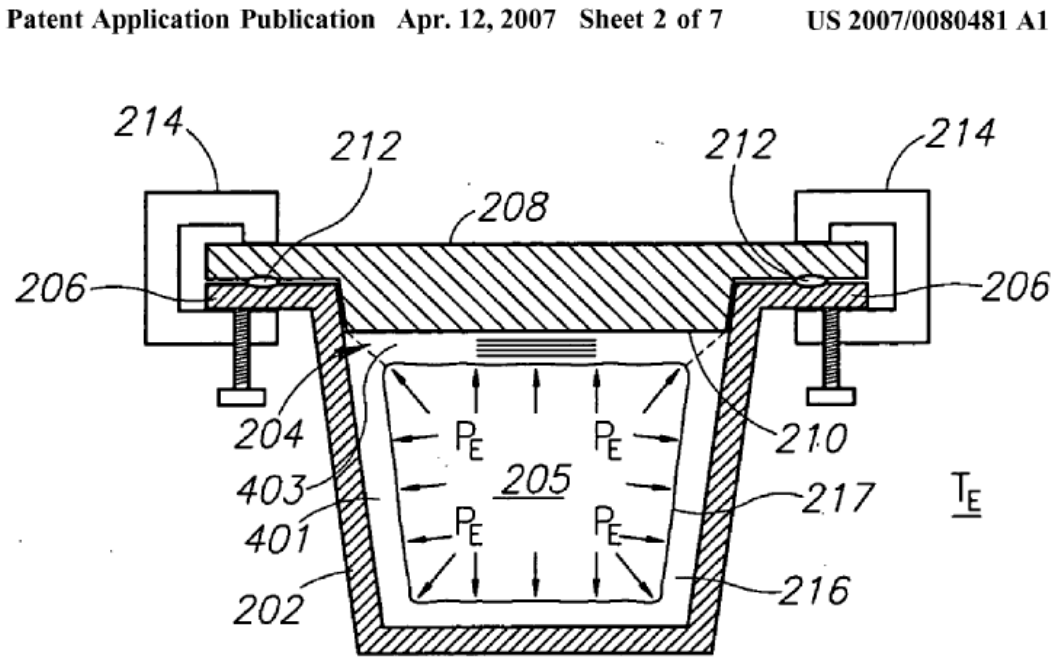

B29C 70/443

{and impregnating by vacuum or injection}

Special rules of classification

Illustrative example of subject matter classified in B29C 70/443

EP 2 149 441 A1

FIG. 4

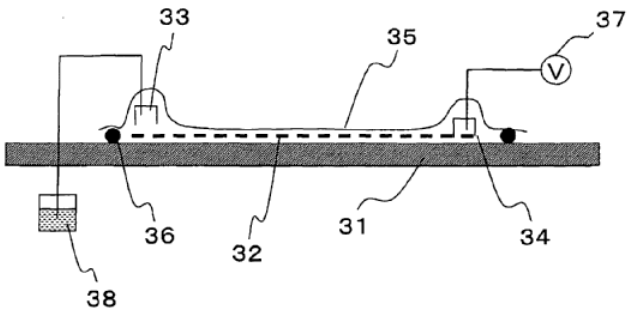

Illustrative example of subject matter classified in B29C 70/446

WO 89/04789 PCT/US88/04006

4 / 10

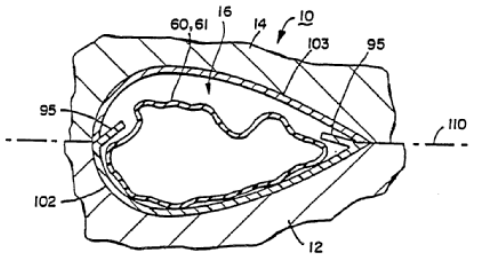

FIG 2A

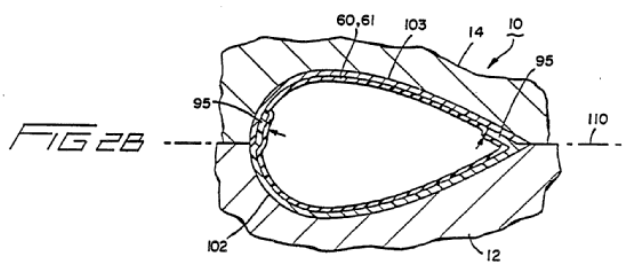

FIG 2B

Illustrative example of subject matter classified in B29C 70/46

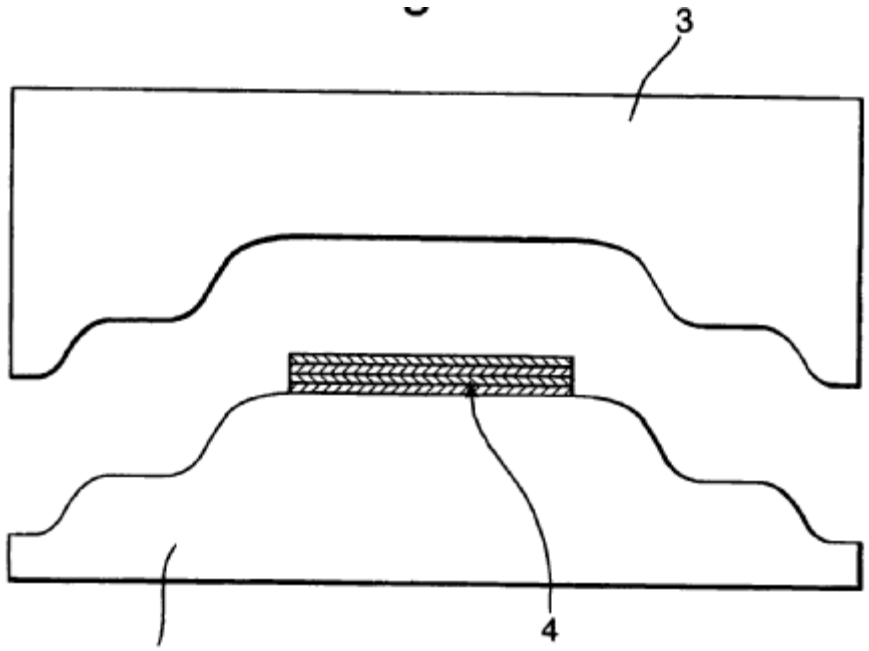

GB2453308

Illustrative example of subject matter classified in B29C 70/462

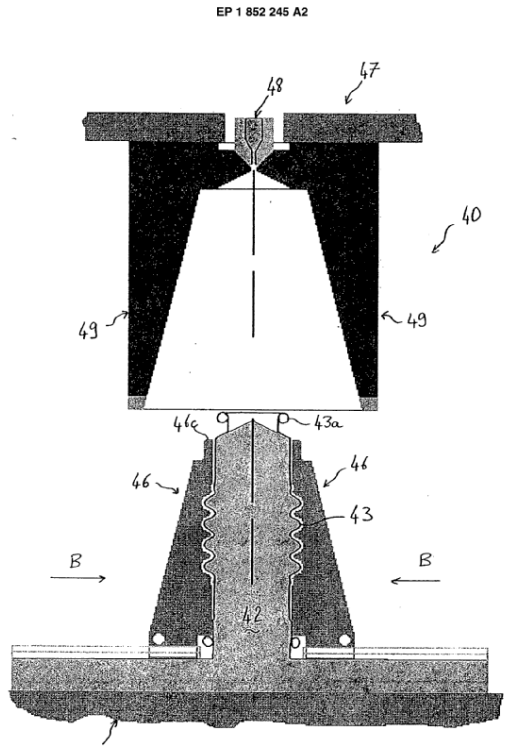

Synonyms and Keywords

In patent documents, the following abbreviations are often used:

RTM	resin transfer moulding
CIRTM	co-injection RTM

VI	vacuum infusion
DRDF	double resin infusion under flexible tooling
LRI	liquid resin infusion
MVI	modified vacuum infusion
RFI	resin film infusion
RIRM	resin injection recirculation moulding
SCRIMP	Seeman Composites Resin Infusion Moulding Process
VAIM	vacuum assisted injection moulding
VAP	vacuum assisted processing
VARI	vacuum assisted resin injection system
VARIM	vacuum assisted resin injection moulding
V(A)RTM	vacuum (assisted) resin transfer moulding
VIM	vacuum infusion moulding
VIMP	vacuum infusion moulding process
VM/RTM light	a hybrid RIFT/RTM
VIP	vacuum infusion process

B29C 70/465

{and impregnating by melting a solid material, e.g. sheets, powders of fibres}

References

Informative references

Attention is drawn to the following places, which may be of interest for search:

Impregnating per se	B29B 15/105 - B29B 15/14
Vitreous materials in general	D21H 13/40

Special rules of classification

Illustrative example of subject matter classified in **B29C79/46B**:

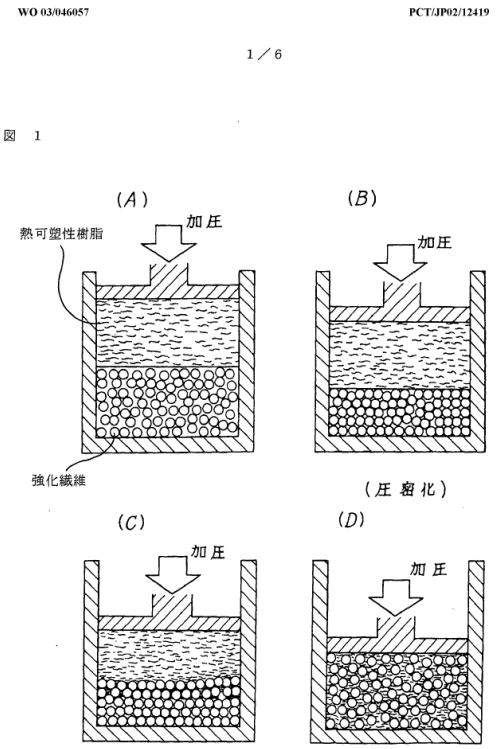

B29C 70/467

{and impregnating the reinforcements during mould closing (B29C 70/465 takes precedence)}

References

Informative references

Attention is drawn to the following places, which may be of interest for search:

Impregnating of fibrous material per se	B29B 15/105 - B29B 15/14

Special rules of classification

Illustrative example of subject matter classified in **B29C79/46C**:

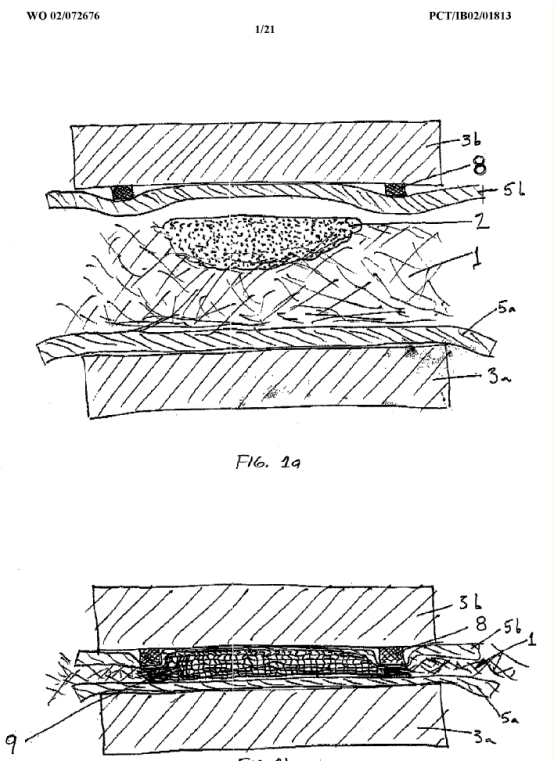

B29C 70/48

and impregnating the reinforcements in the closed mould, e.g. resin transfer moulding [RTM] {, e.g. by vacuum}

References

Informative references

Attention is drawn to the following places, which may be of interest for search:

Impregnating of fibrous reinforcement per se	B29B 15/105 - B29B 15/14

Special rules of classification

Illustrative example of subject matter classified in **B29C79/48**:

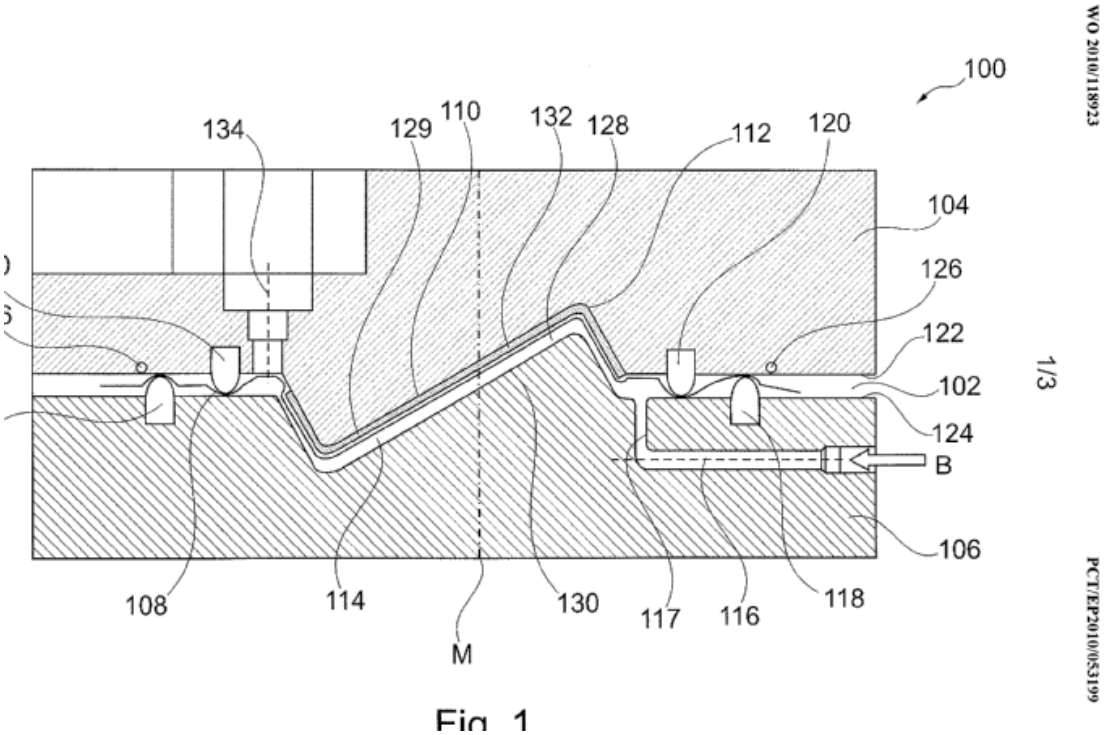

Fig. 1

B29C 70/50

for producing articles of indefinite length, e.g. prepregs, sheet moulding compounds [SMC] or cross moulding compounds [XMC]

Special rules of classification

Illustrative example of subject matter classified in **B29C79/50**:

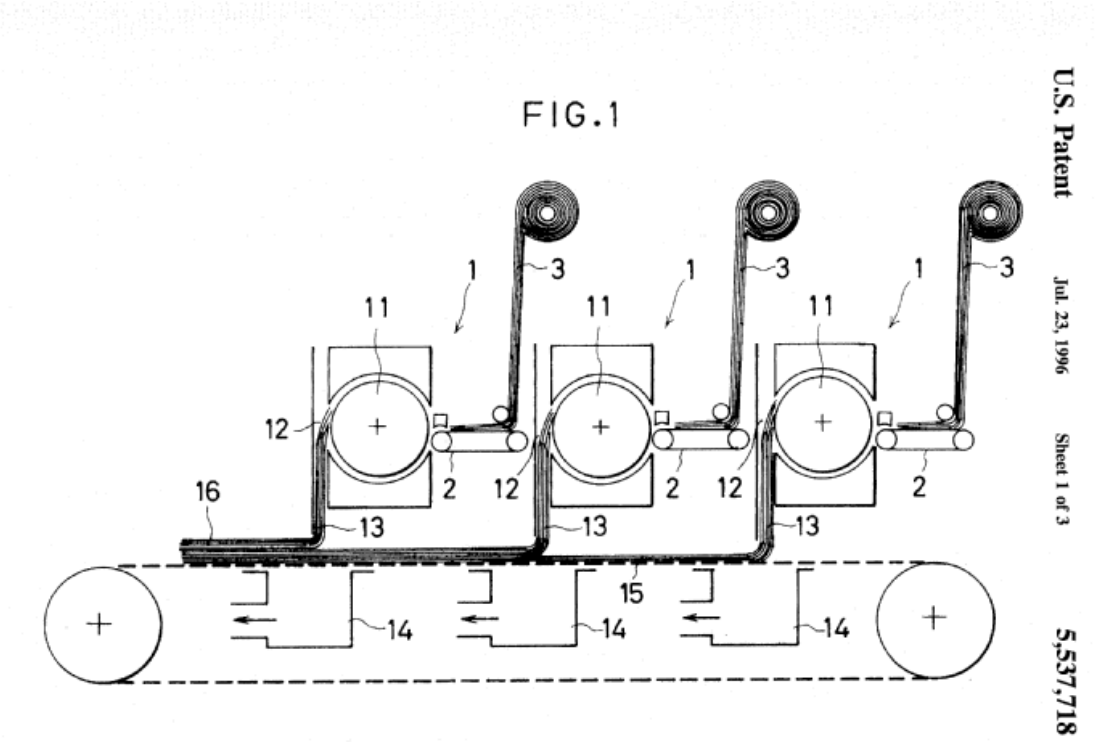

Illustrative example of subject matter classified in B29C 70/502:

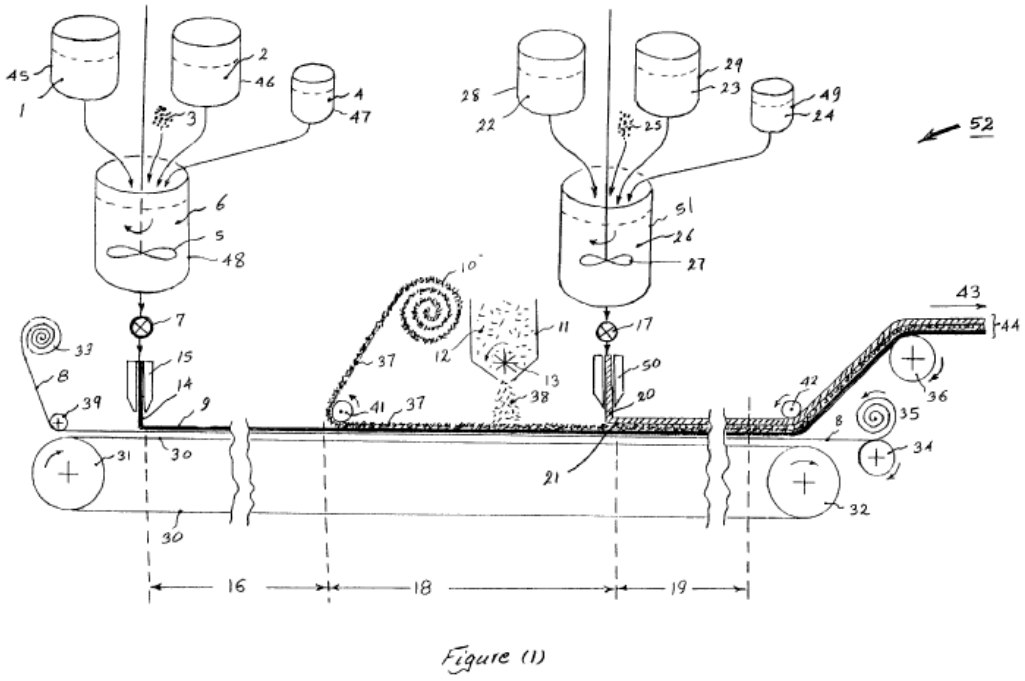

Figure (1)

U.S. Patent Dec. 24, 2002 Sheet 1 of 5 US 6,497,833 B1

Illustrative example of subject matter classified in B29C 70/504:

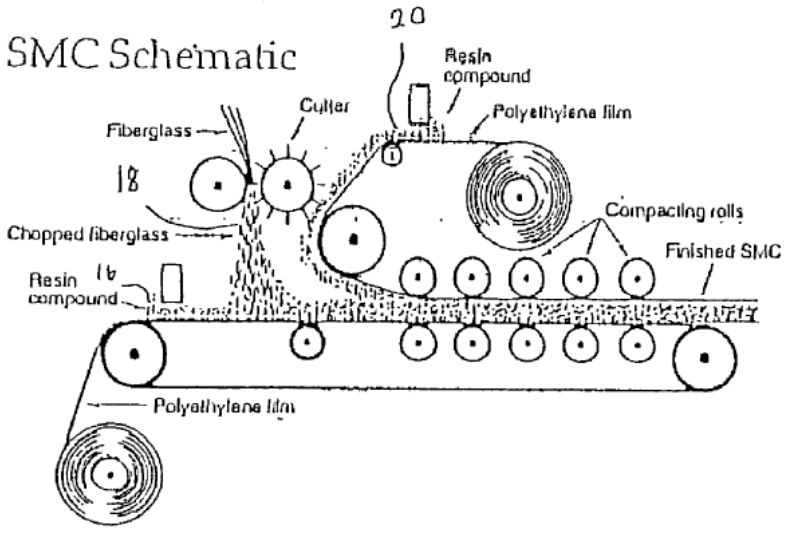

FIG. 2

ation Publication May 1, 2003 Sheet 2 of 2 US 2003/0083414 A1

B29C 70/506

{and impregnating by melting a solid material, e.g. sheet, powder, fibres (B29C 70/508 takes precedence)}

References

Limiting references

This place does not cover:

Pulp or paper, comprising vitreous materials	D21H 13/40

B29C 70/52

Pultrusion, i.e. forming and compressing by continuously pulling through a die

Definition statement

This place covers:

Continuous fibres or fibrous structures are pulled with matrix material through a die.

References

Limiting references

This place does not cover:

Extrusion moulding compounds comprising short fibres which are pressed through a die	B29C 48/0011

Special rules of classification

Illustrative example of subject matter classified in B29C 70/521:

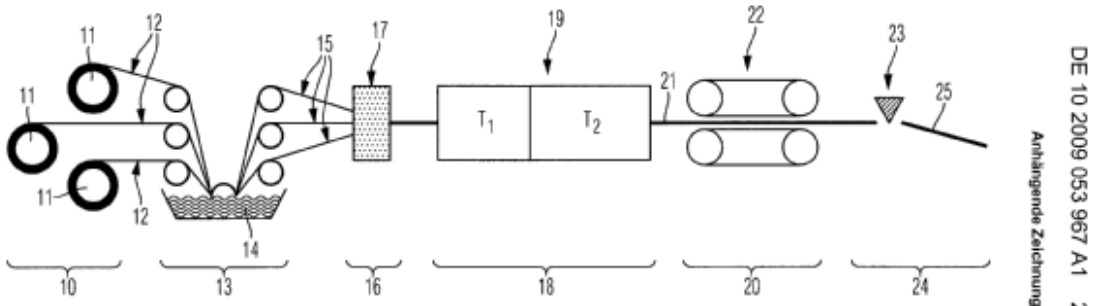

Fig. 1
Stand der Technik

Illustrative example of subject matter classified in B29C 70/522:

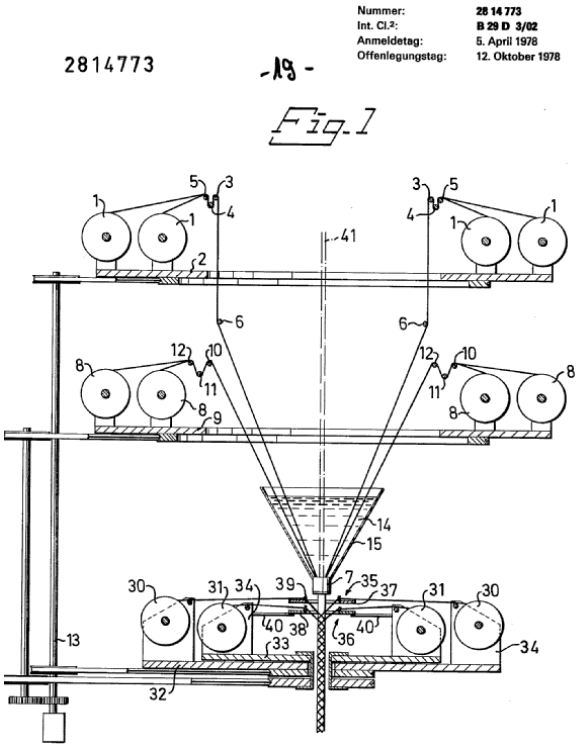

B29C 70/523

{and impregnating the reinforcement in the die}

References

Informative references

Attention is drawn to the following places, which may be of interest for search:

Impregnating per se	B29B 15/14 - B29B 15/105

Special rules of classification

Illustrative example of subject matter classified in this group:

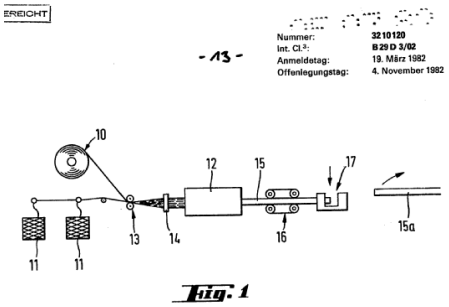

Fig. 1

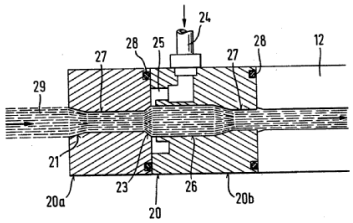

Fig. 2

Illustrative example of subject matter classified in B29C 70/524:

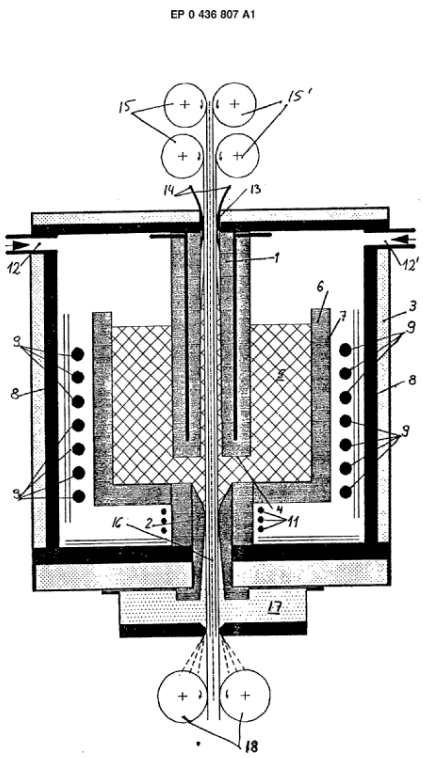

Illustrative example of subject matter classified in B29C 70/526:

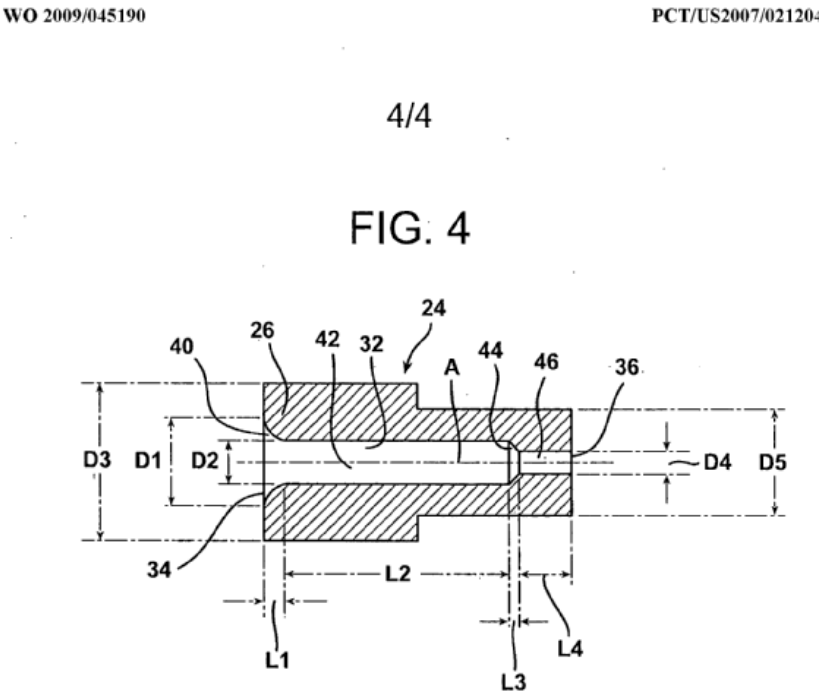

Illustrative example of subject matter classified in B29C 70/527:

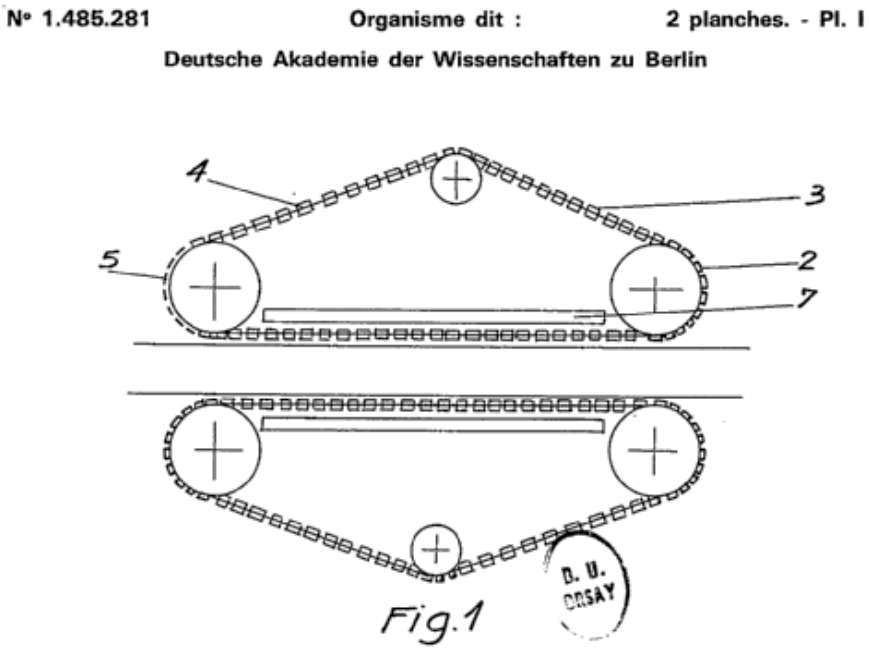

B29C 70/528

{Heating or cooling}

References

Informative references

Attention is drawn to the following places, which may be of interest for search:

Heating, cooling during moulding in general	B29C 35/00

B29C 70/54

Component parts, details or accessories; Auxiliary operations {, e.g. feeding or storage of prepregs or SMC after impregnation or during ageing}

Definition statement

This place covers:

All details and auxiliary operations related to shaping of composites consisting of reinforcements only, e.g. sensing means to control curing, impregnation, positioning reinforcements in a mould, perforating, cutting or machining during or after moulding.

References

Informative references

Attention is drawn to the following places, which may be of interest for search:

Releasing articles from moulds or removal of cores	B29C 33/44 - B29C 33/54
Heating and curing during moulding in general	B29C 35/00
Using release agents	B29C 37/0067
Pre-treatment, e.g. impregnation, of reinforcements	B29B 15/08
Testing	G01N

Special rules of classification

Illustrative example of subject matter classified in B29C 70/541:

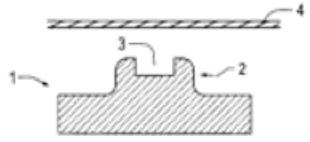

Fig. 1

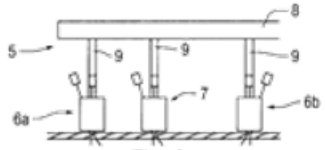

Fig. 2

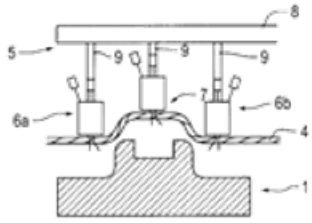

Fig. 3

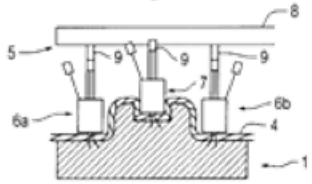

Fig. 4

Illustrative example of subject matter classified in B29C 70/542:

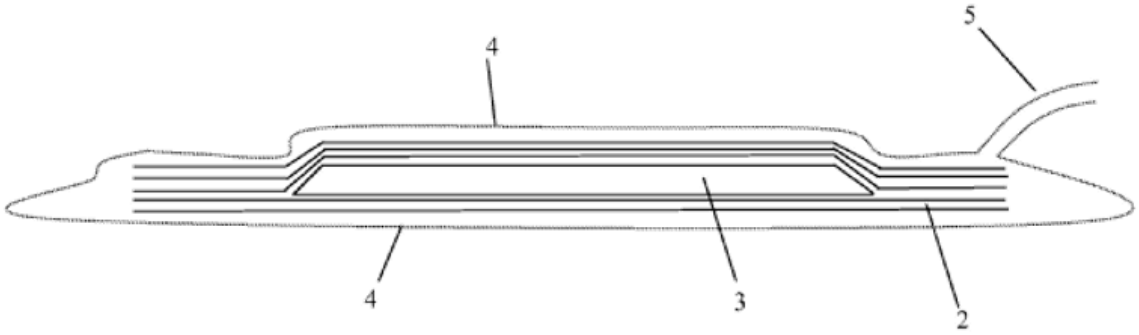

B29C 70/543

Documents that teach, e.g. local stitching, bonding, or curing to avoid fibrous reinforcement from misaligning during moulding belong here.

B29C 70/545

If a document teaches mechanical post treatment that would be obvious to one of ordinary skill in the art, such as deburring, sanding or removal of mould flash, the document should not be classified here. A document should be classified here only if the process teaches treatment that is not obvious to one

of ordinary skill in the art, and is taught as part of the invention or as indispensable for the moulding method presented.

B29C 70/546

{Measures for feeding or distributing the matrix material in the reinforcing structure}

Definition statement

This place covers:

methods to improve impregnation of fibrous material, e.g. by modifying surface tension or viscosity of moulding materials (e.g. by heating) and thereby reducing void content of the moulded composite material

References

Informative references

Attention is drawn to the following places, which may be of interest for search:

Impregnating of fibrous material per se	B29B 15/105 - B29B 15/14

Special rules of classification

Illustrative example of subject matter classified in B29C 70/547:

After curing of the resin, the channels remain in the product.

Porous layers can be peeled off if they are separated from the product by a peel ply or perforated film.

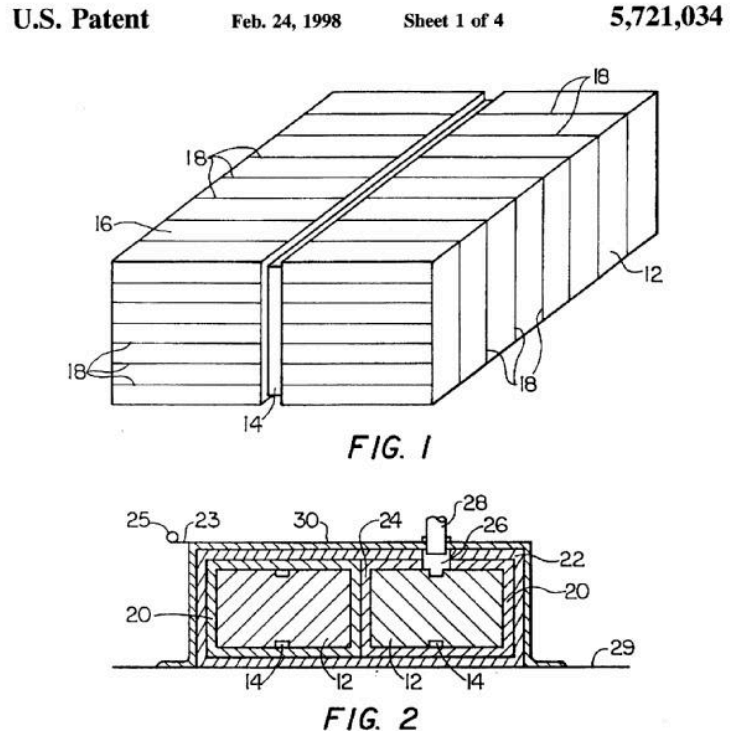

Illustrative example of subject matter classified in B29C 70/548:

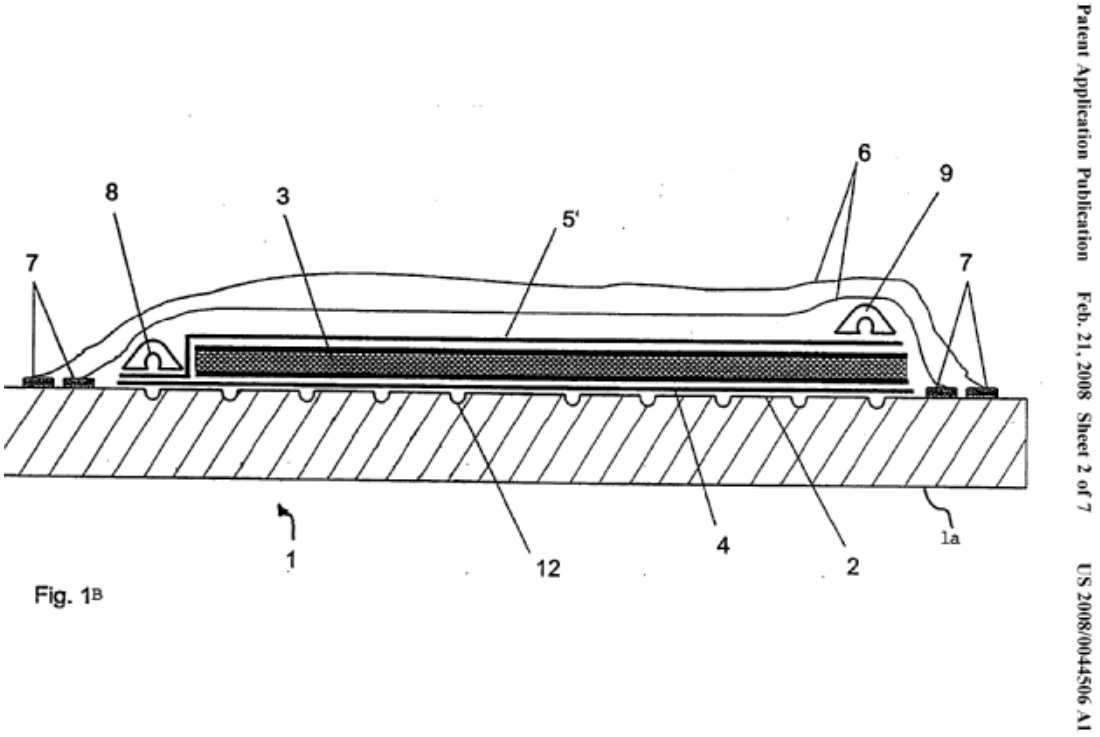

Fig. 1B

B29C 70/56

Tensioning reinforcements before or during shaping

Definition statement

This place covers:

Methods and apparatuses to apply tension on fibrous reinforcement before or during moulding. Fibrous reinforcements in their dry state are often crimped (not straight) and mechanical properties (tensile and compressive strength and modulus) suffer. Predominantly used to improve the straightness of fibres and thereby impart improved mechanical properties.

B29C 70/58

comprising fillers only {, e.g. particles, powder, beads, flakes, spheres (B29C 70/025 takes precedence, agglomerating hollow spheres to produce synthetic foam B29C 70/66; compounding ingredients per se C08K)}

References

Informative references

Attention is drawn to the following places, which may be of interest for search:

Moulds from resin bonded particles	B29C 33/3807

Special rules of classification

Illustrative example of subject matter classified in B29C 70/585:

FIG. 2

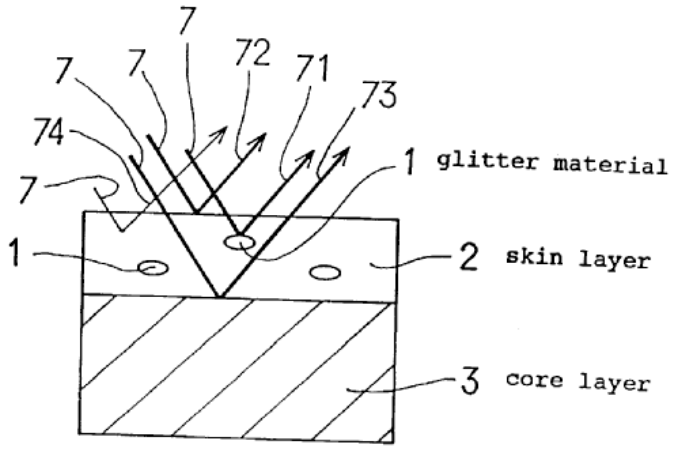

Illustrative example of subject matter classified in B29C 70/60:

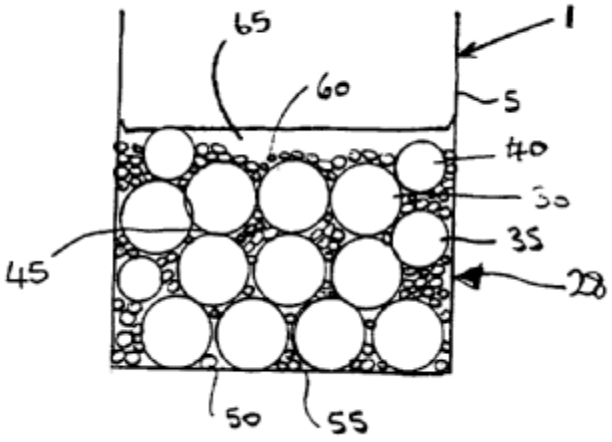

EP11003063

Illustrative example of subject matter classified in B29C 70/603:

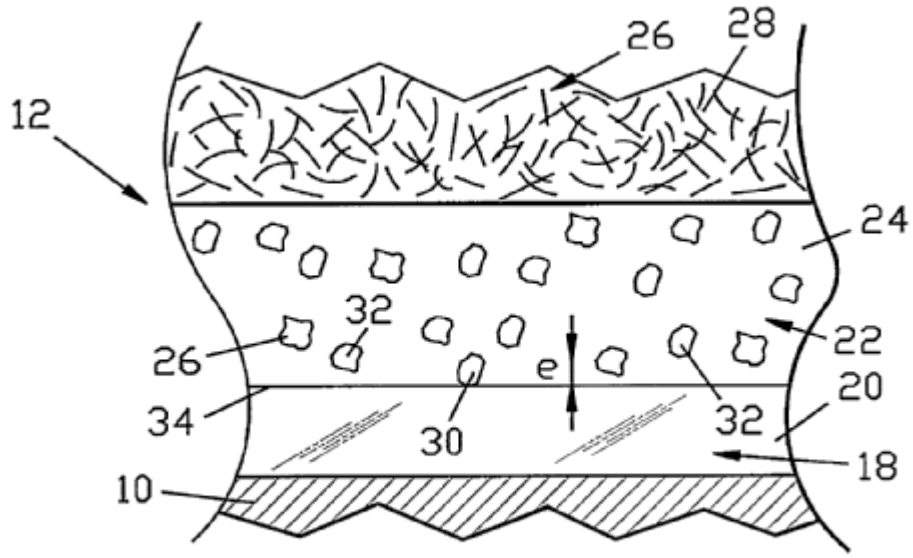

FR2703623

Illustrative example of subject matter classified in B29C 70/606:

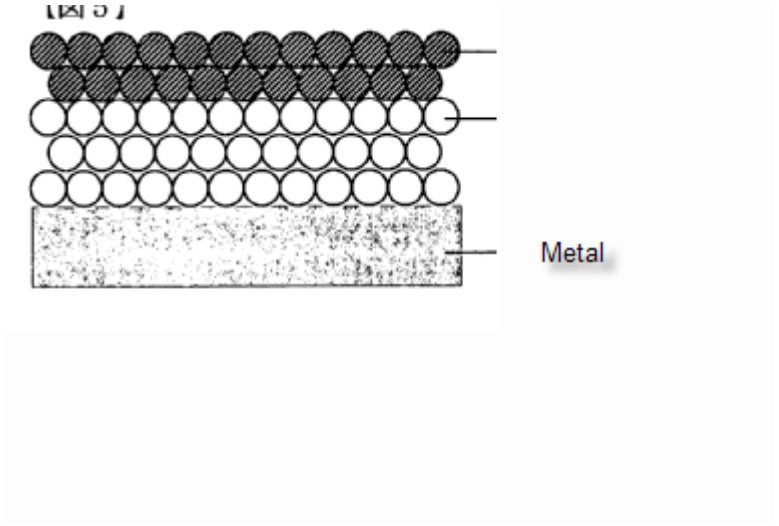

Illustrative example of subject matter classified in B29C 70/62:

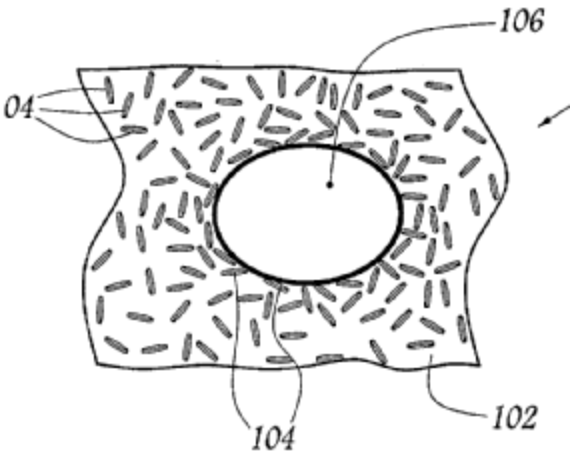

FR2850634

Illustrative example of subject matter classified in B29C 70/64:

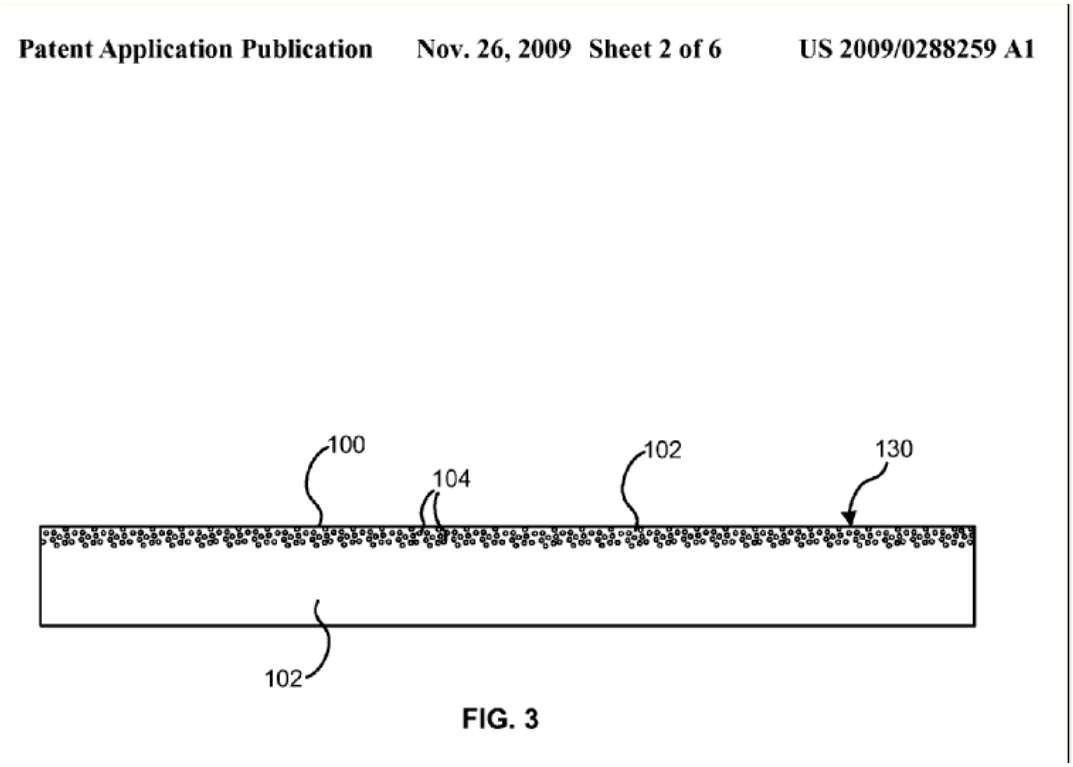

B29C 70/66

the filler comprising hollow constituents, e.g. syntactic foam

References

Informative references

Attention is drawn to the following places, which may be of interest for search:

Making or treating expandable particles	B29C 44/3461

Special rules of classification

Illustrative example of subject matter classified in B29C 70/66:

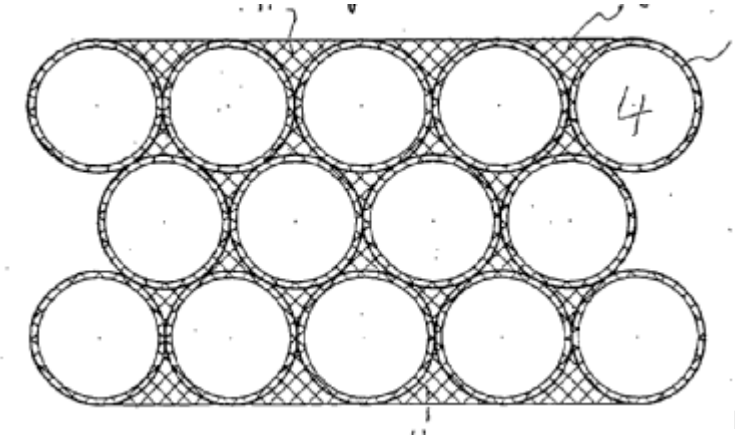

EP1502726 EP

B29C 70/68

by incorporating or moulding on preformed parts, e.g. inserts or layers {, e.g. foam blocks (mould constructions therefor B29C 33/12; joining preformed parts by moulding B29C 65/70)}

Relationships with other classification places

Positioning inserts in moulds	B29C 33/12 - B29C 33/18
Casting around inserts	B29C 39/18
Coating a mould with inserts	B29C 41/30
Compression moulding with inserts	B29C 43/18
Foaming with inserts	B29C 44/12 - B29C 44/16
Injection moulding with inserts	B29C 45/14
Extrusion moulding with inserts	B29C 48/15
Blow moulding with labels	B29C 49/24 - B29C 49/26

B29C 70/682

{Preformed parts characterised by their structure, e.g. form}

References

Informative references

Attention is drawn to the following places, which may be of interest for search:

Measures or configurations for obtaining anchoring effects in the contact areas between layers by mechanical anchoring	B29C 37/0078
Measures or configurations for obtaining anchoring effects in the contact areas between layers by means of openings in the layers	B29C 37/0082

Special rules of classification

B29C 70/683

Mainly to improve bonding with the plastic material in which it is embedded

Illustrative example of subject matter classified in B29C 70/685:

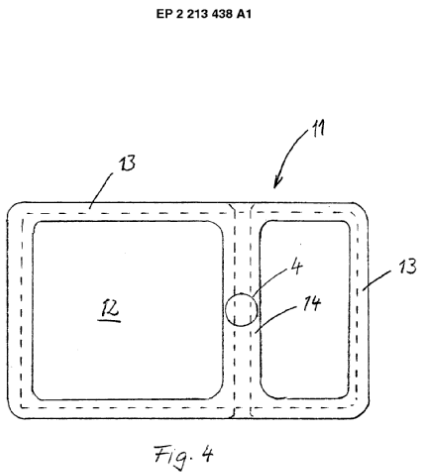

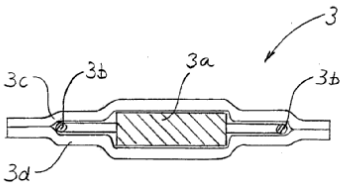

Illustrative example of subject matter classified in B29C 70/686:

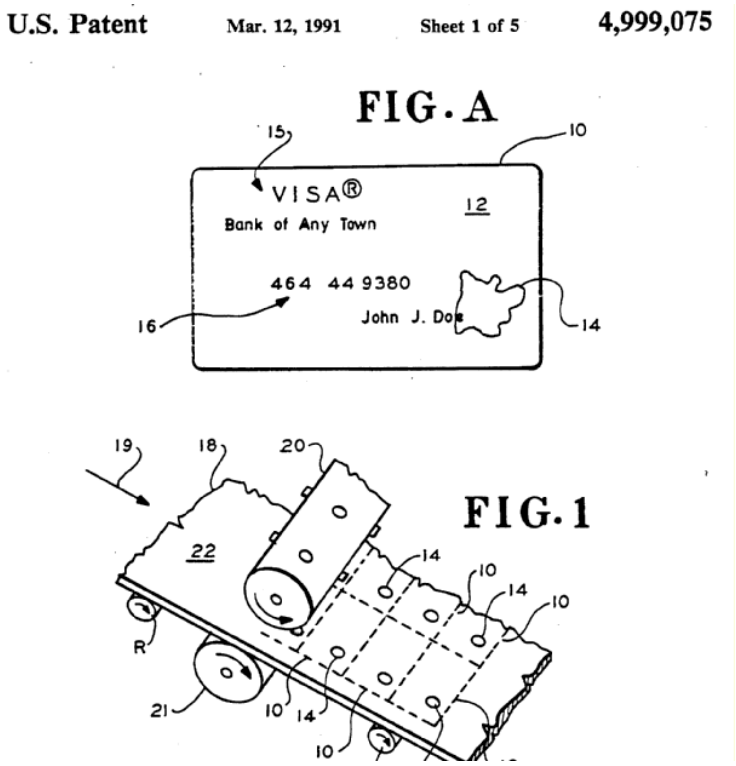

Illustrative example of subject matter classified in B29C 70/687:

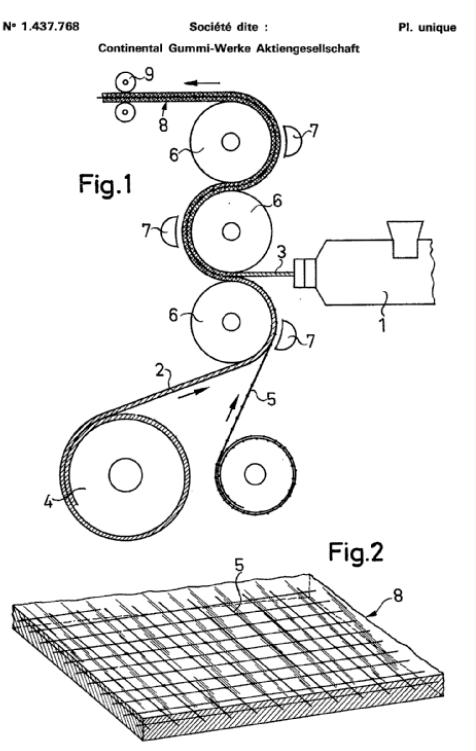

Illustrative example of subject matter classified in B29C 70/688:

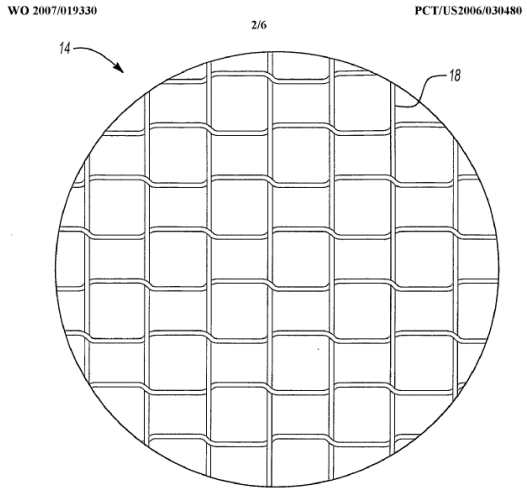

Fig-3

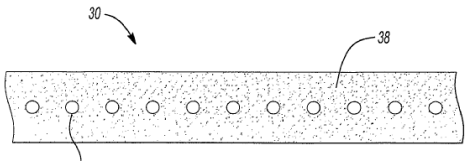

B29C 70/70

Completely encapsulating inserts {(B29C 70/86 takes precedence)}

References

Limiting references

This place does not cover:

Reinforced encapsulating material (e.g. by fibres)	B29C 70/865

Informative references

Attention is drawn to the following places, which may be of interest for search:

Joining by foaming:	B29C 44/1223- B29C 44/1247

Special rules of classification

Illustrative example of subject matter classified in B29C 70/70:

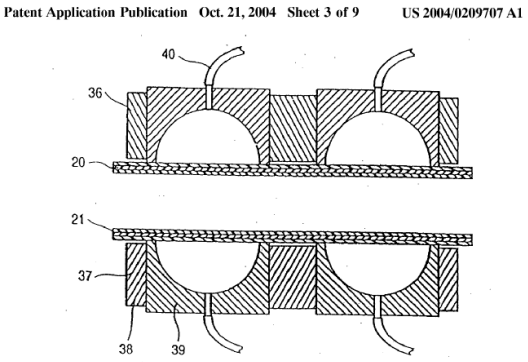

Fig. 5

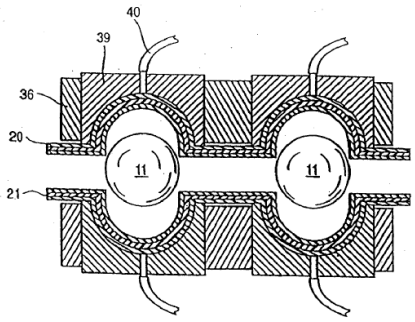

Illustrative example of subject matter classified in B29C 70/72:

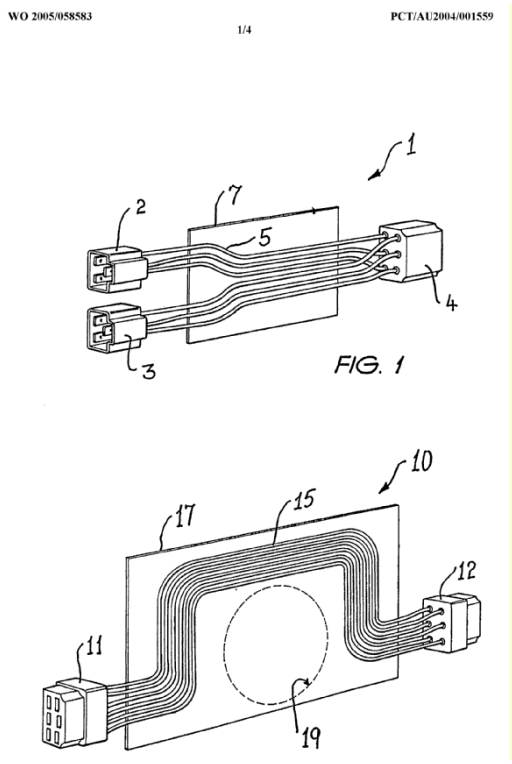

Illustrative example of subject matter classified in B29C 70/74:

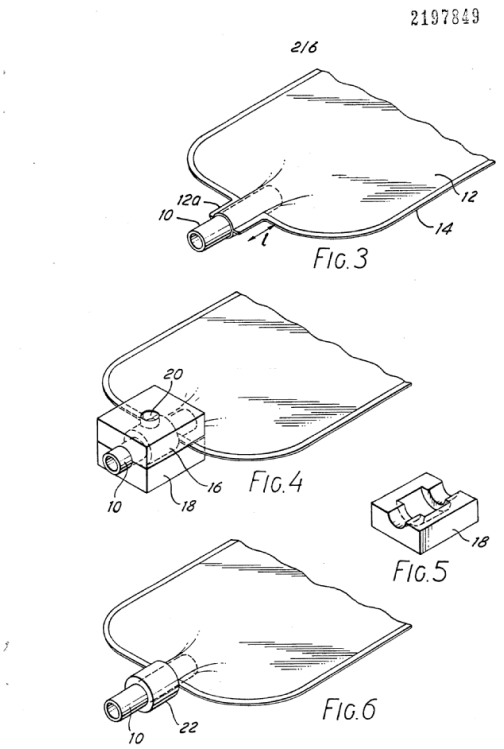

GB2197849

Illustrative example of subject matter classified in B29C 70/742:

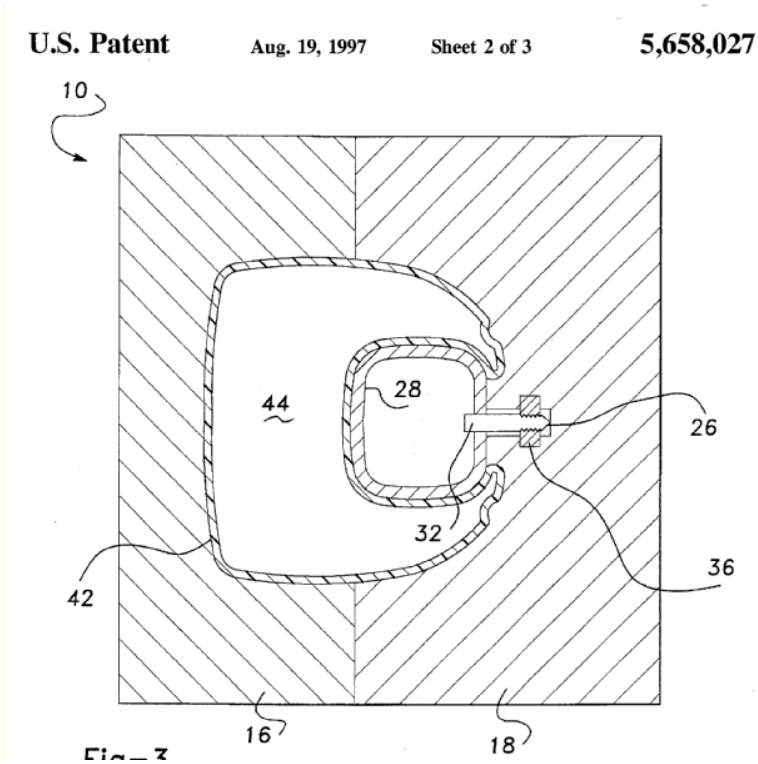

Illustrative example of subject matter classified in B29C 70/745:

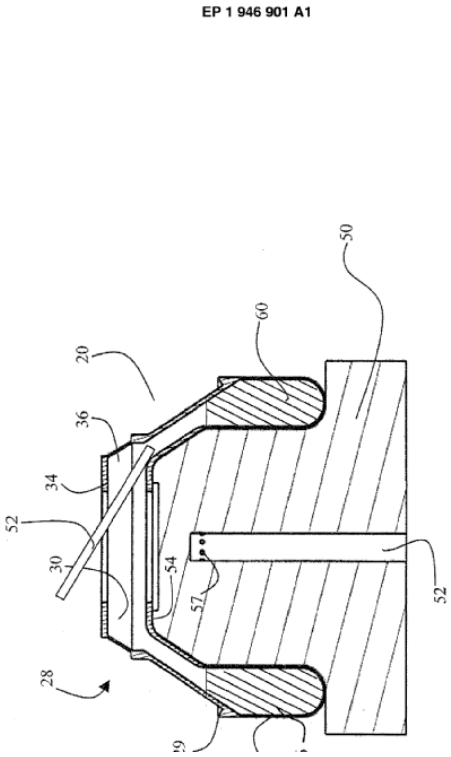

Illustrative example of subject matter classified in B29C 70/747:

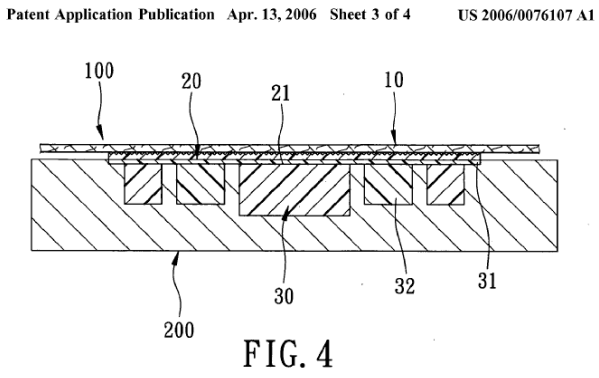

FIG. 4

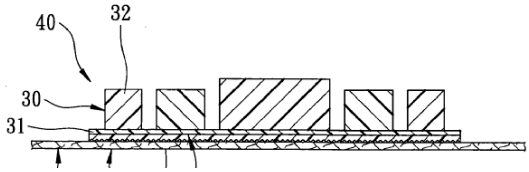

Illustrative example of subject matter classified in B29C 70/763:

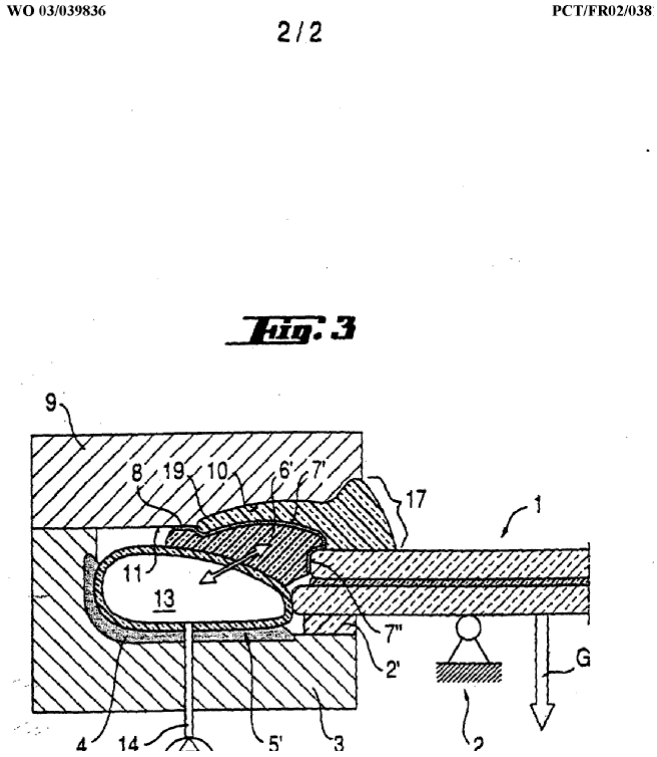

Illustrative example of subject matter classified in B29C 70/766:

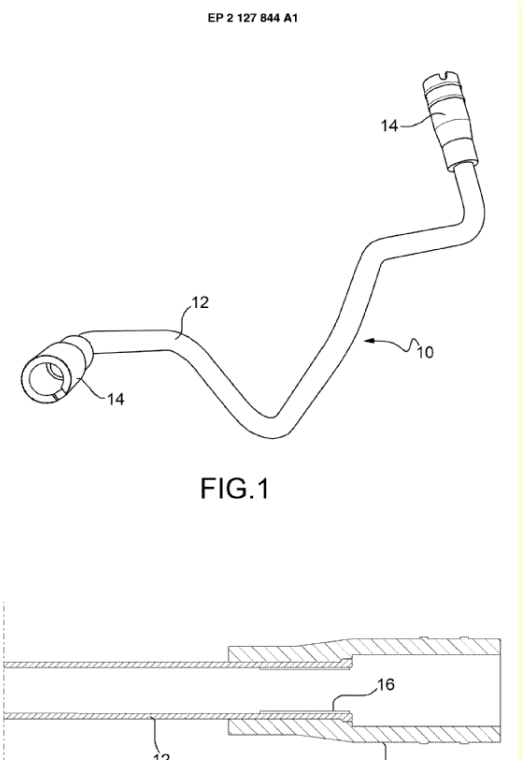

FIG.1

Illustrative example of subject matter classified in B29C 70/78:

EP 0 600 187 A1

FIG. 6B

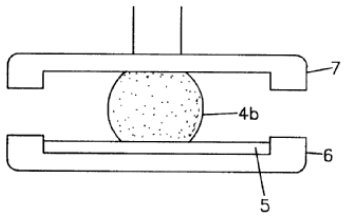

FIG. 7B

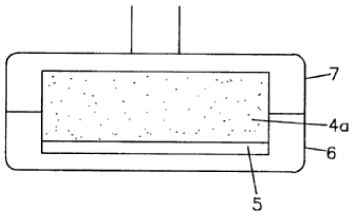

Illustrative example of subject matter classified in B29C 70/80:

0021691

1/2

Fig. 1

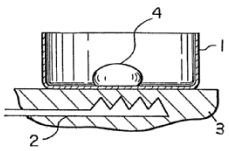

Fig. 2

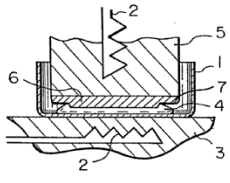

Fig. 3

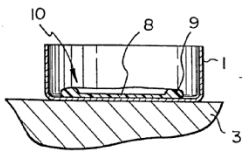

EP0021691

Illustrative example of subject matter classified in B29C 70/82:

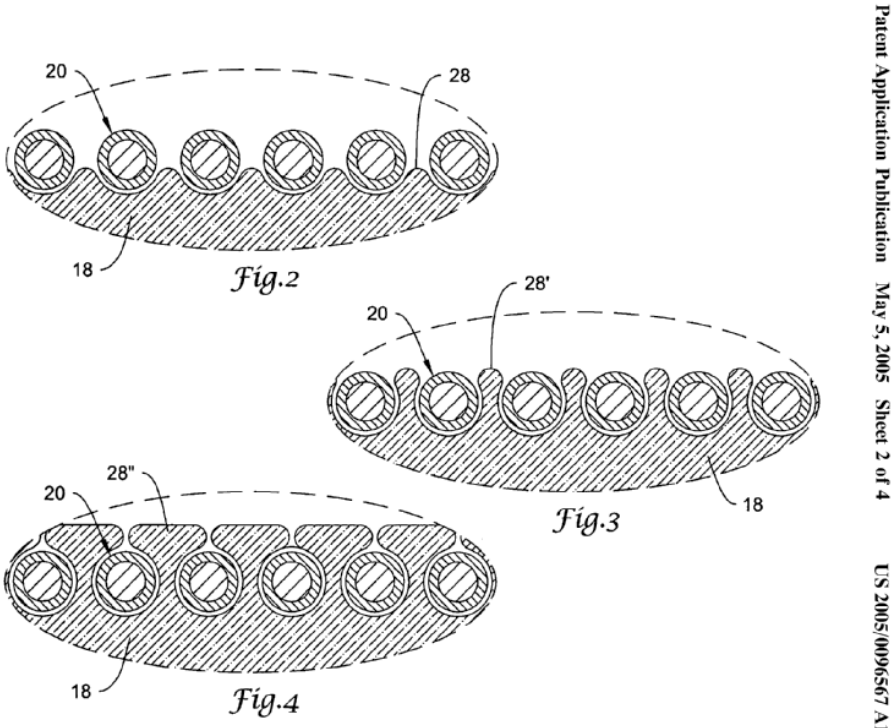

Patent Application Publication May 5, 2005 Sheet 2 of 4 US 2005/0096567 A1

Illustrative example of subject matter classified in B29C 70/84:

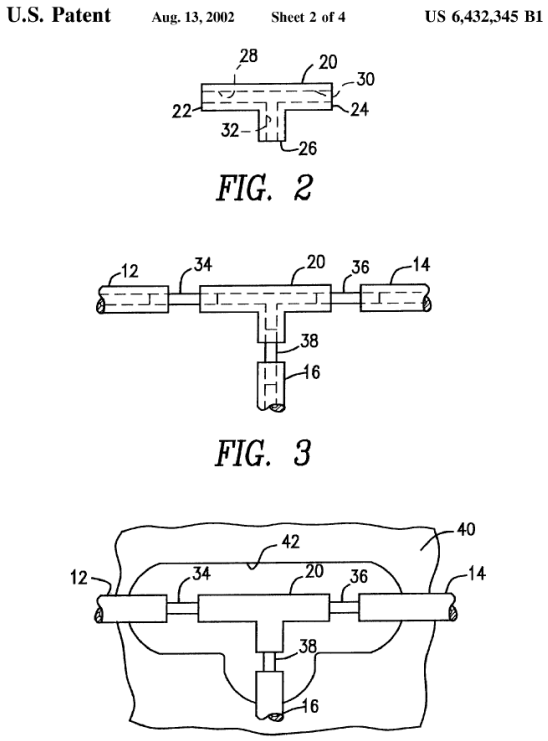

Illustrative example of subject matter classified in B29C 70/845:

U.S. Patent Jan. 31, 1995 Sheet 4 of 6 5,385,294

Fig.6

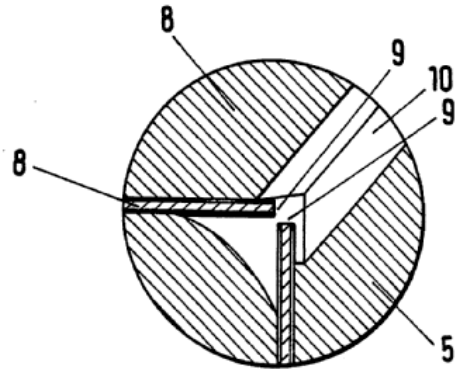

Illustrative example of subject matter classified in B29C 70/882:

DE 10 2008 044 208 A1 2010.06.10

Anhängende Zeichnungen

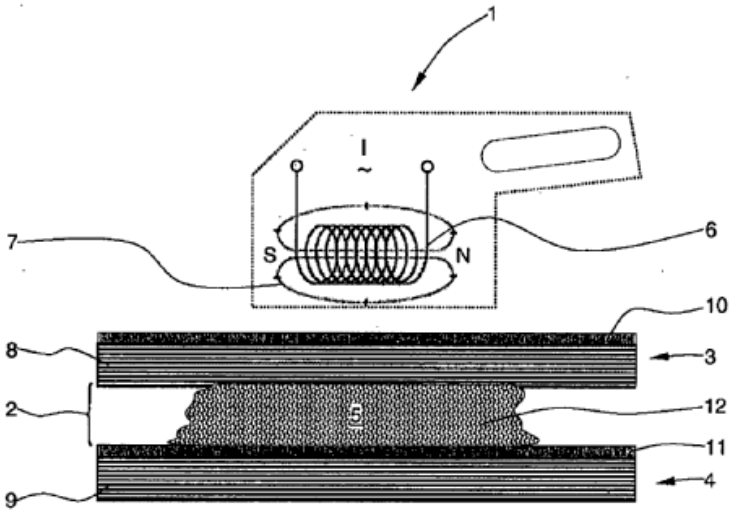

Illustrative example of subject matter classified in B29C 70/885:

EP 1 584 451 A1

FIG. 4

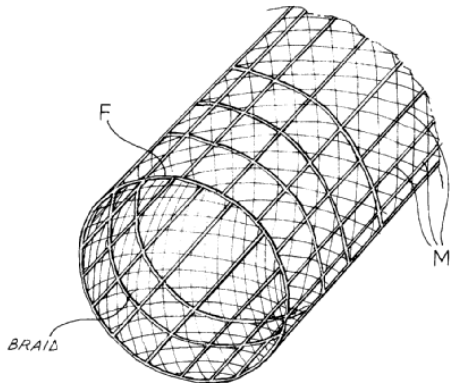

Illustrative example of subject matter classified in B29C 70/887:

Oct. 31, 1967 R. S. GREGOIRE 3,350,249
METHOD OF MAKING IMPREGNATED PLASTIC RIVET REENFORCED LAMINATED FIBER SHEETS
Filed Dec. 7, 1964 2 Sheets-Sheet 2

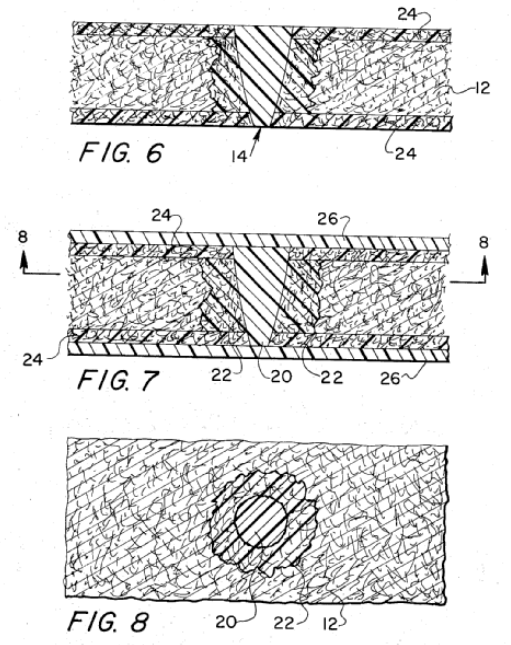

B29C 71/00

After-treatment of articles without altering their shape; Apparatus therefor (B29C 44/56, B29C 73/00 take precedence; surface shaping B29C 59/00 {; for joined or sealed parts B29C 66/03; after-treatment specially adapted for vulcanising tyres B29D 30/0633})

Definition statement

This place covers:

After-treatment of articles without altering their shape e.g. extracting undesirable components (unreacted monomers, solvents) from articles e.g. using vacuum or gases, supercritical fluid; absorbing ingredients (drugs, flavourings) in the wall of articles.

References

Limiting references

This place does not cover:

After-treatment of articles shaped by internal pressure generated in the material	B29C 44/56
Surface shaping, e.g. embossing	B29C 59/00
Repairing of articles	B29C 73/00

Informative references

Attention is drawn to the following places, which may be of interest for search:

Chemical treatment or coating of shaped articles made of macromolecular substances	C08J 7/00

B29C 71/0009

{using liquids, e.g. solvents, swelling agents (spectacle cases, e.g. for cleaning contact lenses A45C 11/04; disinfecting or sterilising contact lenses A61L 12/00, using liquid substances A61L 2/20; cleaning involving the use of liquid in general B08B 3/00; for hydrating contact lenses B29D 11/00067)}

References

Limiting references

This place does not cover:

Cleaning by methods involving the use or presence of liquid or steam, cleaning involving contact with liquid	B08B 3/04
Cleaning by liquid gases or supercritical fluids	B08B 7/0021
Producing contact lenses; hydrating contact lenses	B29D 11/00067
Chemical treatment or coating of shaped articles made of macromolecular substances; with solvents, e.g. swelling agents	C08J 7/02

B29C 2071/0027

{Removing undesirable residual components, e.g. solvents, unreacted monomers}

References

Informative references

Attention is drawn to the following places, which may be of interest for search:

Auxiliary treatment of granules	B29B 9/16
Conditioning or physical treatment of the material to be shaped	B29B 13/00

B29C 71/0063

{for changing crystallisation}

References

Informative references

Attention is drawn to the following places, which may be of interest for search:

Producing flat articles; films or sheets	B29D 7/01
Manufacture of articles or shaped materials containing macromolecular substances; manufacture of films or sheets	C08J 5/18

B29C 71/0072

{for changing orientation}

References

Informative references

Attention is drawn to the following places, which may be of interest for search:

Heating or cooling the stream of extruded material	B29C 48/88
Producing flat articles; films or sheets	B29D 7/01
Manufacture of articles or shaped materials containing macromolecular substances; manufacture of films or sheets	C08J 5/18

B29C 71/009

{using gases without chemical reaction (C08J 7/12 takes precedence; in combination with blow-moulding B29C 49/46; surface treatment using plasma B29C 59/14, ionised gas B29C 59/16)}

References

Limiting references

This place does not cover:

Cleaning by liquid gases or supercritical fluids	B08B 7/0021

B29C 71/02

Thermal after-treatment {(B29C 71/0063 and B29C 71/0072 take precedence)}

Definition statement

This place covers:

annealing, i.e. reducing or eliminating tensions; quenching; tempering; stabilisation against shrinkage (by reducing tensions)

References

Limiting references

This place does not cover:

Heating or cooling the stream of extruded material	B29C 48/88
Processes for manufacturing semi-permeable membranes; after-treatment of organic or inorganic membranes; thermal after-treatment	B01D 67/0083

Informative references

Attention is drawn to the following places, which may be of interest for search:

Producing flat articles; films or sheets	B29D 7/01
Manufacture of articles or shaped materials containing macromolecular substances; manufacture of films or sheets	C08J 5/18

B29C 71/04

by wave energy or particle radiation {, e.g. for curing or vulcanising preformed articles (during moulding, e.g. in a mould B29C 35/08)}

References

Limiting references

This place does not cover:

Processes of treating or compounding macromolecular substances; treatment by wave energy or particle radiation	C08J 3/28
Chemical treatment or coating of shaped articles made of macromolecular substances; chemical modification; treatment by wave energy or particle radiation	C08J 7/123
Apparatus or processes for manufacturing printed circuits; etching the insulating substrate by plasma etching	H05K 3/0041

Informative references

Attention is drawn to the following places, which may be of interest for search:

Methods or apparatus for disinfecting or sterilising materials or objects using physical phenomena; radiation	A61L 2/08
Irradiation devices	G21K 5/00

B29C 73/00

Repairing of articles made from plastics or substances in a plastic state, e.g. of articles shaped or produced by using techniques covered by this subclass or subclass B29D ({linings for tyres acting locally B60C 5/142;} retreading tyres B29D 30/54; devices for covering leaks in pipes or hoses F16L 55/16)

References

Informative references

Attention is drawn to the following places, which may be of interest for search:

Sieving, screening; repairing of screening surfaces	B07B 1/4627
Repairing fractures or cracked metal parts or products, e.g. castings	B23P 6/04
Rebuilding ships, e.g. increasing tonnage	B63B 83/00
Designing, manufacturing, assembling, cleaning, maintaining, or repairing aircraft	B64F 5/40
Materials for sealing or packing joints or covers	C09K 3/10
Blades, blades-carrying members; repairing methods or devices	F01D 5/005

B29C 73/02

using liquid or paste-like material (B29C 73/16 takes precedence)

Definition statement

This place covers:

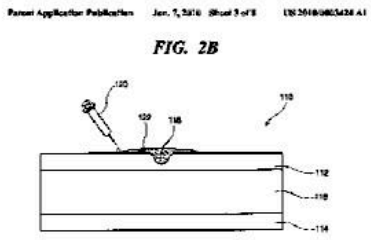
FIG. 2B

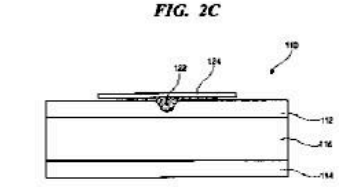
FIG. 2C

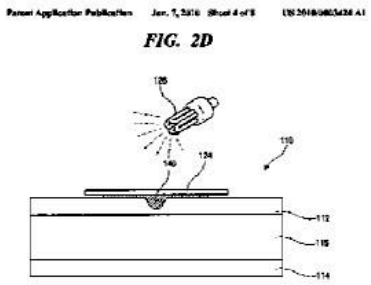
FIG. 2D

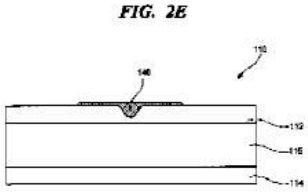
FIG. 2E

Patent Application Publication Mar. 20, 2003 US 2003/0054060 A1

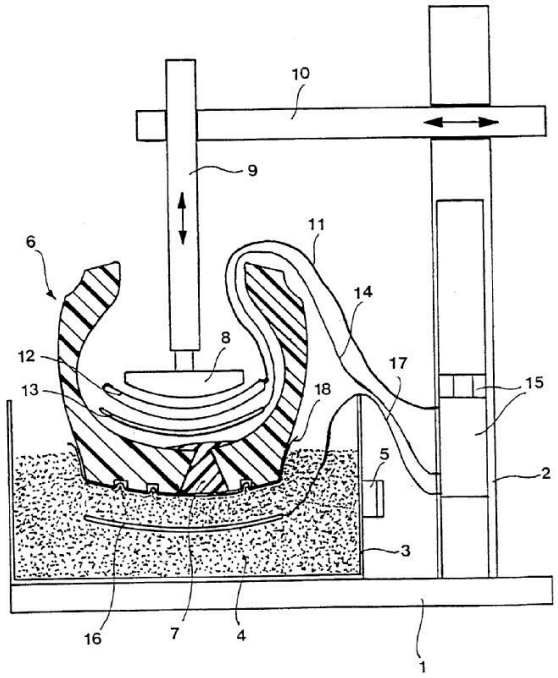

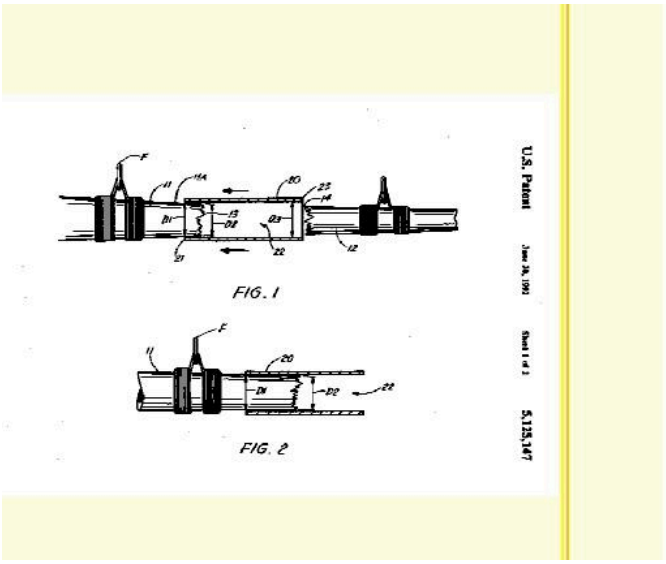

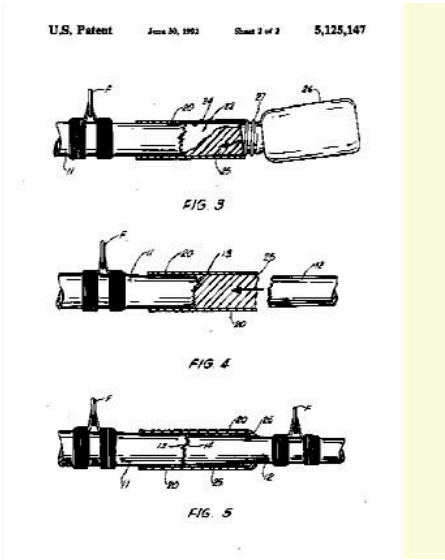

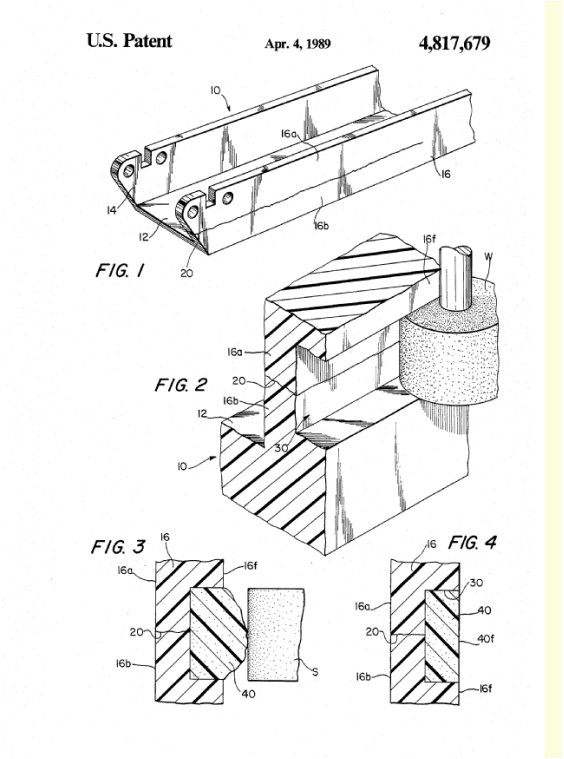

References

Informative references

Attention is drawn to the following places, which may be of interest for search:

Repairing damaged coatings	B05D 5/005

B29C 73/025

{fed under pressure}

Definition statement

This place covers:

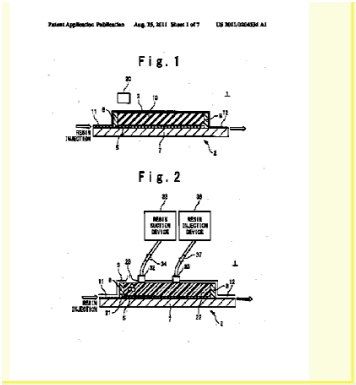

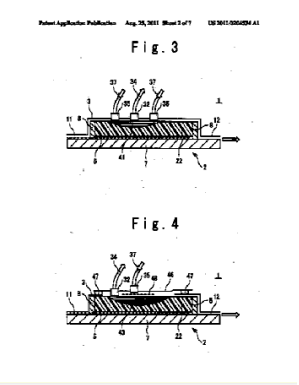

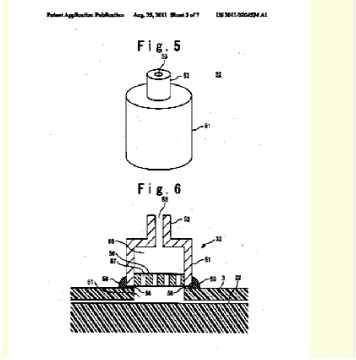

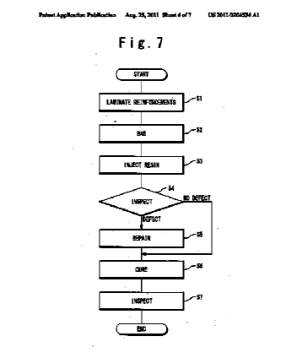

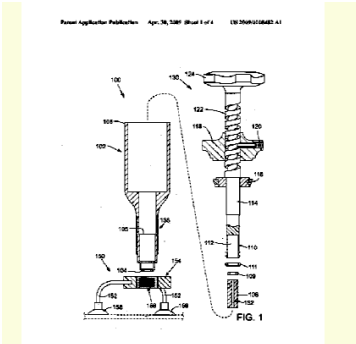

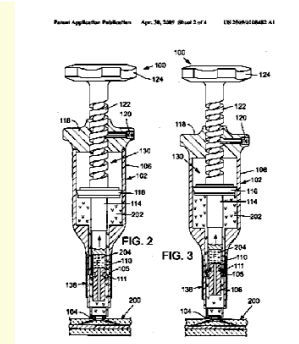

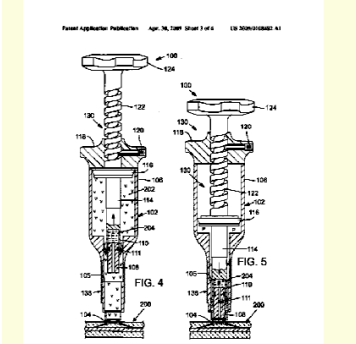

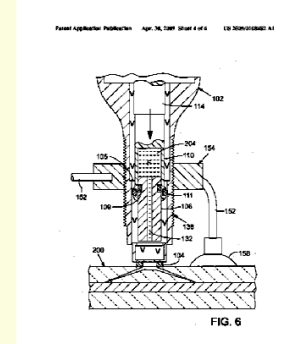

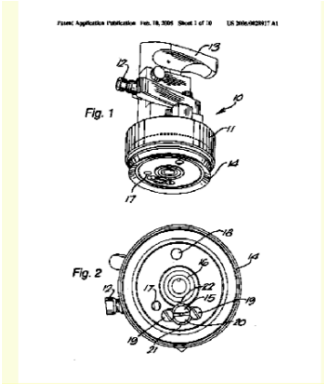
Fig. 1
Fig. 2

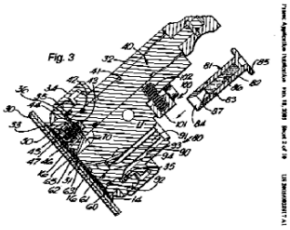
Fig. 3

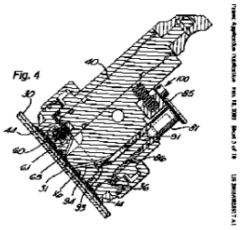
Fig. 4

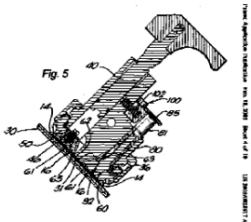
Fig. 5

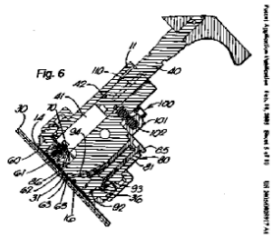
Fig. 6

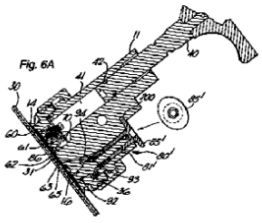
Fig. 6A

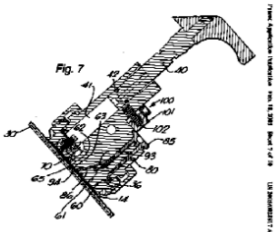
Fig. 7

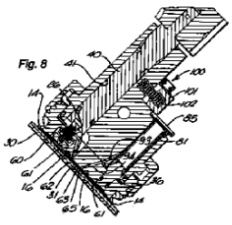
Fig. 8

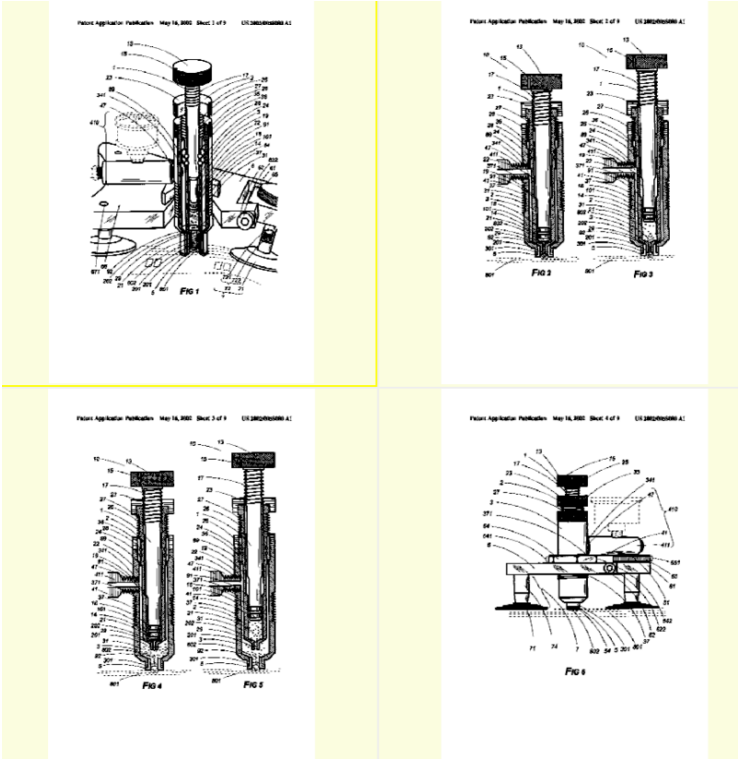

References

Informative references

Attention is drawn to the following places, which may be of interest for search:

Layered products essentially comprising sheet glass; repairing layered products containing glass and synthetic resin layers (e.g. windshields)	B32B 17/10963

B29C 73/04

using preformed elements

Definition statement

This place covers:

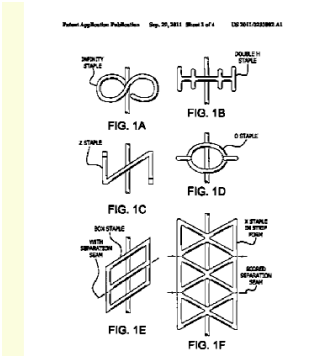

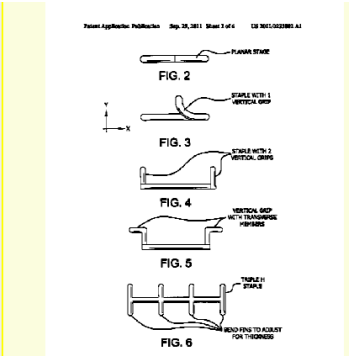

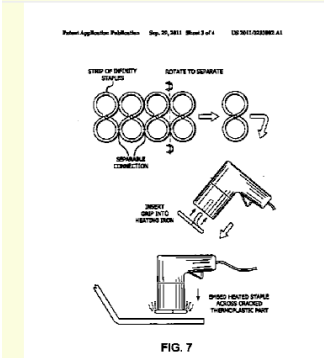

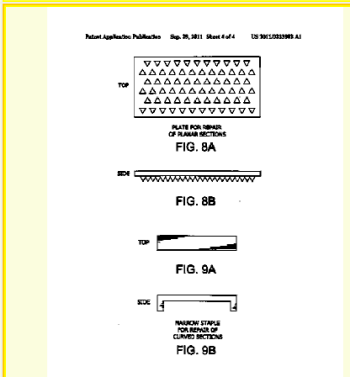

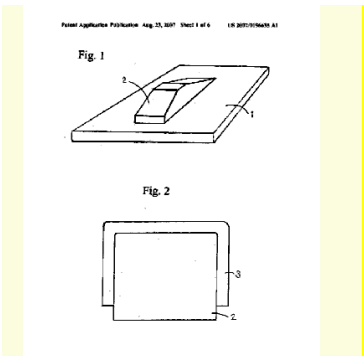

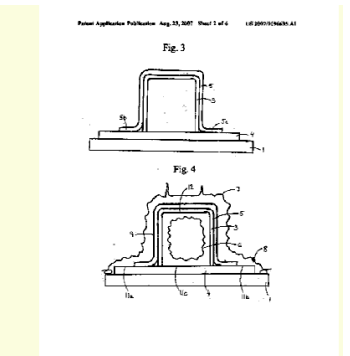

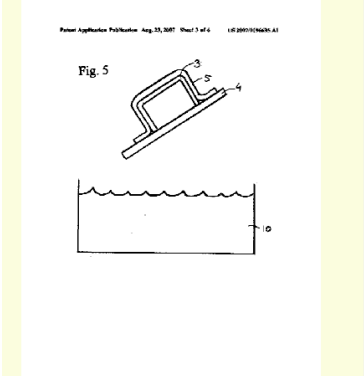

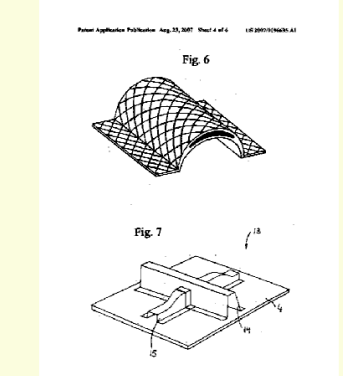

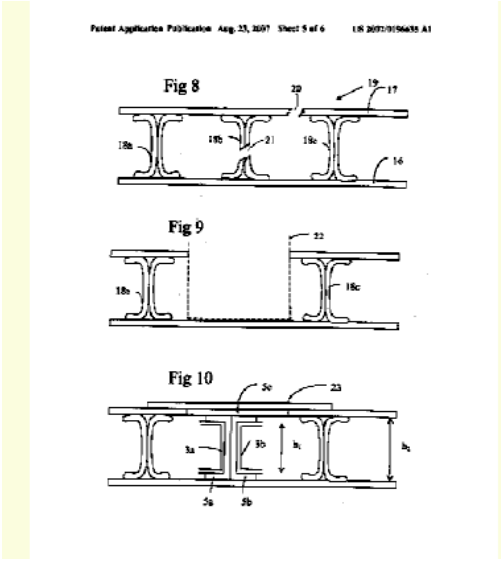

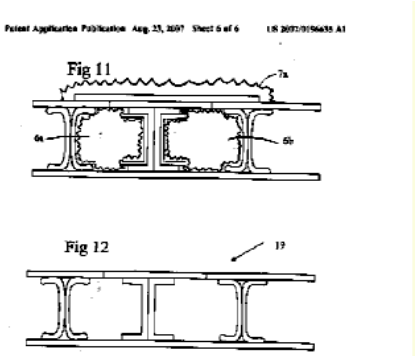

B29C 73/06

using plugs sealing in the hole

Definition statement

This place covers:

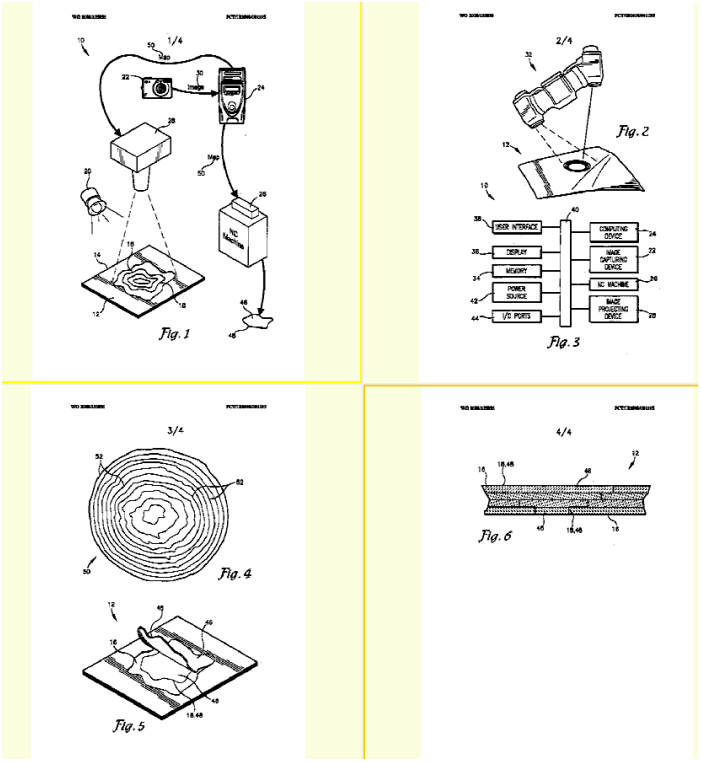

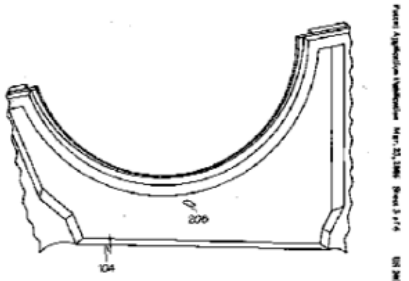

FIG. 3

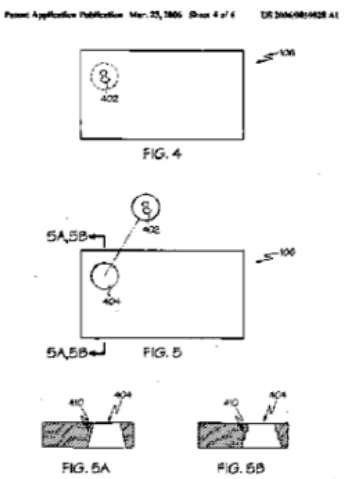

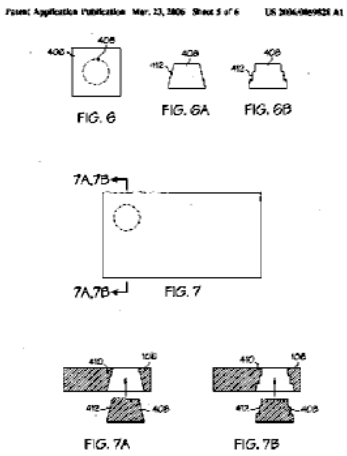

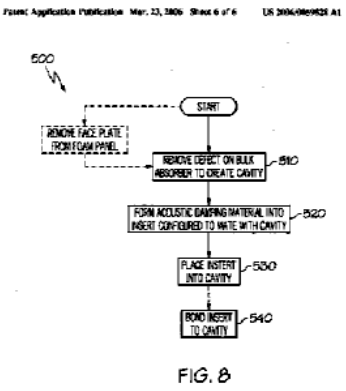

FIG. 8

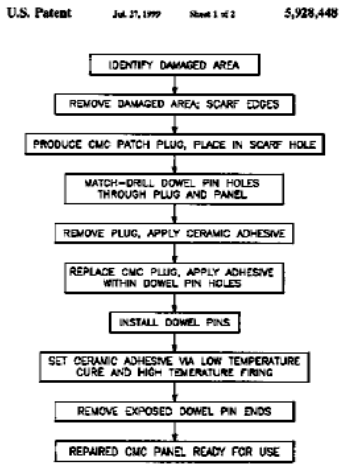

FIG. 1

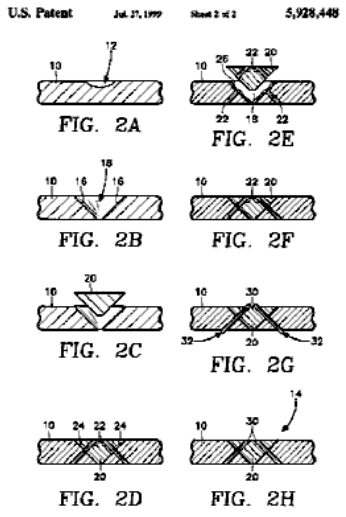

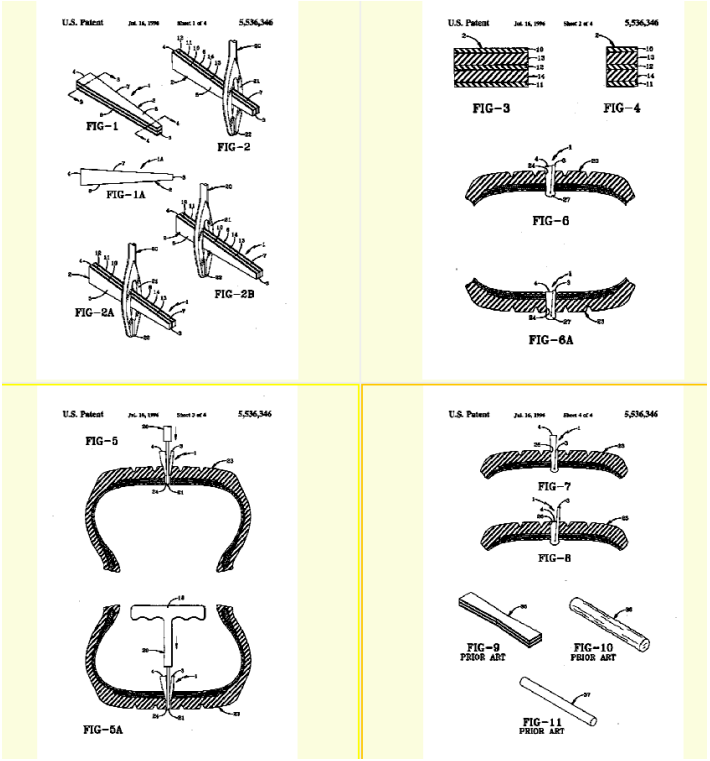

References

Informative references

Attention is drawn to the following places, which may be of interest for search:

Devices for recovering leaks in pipes or hoses; by means of a plug	F16L 55/1612

B29C 73/063

{expandable}

Definition statement

This place covers:

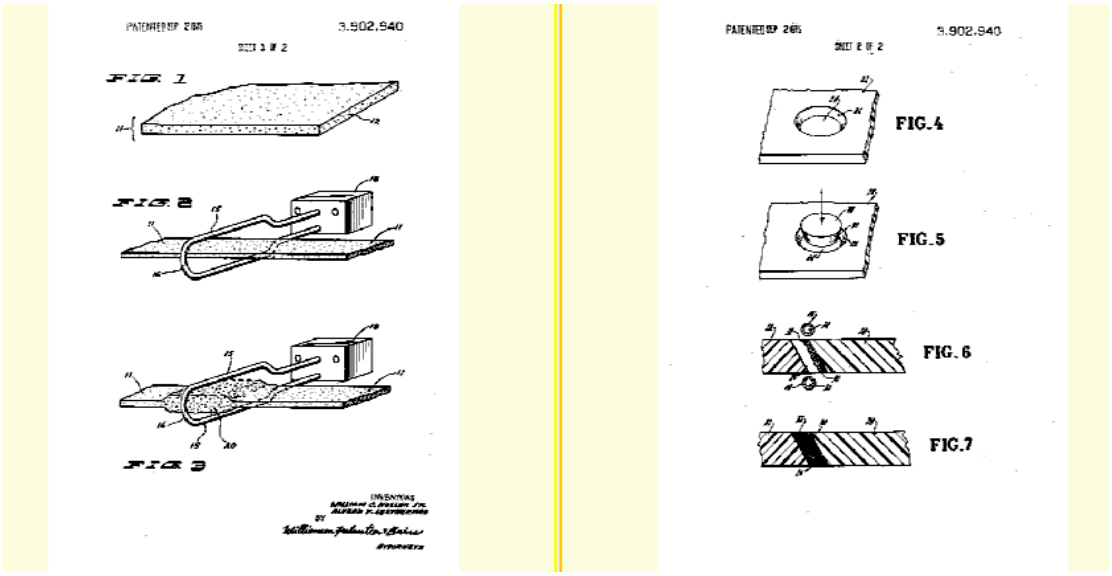

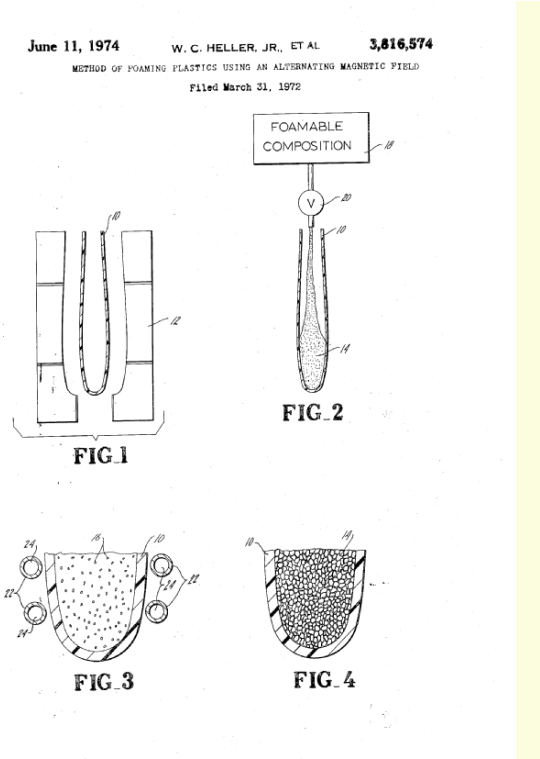

B29C 73/066

{by mechanical means provided on the plug}

Definition statement

This place covers:

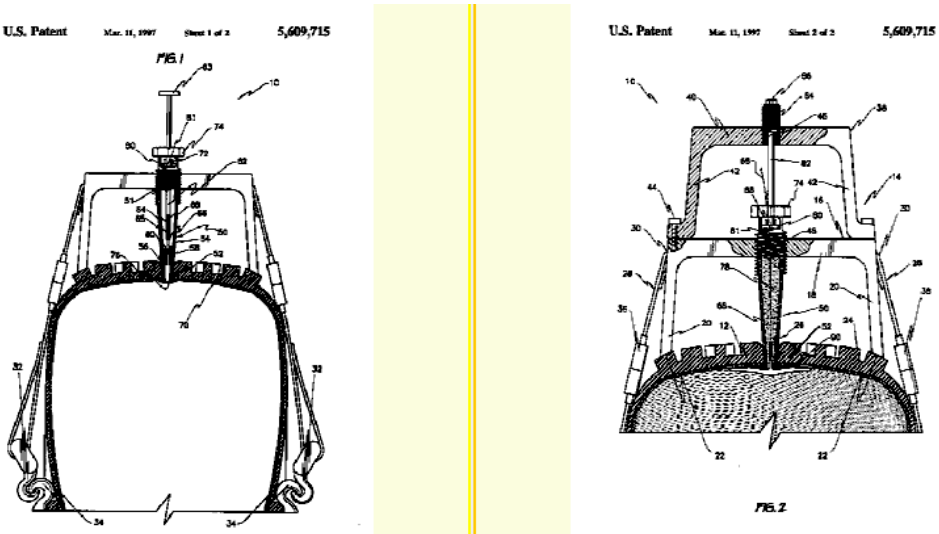

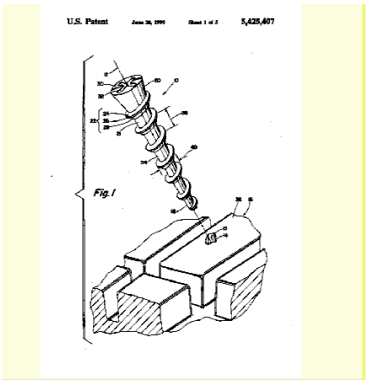
U.S. Patent
5,425,407
Fig. 1

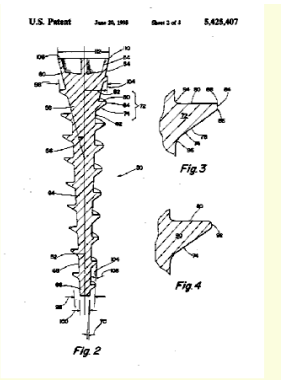
U.S. Patent
5,425,407
Fig. 2
Fig. 3
Fig. 4

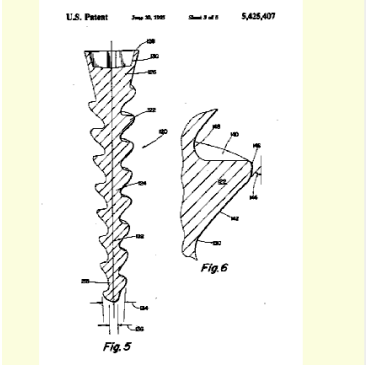
U.S. Patent
5,425,407
Fig. 5
Fig. 6

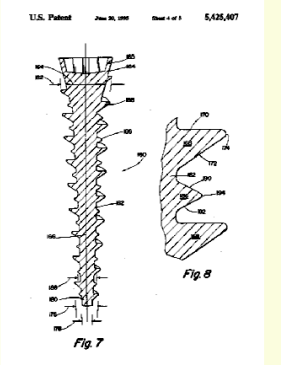
U.S. Patent
5,425,407
Fig. 7
Fig. 8

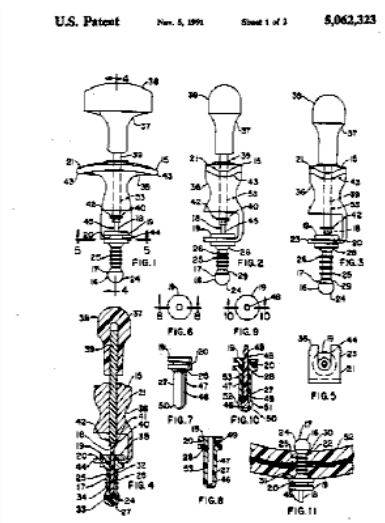
U.S. Patent
5,062,323
FIG. 1
FIG. 2
FIG. 3
FIG. 4
FIG. 5
FIG. 6
FIG. 7
FIG. 8
FIG. 9
FIG. 10
FIG. 11

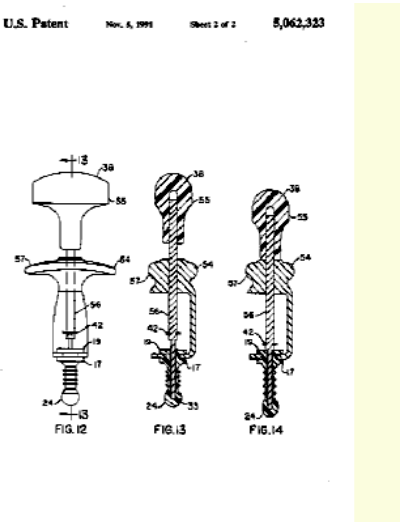
U.S. Patent
5,062,323
FIG. 12
FIG. 13
FIG. 14

B29C 73/08

Apparatus therefor, e.g. for inserting

Definition statement

This place covers:

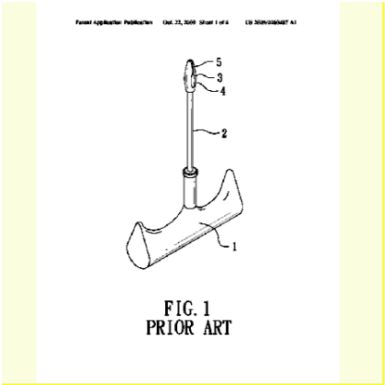

FIG. 1
PRIOR ART

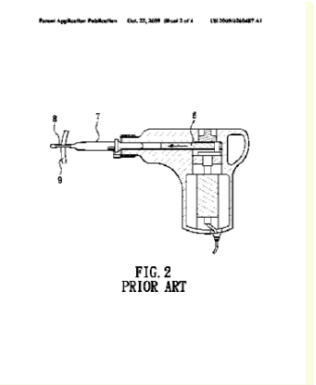

FIG. 2
PRIOR ART

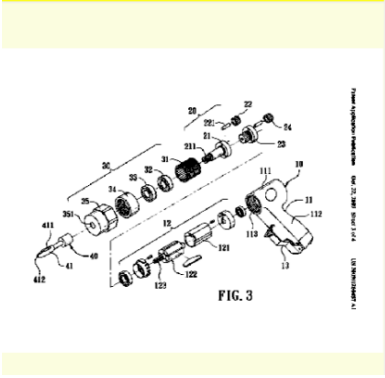

FIG. 3

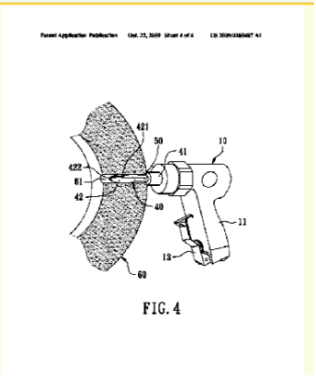

FIG. 4

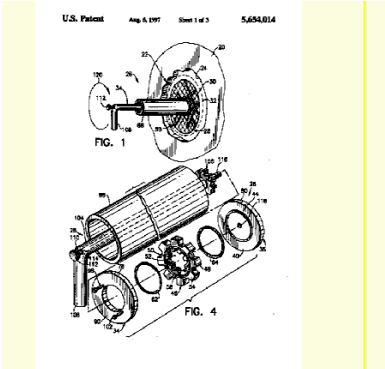

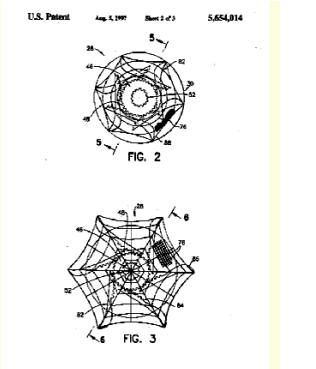

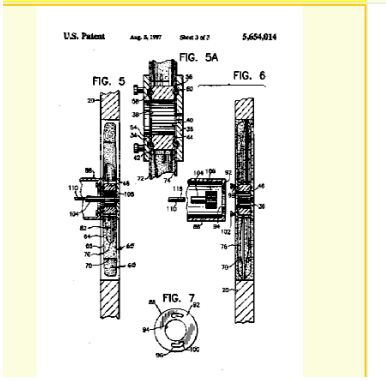

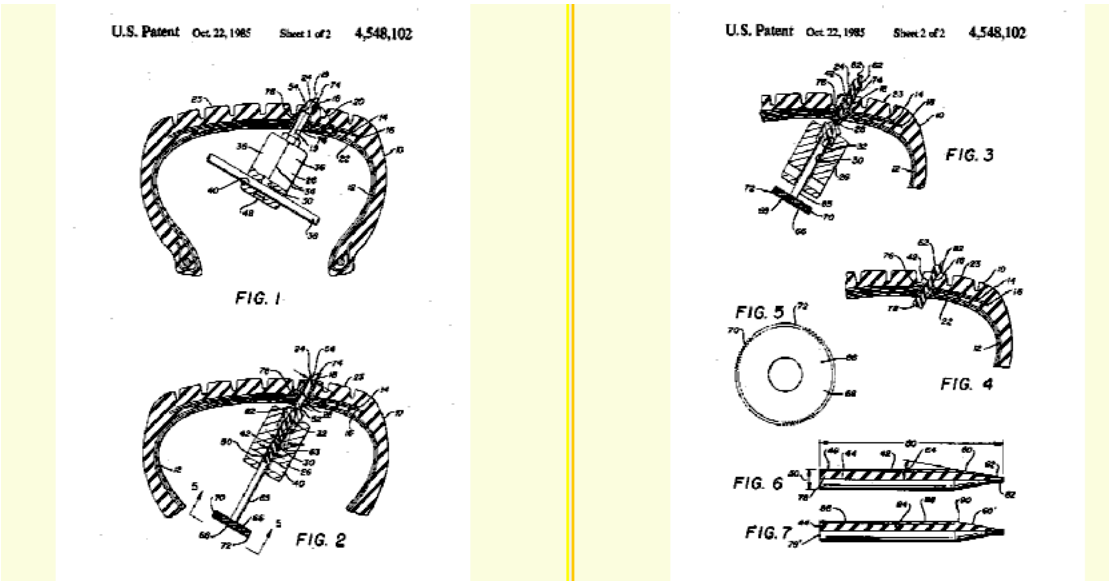

B29C 73/10

using patches sealing on the surface of the article (B29C 73/14 takes precedence)

Definition statement

This place covers:

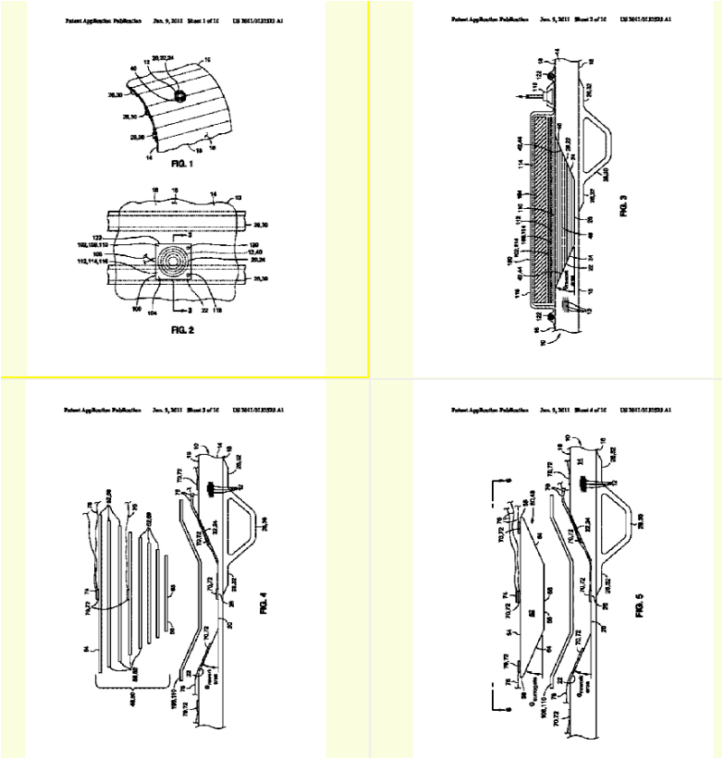

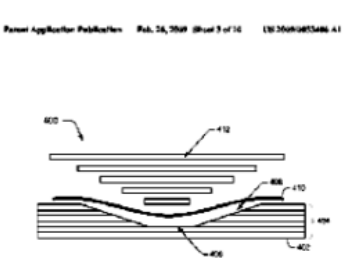

Fig. 4a

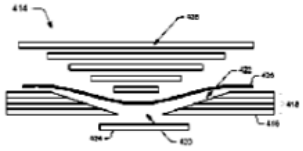

Fig. 4b

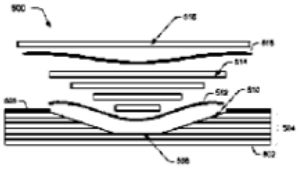

Fig. 5a

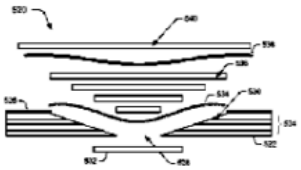

Fig. 5b

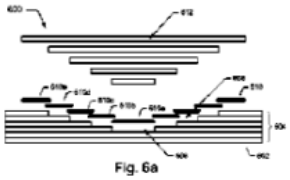

Fig. 6a

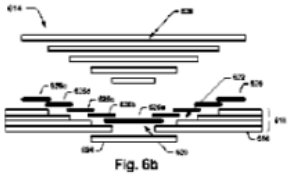

Fig. 6b

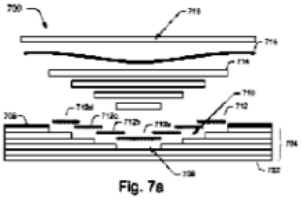

Fig. 7a

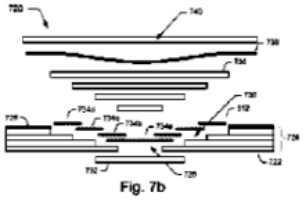

Fig. 7b

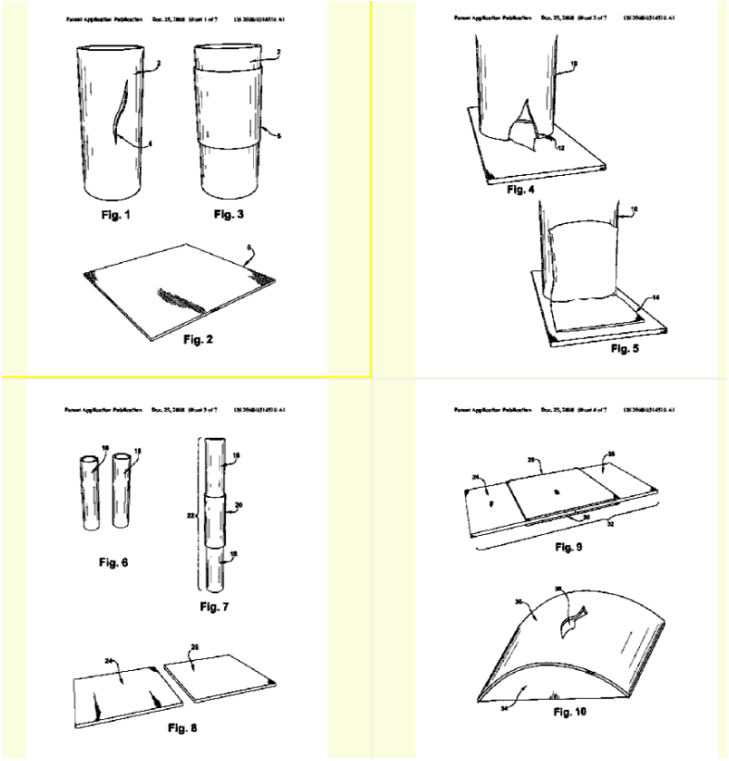

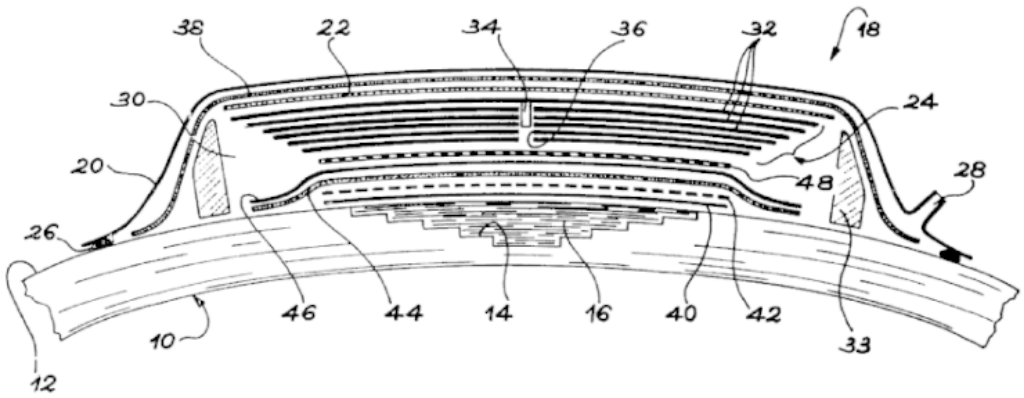

U.S. Patent Mar. 27, 2001 US 6,206,067 B1

References

Informative references

Attention is drawn to the following places, which may be of interest for search:

Designing, manufacturing, assembling, cleaning, maintaining, or repairing aircraft	B64F 5/40
Working measures on existing buildings; repairing, e.g. filling cracks	E04G 23/02

Working measures on existing buildings; repairing, e.g. filling cracks; arrangements for filling cracks or cavities in building constructions	E04G 23/0203
Repairing or joining pipes on or under water	F16L 1/26
Devices for recovering leaks in pipes or hoses	F16L 55/16
Devices for recovering leaks in pipes or hoses; from outside the pipe	F16L 55/168
Devices for recovering leaks in pipes or hoses; from outside the pipe; by means of a parch which is fixed on the wall of the pipe by means of an adhesive, a weld or the like	F16L 55/1683

B29C 73/105

{provided with a centering element}

Definition statement

This place covers:

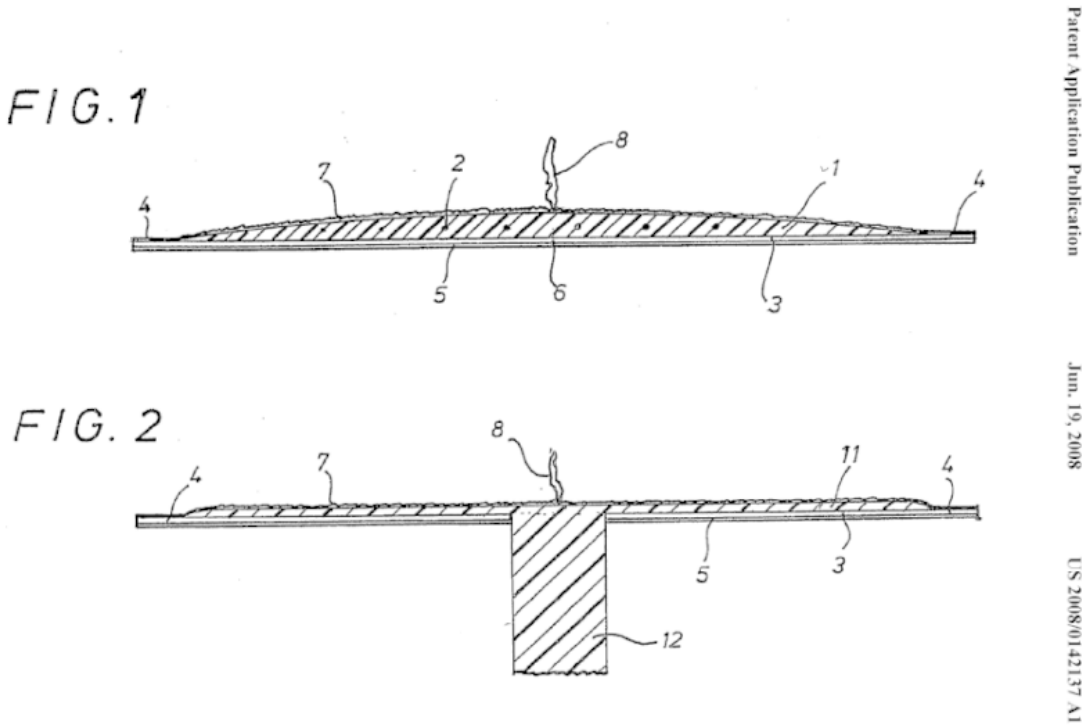

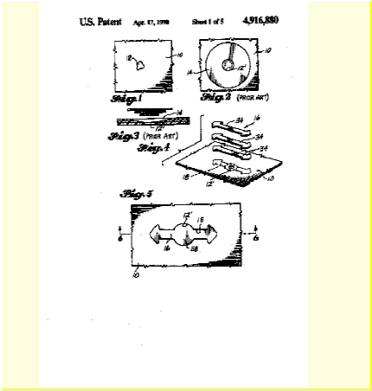
U.S. Patent Apr. 17, 1990 Sheet 1 of 5 4,916,880
Fig. 1
Fig. 2 (PRIOR ART)
Fig. 3 (PRIOR ART)
Fig. 4
Fig. 5

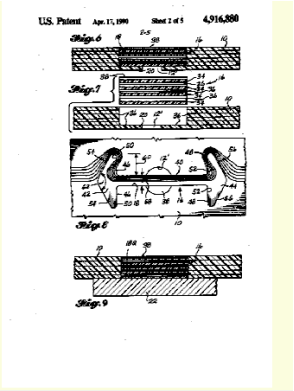
U.S. Patent Apr. 17, 1990 Sheet 2 of 5 4,916,880
Fig. 6
Fig. 7
Fig. 8
Fig. 9

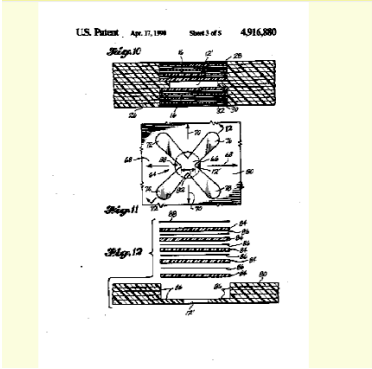
U.S. Patent Apr. 17, 1990 Sheet 3 of 5 4,916,880
Fig. 10
Fig. 11
Fig. 12

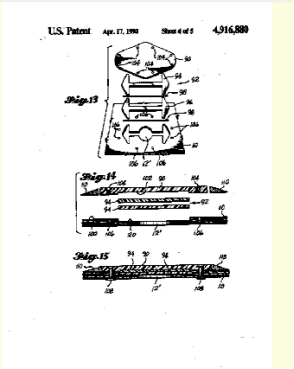
U.S. Patent Apr. 17, 1990 Sheet 4 of 5 4,916,880
Fig. 13
Fig. 14
Fig. 15

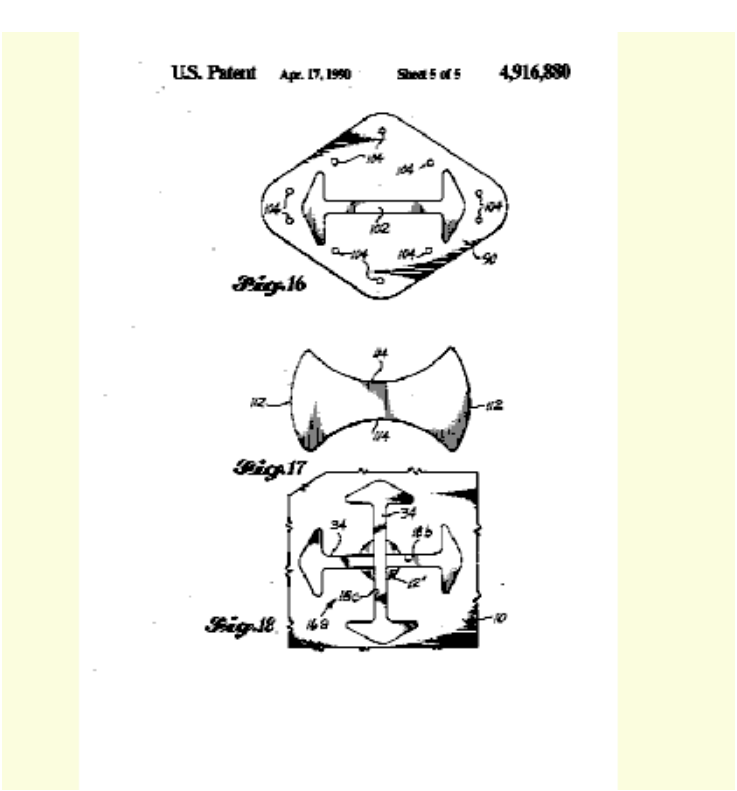
U.S. Patent Apr. 17, 1990 Sheet 5 of 5 4,916,880
Fig. 16
Fig. 17
Fig. 18

B29C 73/12

Apparatus therefor, e.g. for applying (B29C 73/30 takes precedence)

Definition statement

This place covers:

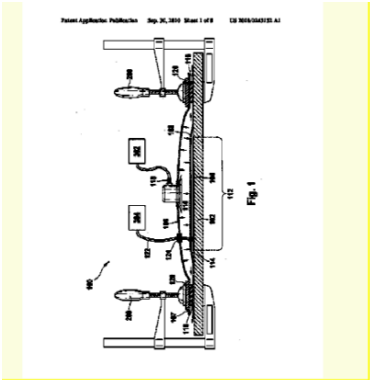

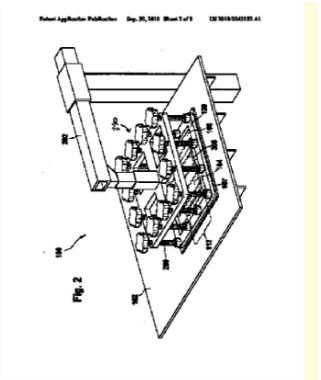

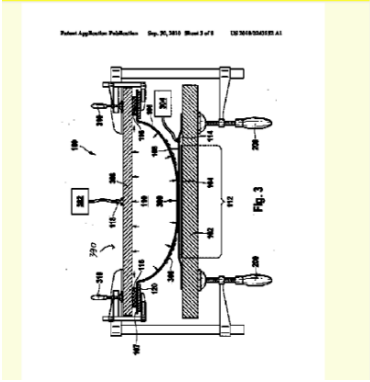

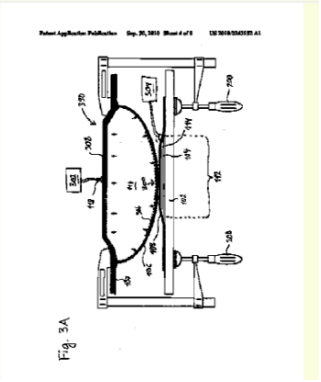

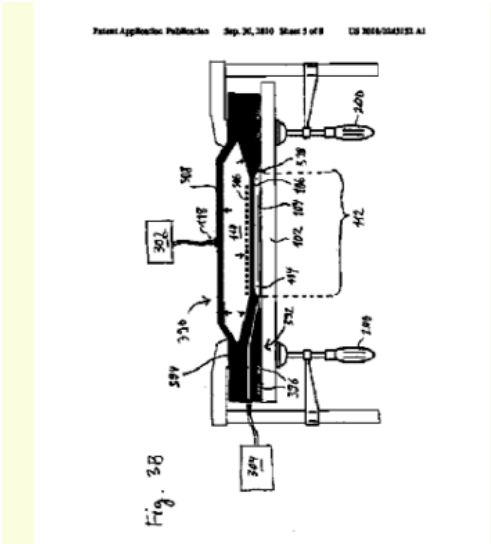

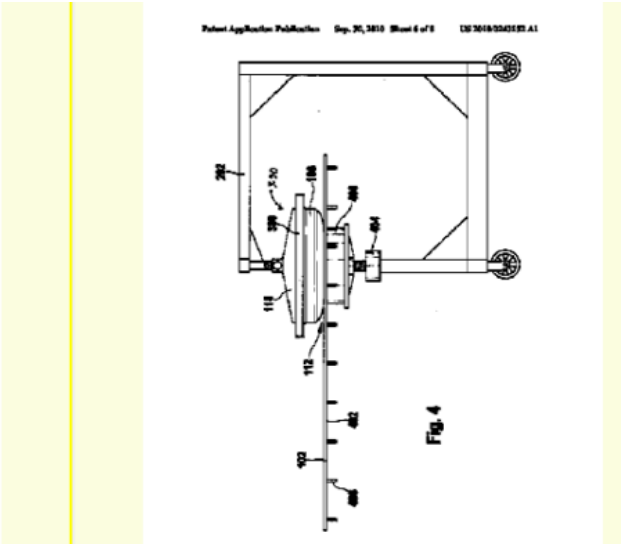

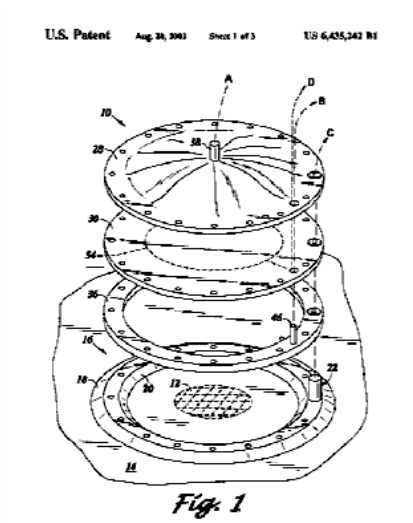

Fig. 1

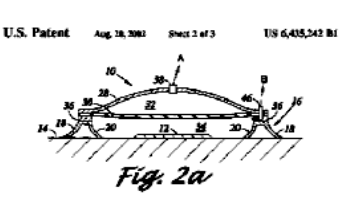

Fig. 2a

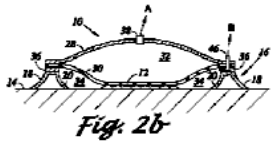
Fig. 2b

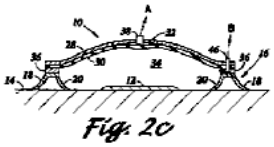
Fig. 2c

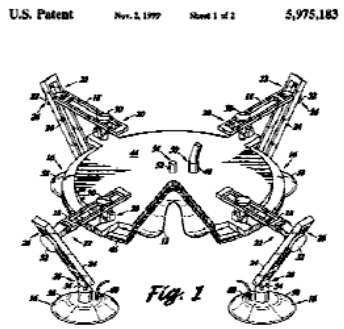

Fig. 1

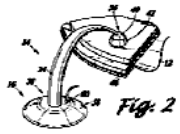
Fig. 2

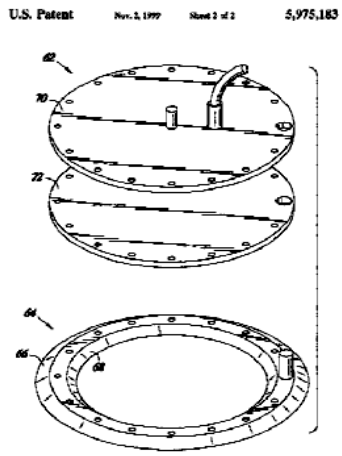

Fig. 3

B29C 73/14

using elements composed of two parts joined together after having been placed one on each side of the article

Definition statement

This place covers:

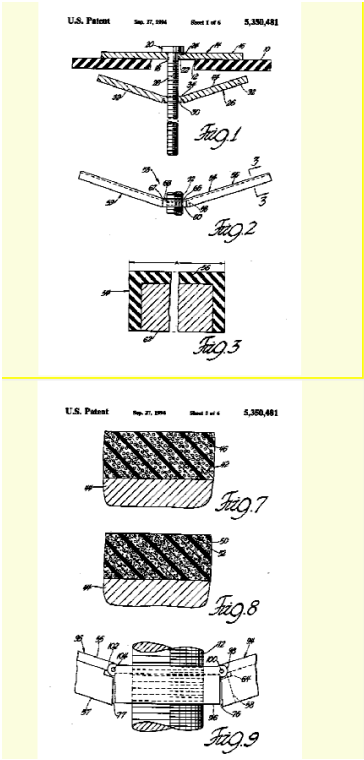

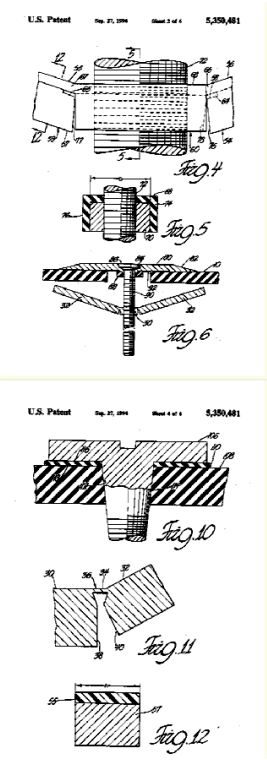

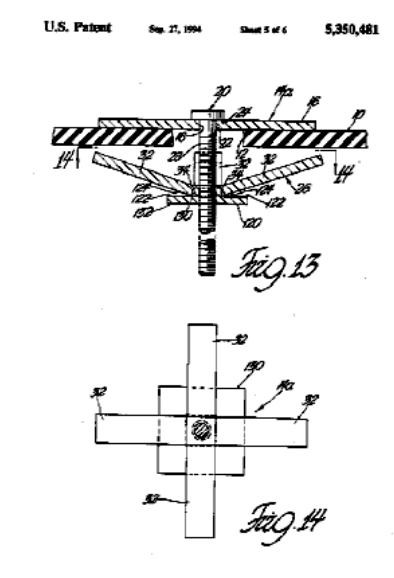

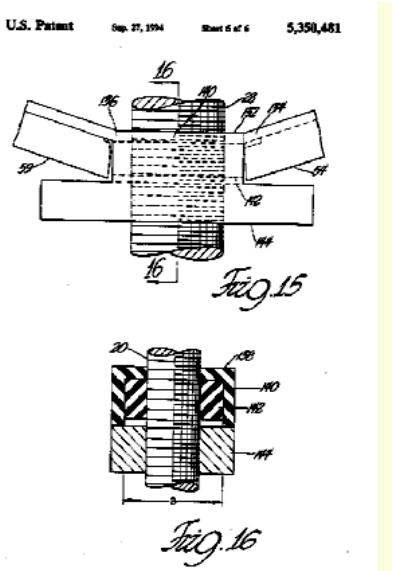

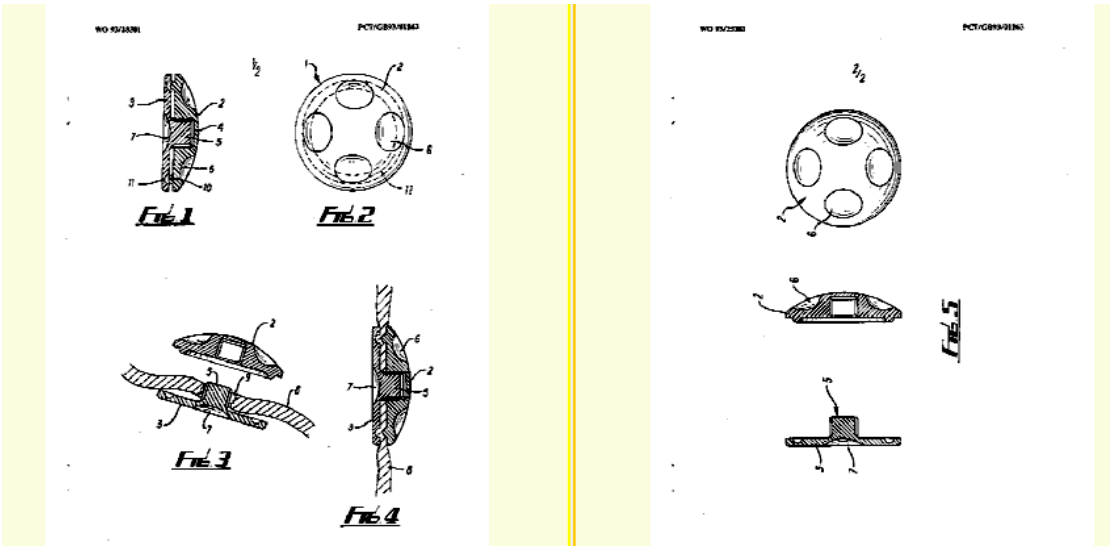

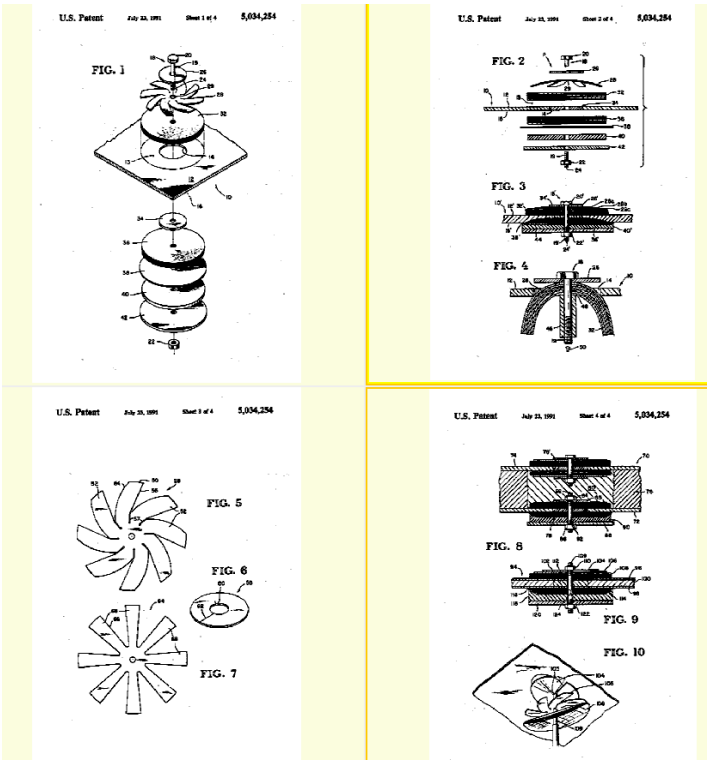

B29C 73/16

Auto-repairing or self-sealing arrangements or agents {(incorporating auto-repairing or self-sealing arrangements or agents on or into tyres B29D 30/0685)}

References

Informative references

Attention is drawn to the following places, which may be of interest for search:

Producing pneumatic or solid tyres; retreading	B29D 30/54
Tyres characterised by the chemical composition or the physical arrangement or mixture of the composition; composition of the inner liner	B60C 1/0008

Inflatable pneumatic tyres; without separate inflatable inserts; with impervious liner or coating on the inner wall of the tyre	B60C 5/14
Linings therefor acting locally	B60C 5/142
Tyres parts or constructions; puncture preventing arragements	B60C 19/12
Tyres parts or constructions; puncture preventing arragements; disposed between the inner chamber and the tyre	B60C 19/122
Tyres parts or constructions; puncture preventing arragements; disposed removable on the tyre	B60C 19/125

B29C 73/163

{Sealing compositions or agents, e.g. combined with propellant agents}

References

Informative references

Attention is drawn to the following places, which may be of interest for search:

Tyres parts or constructions; puncture preventing arragements	B60C 19/12
Tyres parts or constructions; puncture preventing arragements; disposed between the inner chamber and the tyre	B60C 19/122
Tyres parts or constructions; puncture preventing arragements; disposed removable on the tyre	B60C 19/125
Materials for stopping leaks, e.g. in radiators, in tanks	C09K 3/12

B29C 73/166

{Devices or methods for introducing sealing compositions into articles}

Definition statement

This place covers:

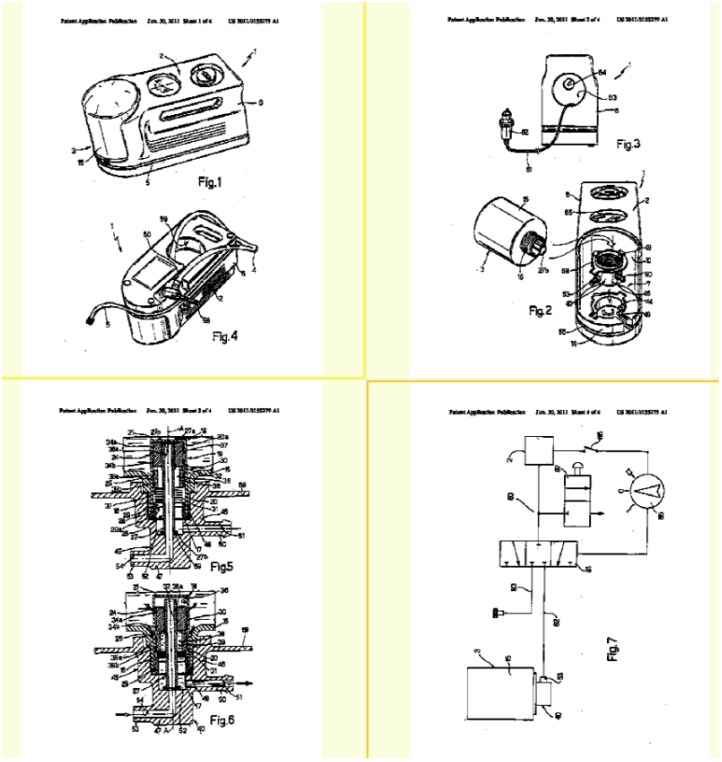

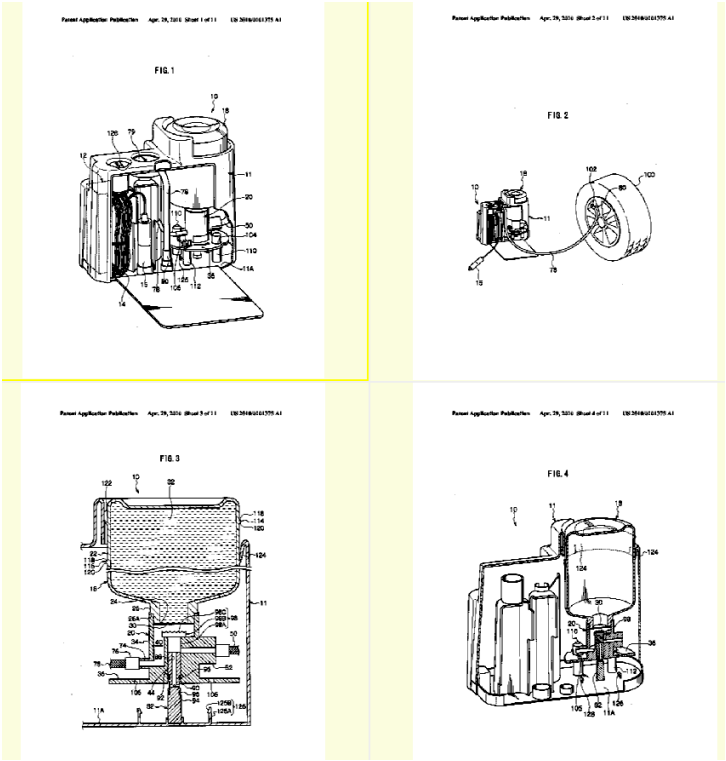

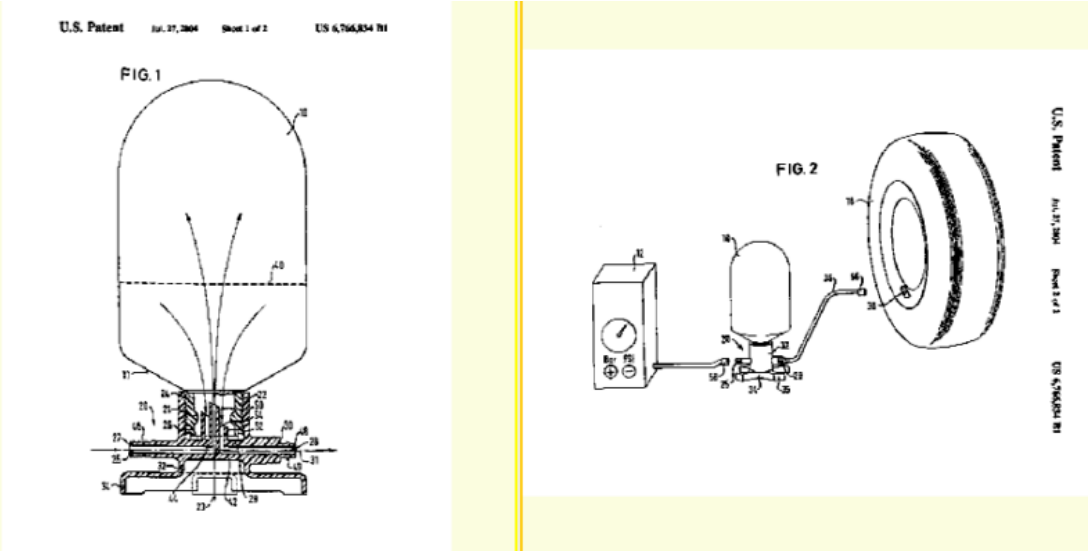

References

Informative references

Attention is drawn to the following places, which may be of interest for search:

Arrangements for tyre-inflating valves to tyres or rims; accessories for tyre-inflating valves; for filling a tyre with, or removing from a tyre, particular materials, e.g. liquids	B60C 29/062
Servicing, maintaining, repairing or refitting of vehicles; supplyingair for tyre inflation	B60S 5/04
Characterised by the inflation control means or the drive of the air pressure system	B60S 5/043
Using electrical or electronical means	B60S 5/046

B29C 73/18

the article material itself being self-sealing, e.g. by compression

Definition statement

This place covers:

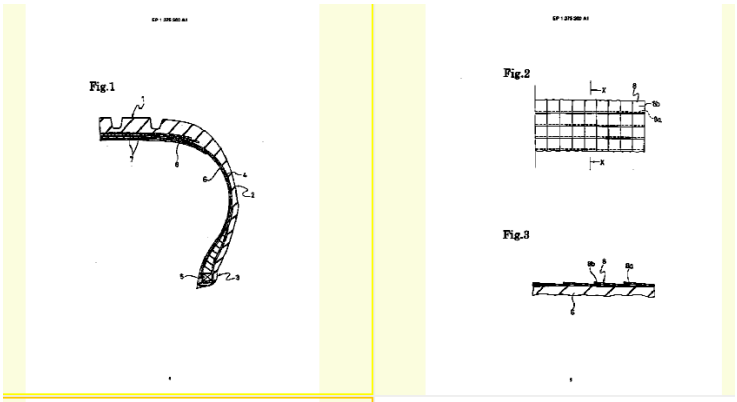

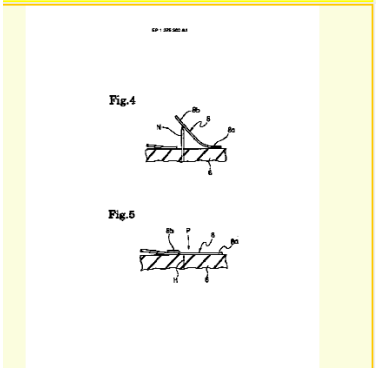

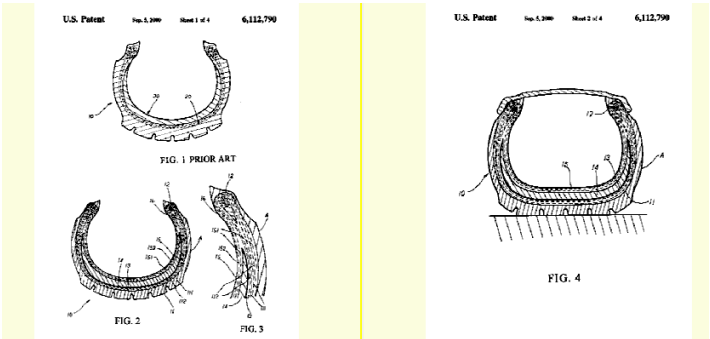

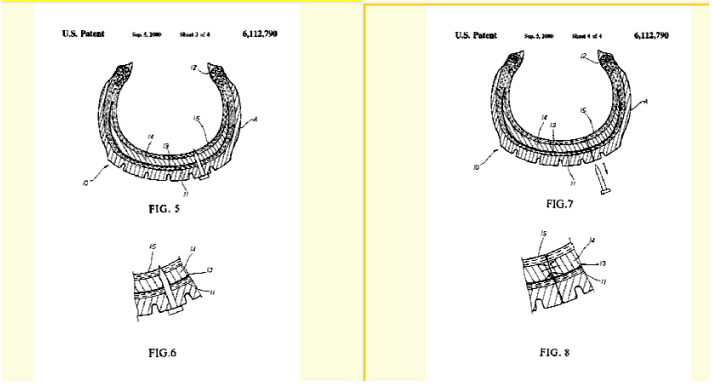

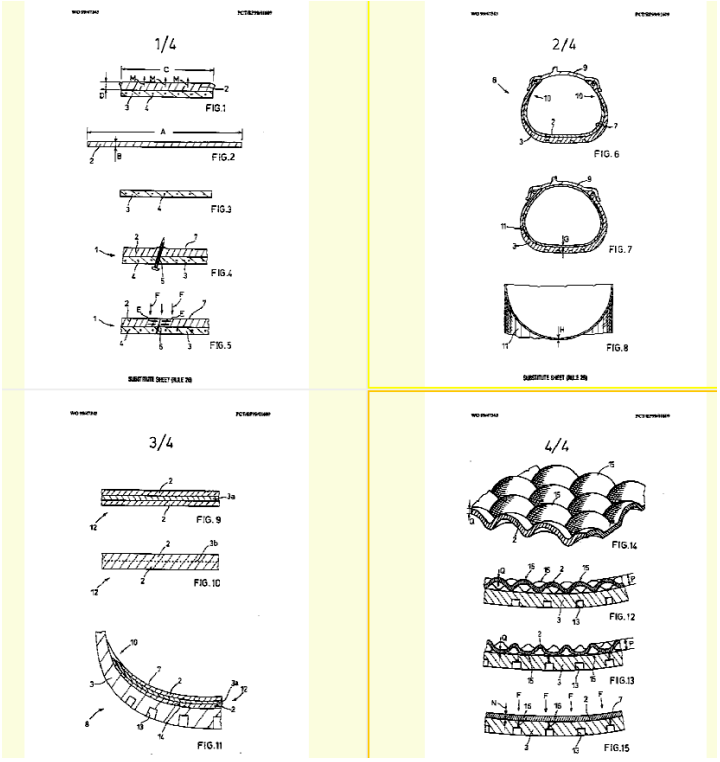

B29C 73/20

the article material only consisting in part of a deformable sealing material

Definition statement

This place covers:

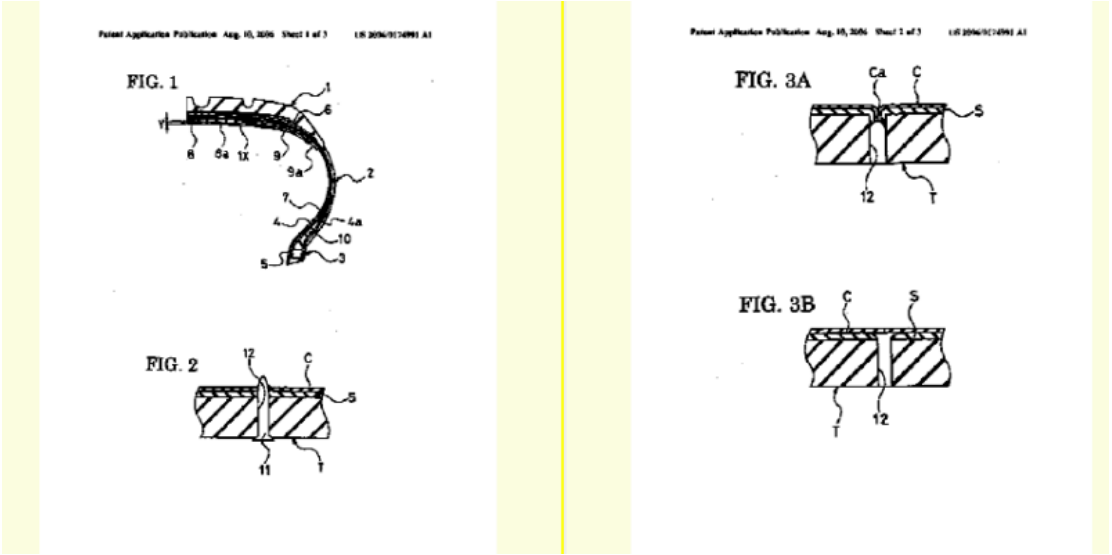

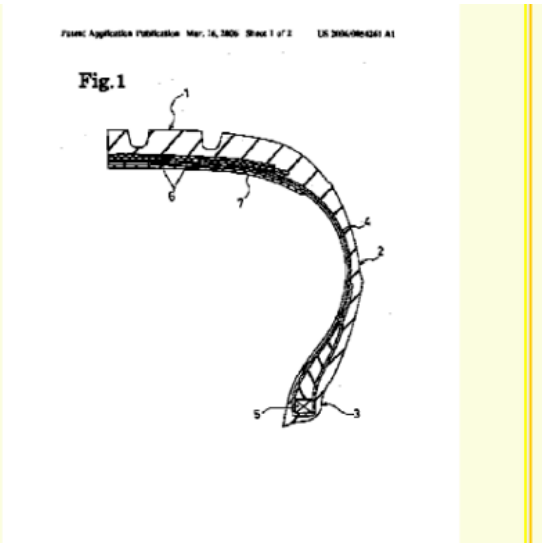
Fig.1

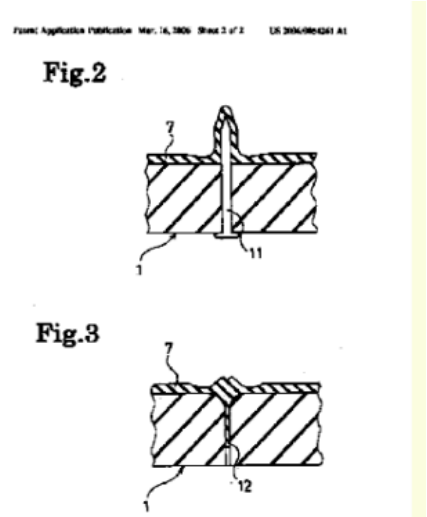
Fig.2
Fig.3

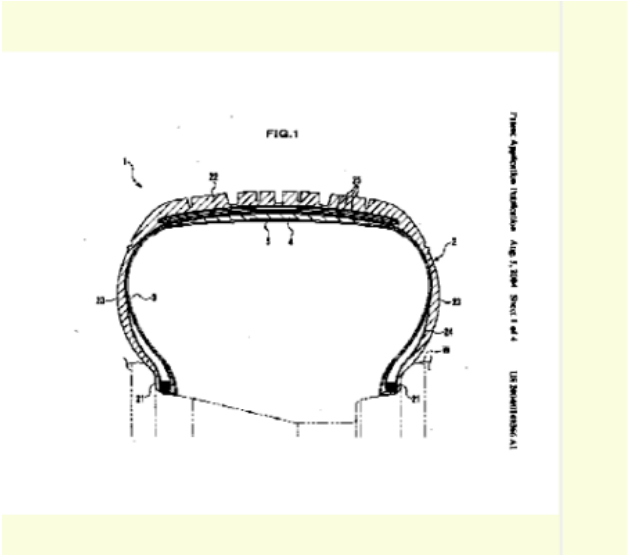
FIG.1

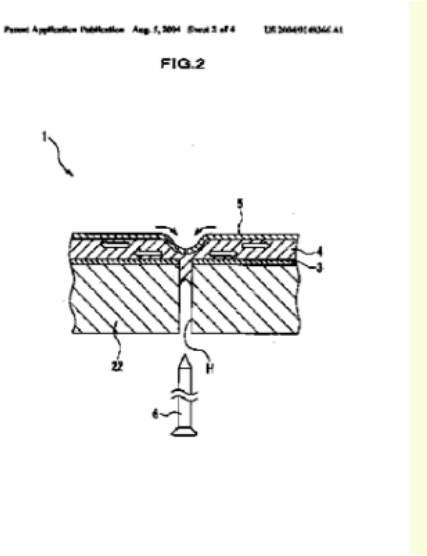
FIG.2

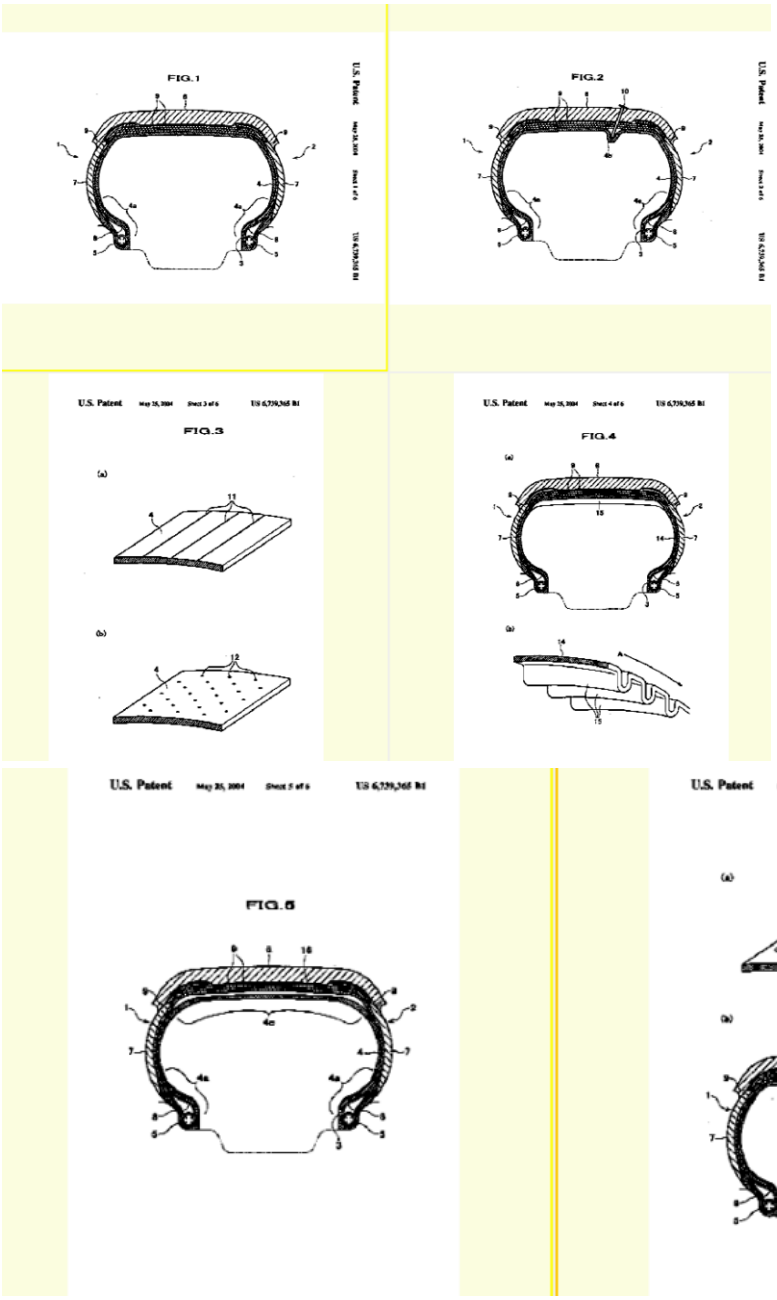
FIG.1
FIG.2
FIG.3
FIG.4
FIG.5
FIG.6

B29C 73/22

the article containing elements including a sealing composition, e.g. powder being liberated when the article is damaged

Definition statement

This place covers:

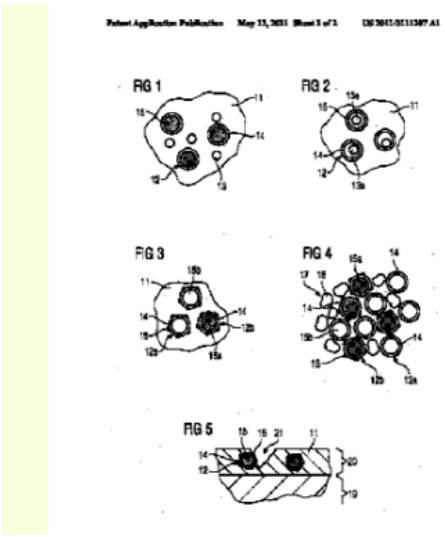

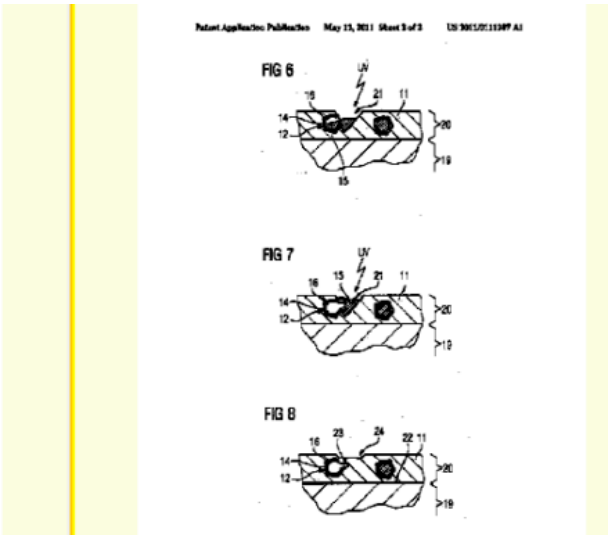

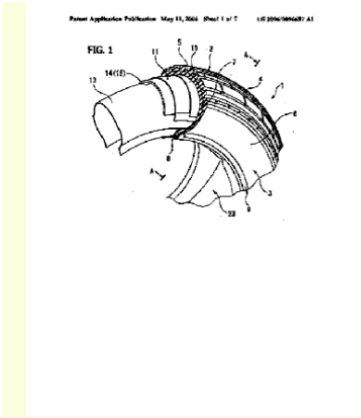

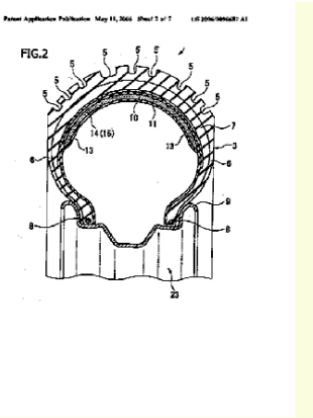

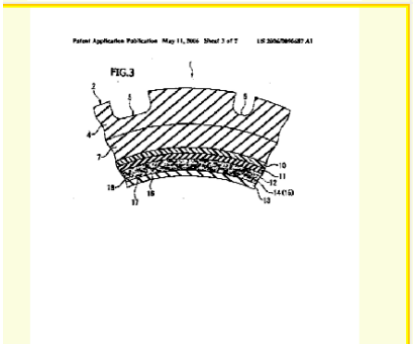

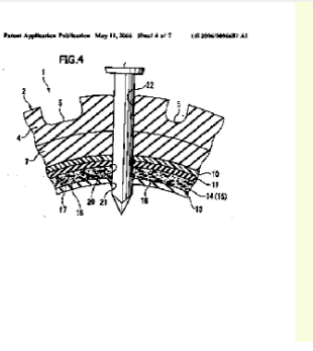

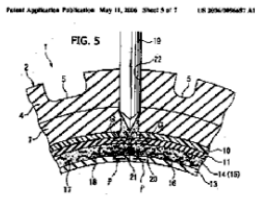
FIG. 5

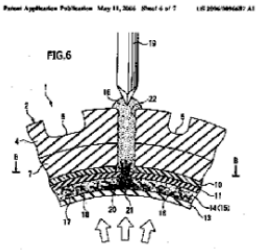
FIG.6

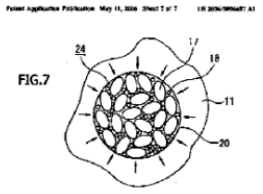
FIG.7
24
18
11
20

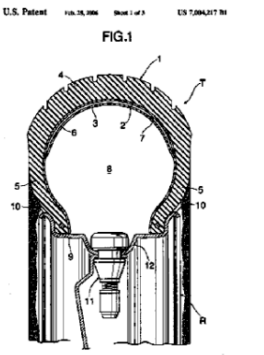
U.S. Patent
FIG.1

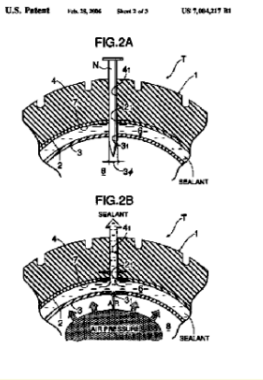
U.S. Patent
FIG.2A
FIG.2B
SEALANT

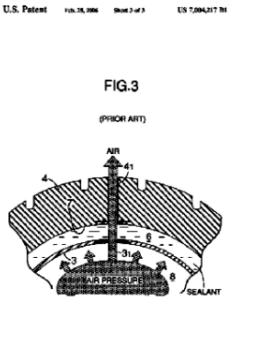
U.S. Patent
FIG.3
(PRIOR ART)
AIR
SEALANT

B29C 73/26

for mechanical pretreatment

Definition statement

This place covers:

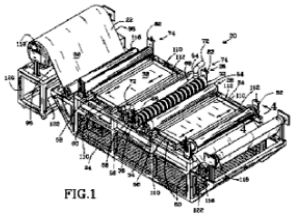

FIG.1

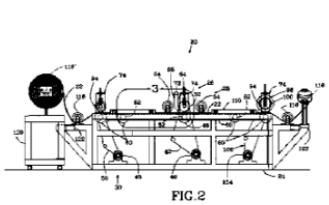

FIG.2

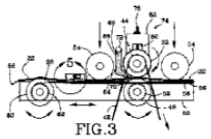

FIG.3

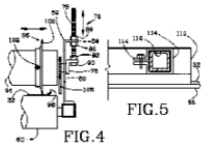

FIG.5

FIG.4

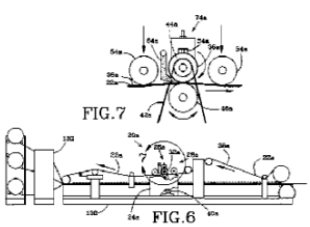

FIG.7

FIG.6

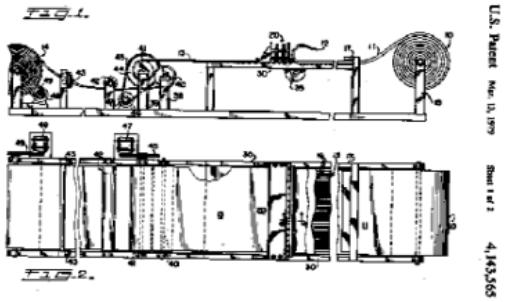

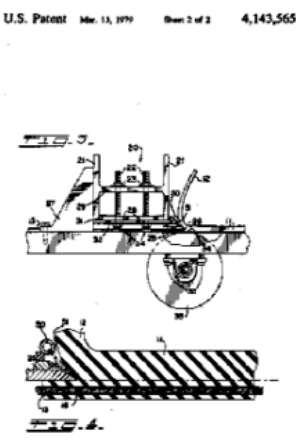

B29C 73/28

for clamping and stretching flexible material, e.g. inner tubes

Definition statement

This place covers:

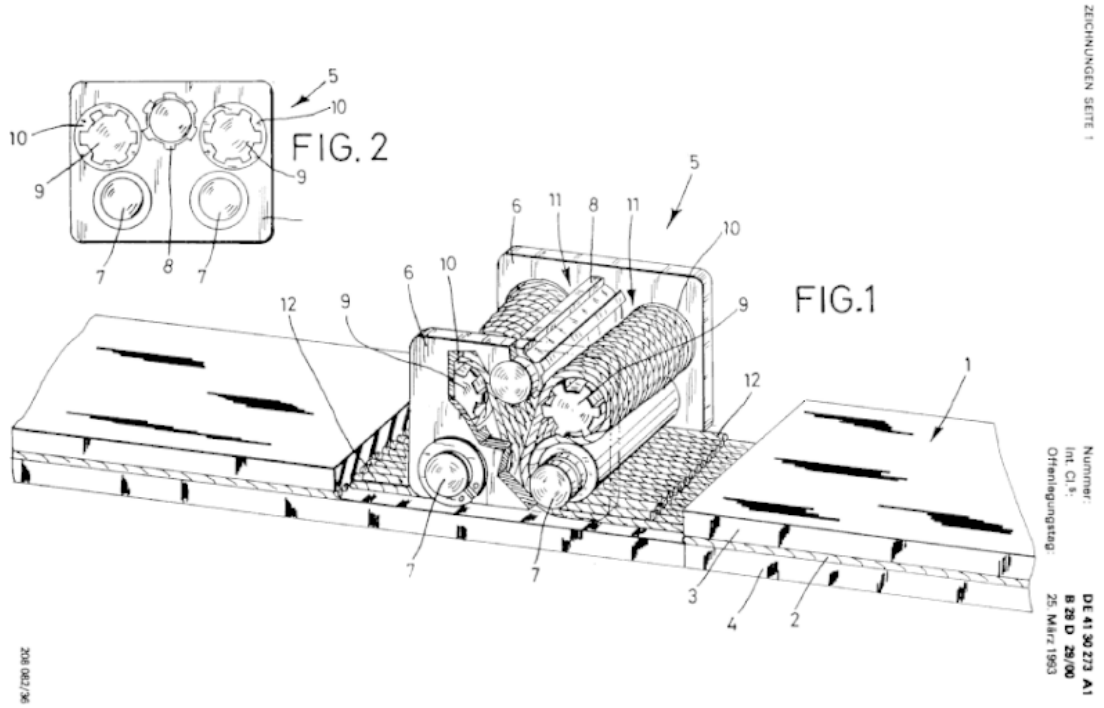

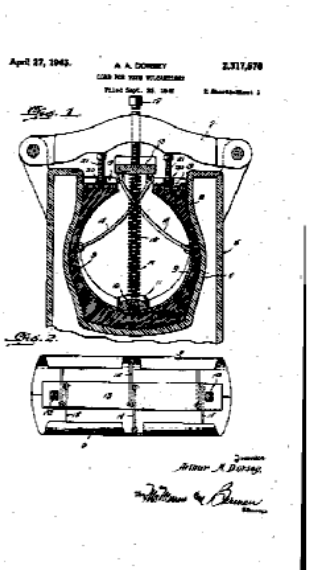

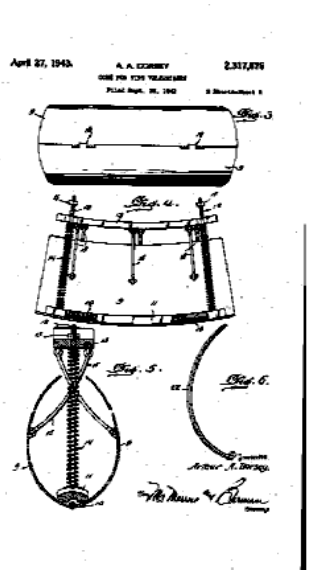

B29C 73/30

for local pressing or local heating

Definition statement

This place covers:

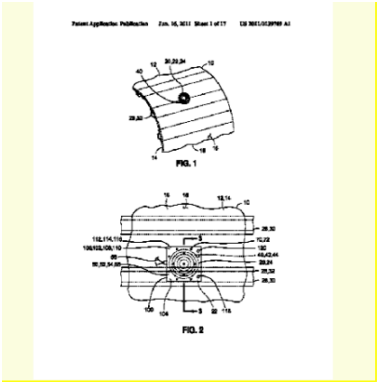

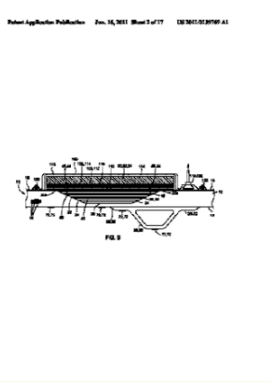

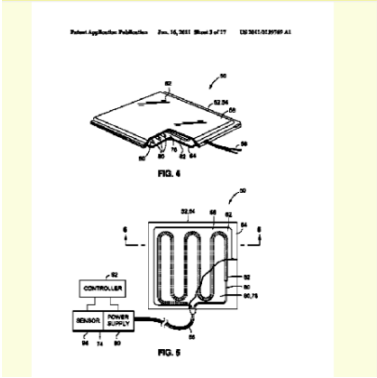

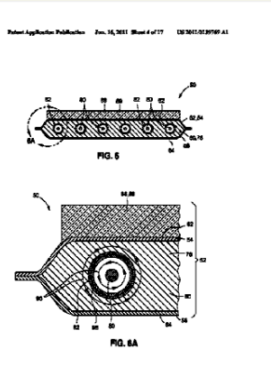

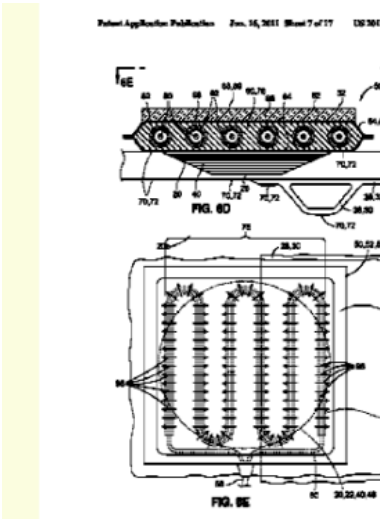

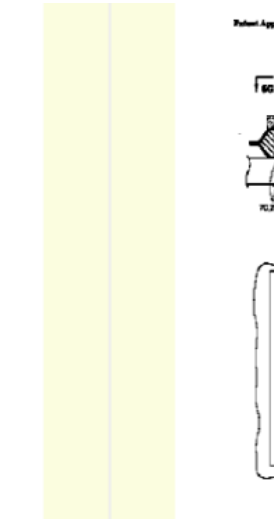

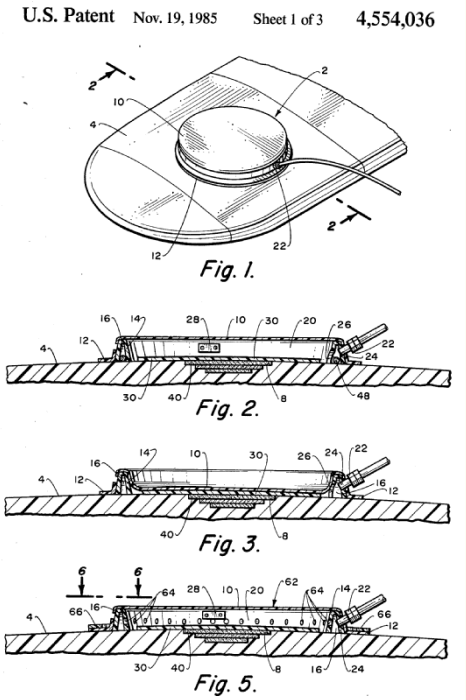
U.S. Patent Nov. 19, 1985 Sheet 1 of 3 4,554,036
Fig. 1.
Fig. 2.
Fig. 3.
Fig. 5.

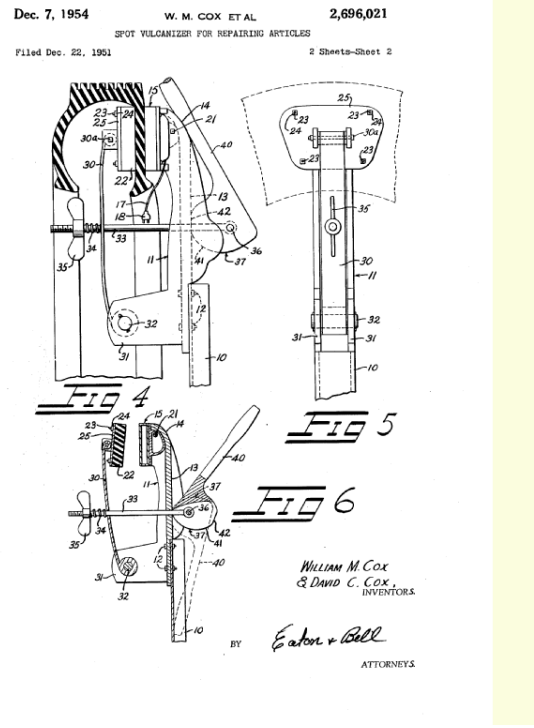
Dec. 7, 1954 W. M. COX ET AL 2,696,021
SPOT VULCANIZER FOR REPAIRING ARTICLES
Filed Dec. 22, 1951 2 Sheets-Sheet 2
Fig 4
Fig 5
Fig 6
WILLIAM M. COX
& DAVID C. COX,
INVENTORS.
BY Eaton & Cole
ATTORNEYS.

B29C 73/305

{specially adapted for toroidal articles, e.g. tyres (B29C 73/325 takes precedence)}

Definition statement

This place covers:

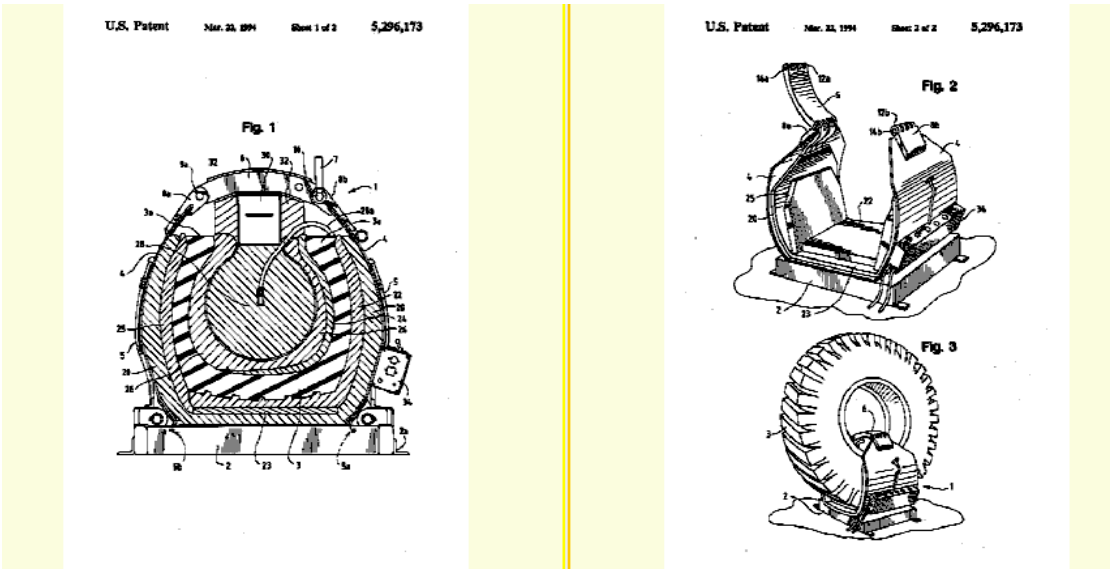

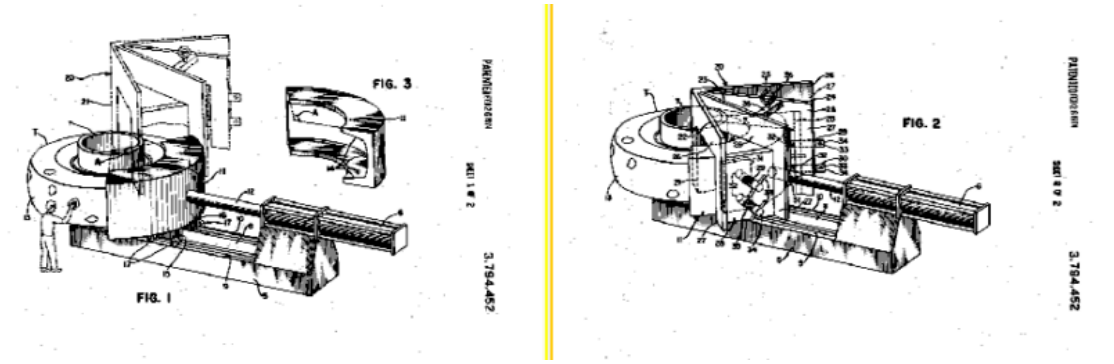

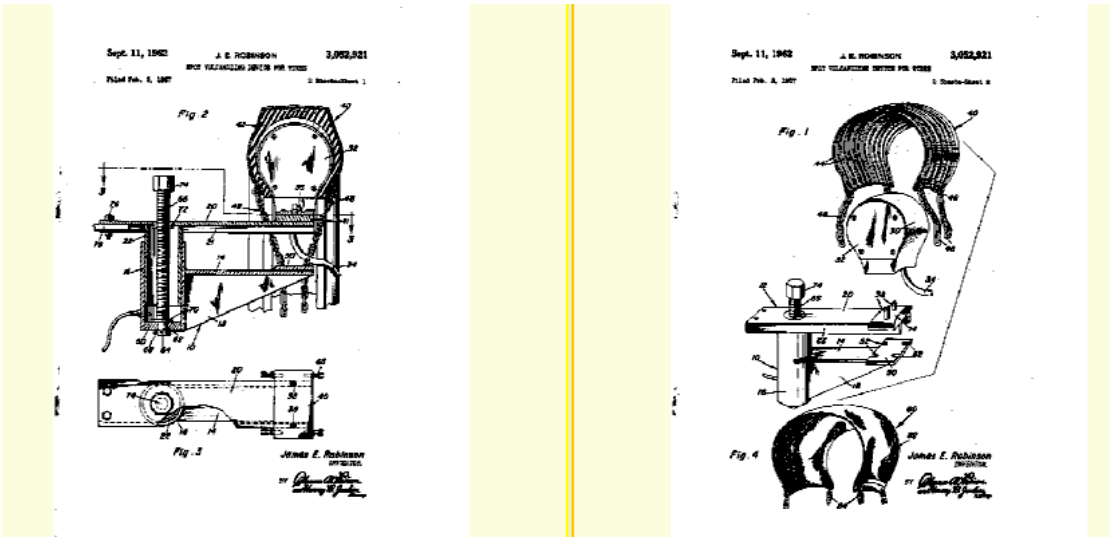

References

Informative references

Attention is drawn to the following places, which may be of interest for search:

Tools for repairing damaged tyres	B60C 25/16

B29C 73/32

using an elastic element, e.g. inflatable bag

Definition statement

This place covers:

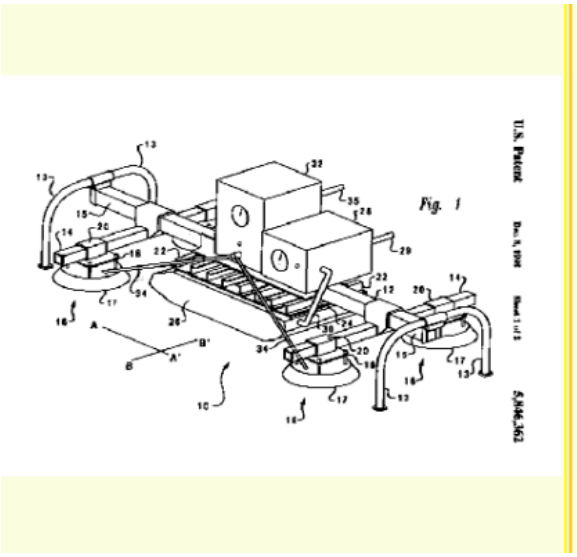

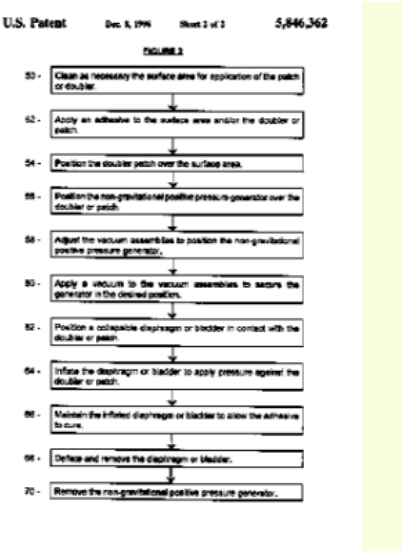

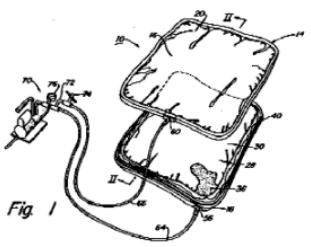

Fig. 1

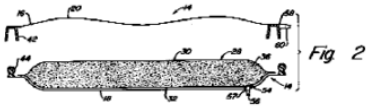

Fig. 2



Fig. 3

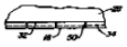

Fig. 4

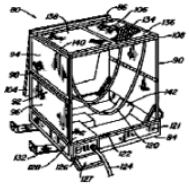

Fig. 5

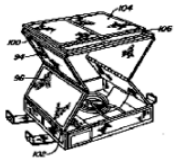

Fig. 6

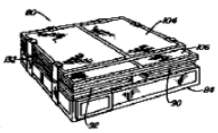

Fig. 7

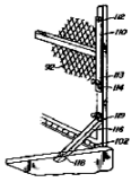

Fig. 8

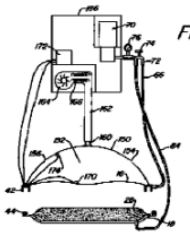

Fig. 9

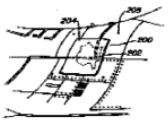

Fig. 10

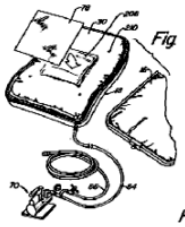

Fig. 11

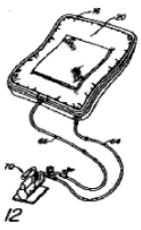

Fig. 12

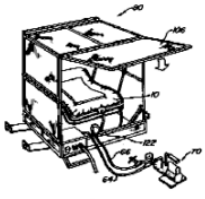

Fig. 13

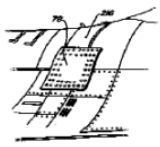

Fig. 14

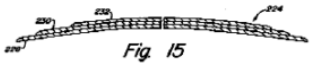

Fig. 15

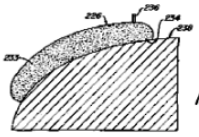

Fig. 16

B29C 73/325

{specially adapted for toroidal articles, e.g. tyres}

Definition statement

This place covers:

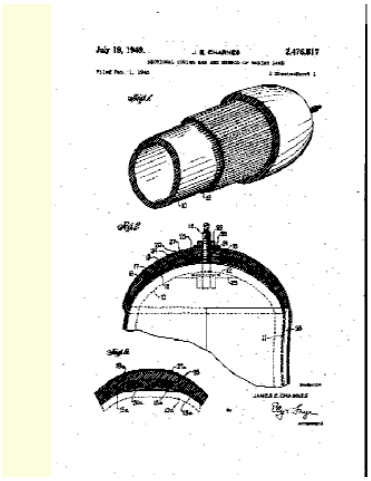

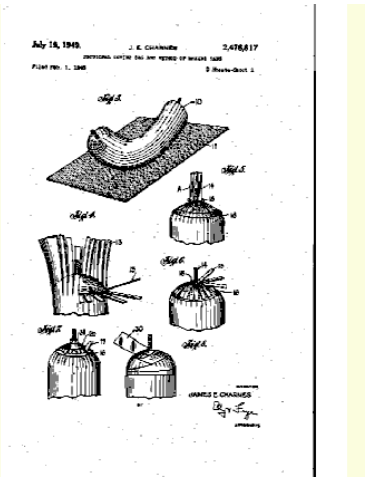

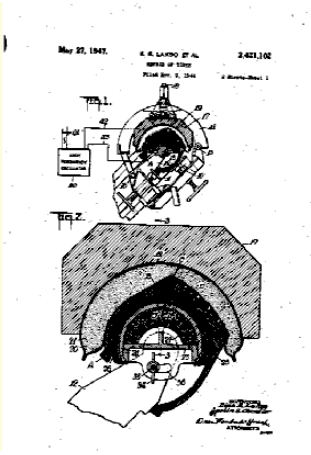

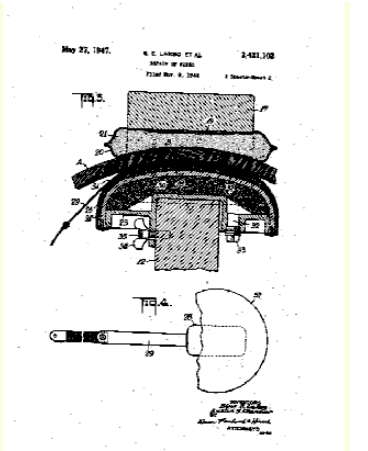

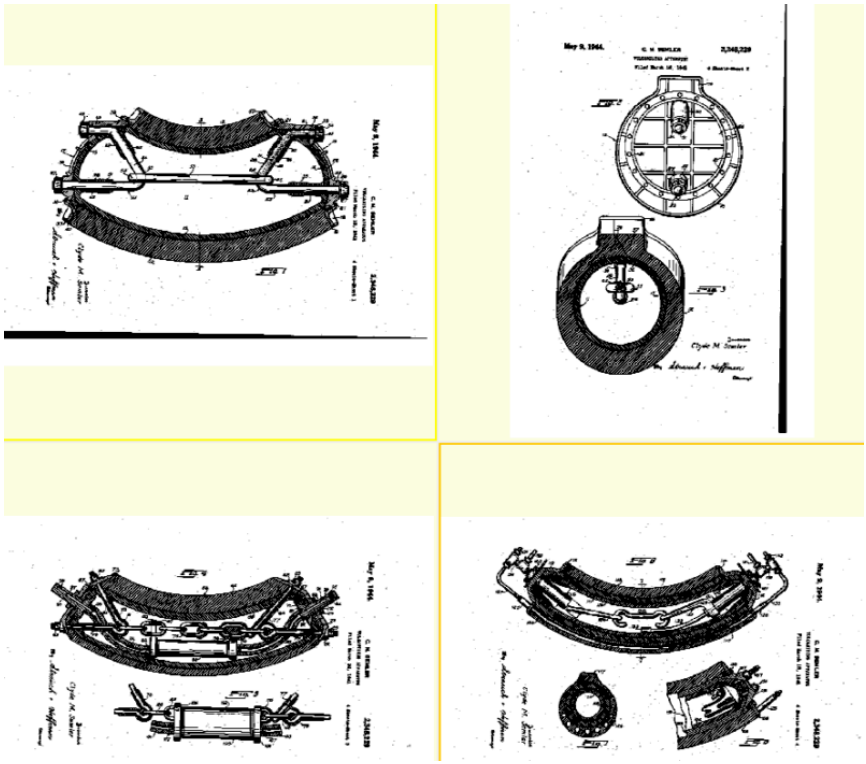

B29C 73/34

for local heating

Definition statement

This place covers:

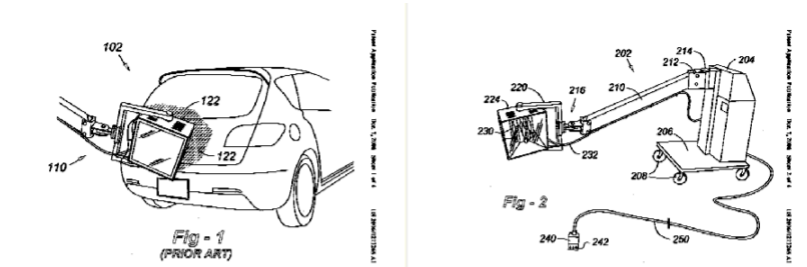

Fig - 1
(PRIOR ART)

Fig - 2

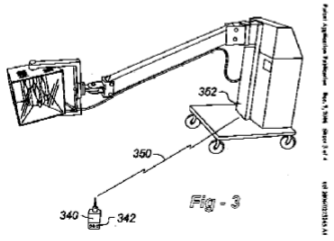

Fig - 3

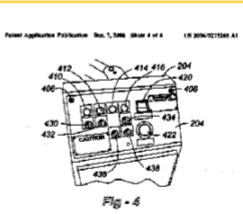

Fig - 4

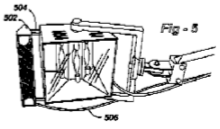

Fig - 5

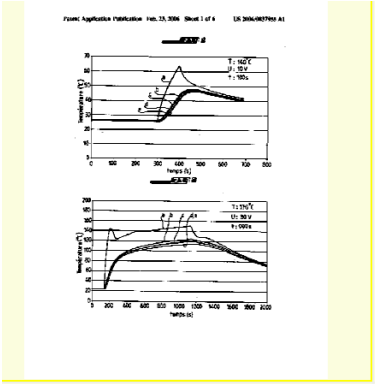

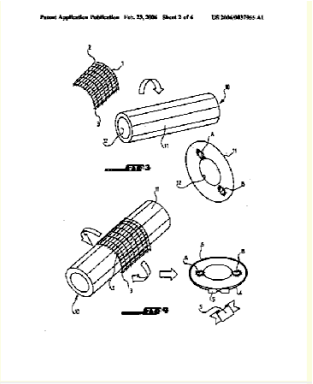

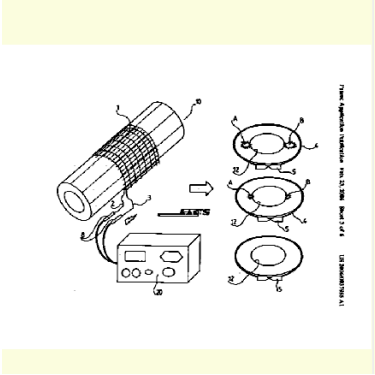

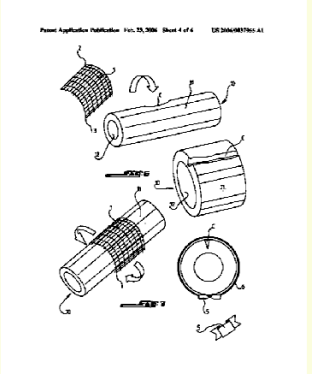

Aug. 13, 1940. F. M. DEUTSCH 2,211,460

HEATING ELEMENT FOR VULCANIZING PATCHES

Original Filed Dec. 28, 1936

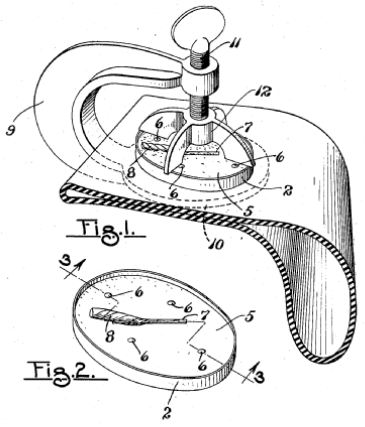

Inventor
Fritz M. Deutsch
By Lawrence and Van Antwerp
Attorneys

B29C 2791/009

Using laser

References

Informative references

Attention is drawn to the following places, which may be of interest for search:

Curing during moulding using laser	B29C 2035/0838
Welding using laser beams	B29C 65/16