B29B

PREPARATION OR PRETREATMENT OF THE MATERIAL TO BE SHAPED; MAKING GRANULES OR PREFORMS; RECOVERY OF PLASTICS OR OTHER CONSTITUENTS OF WASTE MATERIAL CONTAINING PLASTICS

Definition statement

This place covers:

The mechanical preparation of plastic material as raw material used in subsequent plastic shaping techniques which form a final product (B29B 7/00, B29B 9/00, B29B 13/00 and B29B 15/00).

The making of preforms used as an intermediate product which will udergo an additional processing step, e.g. blow moulding, to obtain the final product (B29B 11/00).

The recovery of plastics from waste products in order to reuse it for making new products (B29B 17/00).

References

Limiting references

This place does not cover:

Methods, devices directed to the chemical aspects of the plastic preparation, pretreatment or recovery (e.g. chemical composition, use of specific additives, operating steps intended to modify the properties of the polymer, etc.)	C08J

Informative references

Attention is drawn to the following places, which may be of interest for search:

Mixing in general	B01F
Granulating in general	B01J 2/00
Solid waste disposal	B09B

Special rules of classification

- In this subclass, it is desirable to add the Indexing Codes of subclasses B29K
- Reference is further made to the special rule of classification in the field of B29B 17/00 as far as the application of Indexing Codes as provided in B29L and B29K is concerned.
- Products per se are not classified in this subclass. However, if a product is characterised by the way it is produced and not by its structure or composition, the production method should be classified in this subclass.
- Inventive and additional information disclosed in documents to be classified should be identified by allocation the appropriate classification symbols provided in B29B. In particular attention should be paid to the so called break down Indexing Codes, forming a further subdivision of a group or a subgroup, which are only present at additional information level.

Glossary of terms

In this place, the following terms or expressions are used with the meaning indicated:

A plastic	is defined as a macromolecular compound or composition based on such a compound.

In a plastic state	refers to a state in which the material is more or less easily deformable, locally or as a whole, by force in any direction, to assume and retain any desired shape.

Synonyms and Keywords

In patent documents, the following abbreviations are often used:

Resins	Japanese patent applications usually refer to resins instead of plastics

B29B 7/00

Mixing; Kneading ({for preparation of dough A21C 1/00;} in general B01F; combined with calendering B29C 43/24, with injection B29C 45/46, with extrusion B29C 48/36)

Definition statement

This place covers:

Devices for the preparation of plastics, this preparation only concerning the mechanical aspects of it, i.e. the mixing of the individual components to obtain a homogeneous mass and/or its subsequent mechanical kneading to achieve the desired consistency.

References

Informative references

Attention is drawn to the following places, which may be of interest for search:

Extrusion of plastics	B29C 48/00

Special rules of classification

In this subclass, as a general rule, the type of plastic mixer is to be specified, as well as the specific structural elements which are characteristic of this kind of device.

Additional details of the mixing or kneading device for which no specific classification information can be found in B29B 7/00 are classified under the corresponding sub-groups of B01F (mixing in general).

B29B 7/002

{Methods (chemical aspects C08J 3/00)}

Definition statement

This place covers:

Illustrative example of subject matter classified in B29B 7/002.

EP 0 712 657 A1

FIG. 6

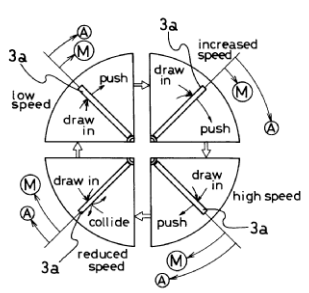

FIG. 7

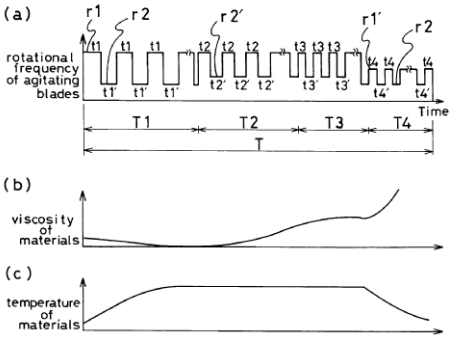

B29B 7/005

{for mixing in batches}

Definition statement

This place covers:

Illustrative example of subject matter classified in B29B 7/005.

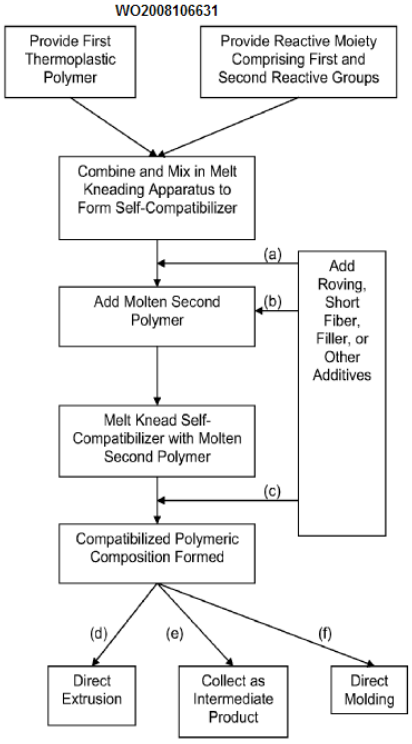

B29B 7/04

with non-movable mixing or kneading devices

Definition statement

This place covers:

Illustrative example of subject matter classified in B29B 7/04.

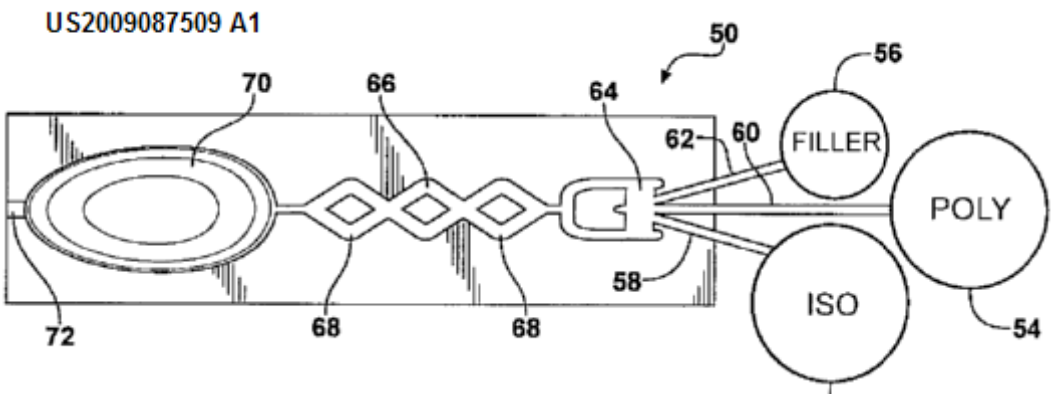

B29B 7/085

{by means of axially movable pistons}

Definition statement

This place covers:

Illustrative example of subject matter classified in B29B 7/085.

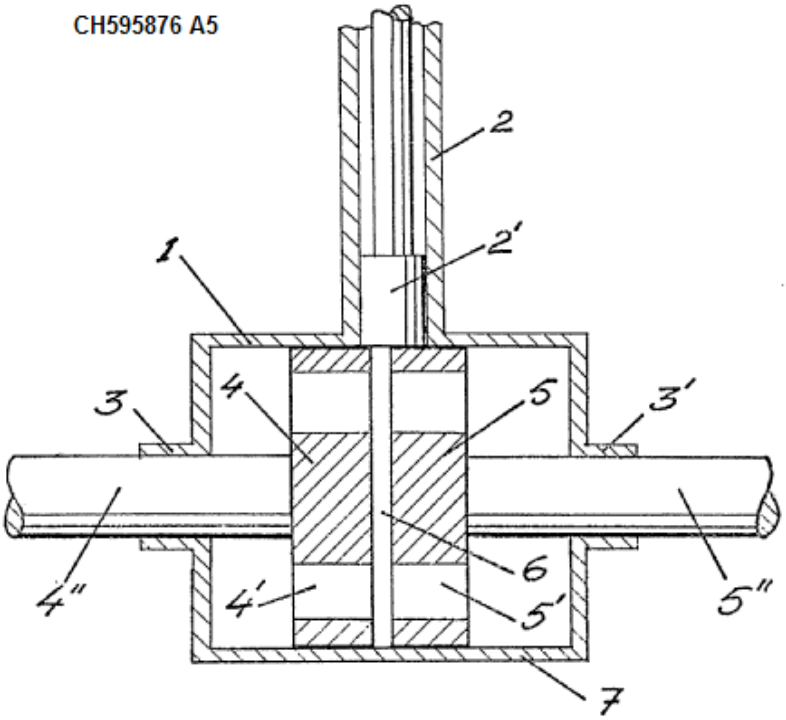

B29B 7/125

{having a casing closely surrounding the rotor, e.g. for masticating rubber (with more than one shaft B29B 7/183); Rotors therefor (B29B 7/14, B29B 7/16 take precedence)}

Definition statement

This place covers:

Illustrative example of subject matter classified in B29B 7/125.

US2295362 A

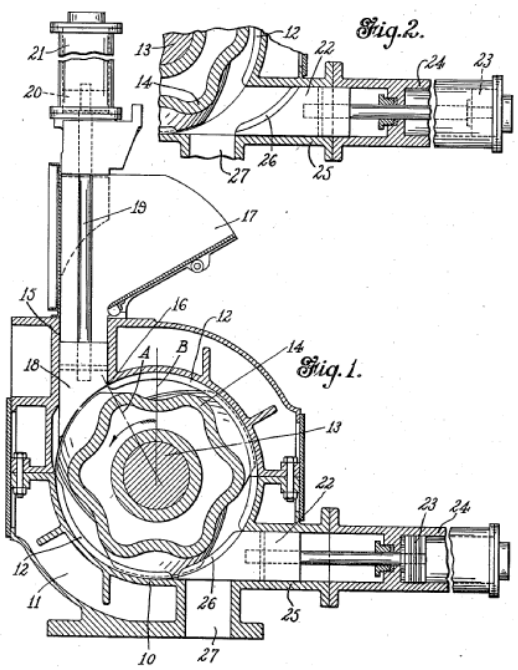

B29B 7/14

with screw or helix

Definition statement

This place covers:

Illustrative example of subject matter classified in B29B 7/14.

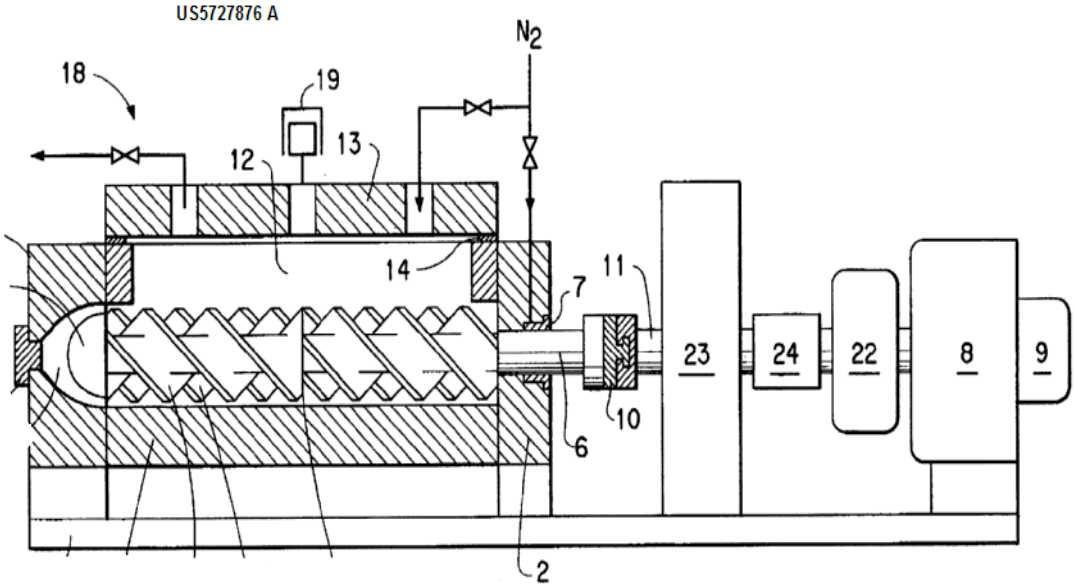

B29B 7/16

with paddles or arms

Definition statement

This place covers:

Illustrative examples of subject matter classified in B29B 7/16.

WO2008098274 A1

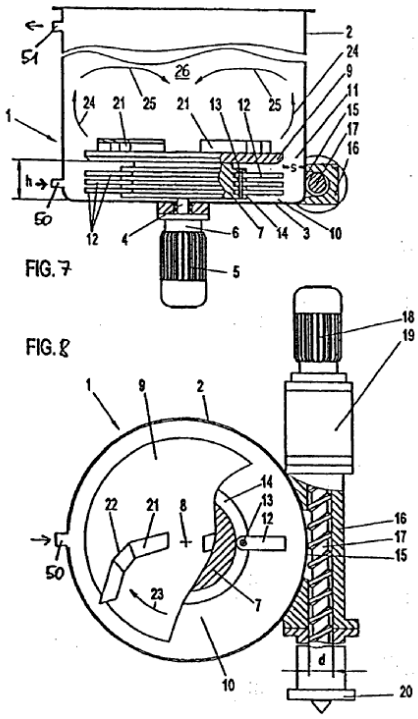

US2004075187 A1

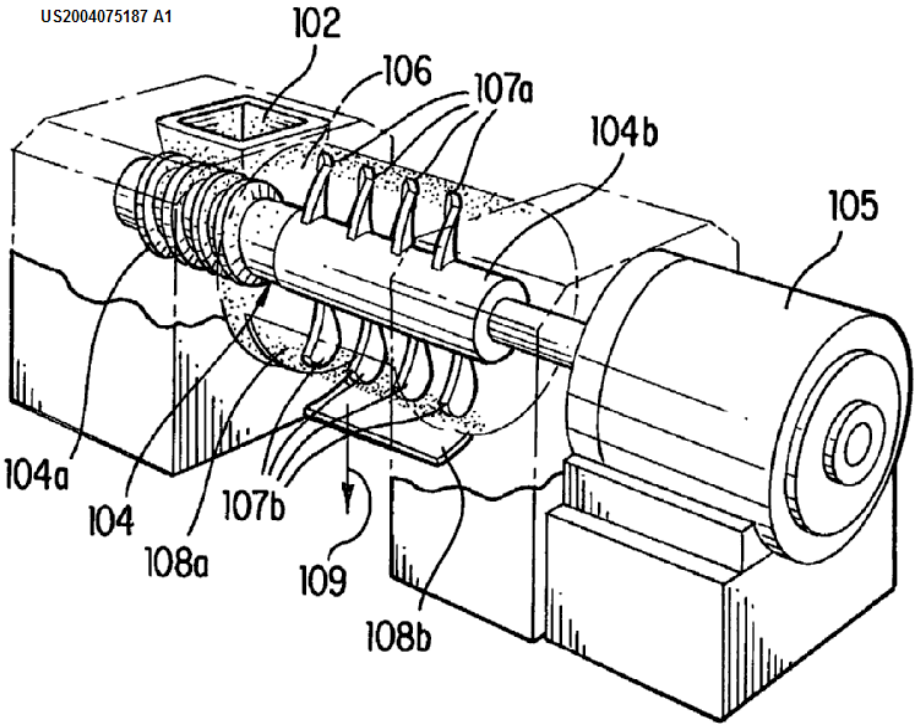

References

Informative references

Attention is drawn to the following places, which may be of interest for search:

Recovery of plastics	B29B 17/00

B29B 7/183

{having a casing closely surrounding the rotors, e.g. of Banbury type (with single shaft B29B 7/125)}

Definition statement

This place covers:

Illustrative example of subject matter classified in B29B 7/183.

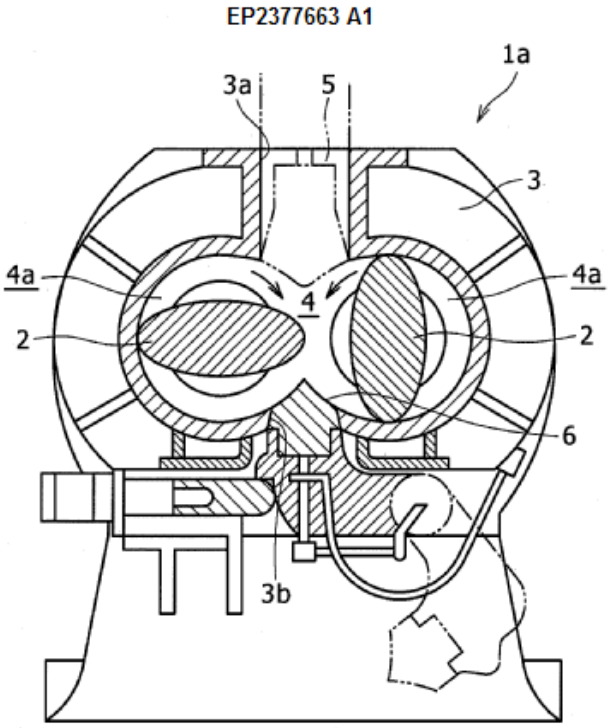

B29B 7/186

{Rotors therefor}

Definition statement

This place covers:

Illustrative example of subject matter classified in B29B 7/186.

EP1661679 A1

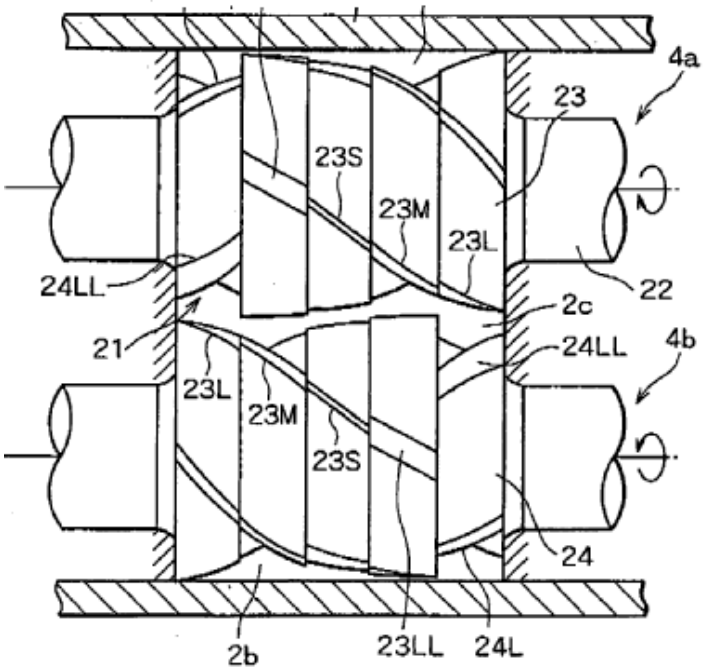

EP1661679 A1

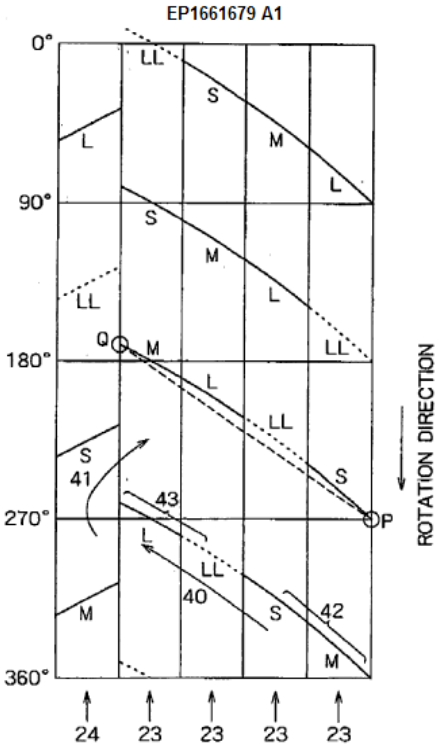

B29B 7/20

with intermeshing devices, e.g. screws

Definition statement

This place covers:

Illustrative example of subject matter classified in B29B 7/20.

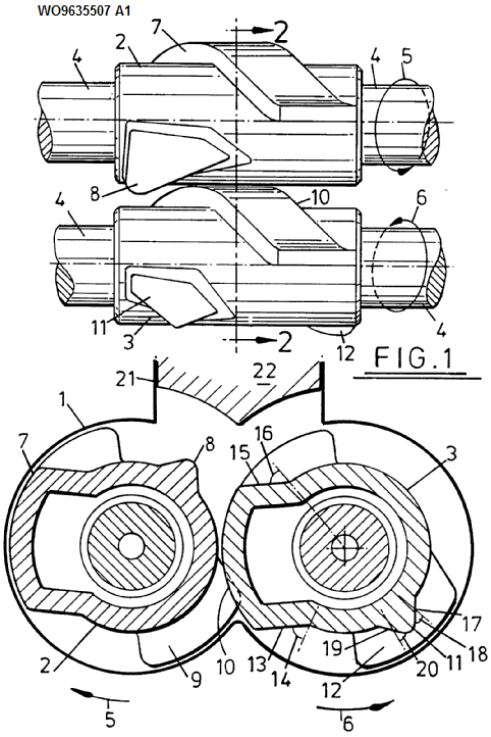

B29B 7/246

{in mixers having more than one rotor and a casing closely surrounding the rotors, e.g. with feeding plungers}

Definition statement

This place covers:

Illustrative example of subject matter classified in B29B 7/246.

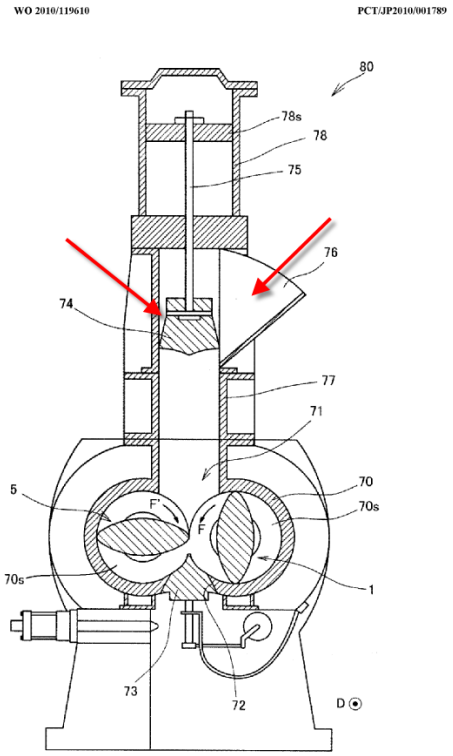

B29B 7/248

{with plungers for introducing the material, e.g. from below (B29B 7/246 takes precedence)}

Definition statement

This place covers:

Illustrative example of subject matter classified in B29B 7/248.

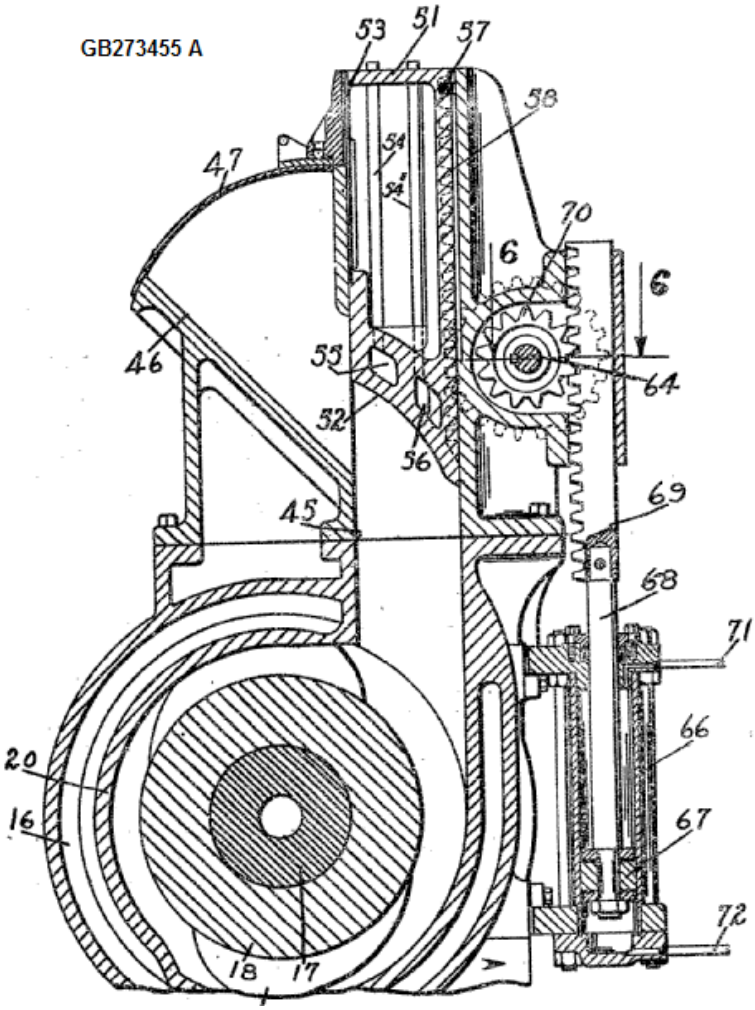

B29B 7/263

{from the underside in mixers having more than one rotor and a a casing closely surrounding the rotors}

Definition statement

This place covers:

Illustrative example of subject matter classified in B29B 7/263.

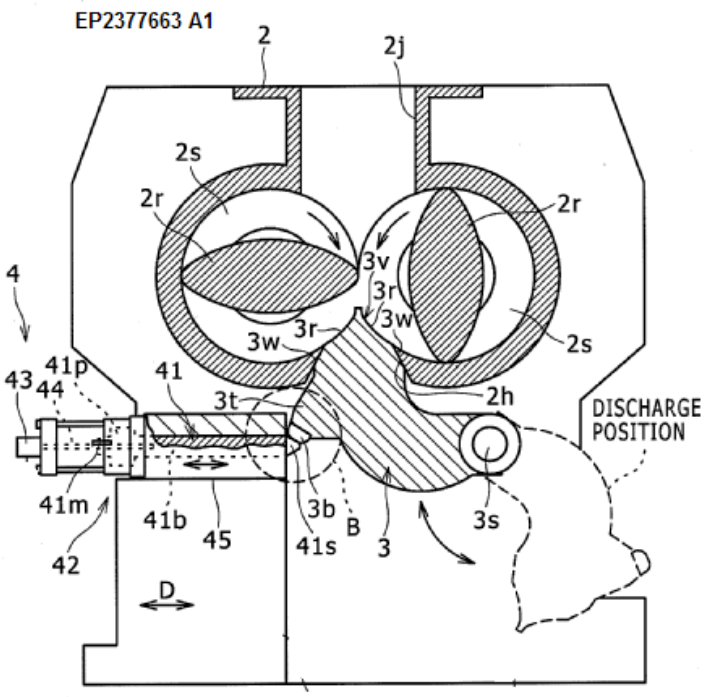

B29B 7/266

{using sliding doors}

Definition statement

This place covers:

Illustrative example of subject matter classified in B29B 7/266.

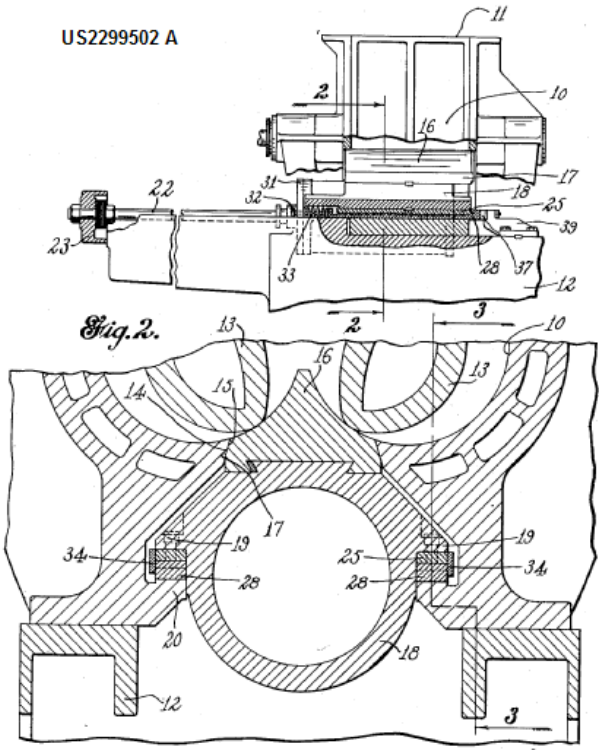

B29B 7/32

with non-movable mixing or kneading devices

Definition statement

This place covers:

Illustrative example of subject matter classified in B29B 7/32.

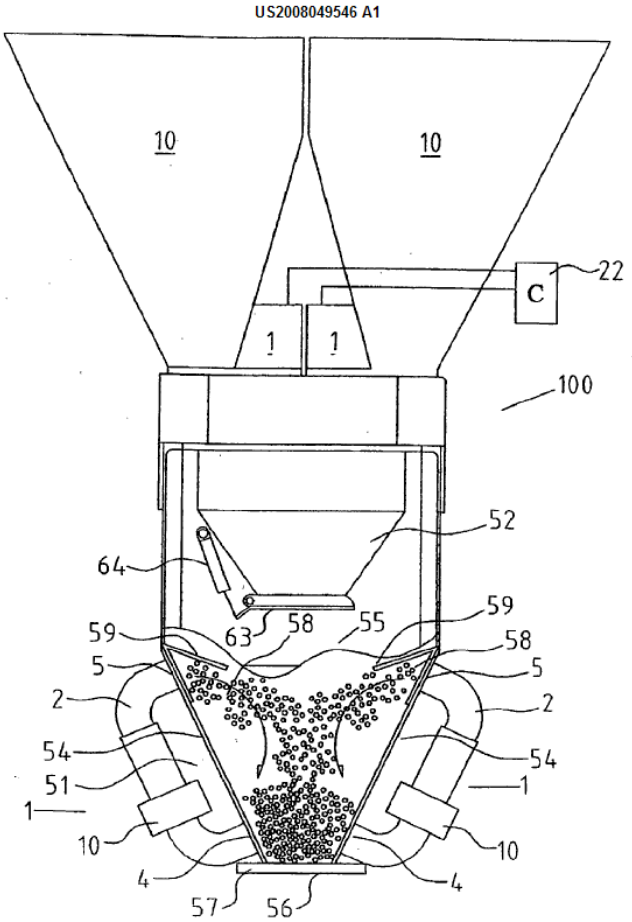

B29B 7/325

{Static mixers (in general B01F 5/0602)}

Definition statement

This place covers:

Illustrative example of subject matter classified in B29B 7/325.

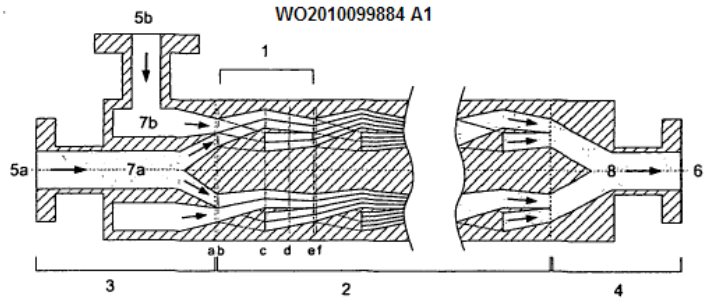

Fig. 1a

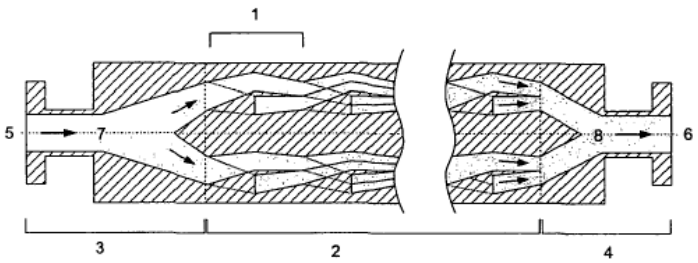

Fig. 1b

B29B 7/36

shaking, oscillating or vibrating

Definition statement

This place covers:

Illustrative examples of subject matter classified in B29B 7/36.

US2008123466 A1

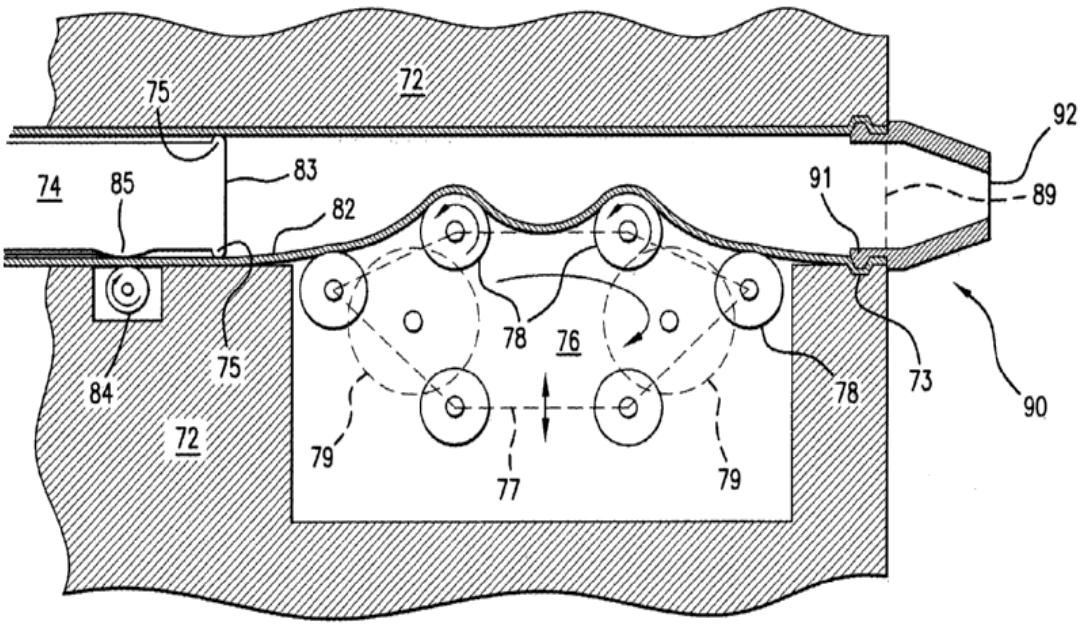

WO2007145918 A2

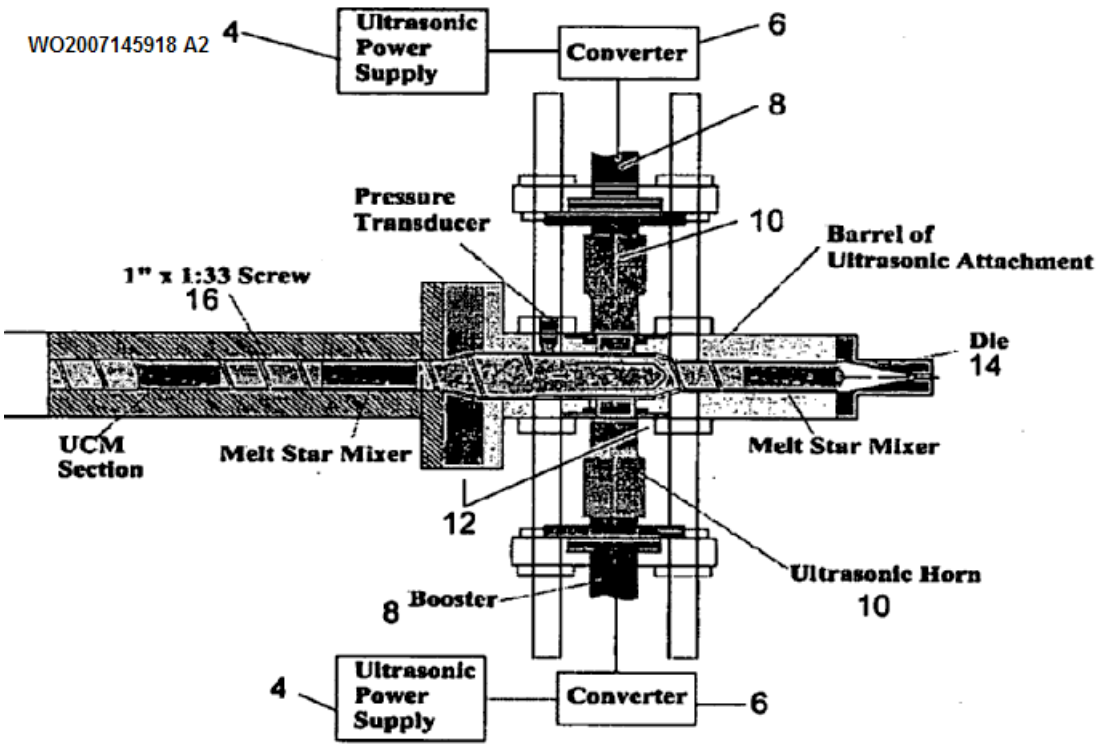

B29B 7/401

{having a casing closely surrounding the rotor, e.g. with a plunger for feeding the material (B29B 7/407, B29B 7/42 take precedence)}

Definition statement

This place covers:

Illustrative example of subject matter classified in B29B 7/401.

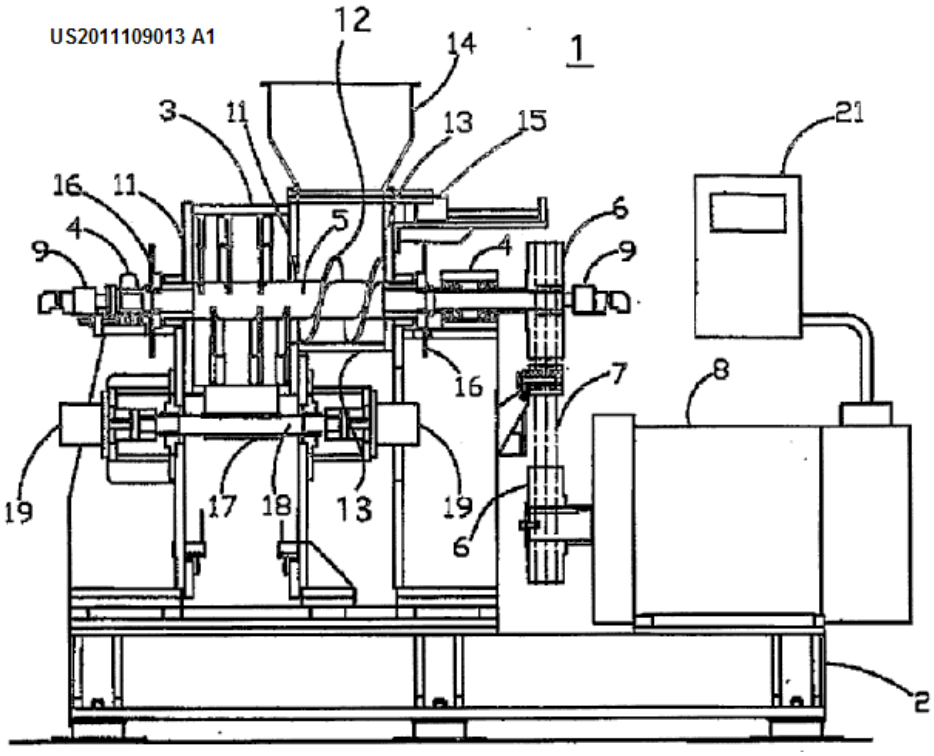

B29B 7/402

{using a rotor-stator system with intermeshing elements, e.g. teeth (B29B 7/408, B29B 7/404 take precedence)}

Definition statement

This place covers:

Illustrative example of subject matter classified in B29B 7/402.

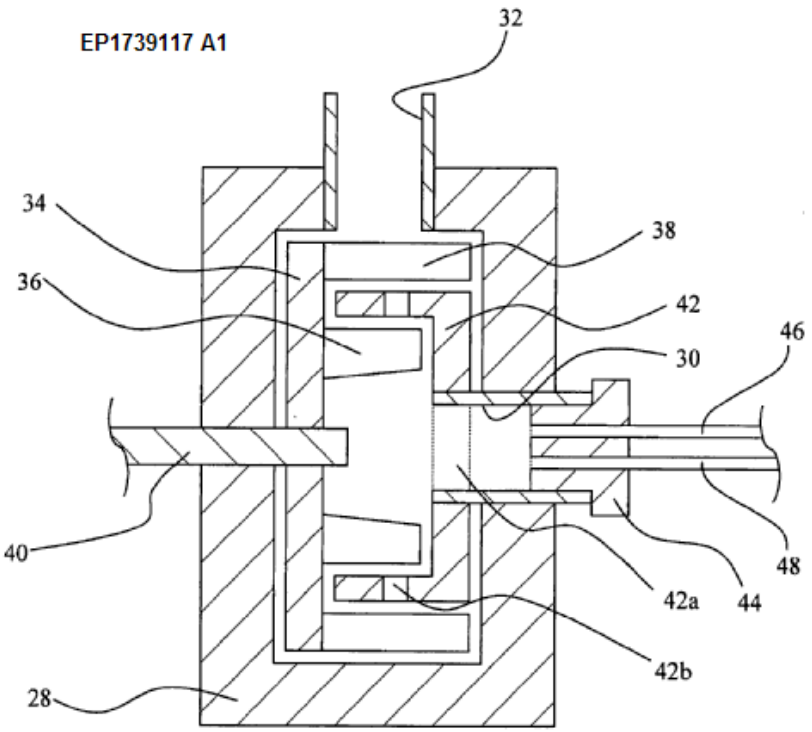

B29B 7/404

{with feeding or valve actuating means, e.g. with cleaning means}

Definition statement

This place covers:

Illustrative example of subject matter classified in B29B 7/404.

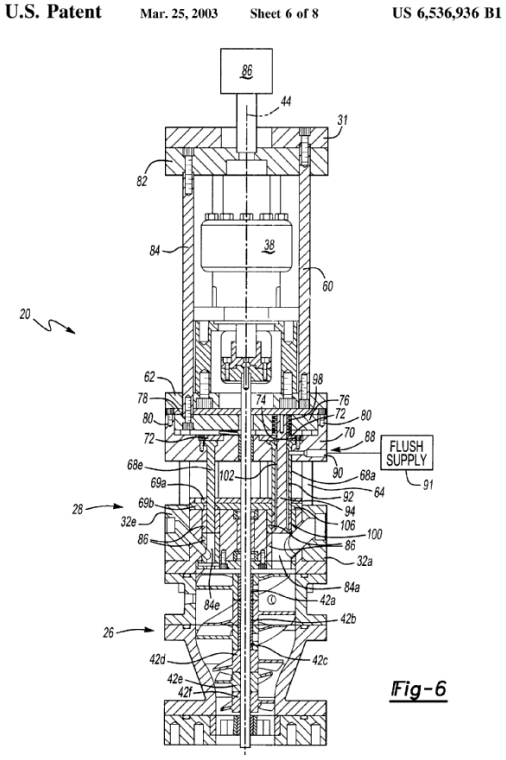

B29B 7/407

{with a casing closely surrounding the rotor, e.g. with conical rotor}

Definition statement

This place covers:

Illustrative example of subject matter classified in B29B 7/407.

DE 10 2008 044 871 A1 2010.03.04

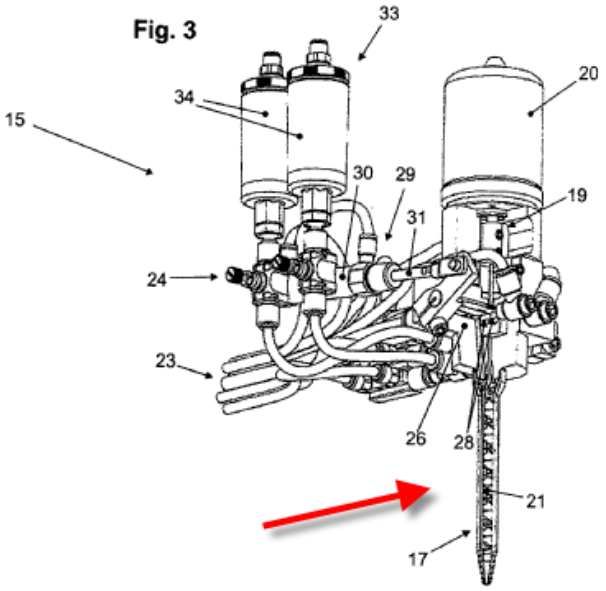

B29B 7/408

{with mixing elements on a rotor co-operating with mixing elements, perpendicular to the axis of the rotor, fixed on a stator}

Definition statement

This place covers:

Illustrative example of subject matter classified in B29B 7/408.

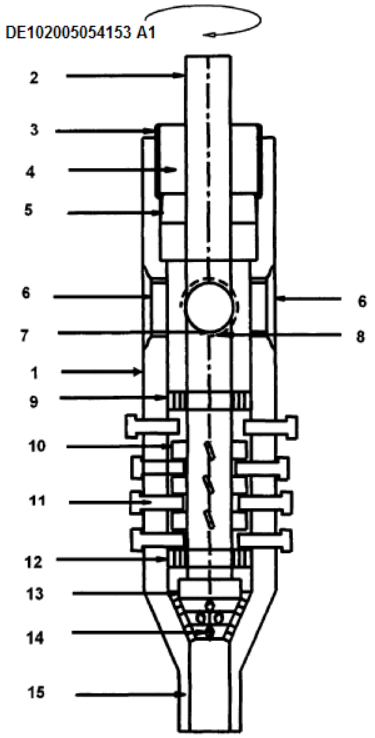

B29B 7/422

{with screw sections co-operating, e.g. intermeshing, with elements on the wall of the surrounding casing}

Definition statement

This place covers:

Illustrative example of subject matter classified in B29B 7/422.

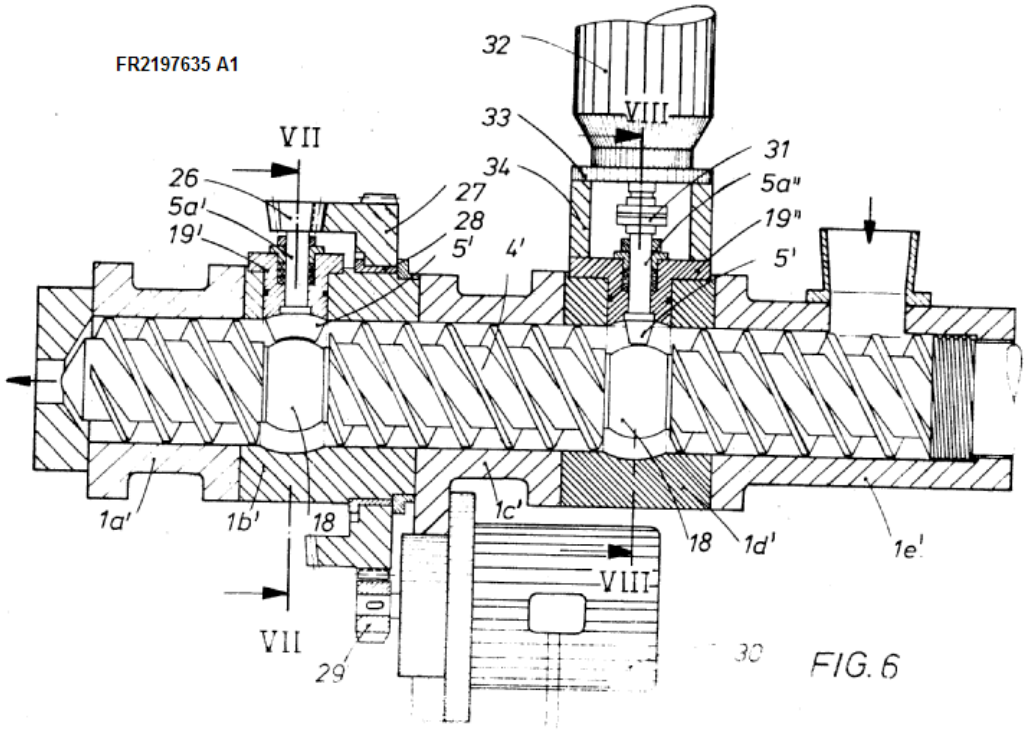

FIG. 6

B29B 7/423

{and oscillating axially (in general B01F 11/0057)}

Definition statement

This place covers:

Illustrative example of subject matter classified in B29B 7/423.

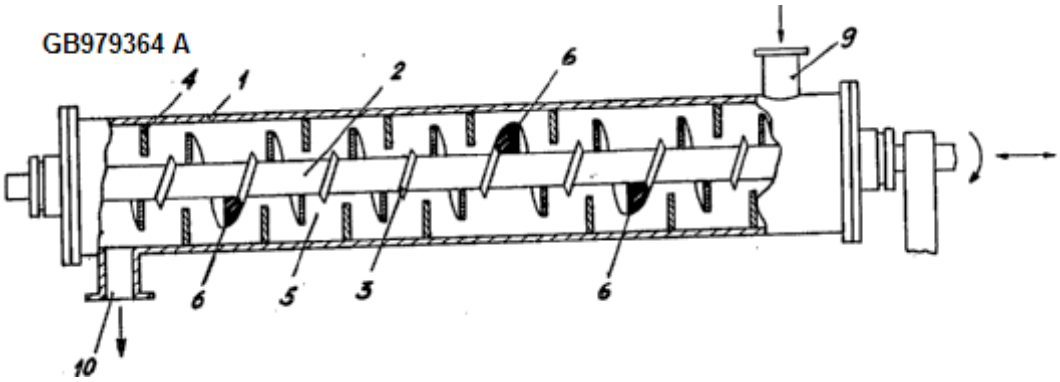

B29B 7/424

{with conical screw surrounded by conical casing}

Definition statement

This place covers:

Illustrative example of subject matter classified in B29B 7/424.

EP0307562 A2

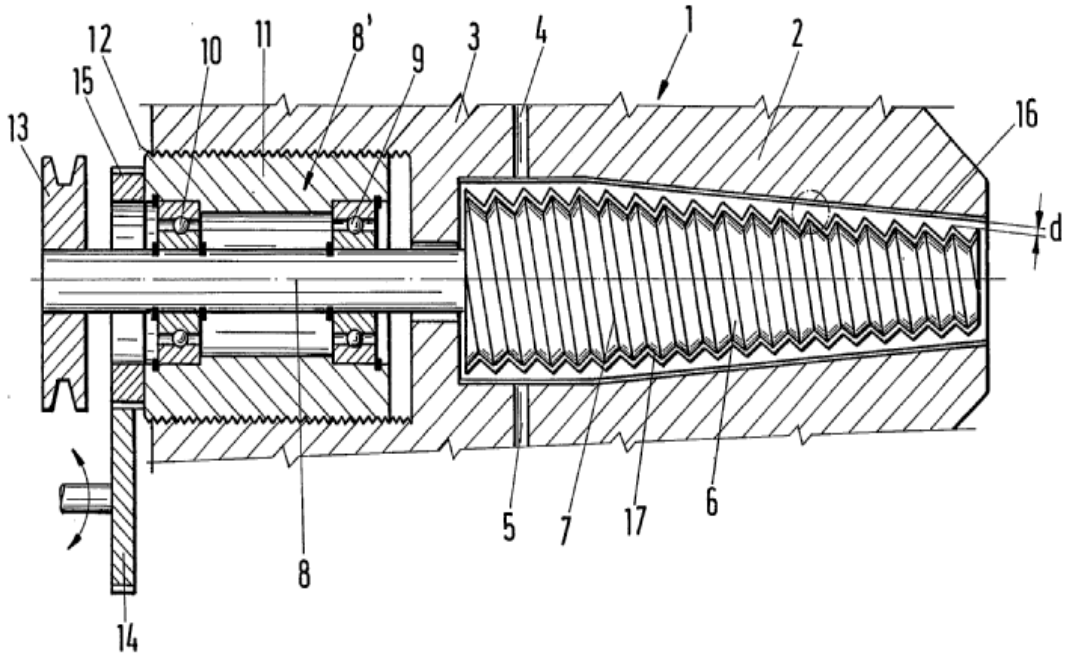

B29B 7/425

{with screw surrounded by a casing provided with grooves or cavities}

Definition statement

This place covers:

Illustrative example of subject matter classified in B29B 7/425.

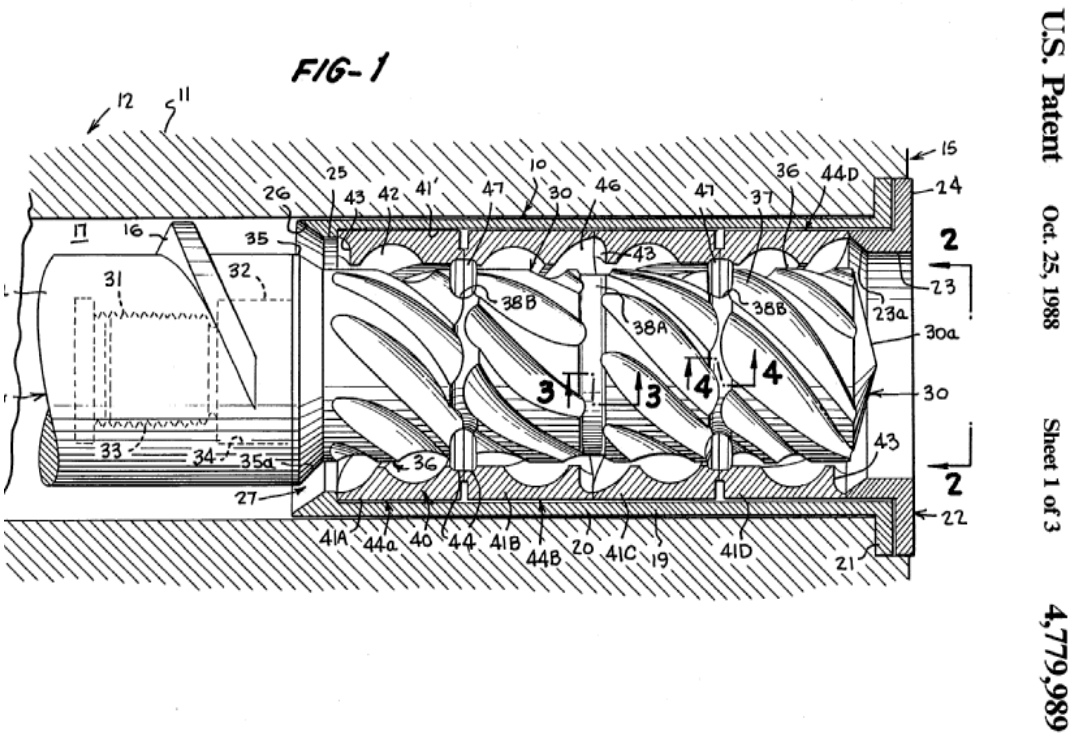

B29B 7/426

{with consecutive casings or screws, e.g. for charging, discharging, mixing}

Definition statement

This place covers:

Illustrative example of subject matter classified in B29B 7/426.

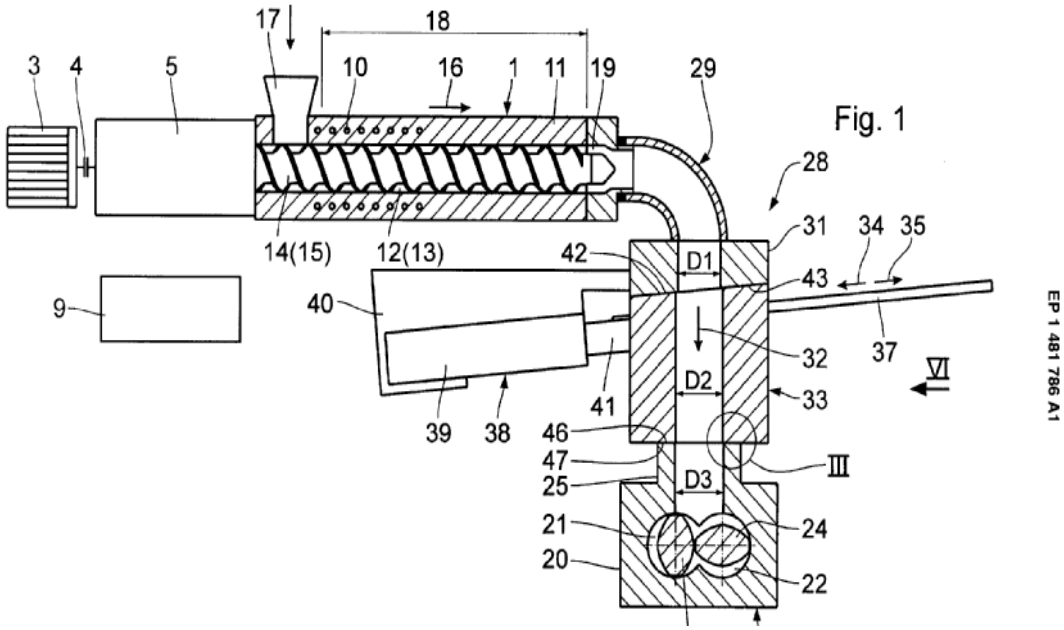

B29B 7/427

{with independently driven screws rotating about the same axis, e.g. oscillating axially; with axially oscillating screws (B29B 7/423 takes precedence)}

Definition statement

This place covers:

Illustrative example of subject matter classified in B29B 7/427.

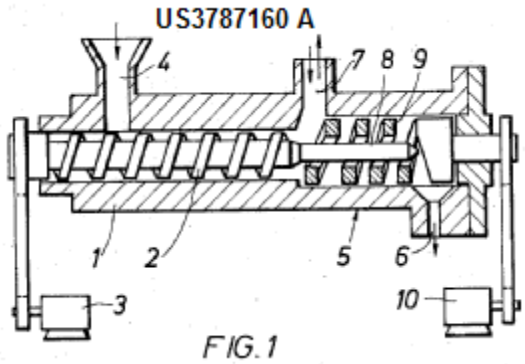

B29B 7/44

with paddles or arms

Definition statement

This place covers:

Illustrative example of subject matter classified in B29B 7/44.

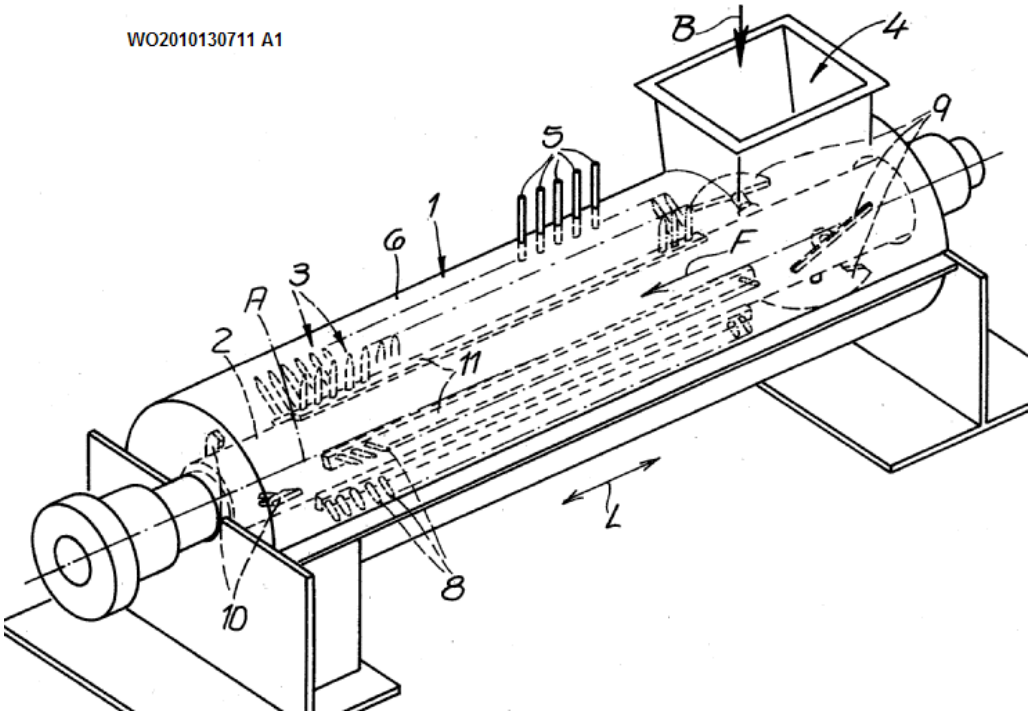

B29B 7/465

{each shaft comprising rotor parts of the Banbury type in addition to screw parts}

Definition statement

This place covers:

Illustrative example of subject matter classified in B29B 7/465.

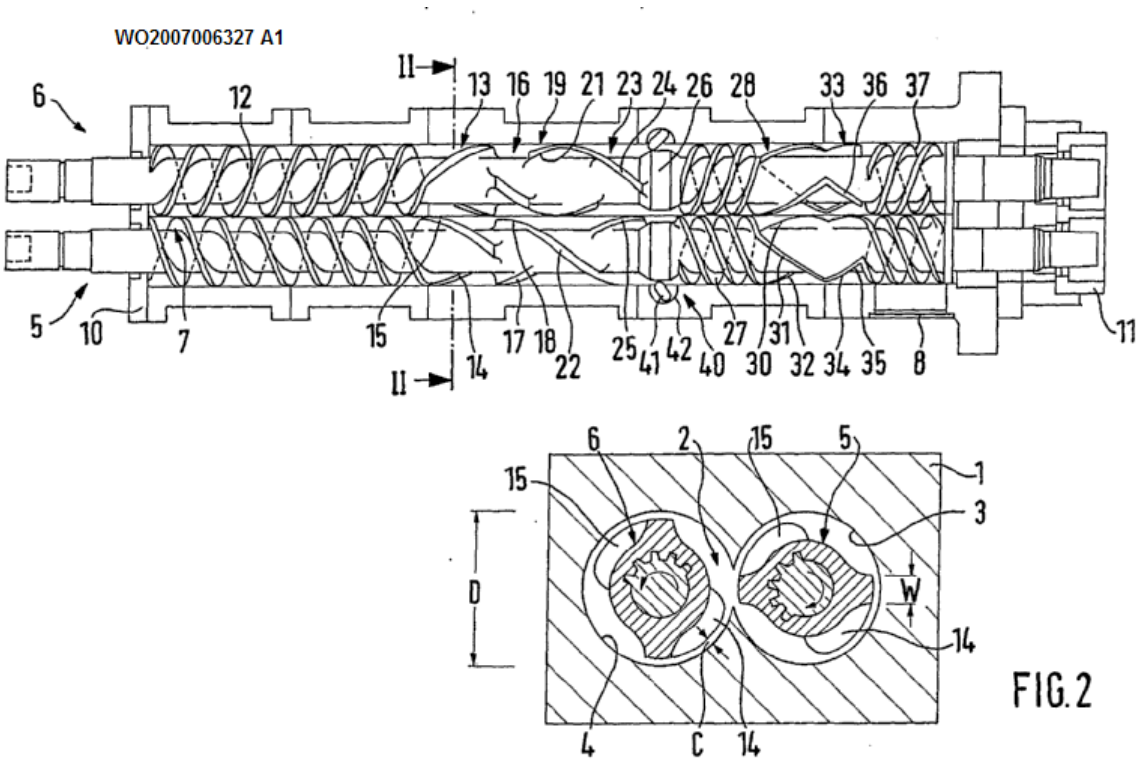

B29B 7/48

with intermeshing devices, e.g. screws

Definition statement

This place covers:

Illustrative example of subject matter classified in B29B 7/48.

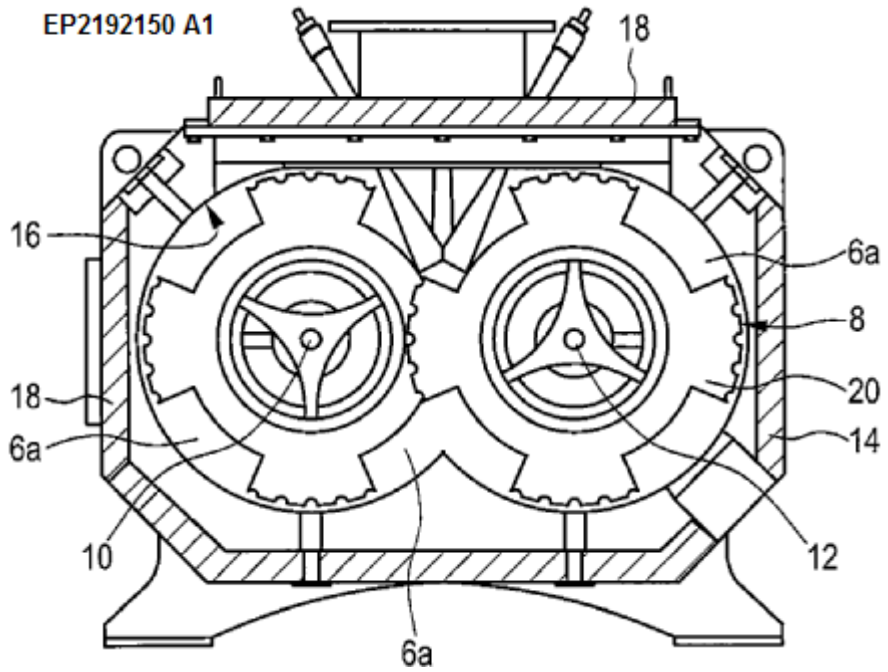

B29B 7/481

{provided with paddles, gears or discs (B29B 7/482 takes precedence)}

Definition statement

This place covers:

Illustrative examples of subject matter classified in B29B 7/481.

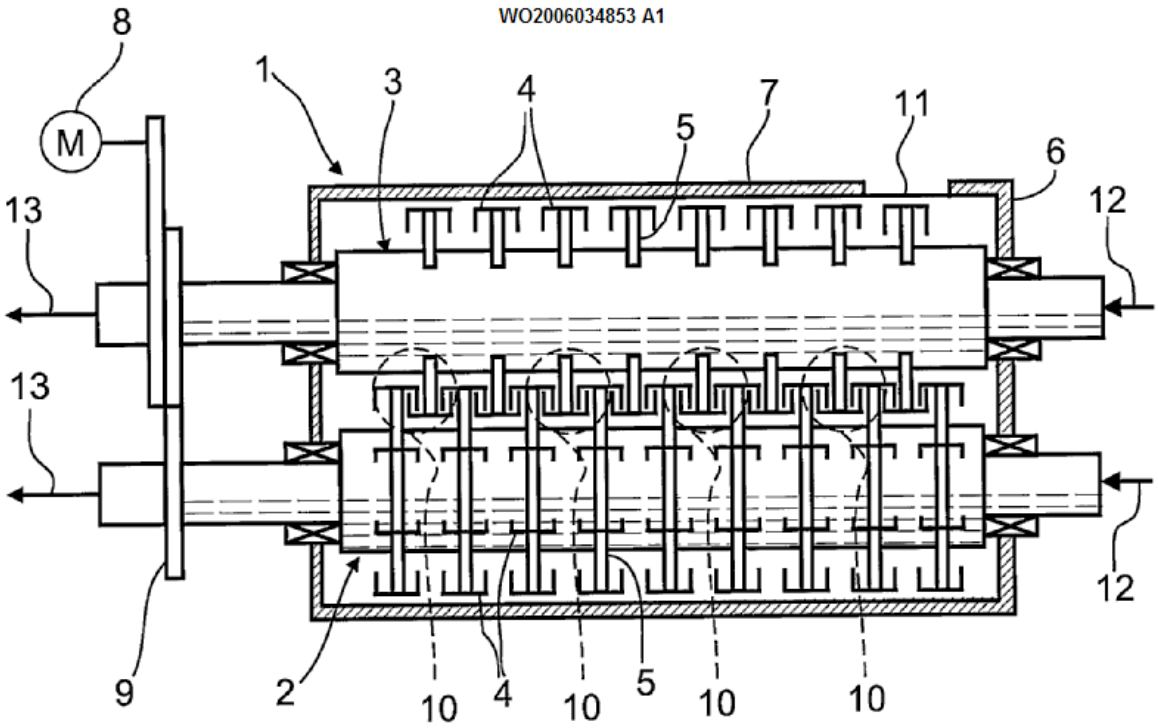

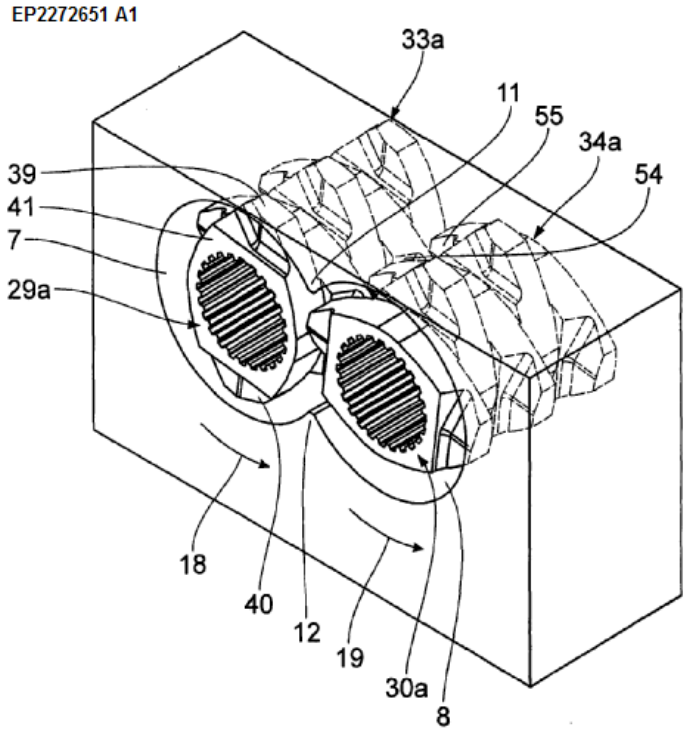

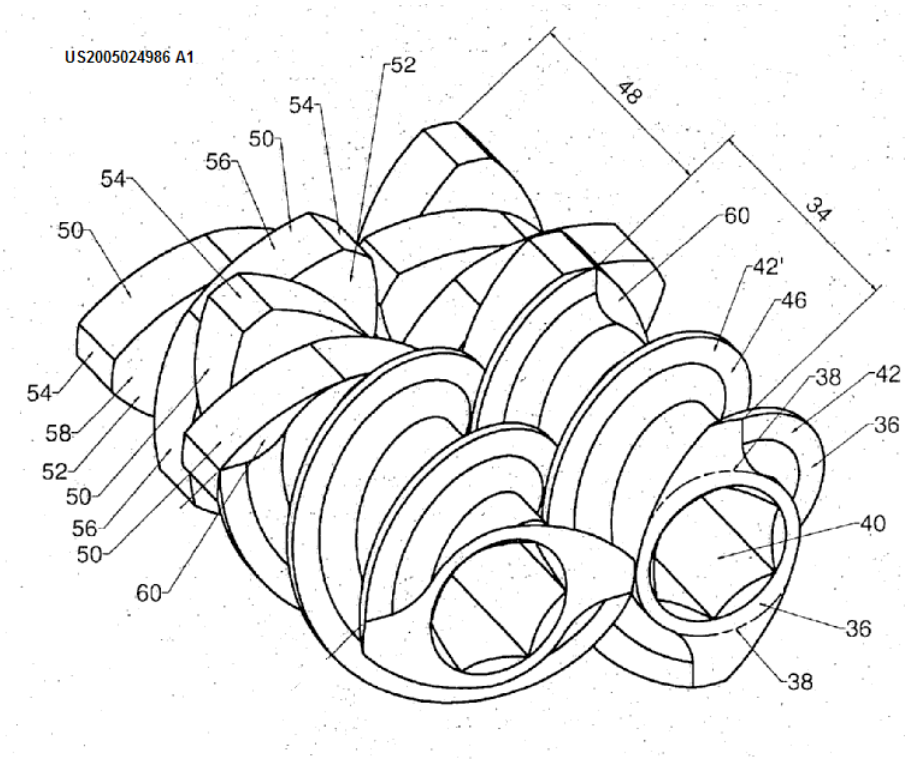

B29B 7/482

{provided with screw parts in addition to other mixing parts, e.g. paddles, gears, discs}

Definition statement

This place covers:

Illustrative examples of subject matter classified in B29B 7/482.

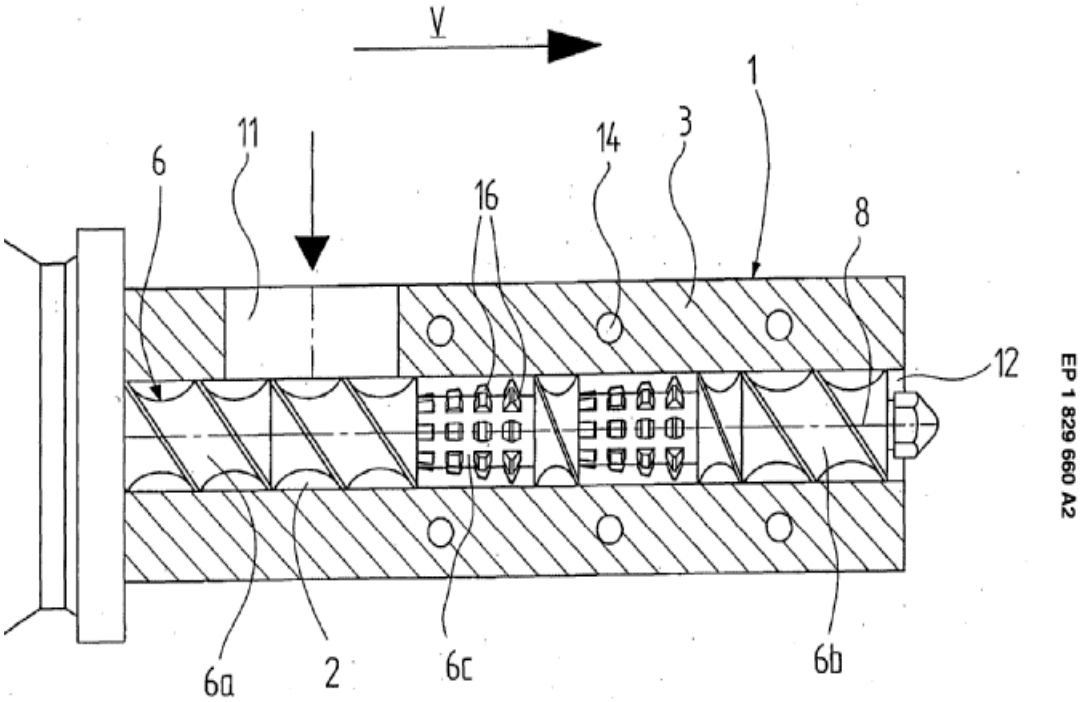

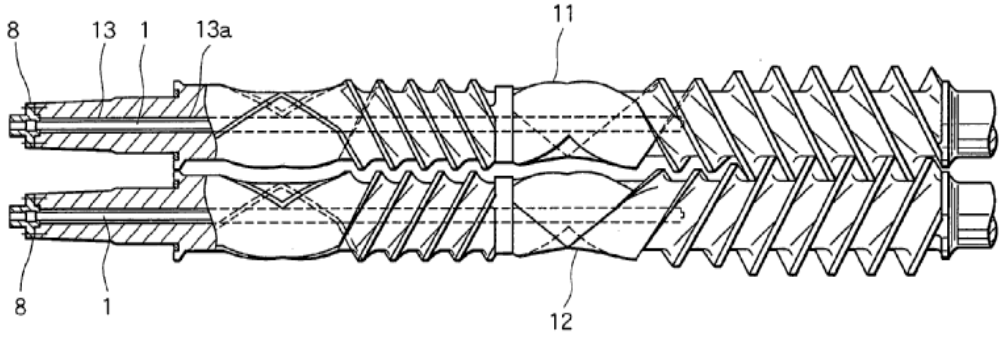

EP 1 479 504 A1

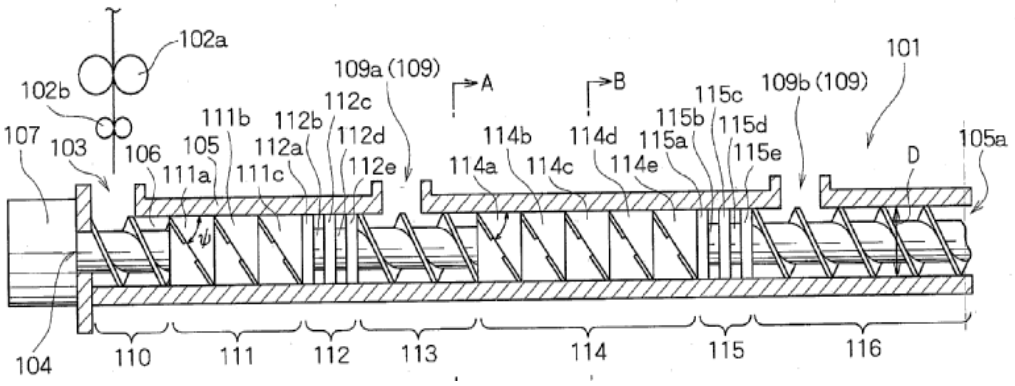

EP 1 316 399 A2

B29B 7/483

{the other mixing parts being discs perpendicular to the screw axis}

Definition statement

This place covers:

Illustrative example of subject matter classified in B29B 7/483.

EP 0 778 078 A1

Fig. 13

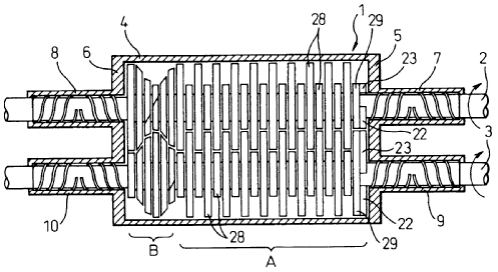

Fig. 14A

Fig. 14B

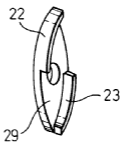

B29B 7/484

{with two shafts provided with screws, e.g. one screw being shorter than the other (B29B 7/482 takes precedence)}

Definition statement

This place covers:

Illustrative example of subject matter classified in - B29B 7/484.

JP62080007 A

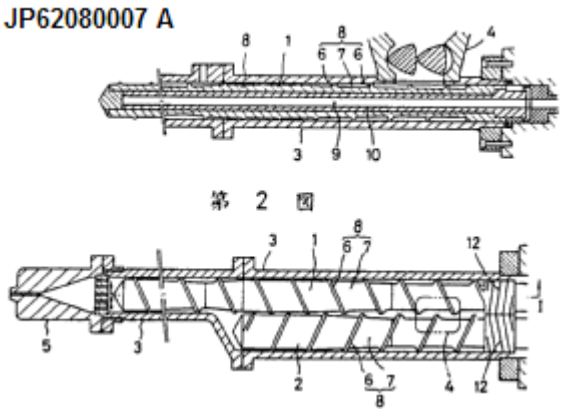

B29B 7/485

{with three or more shafts provided with screws}

Definition statement

This place covers:

Illustrative example of subject matter classified in B29B 7/485.

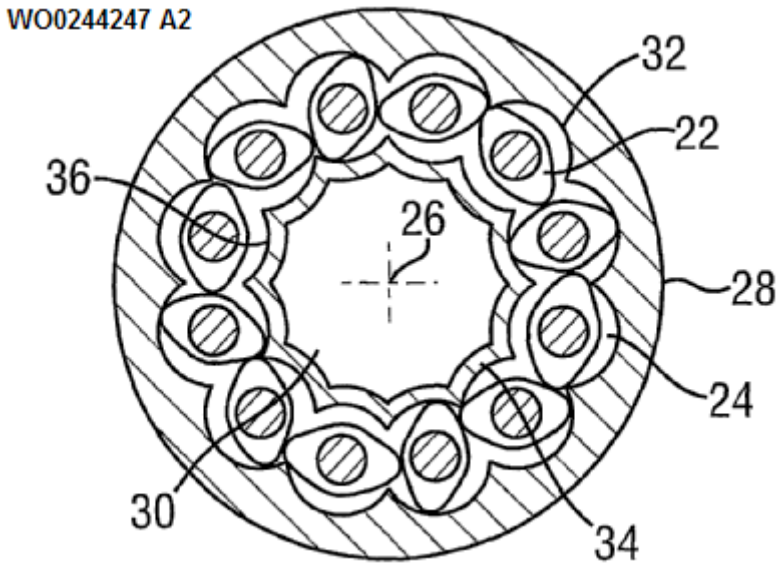

B29B 7/486

{with screws surrounded by a casing provided with grooves or cavities}

Definition statement

This place covers:

Illustrative example of subject matter classified in B29B 7/486.

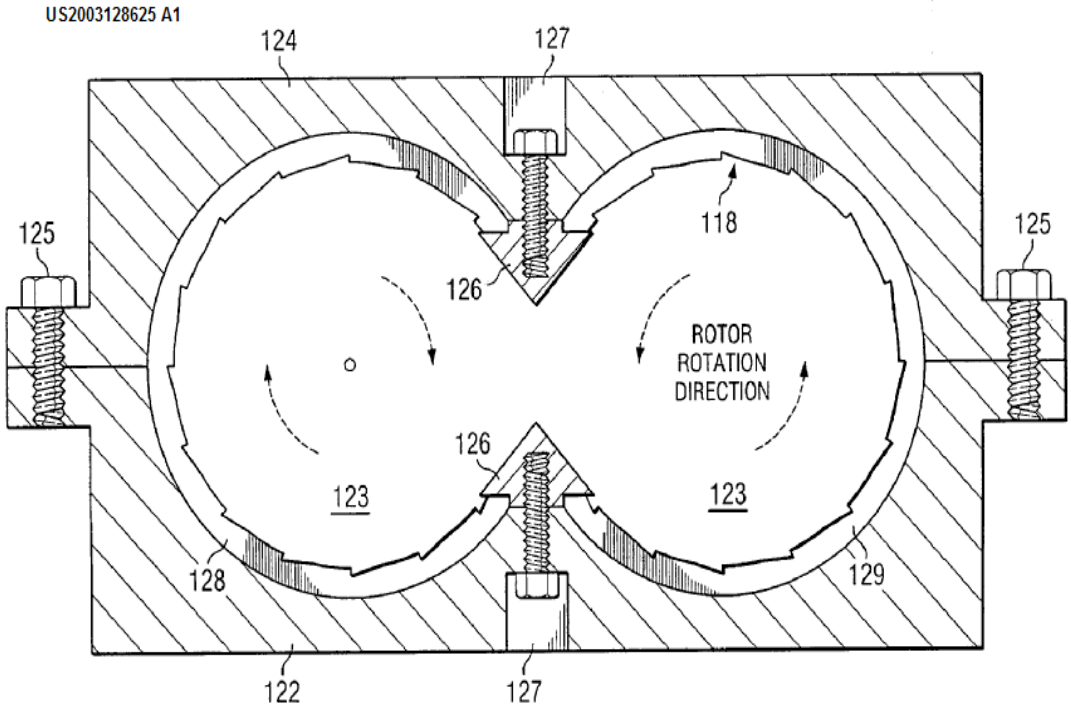

B29B 7/487

{with consecutive casings or screws, e.g. for feeding, discharging, mixing}

Definition statement

This place covers:

Illustrative example of subject matter classified in B29B 7/487.

EP 1 473 137 A1

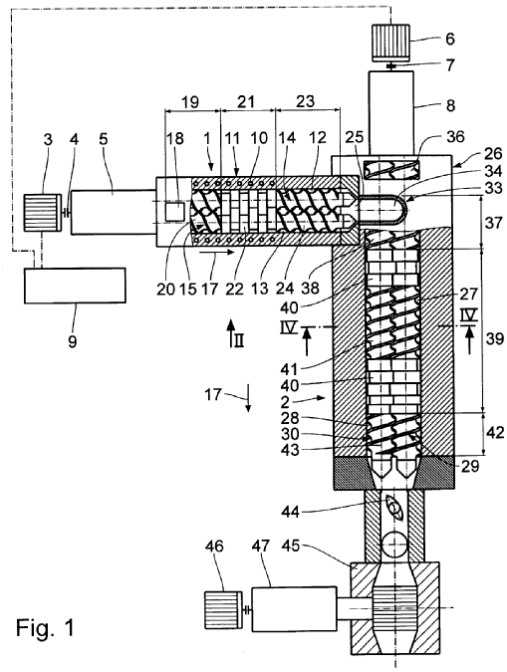

Fig. 1

B29B 7/489

{Screws (B29B 7/482 takes precedence)}

Definition statement

This place covers:

Illustrative example of subject matter classified in B29B 7/489.

DE 10 2008 029 305 A1 2009.12.24

Anhängende Zeichnungen

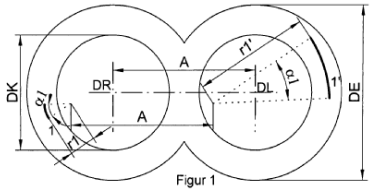

Figur 1

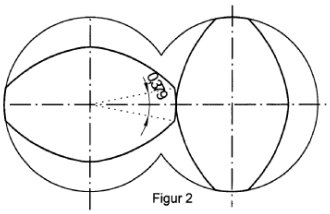

Figur 2

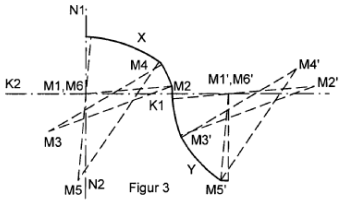

Figur 3

B29B 7/523

{co-operating with casings}

Definition statement

This place covers:

Illustrative example of subject matter classified in B29B 7/523.

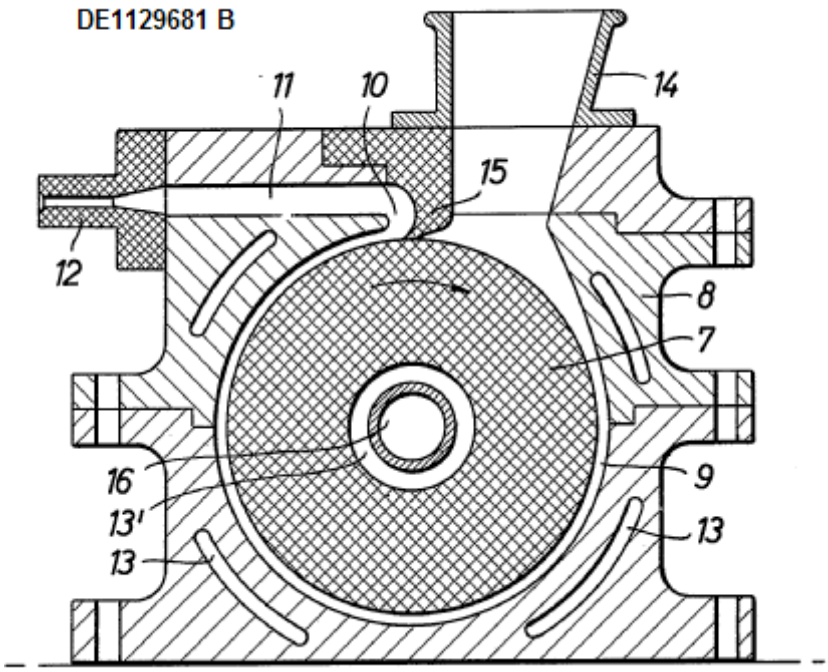

B29B 7/526

{with two or more rollers}

Definition statement

This place covers:

Illustrative example of subject matter classified in B29B 7/526.

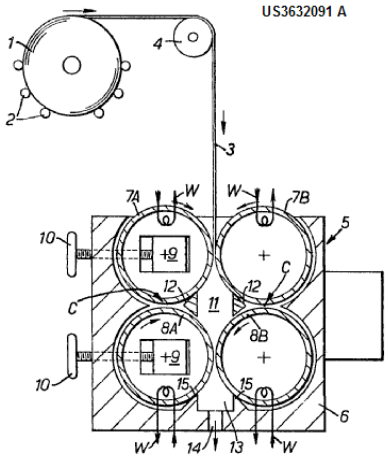

FIG. 1.

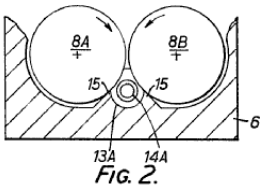

FIG. 2.

B29B 7/54

with a single roller co-operating with a stationary member {other than the casing}

Definition statement

This place covers:

Illustrative example of subject matter classified in B29B 7/54.

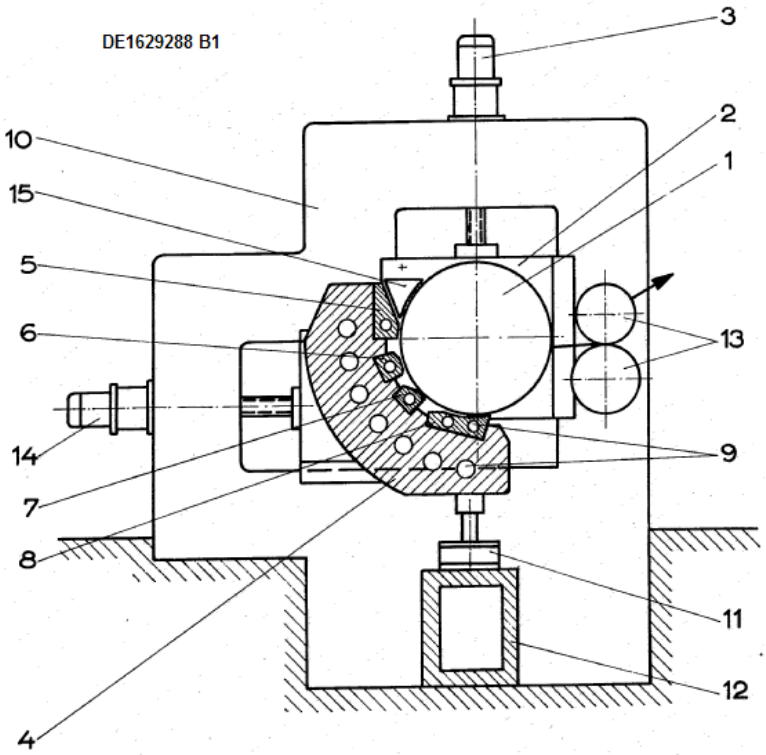

B29B 7/56

with co-operating rollers {, e.g. with repeated action, i.e. the material leaving a set of rollers being reconducted to the same set or being conducted to a next set}

Definition statement

This place covers:

Illustrative example of subject matter classified in B29B 7/56.

EP 0 637 745 A1

FIG.2

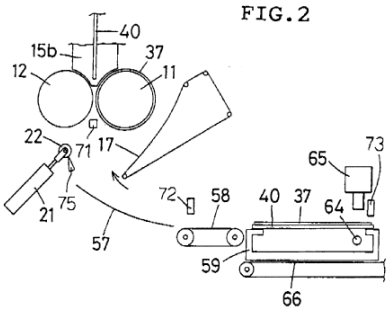

FIG.3

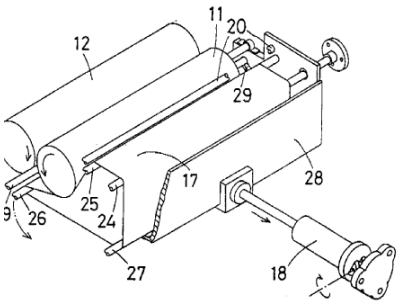

B29B 7/562

{with means for axially moving the material on the rollers}

Definition statement

This place covers:

Illustrative example of subject matter classified in B29B 7/562.

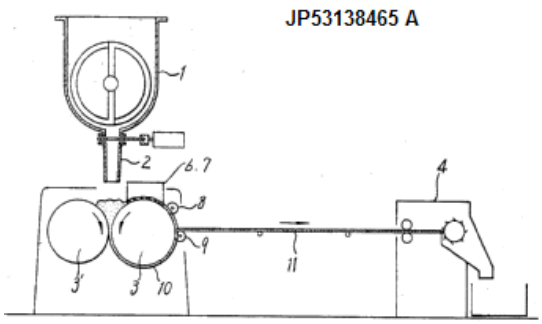

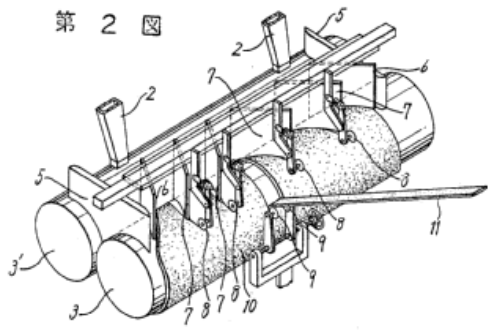

B29B 7/564

{at least one of the rollers being provided with helicoidal grooves or ridges, e.g. followed by axial extrusion}

Definition statement

This place covers:

Illustrative example of subject matter classified in B29B 7/564.

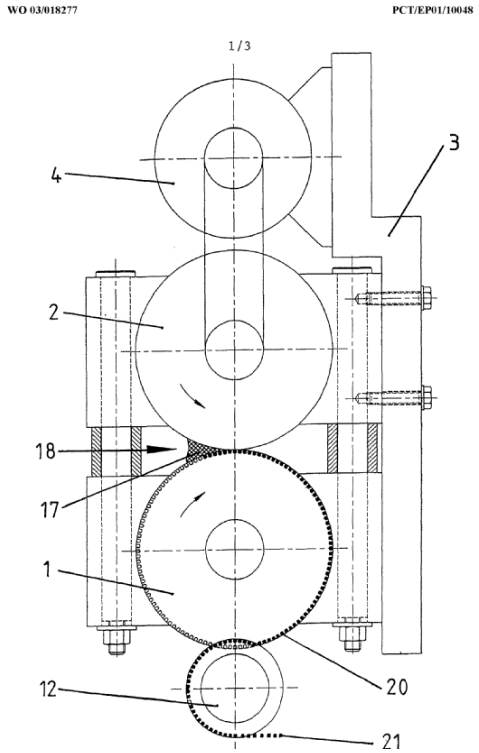

B29B 7/566

{provided with means to take material away from a set of rollers and to reconduct it to the same set; provided with endless belts, e.g. which can be in or out of cooperation with at least one of the rollers}

Definition statement

This place covers:

Illustrative example of subject matter classified in B29B 7/566.

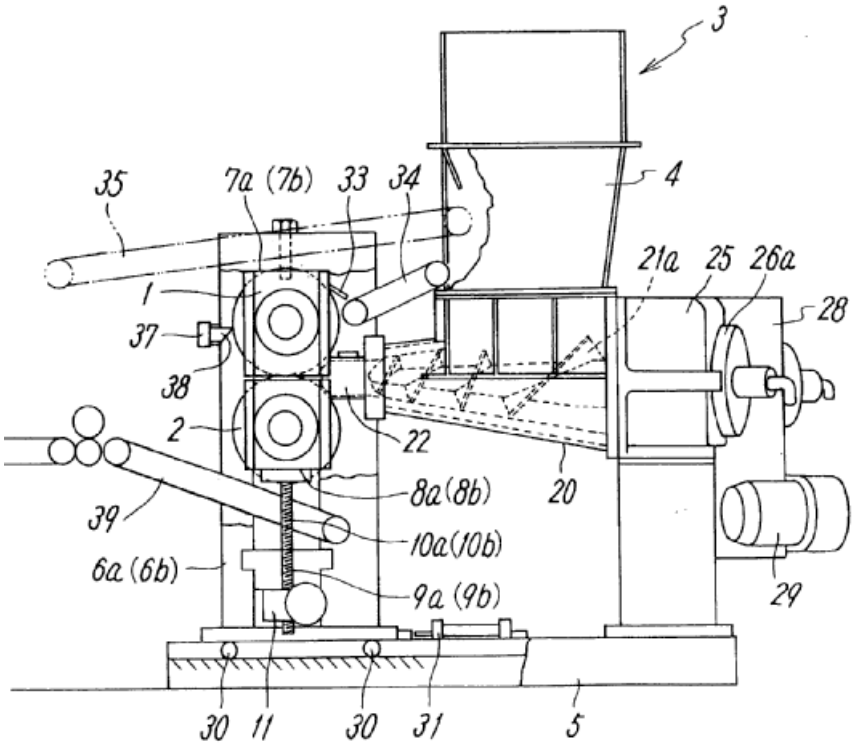

EP 1 552 914 A1

B29B 7/568

{with consecutive sets of rollers or a train of rollers}

Definition statement

This place covers:

Illustrative example of subject matter classified in B29B 7/568.

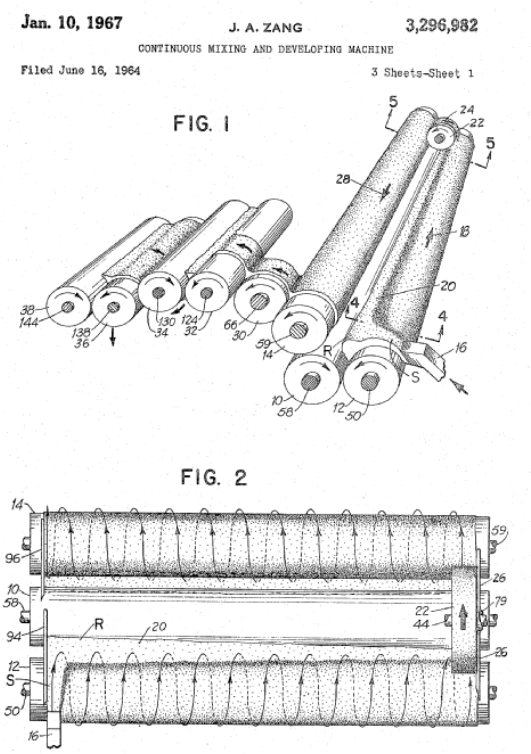

B29B 7/7442

{with driven stirrer}

Definition statement

This place covers:

Illustrative example of subject matter classified in B29B 7/7442.

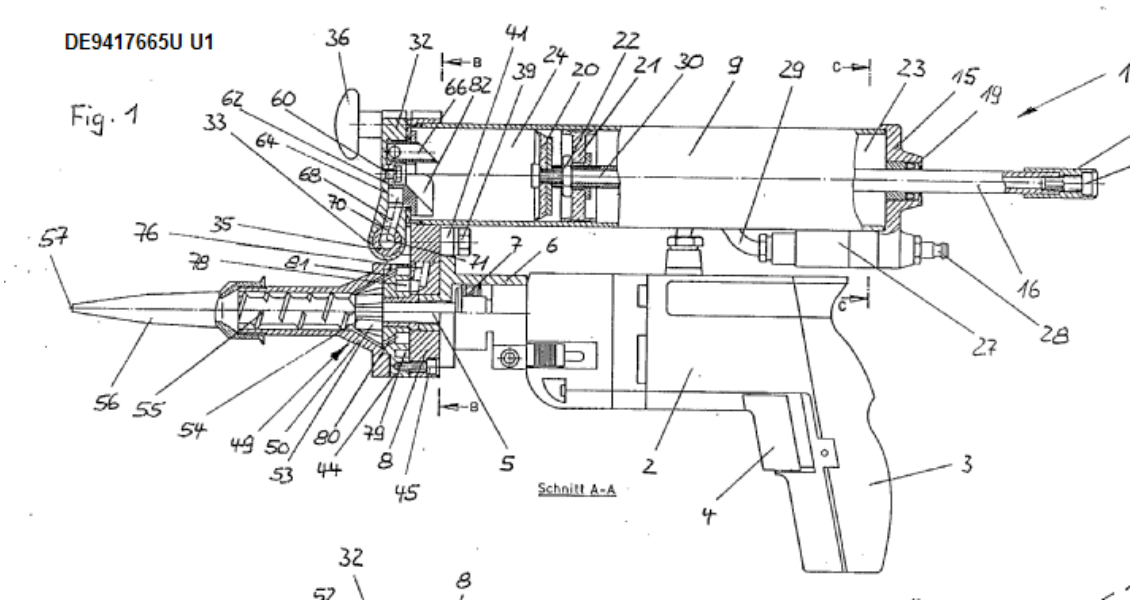

B29B 7/7447

{including means for feeding the components}

Definition statement

This place covers:

Illustrative example of subject matter classified in B29B 7/7447.

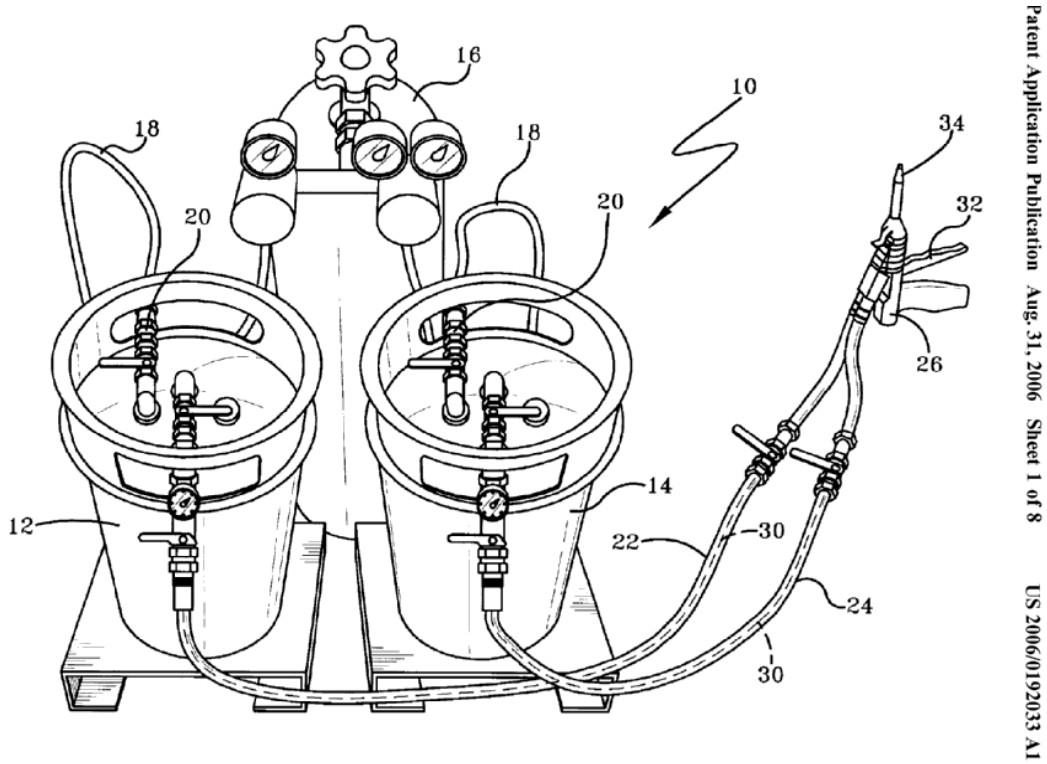

B29B 7/7452

{for mixing components by spraying them into each other; for mixing by intersecting sheets}

Definition statement

This place covers:

Illustrative example of subject matter classified in B29B 7/7452.

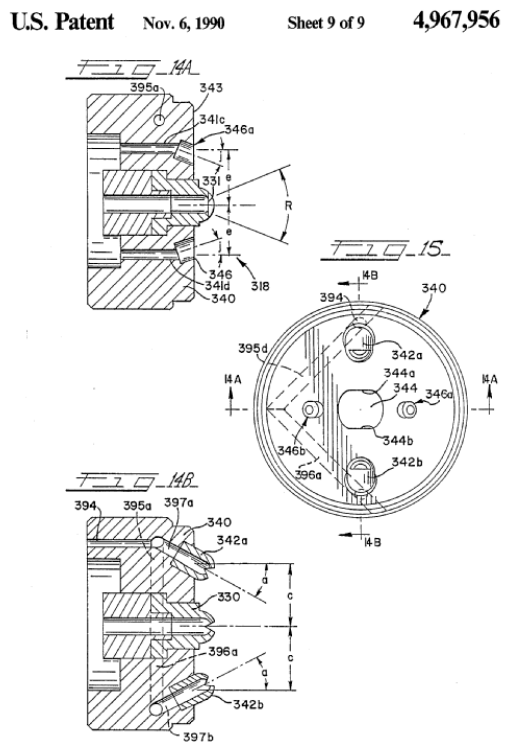

B29B 7/7457

{Mixing heads without moving stirrer (B29B 7/7438, B29B 7/76 take precedence)}

Definition statement

This place covers:

Illustrative example of subject matter classified in B29B 7/7457.

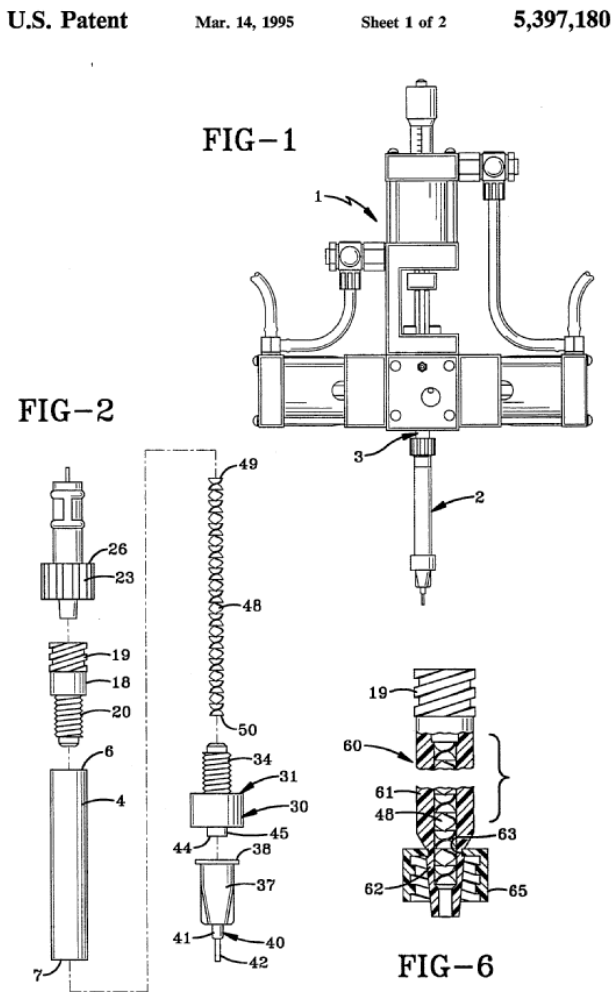

B29B 7/7461

{Combinations of dissimilar mixers}

Definition statement

This place covers:

Illustrative example of subject matter classified in B29B 7/7461.

EP 1 419 040 B1

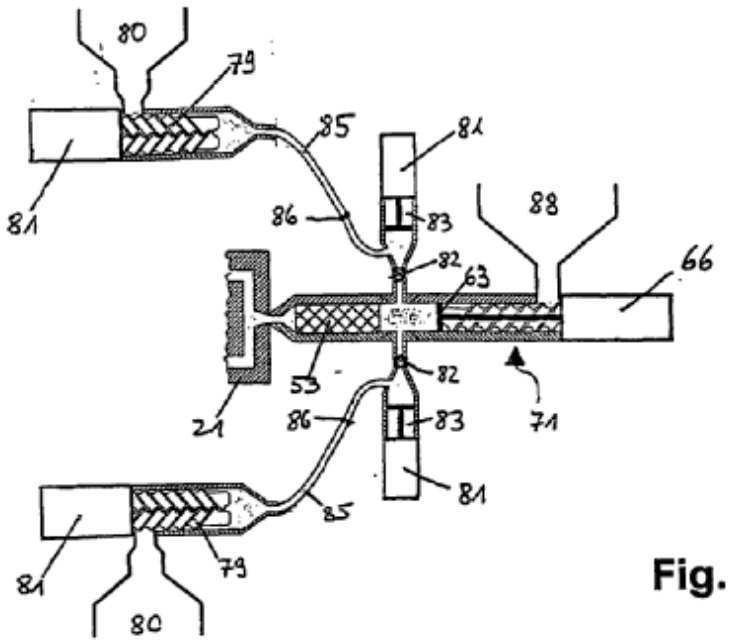

Fig. 2 E

B29B 7/7466

{Combinations of similar mixers}

Definition statement

This place covers:

Illustrative example of subject matter classified in B29B 7/7466.

EP 1 382 425 A2

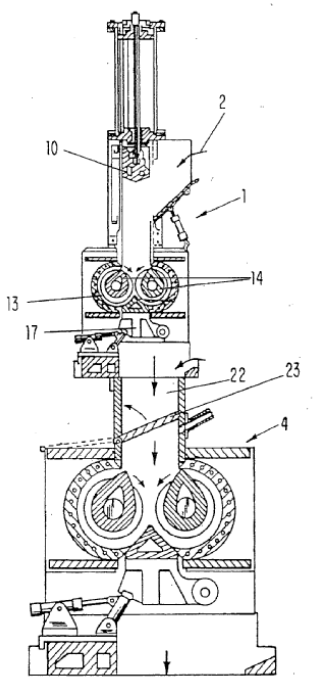

B29B 7/7471

{Mixers in which the mixing takes place at the inlet of a mould, e.g. mixing chambers situated in the mould opening}

Definition statement

This place covers:

Illustrative example of subject matter classified in B29B 7/7471.

Patent Application Publication Aug. 9, 2001 Sheet 3 of 7 US 2001/0012805 A1

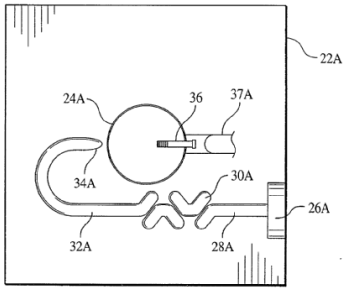

FIG. 3

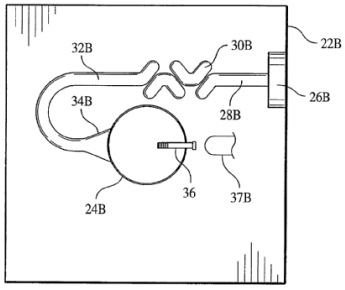

FIG. 4

B29B 7/748

{Plants (B29B 7/7433, B29B 7/7485, B29B 7/7495 take precedence)}

Definition statement

This place covers:

Illustrative example of subject matter classified in B29B 7/748.

FIG. 3

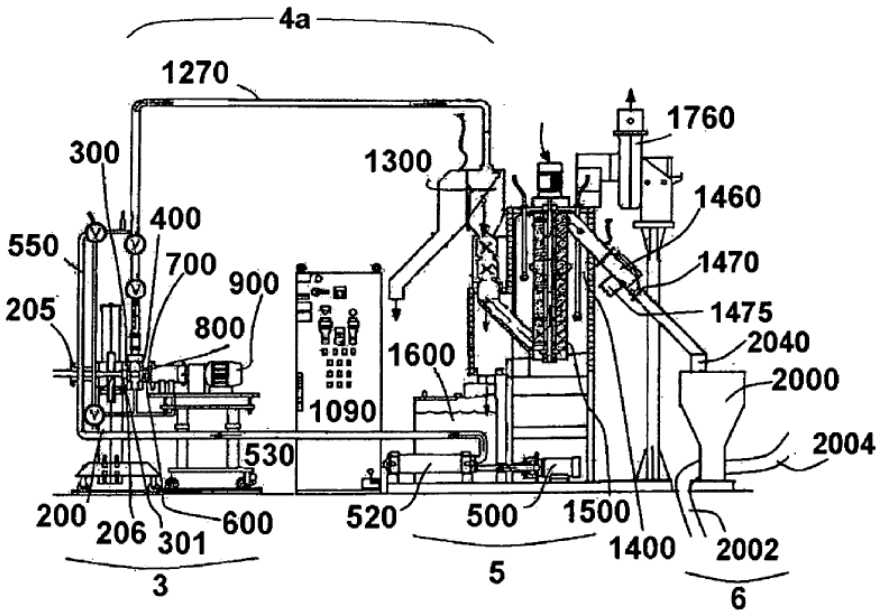

Patent Application Publication Aug. 13, 2009 Sheet 3 of 34 US 2009/0203840 A1

B29B 7/7485

{with consecutive mixers, e.g. with premixing some of the components}

Definition statement

This place covers:

Illustrative example of subject matter classified in B29B 7/7485.

CH 702 321 B1

Bild 1 - Schematischer Verfahrensaufbau einer mehrstufigen Direktverdampfung von elastomerhaltiger Polymerlösung

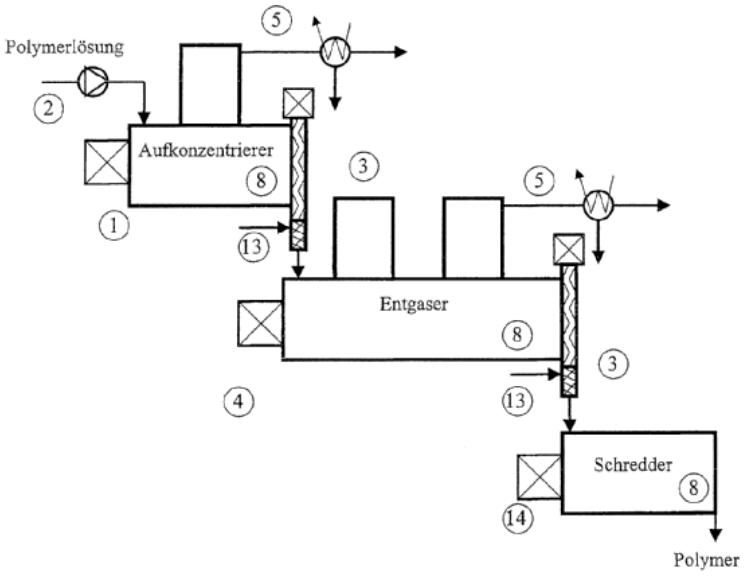

B29B 7/749

{with stirring means for the individual components before they are mixed together}

Definition statement

This place covers:

Illustrative example of subject matter classified in B29B 7/749.

DE 10 2006 015 768 A1 2006.10.12

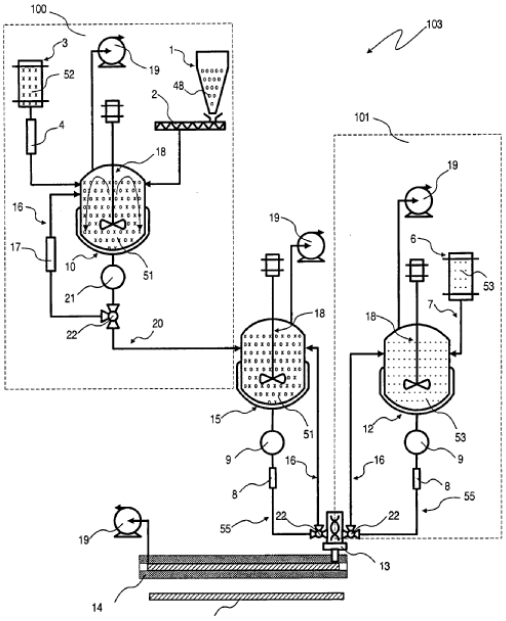

B29B 7/7605

{having additional mixing arrangements (B29B 7/7673 takes precedence)}

Definition statement

This place covers:

Illustrative example of subject matter classified in B29B 7/7605.

WO 2011/023302

Fig. 1a

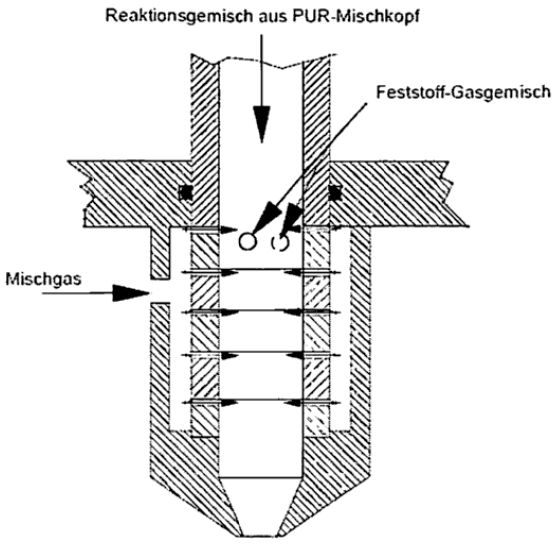

B29B 7/7663

{the mixing head having an outlet tube with a reciprocating plunger, e.g. with the jets impinging in the tube}

Definition statement

This place covers:

Illustrative example of subject matter classified in B29B 7/7663.

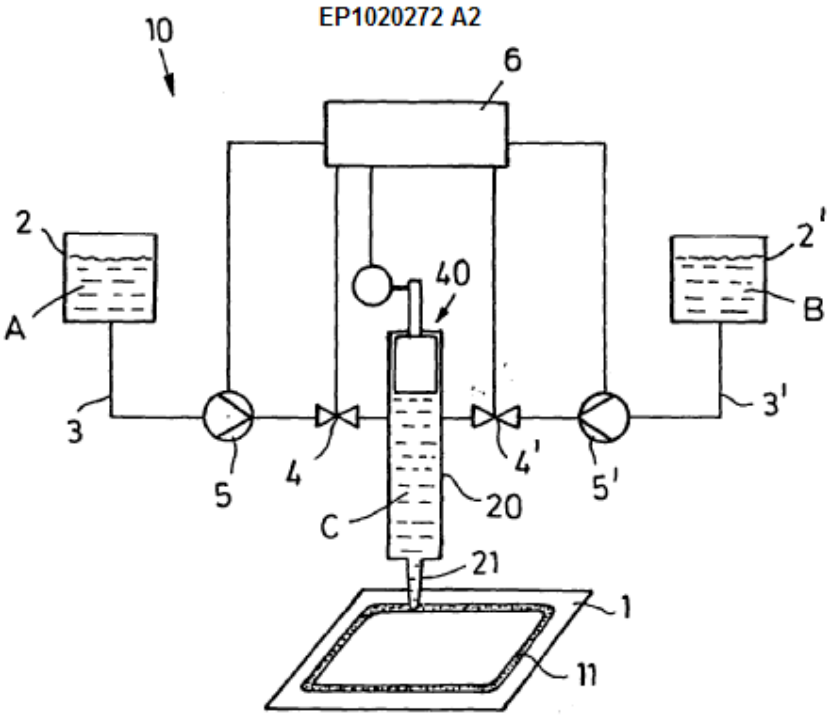

B29B 7/7668

{having a second tube intersecting the first one with the jets impinging in the second tube}

Definition statement

This place covers:

Illustrative example of subject matter classified in B29B 7/7668.

EP 1 992 466 A2

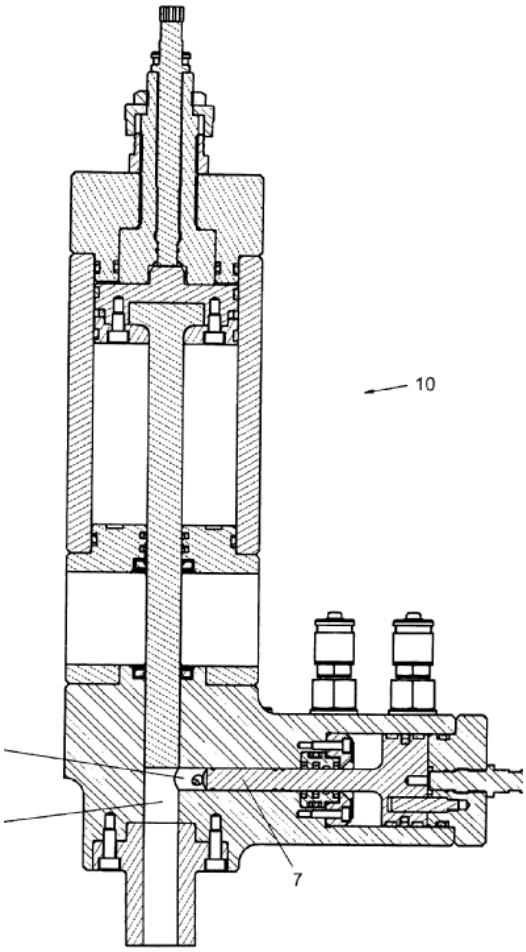

B29B 7/7673

{having additional mixing arrangements (B29B 7/7668 takes precedence)}

Definition statement

This place covers:

Illustrative example of subject matter classified in B29B 7/7673.

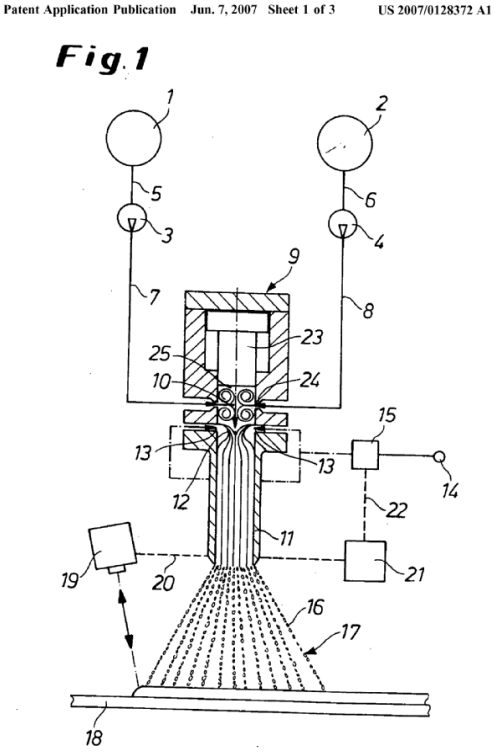

B29B 7/7689

{Plunger constructions}

Definition statement

This place covers:

Illustrative example of subject matter classified in B29B 7/7689.

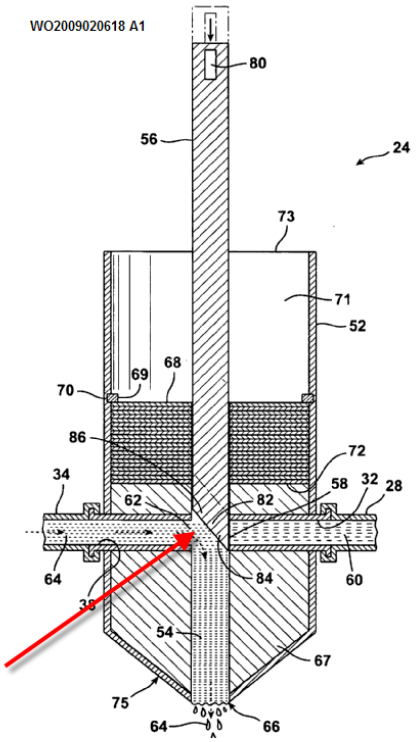

B29B 7/7694

{comprising recirculation channels; ducts formed in the plunger}

Definition statement

This place covers:

Illustrative example of subject matter classified in B29B 7/7694.

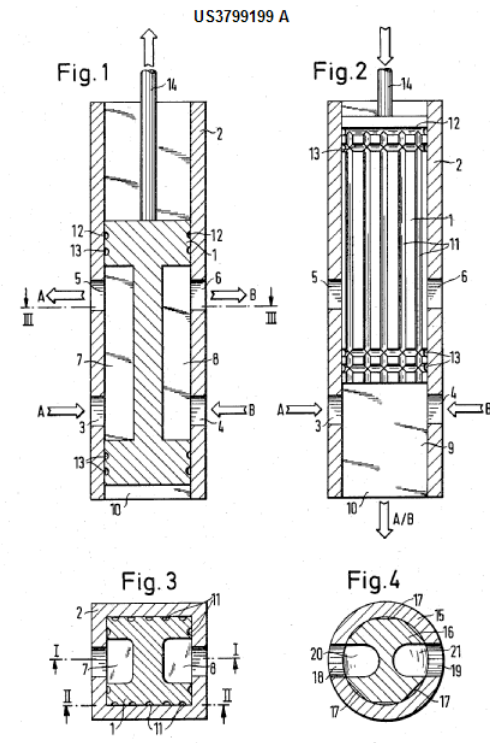

B29B 9/00

Making granules (in general B01J; chemical aspects C08J 3/12)

Definition statement

This place covers:

the mechanical preparation of granules, pellets made of plastic material as raw material and used in subsequent plastic shaping techniques which form a final product. The plastic materials concerned by this subclass are polymeric materials used in the subclasses B29C.

References

Limiting references

This place does not cover:

The mechanical preparation of granules, pellets made of non-polymeric material	e.g. A01N 25/12, B22F 9/08, C22B 1/14
Medical preparations characterized by special physical form: particulate form, powder, granulates, microsphere, pellets	A61K 9/14
Making or treating expandable particles	B29C 44/3461
Method of shaping (pelletizing, briquetting) of solid fuel made of vegetable substances (wood, forestry or agricultural wates)	C10L 5/00

B29B 9/02

by dividing preformed material

References

Informative references

Attention is drawn to the following places, which may be of interest for search:

Cutting aspects of dividing the preformed material	B26D
Developers with toner particles; preparation methods	G03G 9/0802

B29B 9/04

in the form of plates or sheets

Definition statement

This place covers:

Illustrative example of subject matter classified in B29B 9/04.

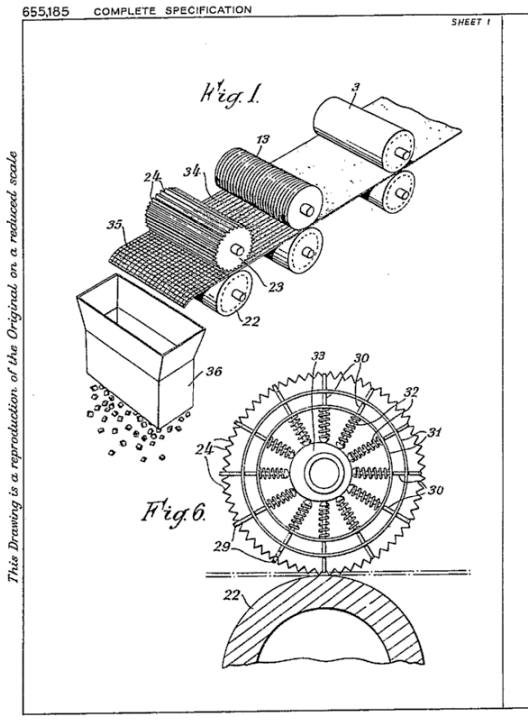

N° 1.472.053 Société dite : Société Rhodiaceta Pl. unique

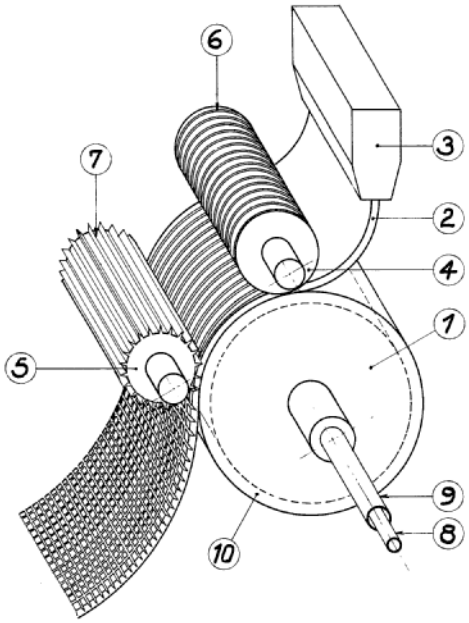

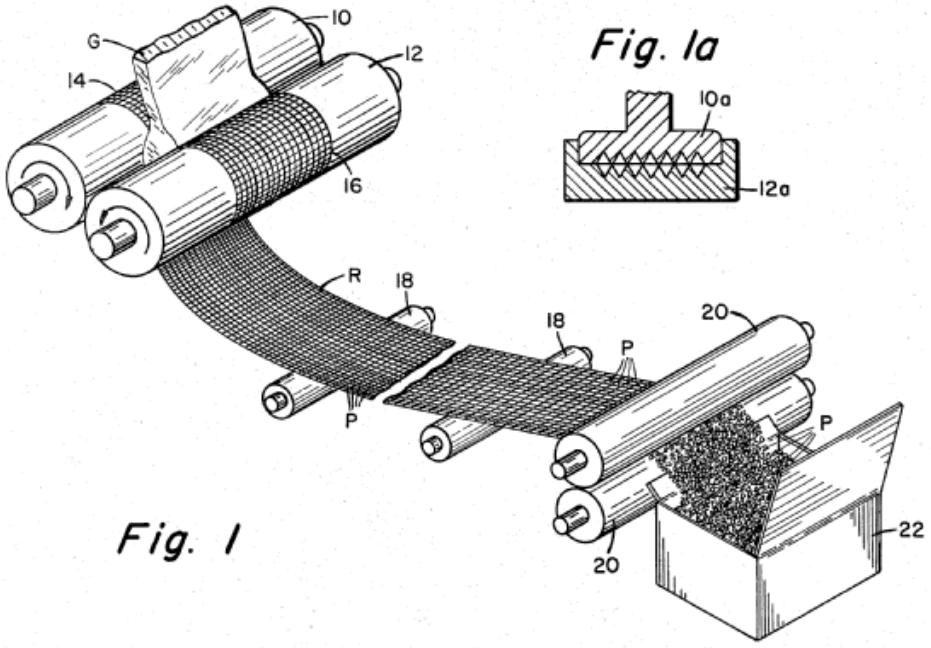

Fig. 1

Fig. 1a

PATENTED JAN 7 1975

SHEET 1 OF 3

3,859,407

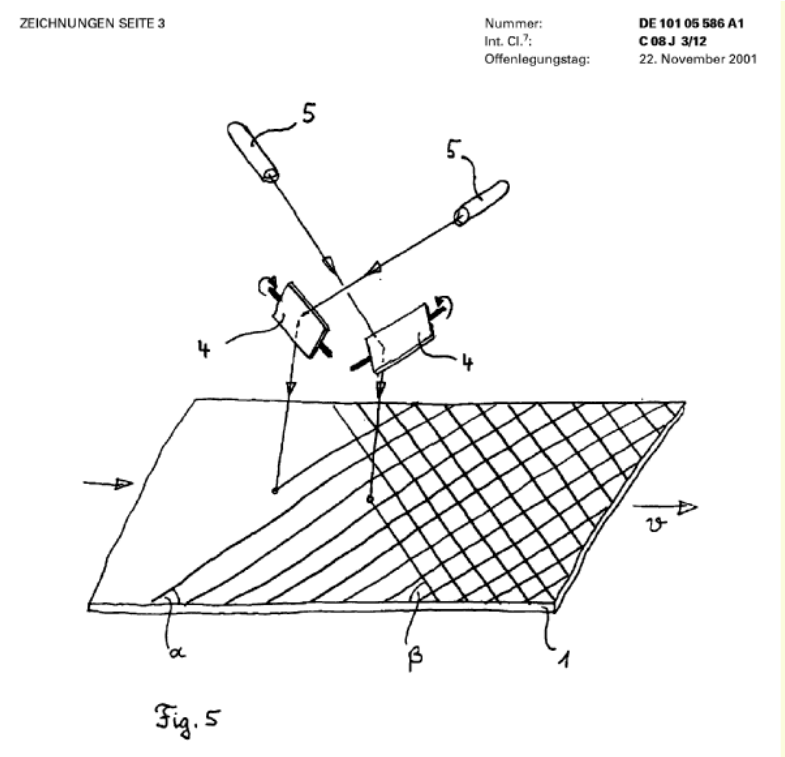

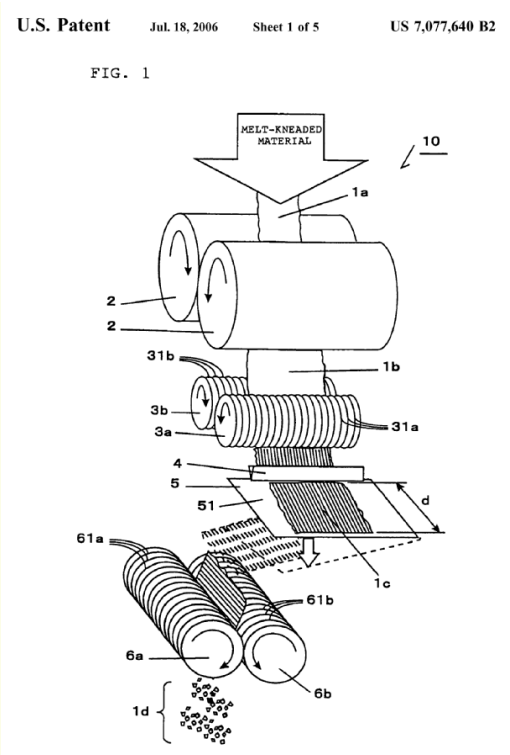

References

Informative references

Attention is drawn to the following places, which may be of interest for search:

Disintegrating by knives or other cutting or tearing members which chop material into fragments, specially adapted for disintegrating plastics	B02C 18/086, B02C 18/148

B29B 9/06

in the form of filamentary material, e.g. combined with extrusion

Definition statement

This place covers:

Illustrative example of subject matter classified in B29B 9/06.

Patent Application Publication Jul. 14, 2005 Sheet 1 of 2 US 2005/0153134 A1

FIG. 1

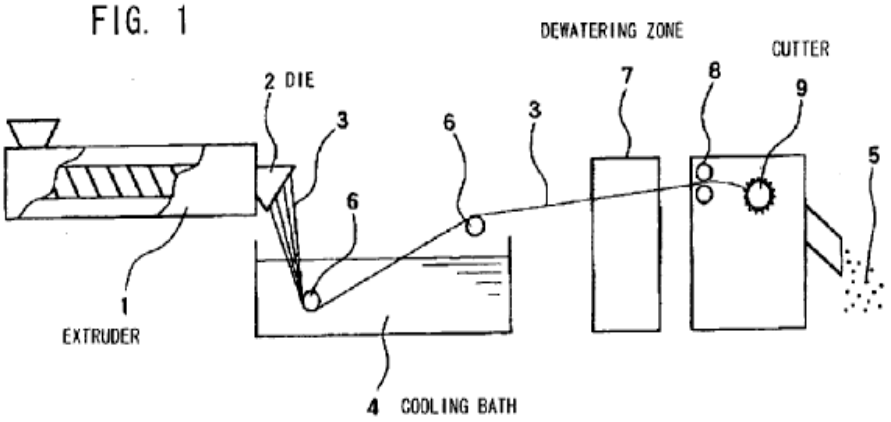

U.S. Patent Aug. 6, 2002 Sheet 1 of 6 US 6,428,298 B1

Fig. 1

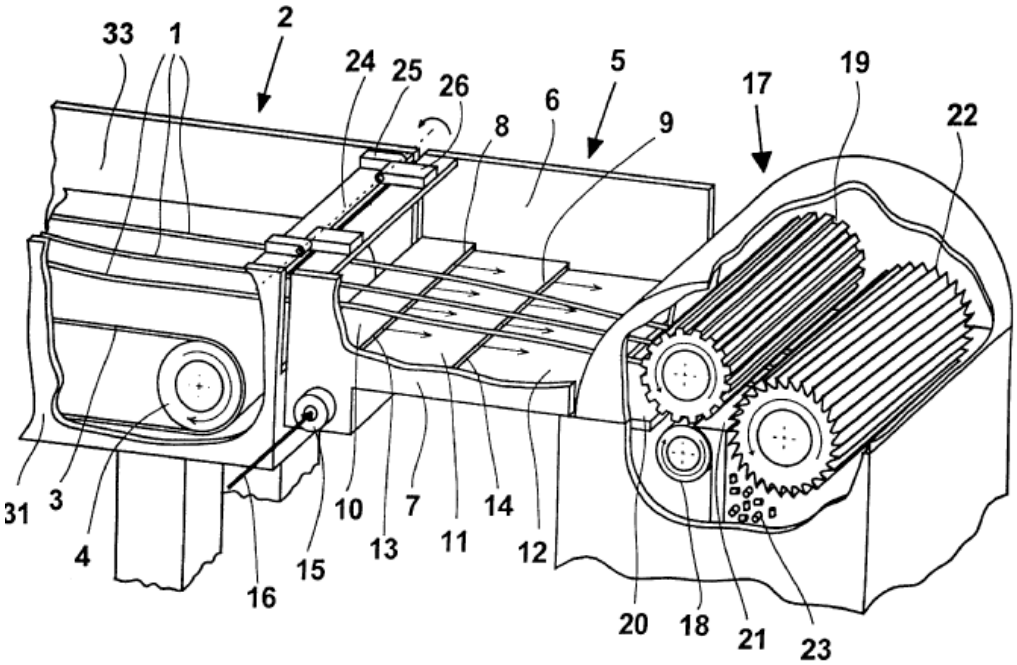

Patent Application Publication Jul. 7, 2005 Sheet 3 of 3 US 2005/0146074 A1

FIG.4

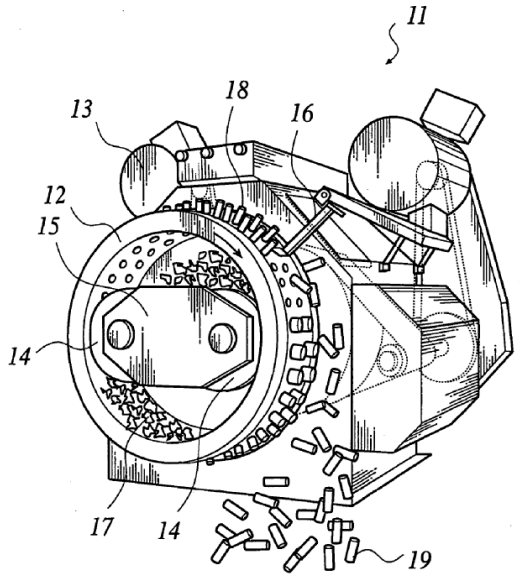

References

Informative references

Attention is drawn to the following places, which may be of interest for search:

Disintegrating by knives or other cutting or tearing members which chop material into fragments, specially adapted for desintegrating plastics	B02C 18/086, B02C 18/148
Multi-port extrusion nozzles	B29C 48/345

B29B 9/065

{under-water, e.g. underwater pelletizers}

Definition statement

This place covers:

The methods and devices for the preparation of granules, pellets made of plastic material as raw material wherein the cutting operation is performed right after extrusion in a water box. Underwater pelletizer includes also the use of other liquids to cool down the extruded plastic material.

Illustrative example of subject matter classified in B29B 9/065.

Patent Application Publication May 31, 2007 Sheet 1 of 15 US 2007/0119286 A1

FIG. 1

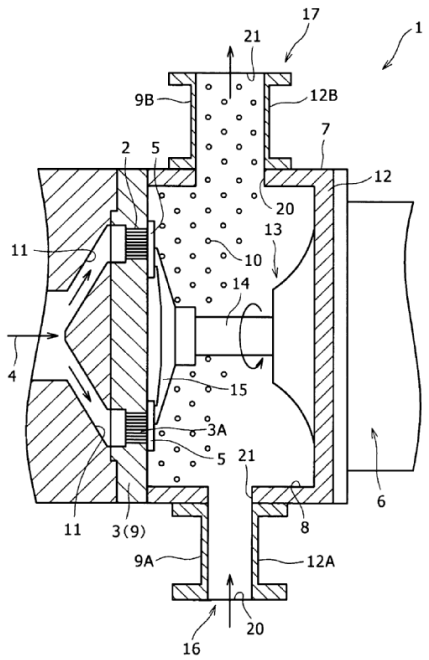

Patent Application Publication May 31, 2007 Sheet 6 of 15 US 2007/0119286 A1

FIG. 6

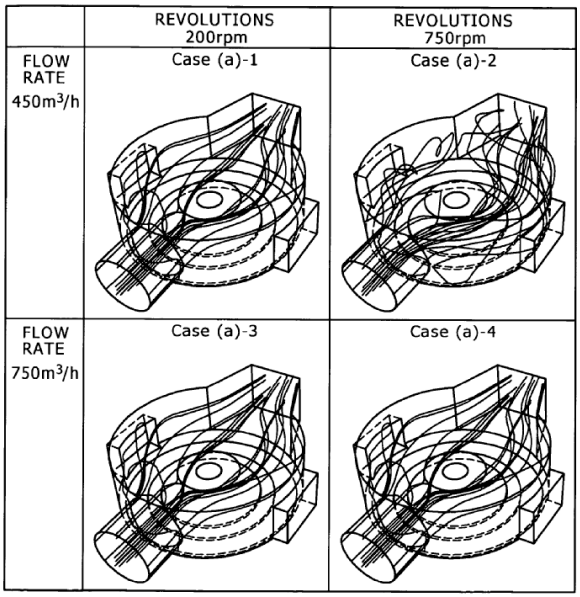

FLOW TRACE LINES FROM THE INLET

Patent Application Publication Oct. 2, 2003 Sheet 3 of 7 US 2003/0185923 A1

FIG. 4

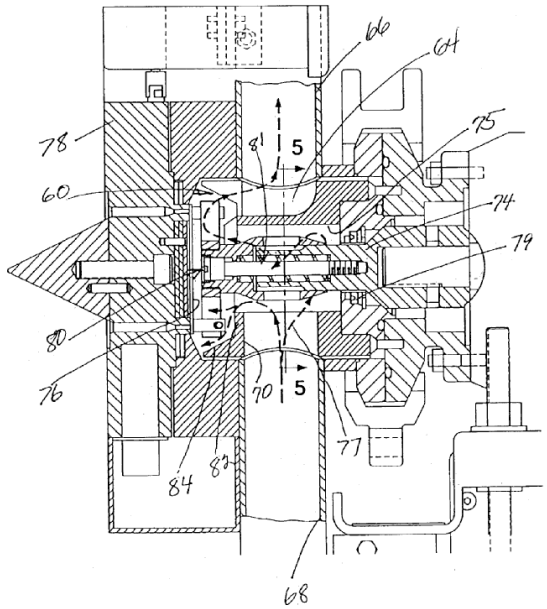

Patent Application Publication Jul. 10, 2008 Sheet 2 of 2 US 2008/0164352 A1

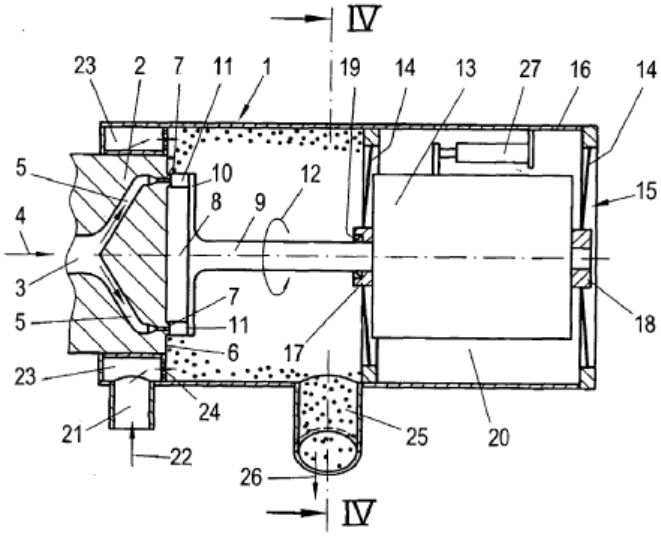

FIG. 3

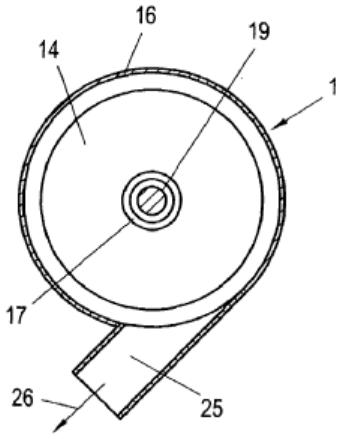

FIG. 4

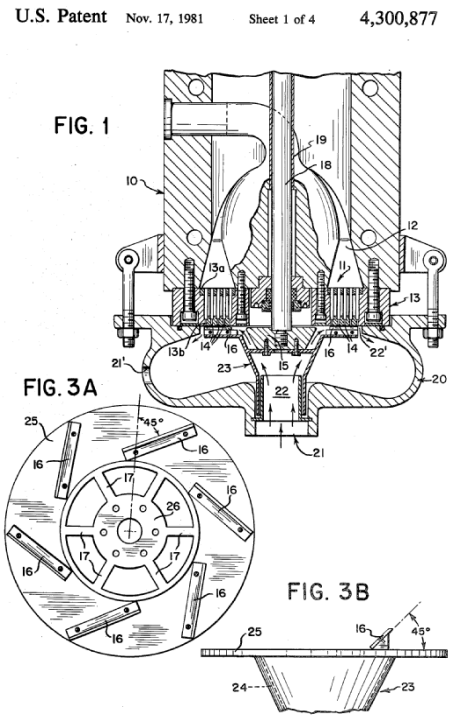

B29B 9/08

by agglomerating smaller particles

Definition statement

This place covers:

Illustrative example of subject matter classified in B29B 9/08.

US-A-2011/0109013

WO 2009/054262 PCT/JP2008/068246

[図2]

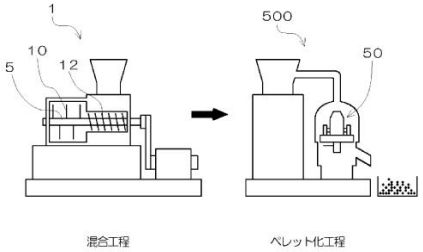

[図3]

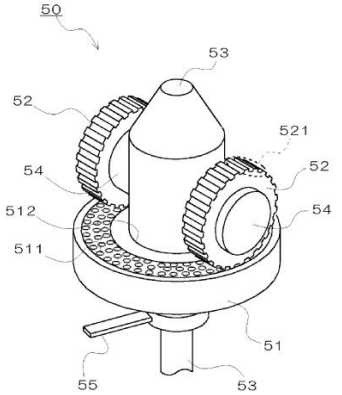

EP 1 120 436 A1

FIG.3

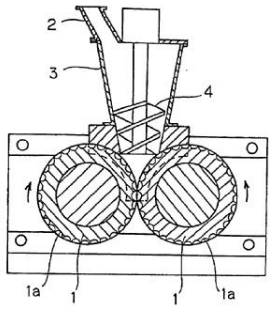

FIG.4

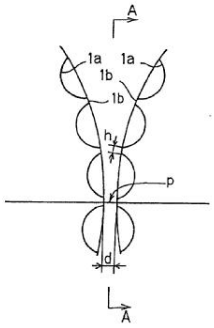

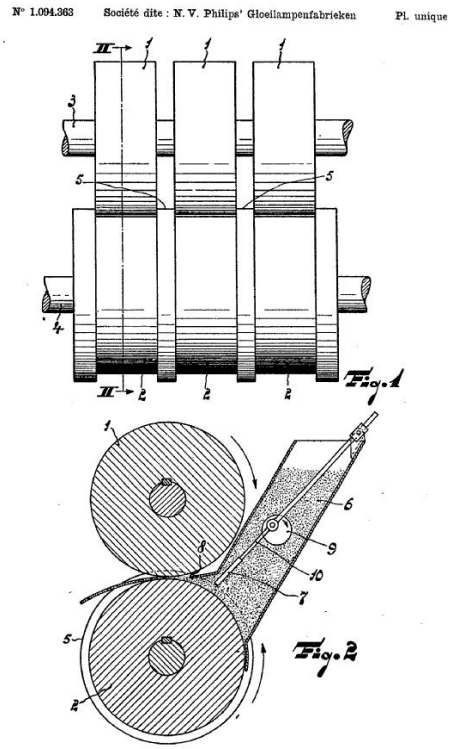

B29B 9/10

by moulding the material, i.e. treating it in the molten state

Definition statement

This place covers:

The methods and devices for the preparation of granules, pellets made of plastic material as raw material wherein no preformed material (e.g. plates, sheets, filamentary matrial as in B29B 9/04 or B29B 9/06) is used. The granules are made by moulding.

Illustrative example of subject matter classified in B29B 9/10.

Patent Application Publication Dec. 5, 2002 US 2002/0182279 A1

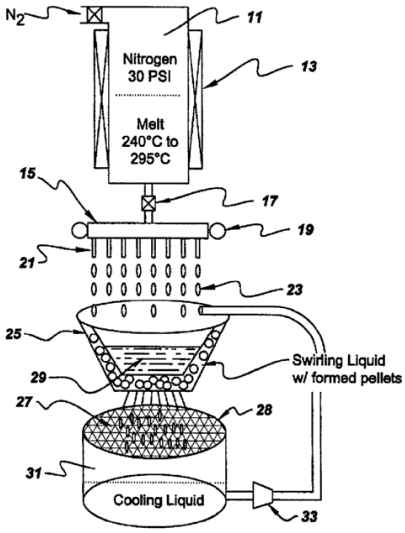

Fig. 1

Patent Application Publication Nov. 18, 2010 Sheet 2 of 3 US 2010/0289166 A1

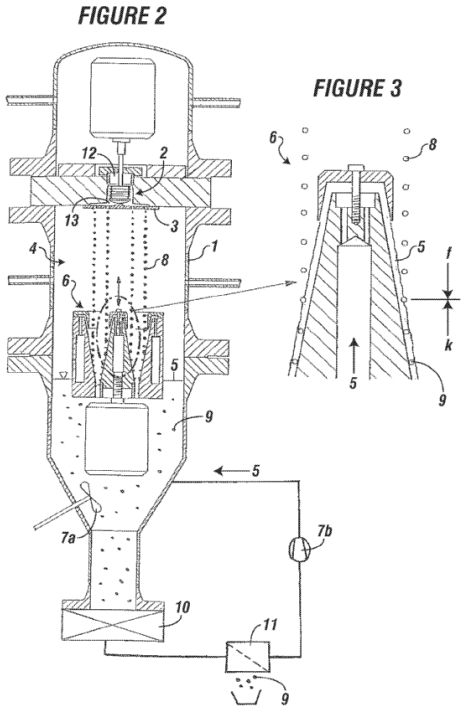

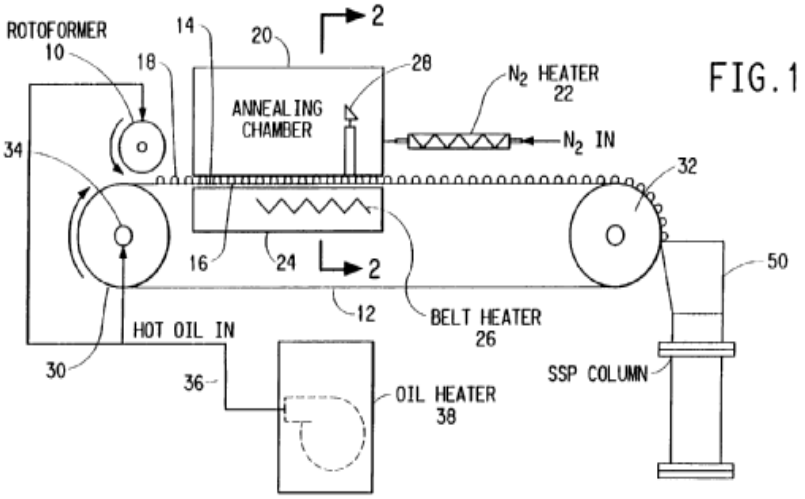

FIG.1

EP 0 804 326 B1

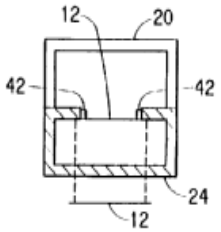

FIG.2

References

Informative references

Attention is drawn to the following places, which may be of interest for search:

Granulating material in general; by dividing the liquid material into drops, e.g. by spraying, and solidifying the drops	B01J 2/02
Granulating material in general; by dividing the liquid material into drops,in a gaseous medium	B01J 2/04
Granulating material in general; by dividing the liquid material into drops,in a liquid medium	B01J 2/06

B29B 9/12

characterised by structure or composition

Definition statement

This place covers:

The methods and devices for the mechanical preparation of granules made of plastic material as raw material wherein the granules are defined by their physical structure (e.g. multilayer or compartimentalized granule) or by their composition (e.g. the selection of the granule ingredients has an influence on the method and apparatus used to manufacture the granule).

The documents disclosing only the chemical composition of granules and wherein the mechanical preparation is absent or trivial are classified in C08J 3/12.

Illustrative example of subject matter classified in B29B 9/12.

Patent Application Publication Nov. 24, 2005 Sheet 1 of 2 US 2005/0261126 A1

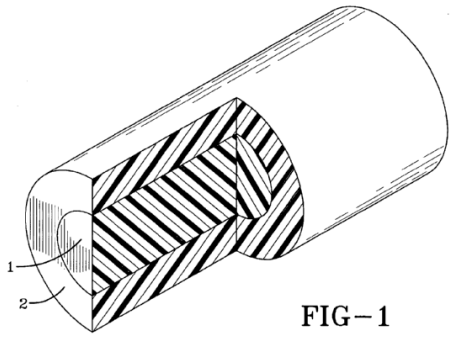

FIG−1

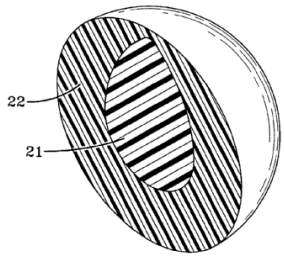

FIG−2

U.S. Patent Apr. 3, 2001 Sheet 1 of 4 US 6,210,521 B1

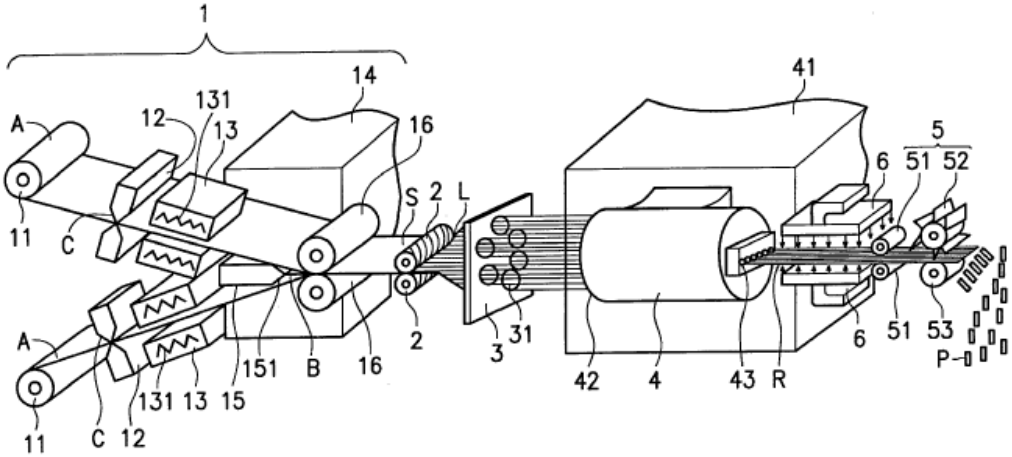

FIG. 1

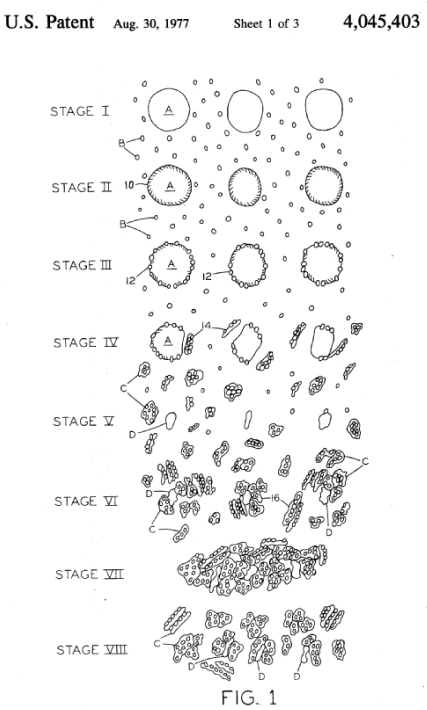

B29B 9/14

fibre-reinforced

Definition statement

This place covers:

The methods and devices for the preparation of granules, pellets made of plastic material as raw material wherein the granule comprises long fibres (fibres as long or longer than the granule), short fibres or fibrous material of different shapes.

The granules comprizing fillers (e.g. powder) are classified in B29B 9/12.

Illustrative example of subject matter classified in B29B 9/14.

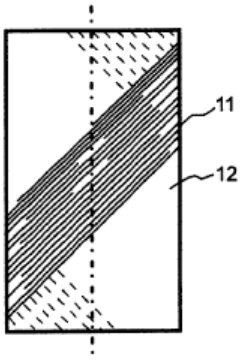

Fig. 1

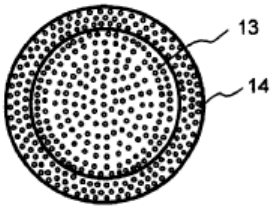

Fig. 2

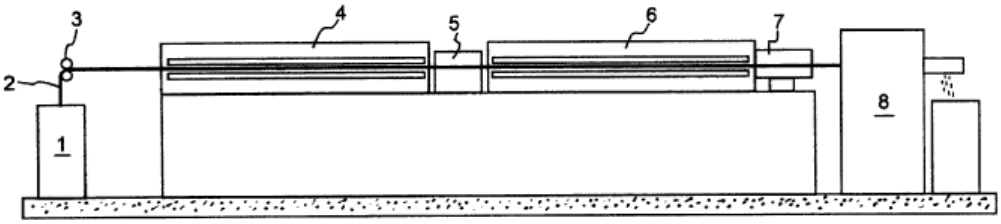

Fig. 3

U.S. Patent Apr. 15, 2003 US 6,548,167 B1

Patent Application Publication Dec. 20, 2007 Sheet 2 of 2 US 2007/0292689 A1

Fig.2

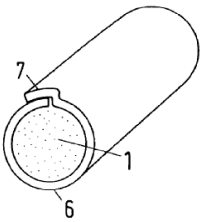

Fig.3

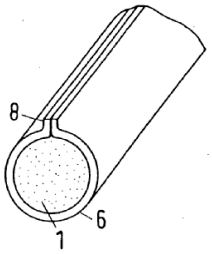

Fig.4

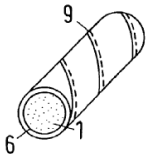

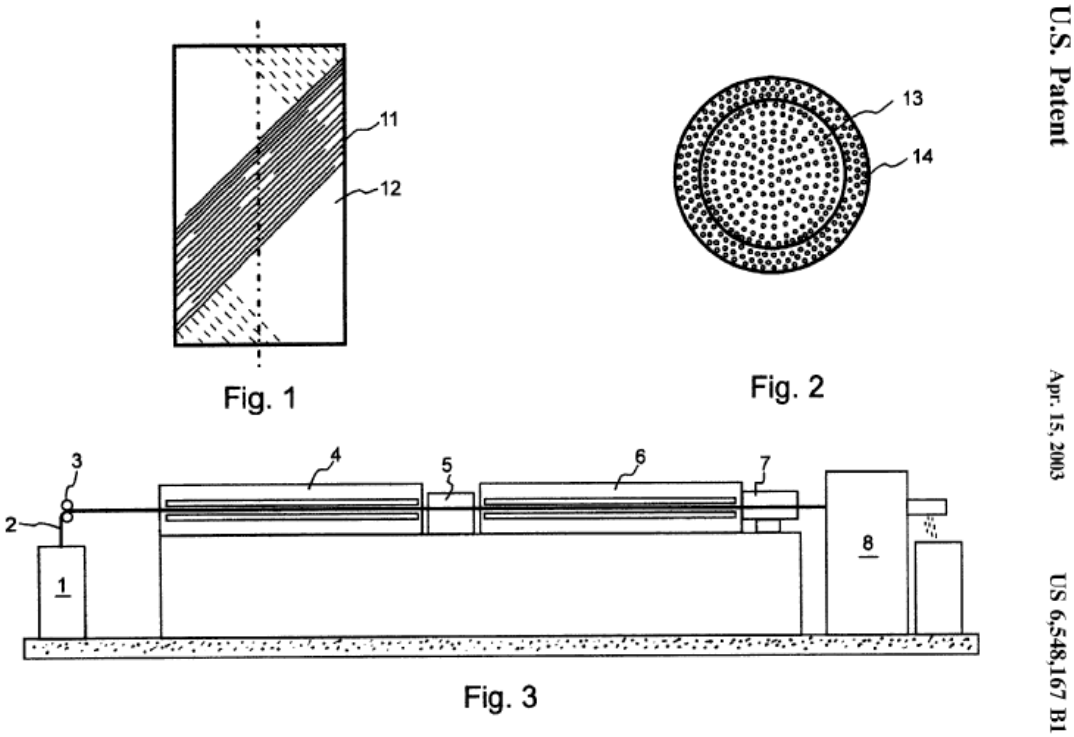

References

Informative references

Attention is drawn to the following places, which may be of interest for search:

Pretreatment of reinforcement; coating or impregnating of reinforcements of indefinite length with a matrix in liquid form, e.g. as melt, solution or latex	B29B 15/122

B29B 9/16

Auxiliary treatment of granules

Definition statement

This place covers:

The methods and devices for the after-treatment of granules, pellets made of plastic material (e.g. absorbing, coating, crystallizing, deforming, purifying).

The chemical aspect of the treatment of granules (e.g. post-polymerization, polycondensation) is classifiyed in C08.

Illustrative example of subject matter classified in B29B 9/16.

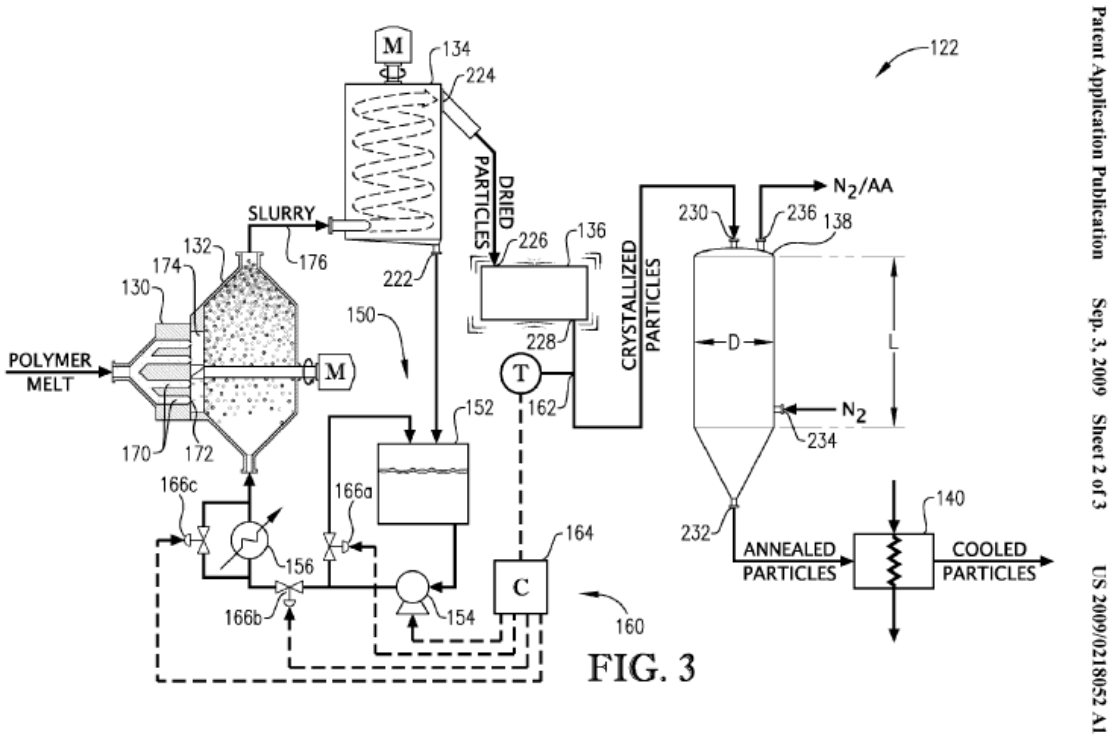

FIG. 3

Patent Application Publication Jan. 13, 2011 Sheet 2 of 14 US 2011/0008623 A1

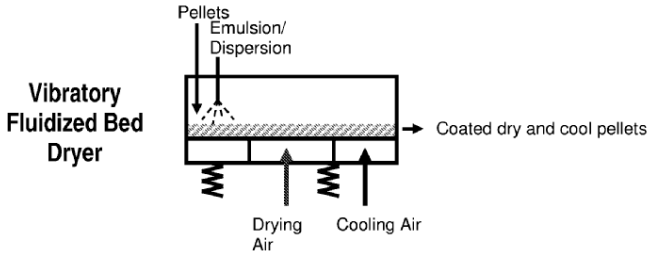

Fig. 2

Patent Application Publication Mar. 20, 2008 US 2008/0071061 A1

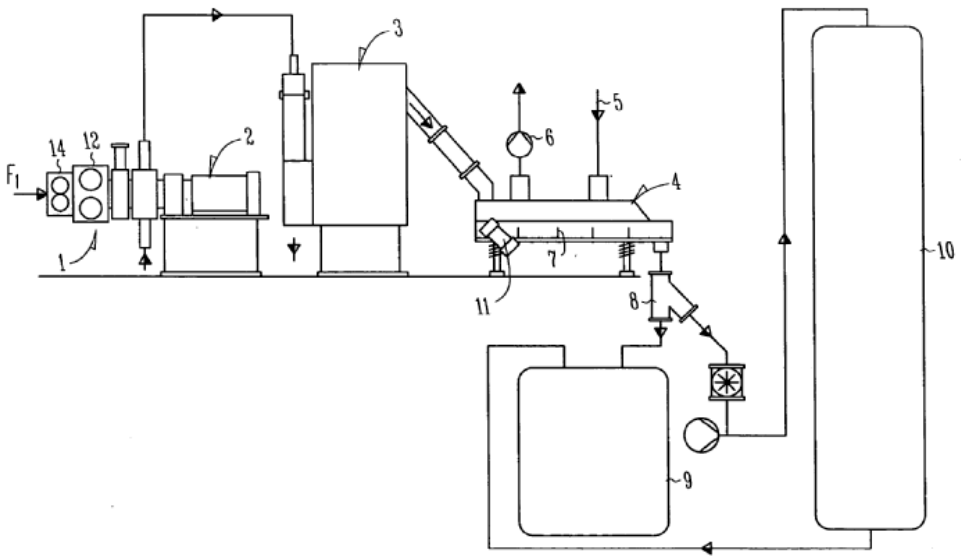

Fig. 1

Patent Application Publication Apr. 25, 2002 Sheet 2 of 8 US 2002/0046700 A1

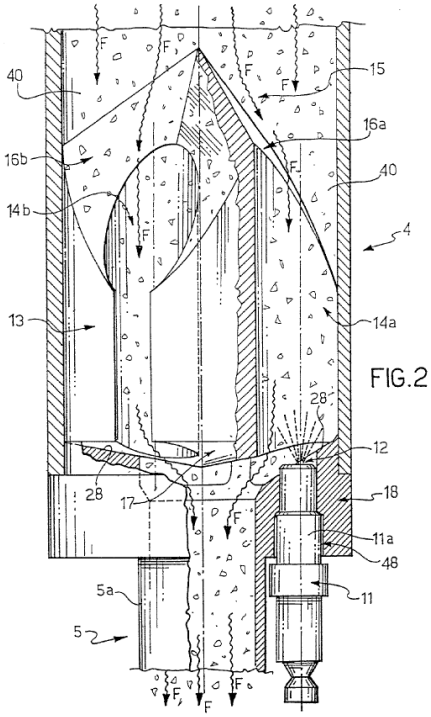

FIG.2

U.S. Patent Jul. 2, 1996 5,532,335

FIG.1

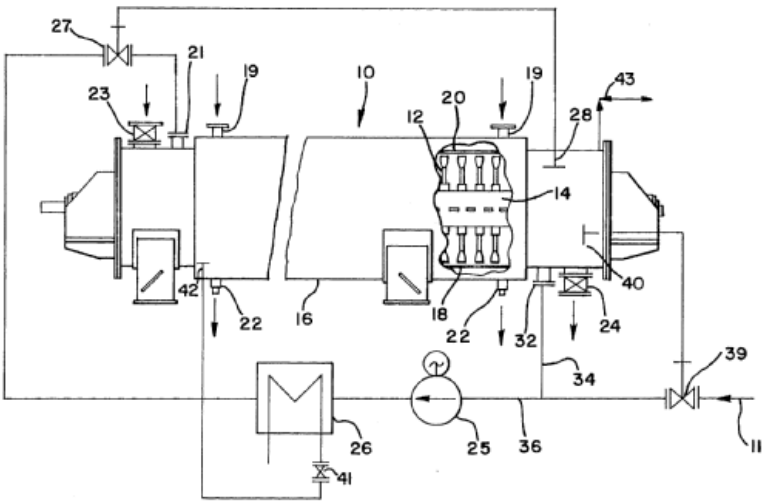

FIG.2

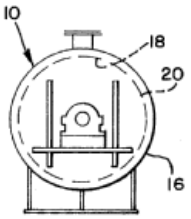

U.S. Patent June 29, 1976 Sheet 1 of 2 3,967,005

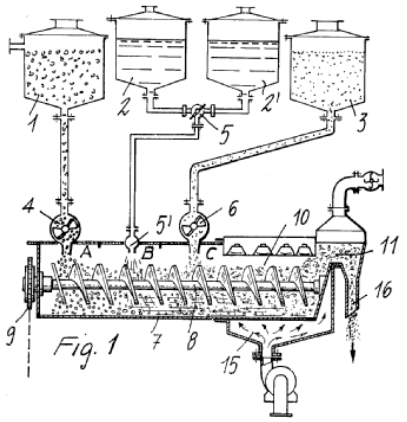

Fig. 1

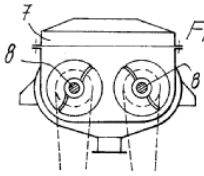

Fig. 2

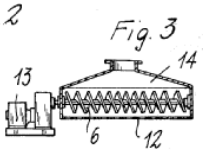

Fig. 3

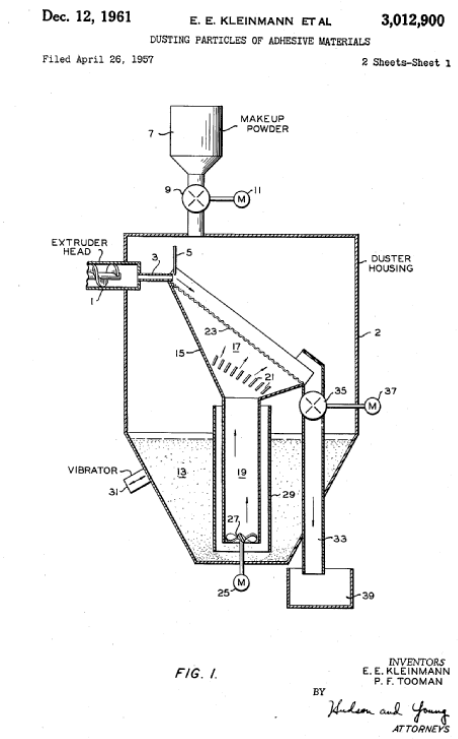

References

Informative references

Attention is drawn to the following places, which may be of interest for search:

Macromolecular compounds obtained by reactions forming a carboxylic ester link in the main chain of the macromolecule	C08G 63/00
Solid-state polycondensation	C08G 63/80
Post-polymerisation treatment	C08G 63/88
Purification; Drying	C08G 63/90
Macromolecular compounds obtained by reactions forming a carboxylic amide link in the main chain of the macromolecule	C08G 69/00
Solid state polycondensation	C08G 69/30
Post-polymerisation treatment	C08G 69/46
Machines or apparatus for drying materials in loose, plastic, or fluidised form, e.g. granules, staple fibres, with progressive movement	F26B 17/00

B29B 11/00

Making preforms (B29C 61/06 takes precedence {; combined with blow-moulding B29C 49/02, with thermoforming B29C 51/02; making preforms for manufacturing of light guides B29D 11/00721})

Definition statement

This place covers:

Preforms relating to B29 in general.

Preforms for blow-moulding bottles.

Making of preforms not otherwise provided for.

References

Informative references

Attention is drawn to the following places, which may be of interest for search:

F-term (Japanese classification) related to making preforms	4F201/BM00

Special rules of classification

The making of preforms (process and apparatus) for which an entry is provided elsewhere, e.g. B29C, is not classified in B29B 11/00 and its subgroups.

However, the indexing of preforms for blow-moulding bottles using the coding scheme under B29B 2911/14 is obligatory when the structure of the preform differs from the conventional shape (one layer, open neck, flange, cylindrical body, closed semispherical end).

Glossary of terms

In this place, the following terms or expressions are used with the meaning indicated:

Preform	An object obtained by moulding substantially consisting of plastic material, which has to undergo an additional processing step, e.g. blow moulding, to obtain its final shape

Synonyms and Keywords

In patent documents, the following words/expressions are often used as synonyms:

- "preform", "parison" and "blank"

B29B 11/02

by dividing preformed material, e.g. sheets, rods

References

Informative references

Attention is drawn to the following places, which may be of interest for search:

F-term (Japanese classification) related to manufacturing preforms by shredding preformed materials	4F201/BM01

B29B 11/04

by assembling preformed material

Definition statement

This place covers:

Making preforms by assembling separate parts, e.g. making a perform for blow moulding by joining a separately moulded neck and thread portion with a separately moulded body portion.

References

Informative references

Attention is drawn to the following places, which may be of interest for search:

Joining of preformed parts	B29C 65/00
F-term (Japanese classification) related to manufacturing preforms by assembling preformed materials	4F201/BM02

B29B 11/06

by moulding the material

References

Informative references

Attention is drawn to the following places, which may be of interest for search:

F-term (Japanese classification) related to manufacturing preforms by moulding the materials	4F201/BM04

B29B 11/08

Injection moulding

References

Informative references

Attention is drawn to the following places, which may be of interest for search:

F-term (Japanese classification) related to manufacturing preforms by injection moulding	4F201/BM05

Special rules of classification

Injection moulding processes and devices for making preforms, whereby the alleged invention lies in the moulding technique as such, are classified in the moulding technique as such (B29C 45/00) and not in this subgroup.

B29B 11/10

Extrusion moulding

References

Informative references

Attention is drawn to the following places, which may be of interest for search:

F-term (Japanese classification) related to manufacturing preforms by extrusion moulding	4F201/BM06

Special rules of classification

Extrusion moulding processes and devices for making preforms, whereby the alleged invention lies in the moulding technique as such, are classified in the moulding technique (B29C 48/00) as such and not in this subgroup.

B29B 11/12

Compression moulding

References

Informative references

Attention is drawn to the following places, which may be of interest for search:

F-term (Japanese classification) related to manufacturing preforms by compression moulding	4F201/BM07

Special rules of classification

Compression moulding processes and devices for making preforms, whereby the alleged invention lies in the moulding technique as such, are classified in the moulding technique (B29C 43/00) as such and not in this subgroup.

B29B 11/14

characterised by structure or composition

Definition statement

This place covers:

Preforms having a special composition or shape adapted for its further processing steps or use.

References

Informative references

Attention is drawn to the following places, which may be of interest for search:

F-term (Japanese classification) related to:Shapes, structures	4F201/BM12
F-term (Japanese classification) related to:Layered structures	4F201/BM13
F-term (Japanese classification) related to:Compositions, properties	4F201/BM14

Special rules of classification

The indexing of preforms for blow-moulding bottles using the coding scheme under B29B 2911/14 is obligatory when the structure of the preform differs from the conventional shape (one layer, open neck, flange, cylindrical body, closed semispherical end).

B29B 11/16

comprising fillers or reinforcement {(non-woven fabrics per se D04H 1/00, D04H 3/00)}

Definition statement

This place covers:

Preforms having fillers/reinforcement where the purpose of subsequent moulding is mentioned

References

Informative references

Attention is drawn to the following places, which may be of interest for search:

Shaping composites	B29C 70/00
F-term (Japanese classification) related to: Preforms, including shaping thereof	4F072/AG00
F-term (Japanese classification) related to: Manufacturing preforms	4F072/AH00

B29B 13/00

Conditioning or physical treatment of the material to be shaped (chemical aspects C08J 3/00 {; heating, cooling or curing during shaping B29C 35/00; thermal after-treatment B29C 71/02})

Definition statement

This place covers:

The methods and devices for the pre-treatment of the plastic material to be shaped prior to the moulding operation.

Illustrative example of subject matter classified in B29B 13/00.

JP59096134

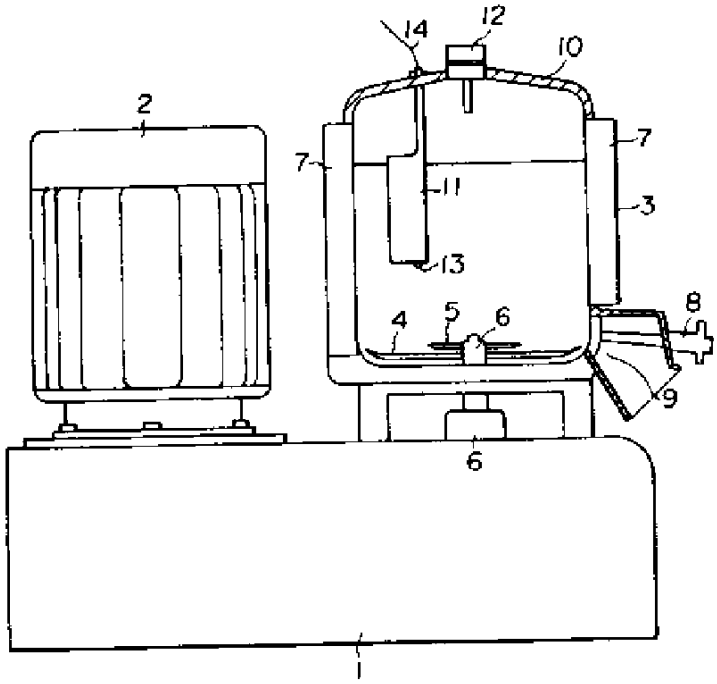

DE1479034 A1

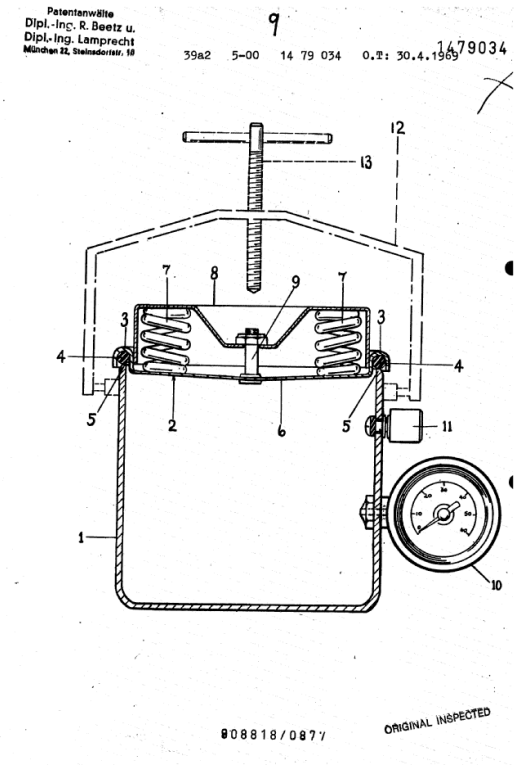

B29B 13/007

{Treatment of sinter powders}

Definition statement

This place covers:

The methods and devices for the pre-treatment of powder plastic material prior to the process of sintering.

Illustrative example of subject matter classified in B29B 13/007.

U.S. Patent June 27, 1995 5,427,660

FIG. 1

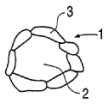

FIG. 2

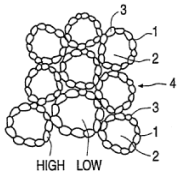

FIG. 3

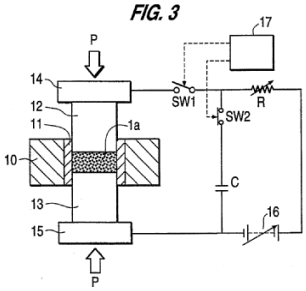

References

Limiting references

This place does not cover:

Sintering layers coated on a mould	B29C 41/00
Compression moulding; pressing and sintering powders, granules or fibres	B29C 43/006
Rapid manufacturing or prototyping of 3D objects; using layers of powder being selectively joined, e.g. by selective laser sintering or melting	B29C 64/153

B29B 13/021

{Heat treatment of powders}

Definition statement

This place covers:

The methods and devices for the pre-treatment of the plastic material to be shaped (powder, pellets, granules) by heating prior to the moulding operation.

Illustrative example of subject matter classified in B29B 13/021.

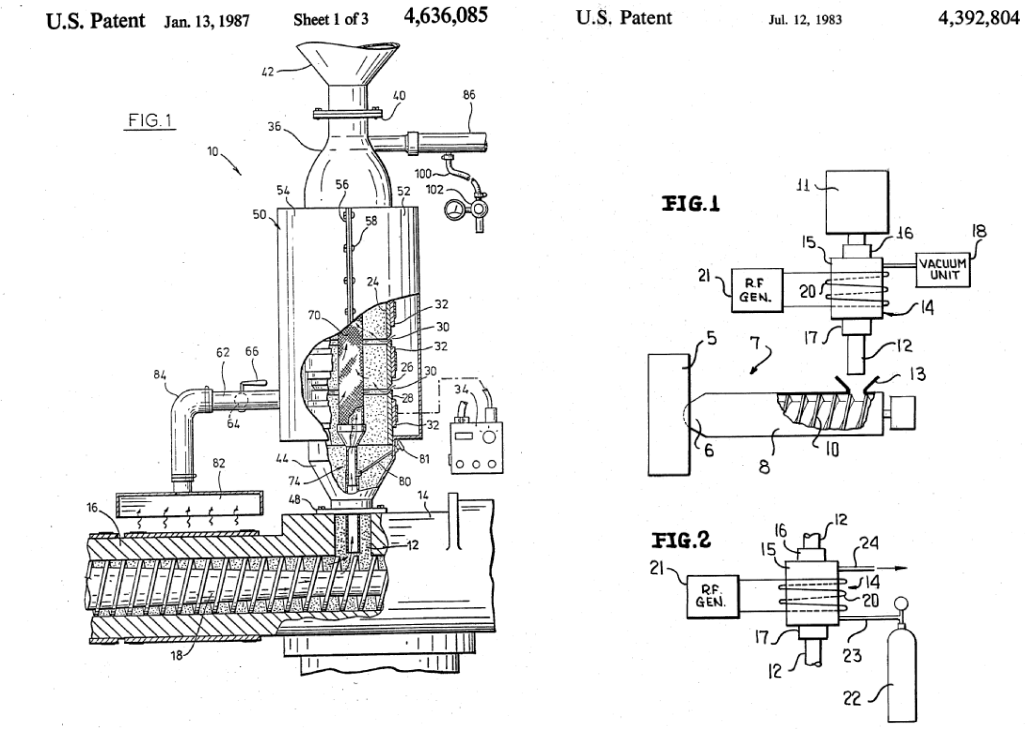

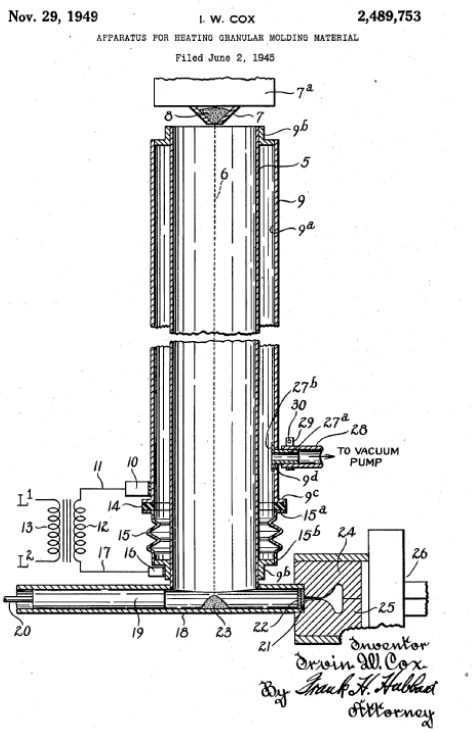

B29B 13/022

{Melting the material to be shaped}

Definition statement

This place covers:

The methods and devices for the heat treatment of the plastic material to be shaped (powder, pellets, granules) until said plastic material melts prior to the moulding operation.

Illustrative example of subject matter classified in B29B 13/022.

Patent Application Publication Aug. 14, 2008 Sheet 1 of 2 US 2008/0190365 A1

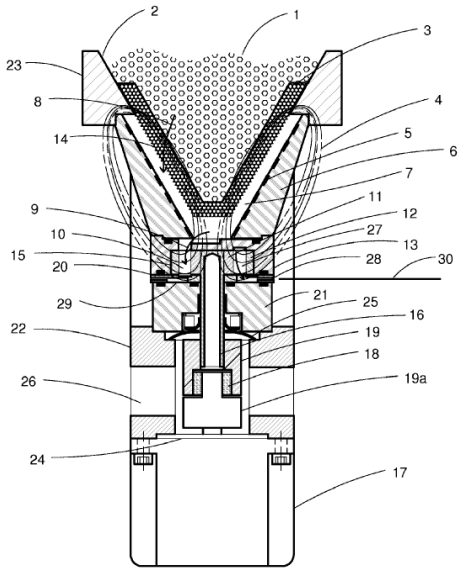

Fig. 1

U.S. Patent Jul. 22, 1997 Sheet 1 of 2 5,650,083

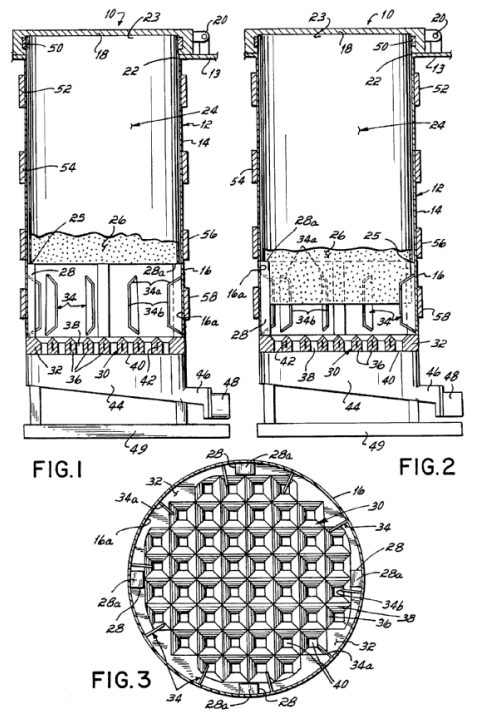

Feb. 24, 1970 V. K. QUARVE 3,496,699

CURTAIN COATING APPARATUS WITH PREWELTER

Original Filed Oct. 21, 1968 2 Sheets-Sheet 1

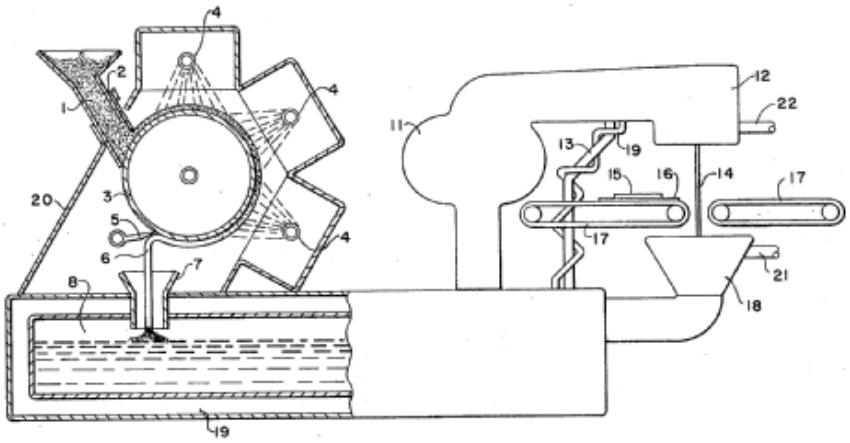

FIG. I

VERNON K. QUARVE
INVENTOR.

BY William J. Friedl
Harry P. Chandler
ATTORNEYS

US2207426

APPARATUS AND METHOD FOR THE PREPARATION AND HANDLING OF PLASTIC MATERIAL

Filed Feb. 26, 1938

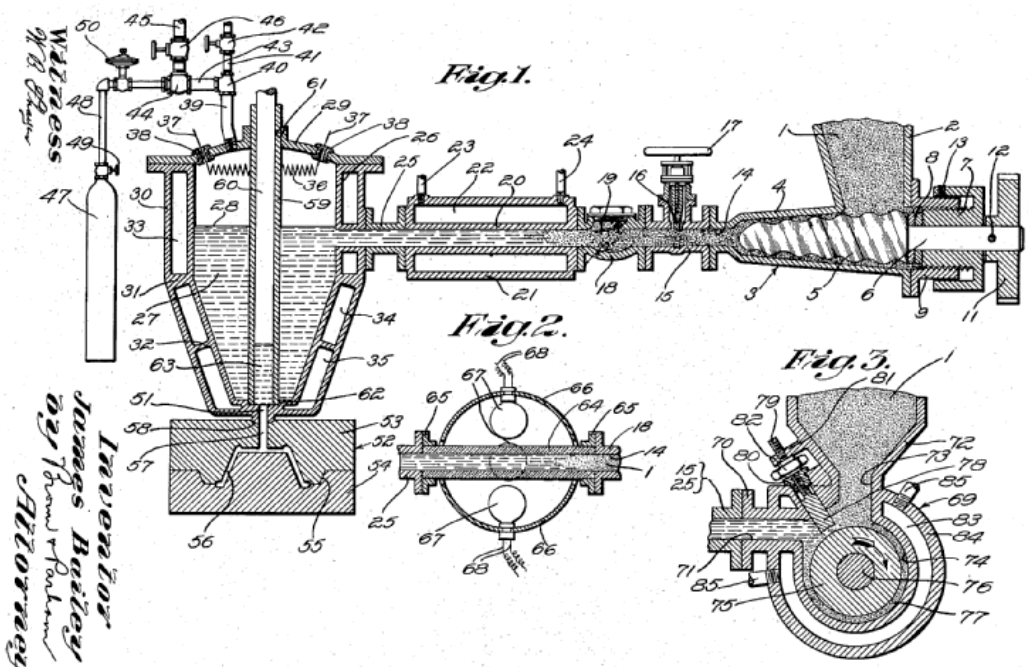

Witness
W. B. Gray

Inventor
James Bailey
By Brown & Parkin
Attorneys

References

Informative references

Attention is drawn to the following places, which may be of interest for search:

Storage, supply or control of liquid or other fluent material; provided with means for heating or cooling the liquid or other fluent material in the supplying means upstream of the applying apparatus	B05C 11/1042

B29B 13/023

{Half-products, e.g. films, plates}

Definition statement

This place covers:

The methods and devices for the pre-treatment by heating of the plastic material to be shaped, said plastic material typically being in the form of a film or plate. Said film or plate is a half-product as it has not yet undergone its final shaping operation.

Illustrative example of subject matter classified in B29B 13/023.

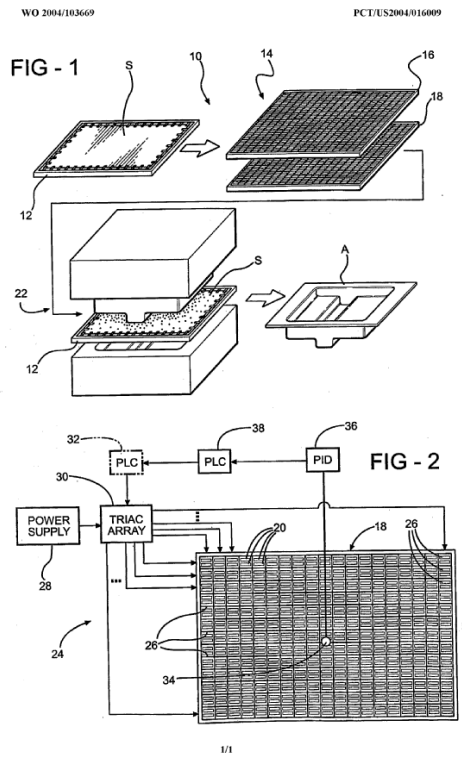

Patent Application Publication Oct. 11, 2001 Sheet 2 of 5 US 2001/0028124 A1

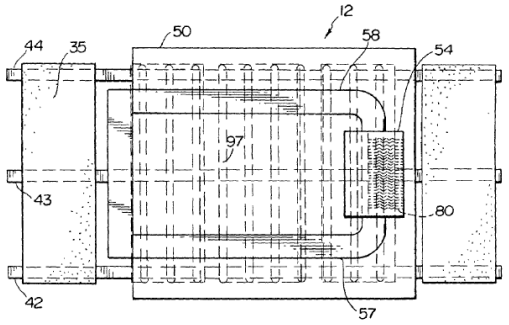

FIG. 2

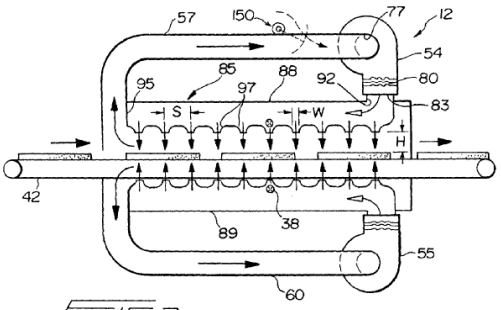

FIG. 3

U.S. Patent May 23, 1989 4,832,885

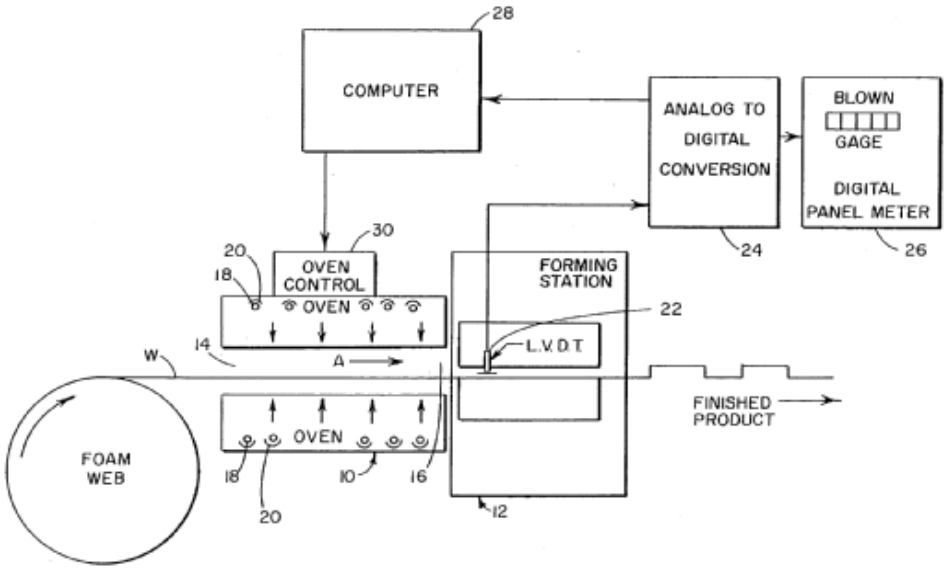

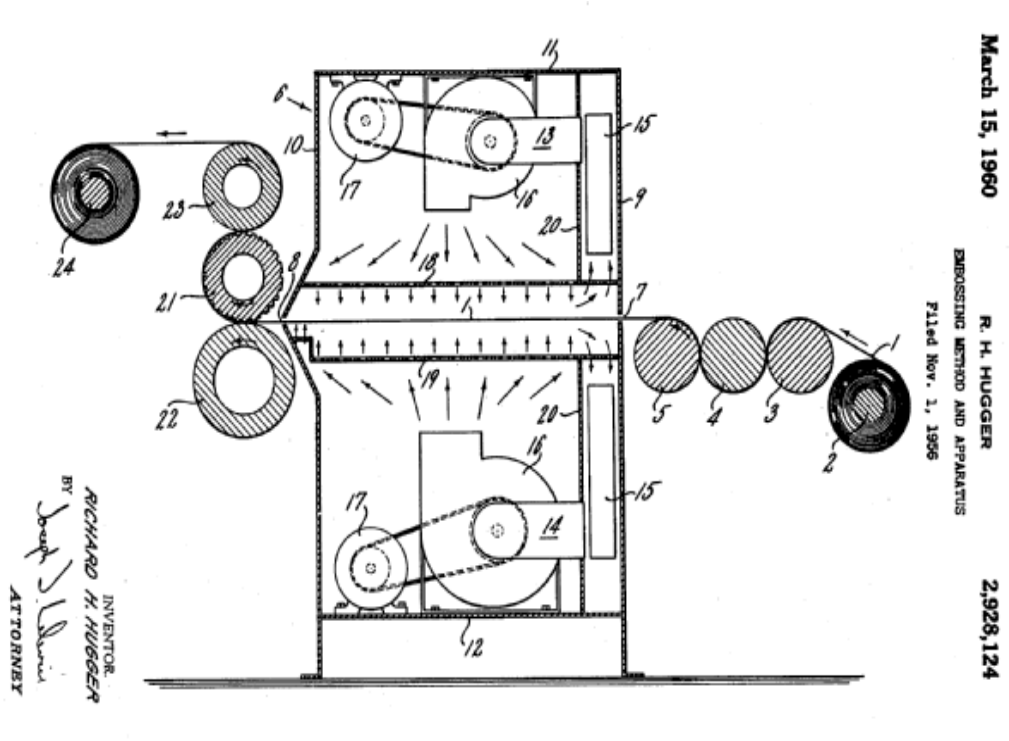

References

Limiting references

This place does not cover:

Heating preforms (film, sheet, plate) prior to thermoforming	B29C 51/421

B29B 13/024

{Hollow bodies, e.g. tubes or profiles}

Definition statement

This place covers:

Illustrative example of subject matter classified in B29B 13/024.

EP 2 233 269 A1

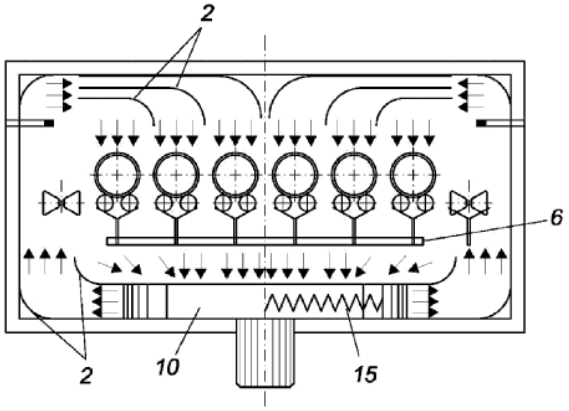

FIG. 4

Patent Application Publication Mar. 25, 2010 Sheet 4 of 7 US 2010/0072673 A1

Fig.6

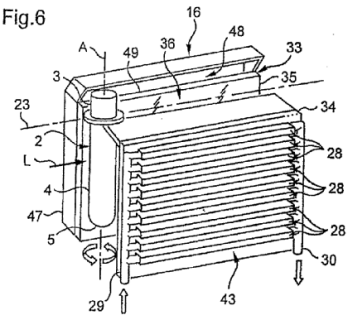

Fig.7

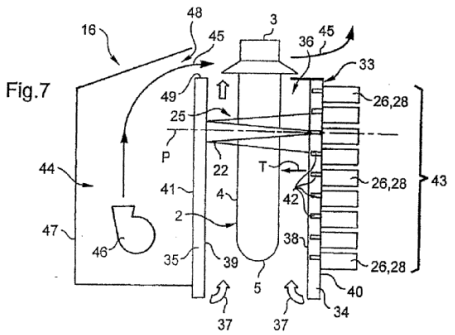

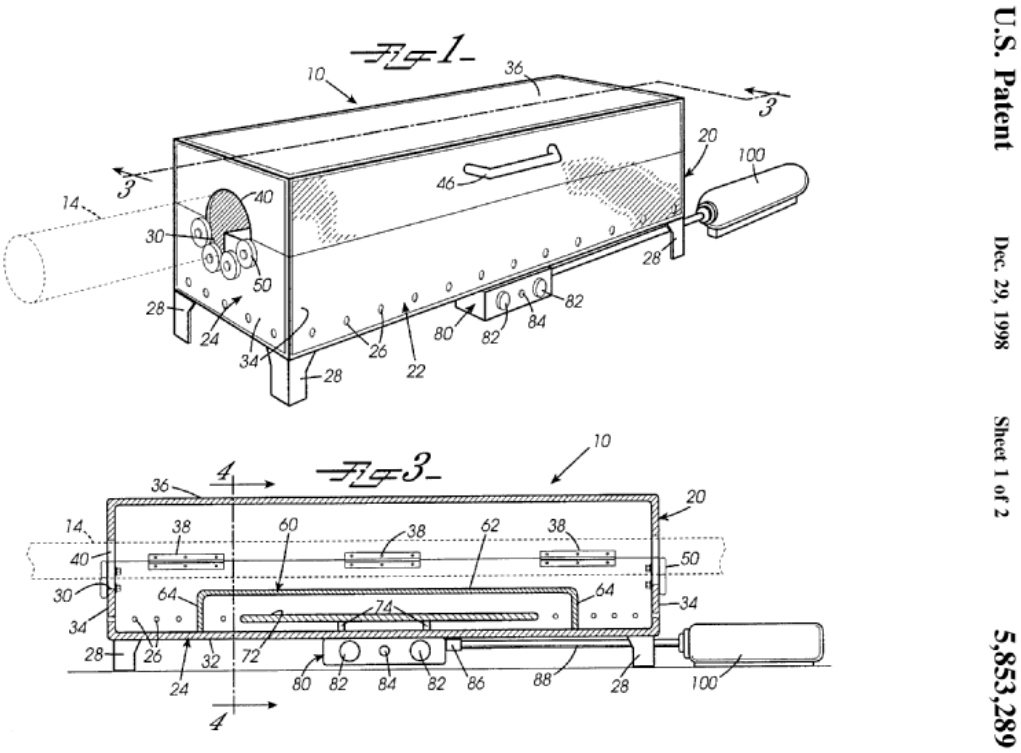

References

Limiting references

This place does not cover:

Heating a tubular preform prior to blow moulding	B29C 49/64
Ovens specially adapted for heating preforms or parisons	B29C 49/68

B29B 13/025

{Tube ends}

Definition statement

This place covers:

Illustrative example of subject matter classified in B29B 13/025.

U.S. Patent Apr. 1, 2003 Sheet 2 of 4 US 6,540,955 B1

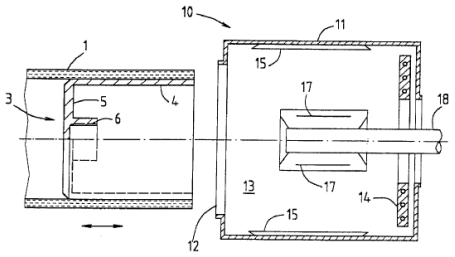

FIG. 2a

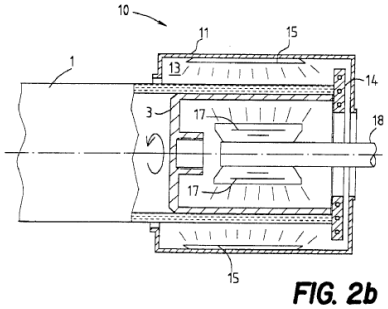

FIG. 2b

U.S. Patent Nov. 5, 2002 US 6,476,345 B1

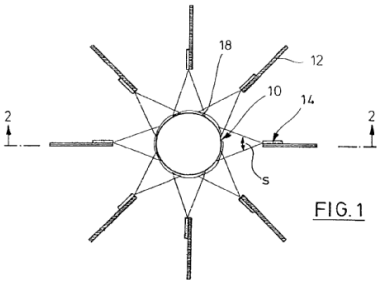

FIG. 1

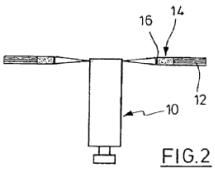

FIG.2

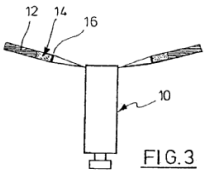

FIG.3

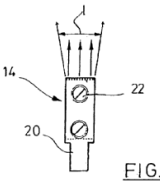

FIG.4

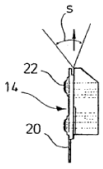

FIG.5

U.S. Patent Mar. 10, 1981 4,255,137

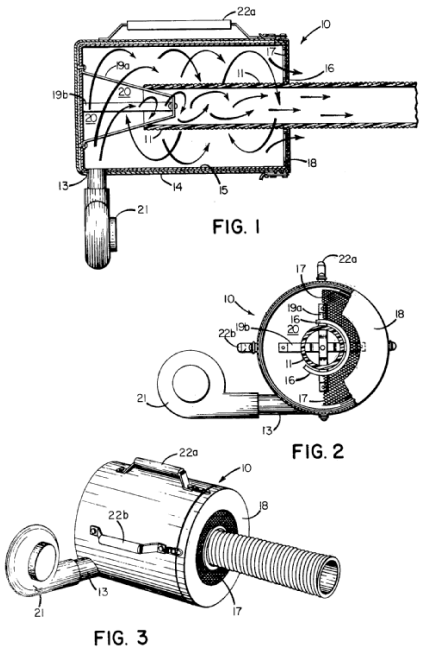

References

Limiting references

This place does not cover:

Shaping of tube ends, e.g. flanging, belling, closing; Apparatus therefor	B29C 57/00

B29B 13/04

by cooling {(cooling moulded articles or half products B29C 35/16)}

Definition statement

This place covers:

Illustrative example of subject matter classified in B29B 13/04.

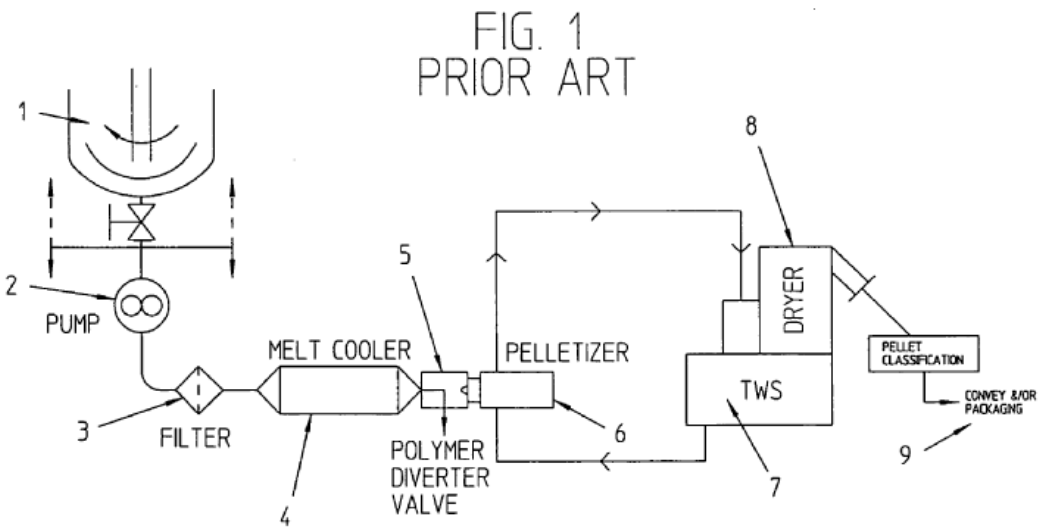

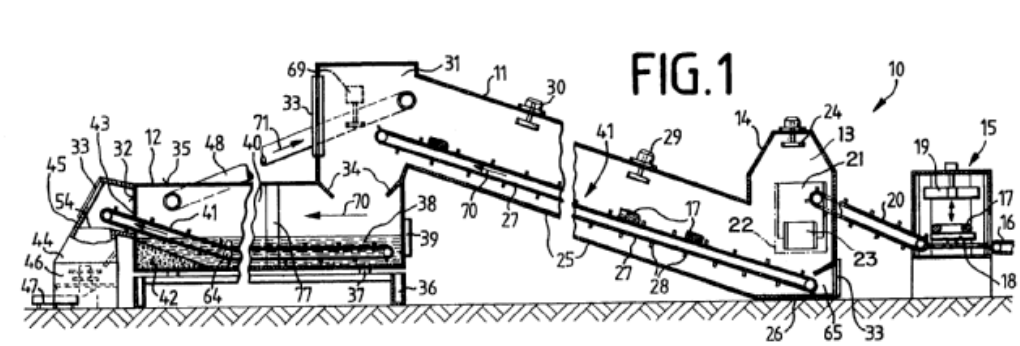

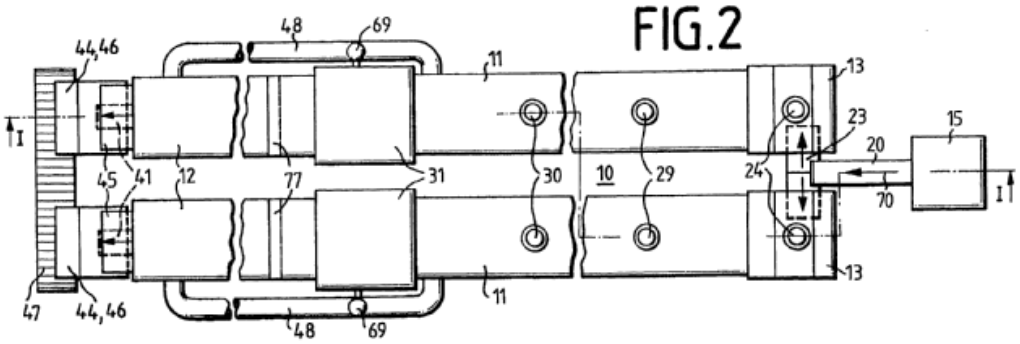

Patent Application Publication Dec. 13, 2007 Sheet 1 of 19 US 2007/0284771 A1

U.S. Patent Nov. 29, 1994 Sheet 1 of 4 5,368,240

B29B 13/045

{of powders or pellets}

Definition statement

This place covers:

Illustrative example of subject matter classified in B29B 13/045.

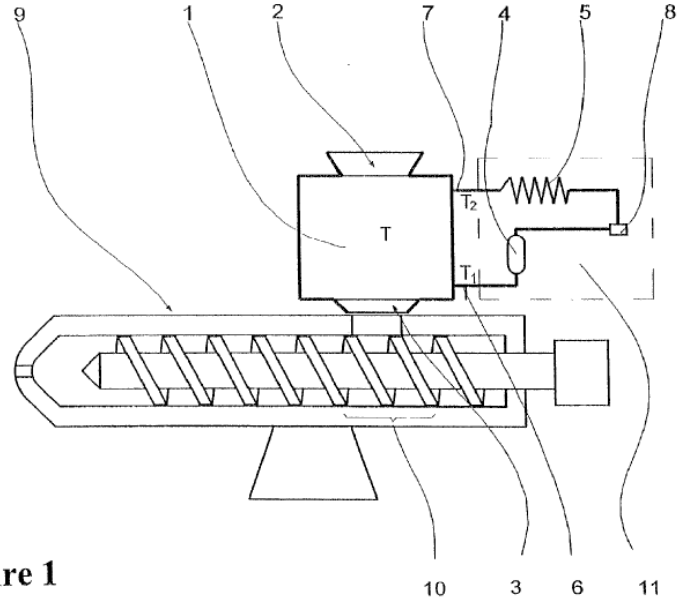

Figure 1

Patent Application Publication Jun. 20, 2002 US 2002/0074678 A1

U.S. Patent Jan. 3, 1978 Sheet 1 of 4 4,066,430

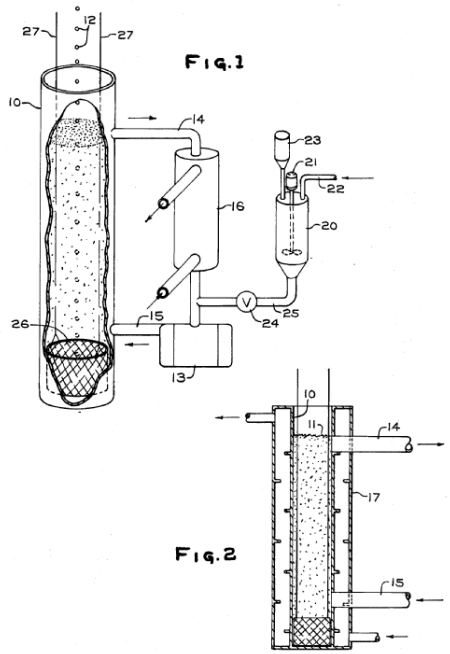

B29B 13/06

by drying (B29B 13/08 takes precedence {; drying moulded articles or half products B29C 37/0092})

Definition statement

This place covers:

Illustrative example of subject matter classified in B29B 13/06.

U.S. Patent Dec. 5, 1978 Sheet 1 of 5 4,127,945

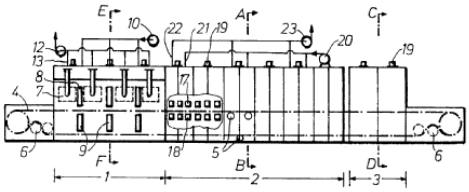

FIG. 1

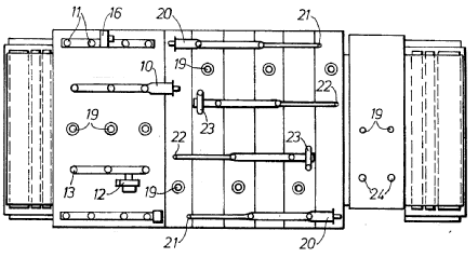

FIG. 2

B29B 13/065

{of powder or pellets}

Definition statement

This place covers:

Illustrative example of subject matter classified in B29B 13/065.

Patent Application Publication Dec. 6, 2007 US 2007/0277392 A1

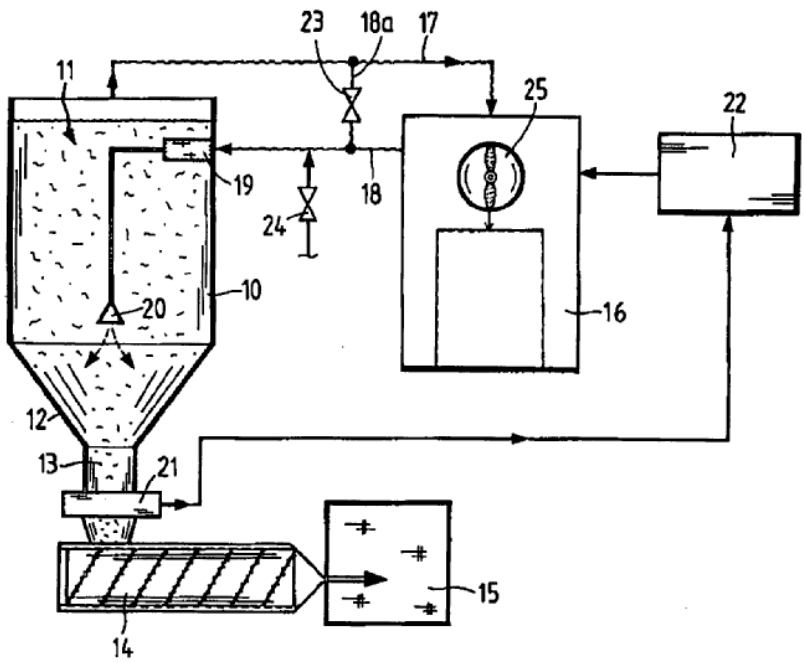

Patent Application Publication Jan. 1, 2004 Sheet 6 of 14 US 2004/0000069 A1

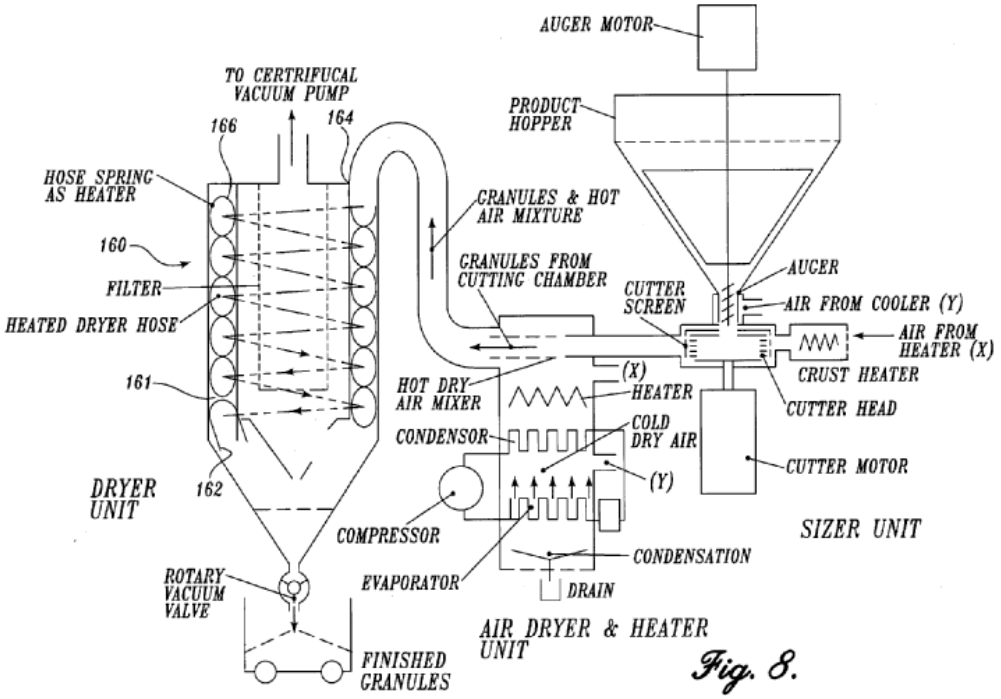

Fig. 8.

U.S. Patent Jun. 8, 2004 US 6,745,492 B1

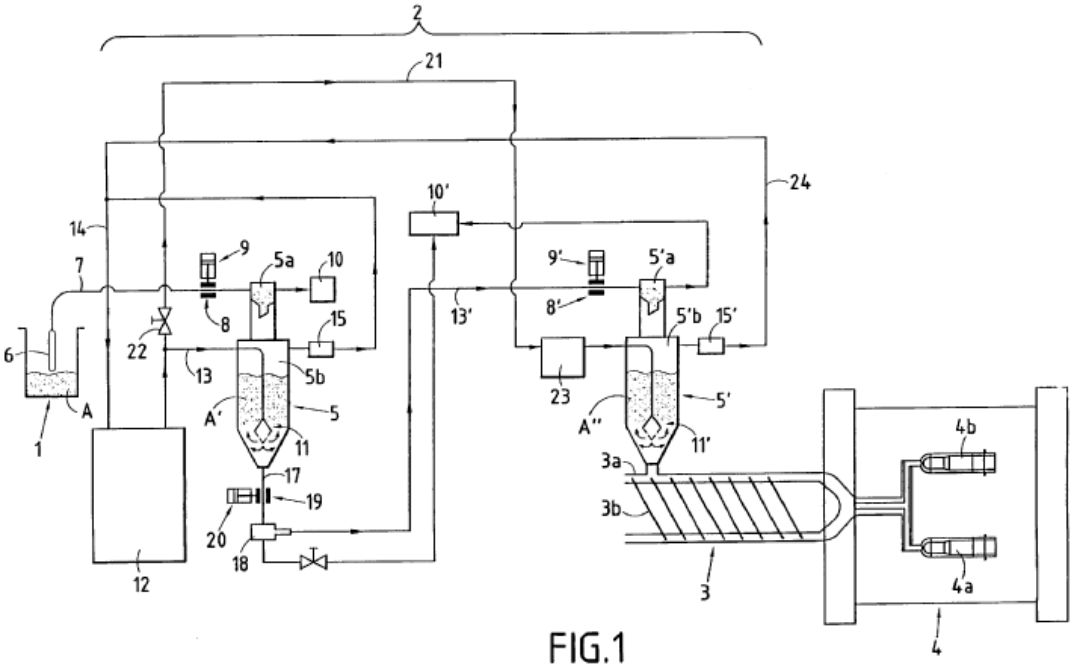

FIG.1

FIG. 1

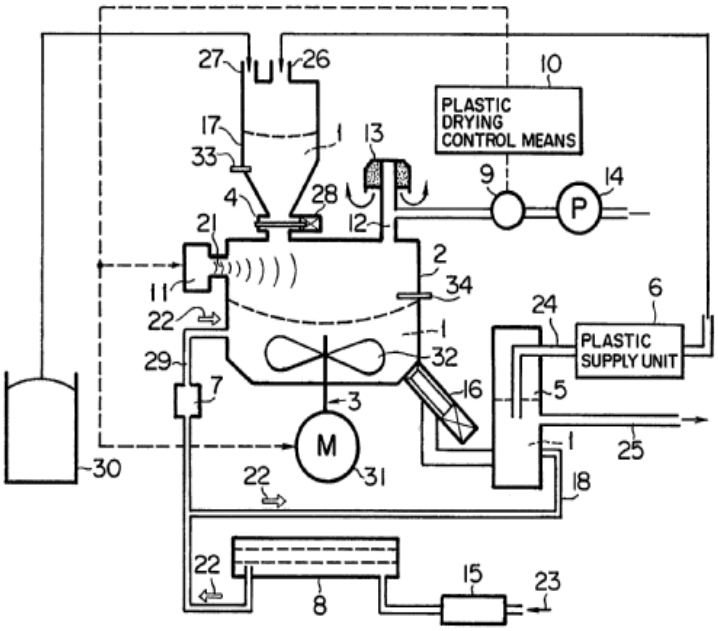

EP 0 437 267 A1

U.S. Patent Jul. 30, 1985 Sheet 1 of 5 4,531,308

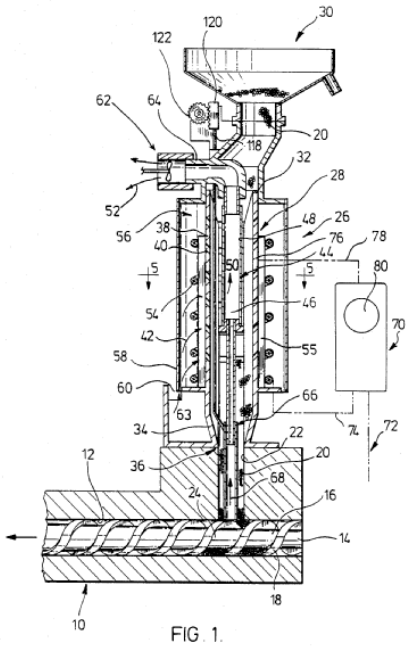

FIG. 1.

Feb. 17, 1970 D. L. KOLB ET AL 3,495,341
CONTINUOUS PROCESS FOR SURFACE DRYING POLYMER CHIPS AND ENCLOSED APPARATUS
Filed April 9, 1968

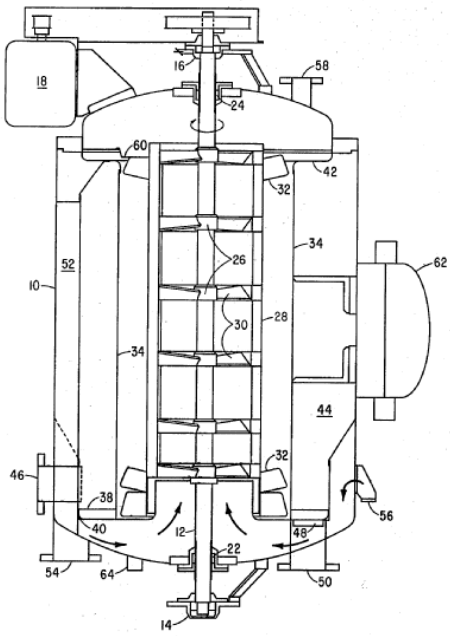

References

Informative references

Attention is drawn to the following places, which may be of interest for search:

Machines or apparatus for drying materials in loose, plastic, or fluidised form, e.g. granules, staple fibres, with progressive movement	F26B 17/00

B29B 13/08

by using wave energy or particle radiation

Definition statement

This place covers:

Illustrative example of subject matter classified in B29B 13/08.

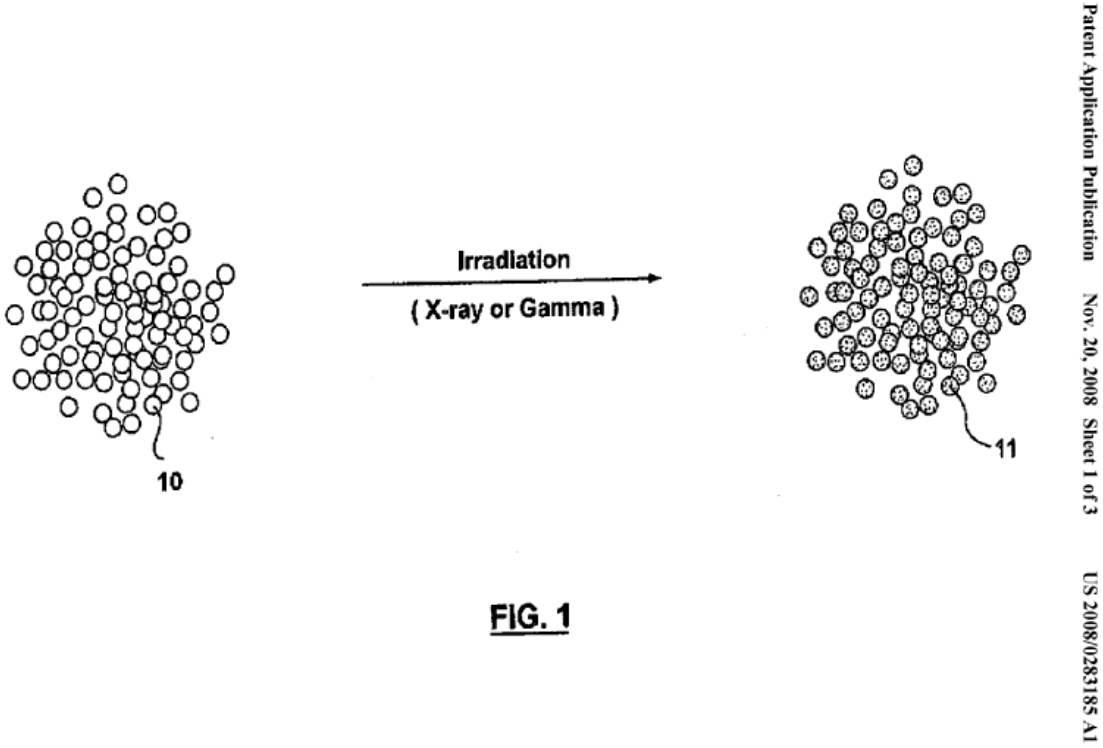

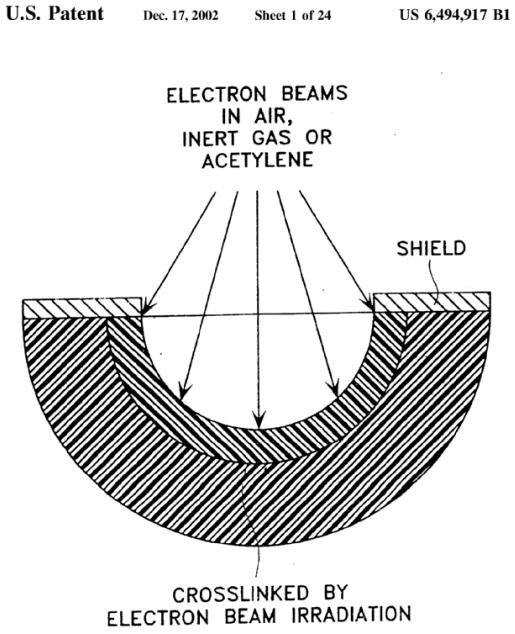

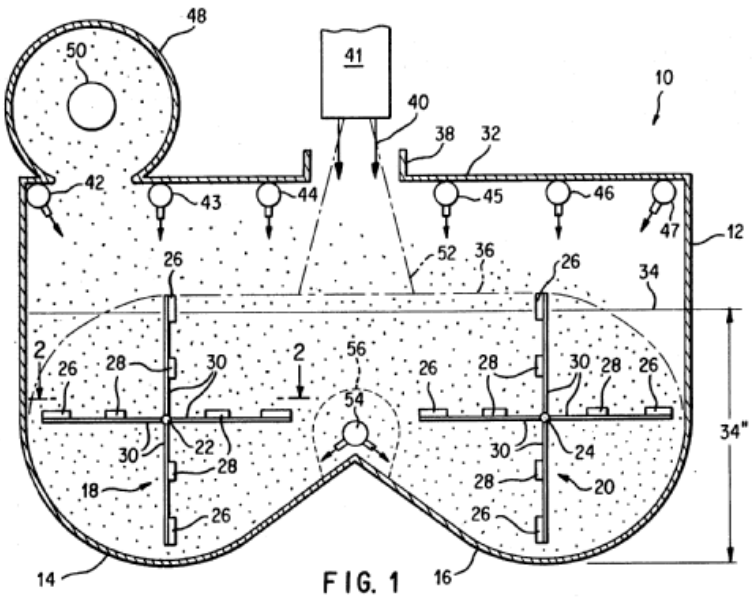

FIG. 1

U.S. Patent Sep. 22, 1992 Sheet 1 of 2 5,149,727

References

Informative references

Attention is drawn to the following places, which may be of interest for search:

Processes of treating or compounding macromolecular substances. Treatment by wave energy or particle radiation	C08J 3/28
Irradiation devices	G21K 5/00

B29B 13/10

by grinding, e.g. by triturating; by sieving; by filtering

Definition statement

This place covers:

The methods and devices for the mechanical pre-treatment of the plastic material to be shaped by grinding prior to the moulding operation.

Illustrative example of subject matter classified in B29B 13/10.

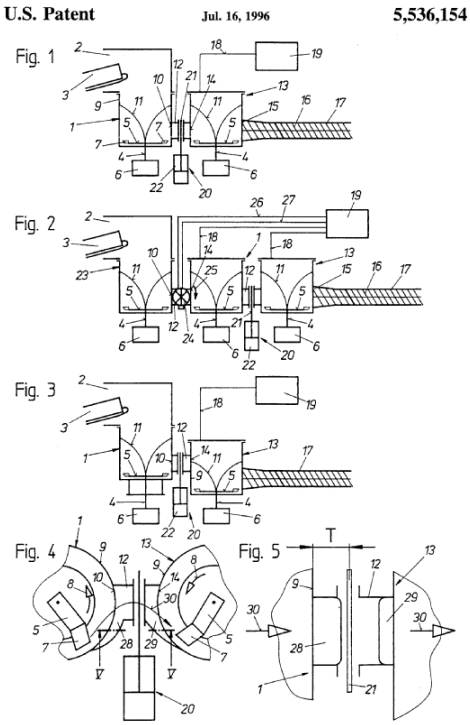

References

Informative references

Attention is drawn to the following places, which may be of interest for search:

Recovery of plastics or other constituents of waste material containing plastics. Disintegrating plastics (e.g. by milling)	B29B 17/04
Disintegrating by knives or other cutting or tearing members which chop material into fragments, specially adapted for disintegrating plastics	B02C 18/086, B02C 18/148

B29B 15/00

Pretreatment of the material to be shaped, not covered by groups B29B 7/00 - B29B 13/00

Definition statement

This place covers:

The methods and devices wherein the material undergoes a pre-treatment operation that is an operation that modifies the material to be shaped e.g. by moulding.

Illustrative example of subject matter classified in B29B 15/00.

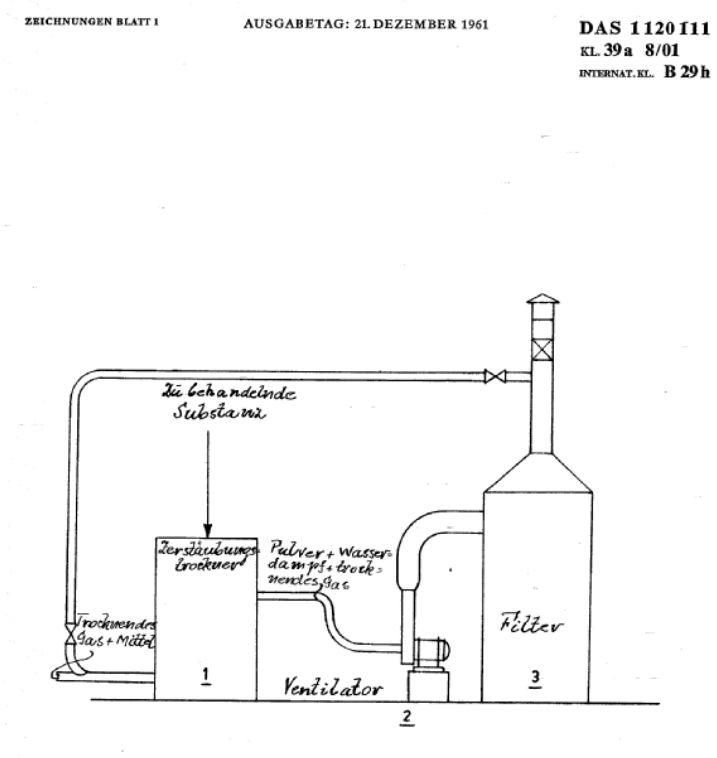

B29B 15/04

Coagulating devices

Definition statement

This place covers:

The methods and devices wherein the material undergoes a coagulation operation prior to final shaping wherein the mechanical aspect of the method or device is detailed.

References

Informative references

Attention is drawn to the following places, which may be of interest for search:

Treatment of rubber latex, coagulation	C08C 1/14
Treatment of polymer emulsions, coagulation	C08F 6/22

B29B 15/08

of reinforcements or fillers (chemical aspects C08J, C08K)

Definition statement

This place covers:

Surface modifications, normally chemical but also treatments like preheating or carving, of reinforcements or fillers typically to improve the adhesion with the matrix

B29B 15/105

{of reinforcement of definite length with a matrix in solid form, e.g. powder, fibre or sheet form (calendering B29C 70/506)}

References

Informative references

Attention is drawn to the following places, which may be of interest for search:

Treatments of textile materials by liquids, gases or vapours	D06B
Artificial leather obtained by covering fibrous webs with macromolecular material	D06N 3/00

B29B 15/122

{with a matrix in liquid form, e.g. as melt, solution or latex}

References

Informative references

Attention is drawn to the following places, which may be of interest for search:

Matrix in powder form	B29K 2105/251
Matrix in the form of sheet	B29K 2105/256

B29B 17/00

Recovery of plastics or other constituents of waste material containing plastics; ({volume reduction of waste plastics, e.g. by mechanical compacting or melting disposal of solid waste B09B;} chemical recovery C08J 11/00)

Definition statement

This place covers:

Processes as well as the corresponding machinery for recovering plastics, as well as other constituents of waste material containining plastics

References

Limiting references

This place does not cover:

Reuse of recycled material in moulding processes as such, e.g. in compression moulding	B29C

Informative references

Attention is drawn to the following places, which may be of interest for search:

General arrangement of separating plants for refuse	B03B 9/06
Volume reduction of waste plastics other than plastic containers	B09B

Special rules of classification

In this group including its subgroups, it is highly desirable to add the Indexing Codes B29K for the type of plastic material to be recycled, and the Indexing Codes B29L for the type of product to be recycled.

In this group including its subgroups, only the type of plastic material to be recycled shall be classified by the B29K Indexing Codes. Any non-recycled material, e.g. virgin material, which is added during the recycling process shall not be classified by such B29K Indexing Codes.

Synonyms and Keywords

In patent documents, the following words/expressions are often used as synonyms:

- "waste", "scrap", "recycling", "recycled", "recovery", "recovering", "salvage", "salvaged", "reclaim", "reclaimed", "reprocessed", "reprocessing", "regrind", "reground", "discard", "discarded", "discarding" and "rubbish"

B29B 17/0005

{Direct recuperation and re-use of scrap material during moulding operation, i.e. feed-back of used material}

Definition statement

This place covers:

Recycling processes, as well as the corresponing machinery, whereby the recovery of plastics is combined with the direct reuse of said material in a molding process.

Typical examples are:

- Re-use by regrinding the hardened runner/sprue and feeding it into the hopper of an injection moulding machine.
- Re-use by regrinding or directly feeding the side-trim in plastic film extrusion to the hopper of the extruder.

References

Informative references

Attention is drawn to the following places, which may be of interest for search:

Recovery of starting material, waste material or solvents during the manufacture of artificial filaments or the like, made of synthetic polymers	D01F 13/04

B29B 17/0026

{by agglomeration or compacting}

References

Informative references

Attention is drawn to the following places, which may be of interest for search:

Dietetic products with reduced nutritive value, by addition of substantially indigestible substances, i.e. Cellulose or derivatives	A23L 33/24
Making particle boards or fibreboards, with preformed covering layer	B27N 3/06
Making discontinuous sheets of paper, pulpboard or cardboard, or of wet web, for fibreboard production	D21F 13/00

B29B 17/0036

{of large particles, e.g. beads, granules, pellets, flakes, slices}

References

Informative references

Attention is drawn to the following places, which may be of interest for search:

Making granules	B29B 9/00

B29B 17/0042

{for shaping parts, e.g. multilayered parts with at least one layer containing regenerated plastic}

Definition statement

This place covers:

Recovery of plastics or other constituents of waste material containing plastics by an agglomeration or compacting process. The recovered material is used for shaping parts, e.g. compacting plastic waste particles in a heated compression mould for obtaining a discrete article. Possibly with the addition of a binding agent, i.e. urethane.

References

Informative references

Attention is drawn to the following places, which may be of interest for search:

Destroying solid waste or transforming solid waste by agglomeration, binding or encapsulation using an organic binder or matrix	B09B 3/0033
Layered products essentially comprising synthetic resin made from or containing mainly scrap material	B32B 2272/00

Special rules of classification

In this group, it is highly recommended to add additional classification in the shaping technique concerned, e.g. B29C 43/00 for compression moulding, B29C 45/00 for injection moulding.

B29B 17/0047

{Compacting complete waste articles}

Definition statement

This place covers:

Recovery of plastics or other constituents of waste material containing plastics by an agglomeration or compacting process, whereby a complete wasted article is compacted, e.g. recovery of plastic containers, e.g. PET bottles by volume reduction.

B29B 17/0052

{Hollow articles, e.g. bottles}

References

Informative references

Attention is drawn to the following places, which may be of interest for search:

Presses specially adapted for consolidating scrap metal or for compacting used cars	B30B 9/321

B29B 17/02

Separating plastics from other materials

Definition statement

This place covers:

Recovery of plastics or other constituents of waste material containing plastics whereby said recovered material is separated from other materials, e.g. one type of plastics, e.g. PE is seperated from another type of plastics, e.g. PA, by density separation in a water bath.

References

Informative references

Attention is drawn to the following places, which may be of interest for search:

Separating by pneumatic tables or by pneumatic jigs	B03B 4/00
Wet separating by sink-float separation	B03B 5/28

B29B 17/021

{using local heating of the reinforcement}

Definition statement

This place covers:

Recovery of plastics or other constituents of waste material containing plastics whereby the matrix material is separated selectively from the reinforcements by destroying the interface bound before desintegrating the matrix to particles or powder using local heating of the reinforcement, e.g. heating of tires or conveyor belts, e.g. by induction heating, for softening the rubber matrix around the then hot steel wires.

B29B 17/04

Disintegrating plastics, {e.g. by milling} (B29B 9/02, B29B 11/02, B29B 13/10, {B29B 17/02} take precedence)

Definition statement

This place covers:

Processes as well as the corresponding machinery for recovering plastics, as well as other constituents of waste material containining plastics, whereby the plastic material is disintegrated.

References

Informative references

Attention is drawn to the following places, which may be of interest for search:

Disintegrating by knives or other cutting or tearing members which chop material into fragments	B02C 18/00
Especially adapted for disintegrating plastics, e.g. cinematographic films	B02C 18/086
For plastic bottles	B02C 19/0093
Cutting through work characterised by the nature or movement of the cutting member; Apparatus or machines therefor; Cutting members therefor	B26D 1/00
Especially adapted for cutting rubber	B26D 3/003
For cutting used tyres	B26D 3/005

Special rules of classification

In this group including its undergroups, it is highly desirable to add additional B29B 2017/0424 Indexing Codes for the type of disintegrating technique.