B21J

FORGING; HAMMERING; PRESSING METAL; RIVETING; FORGE FURNACES (rolling of metal B21B; making particular products by forging or pressing B21K; cladding or plating B23K; finishing surfaces by hammering B23P 9/04; compacting surfaces by blasting with particulate material B24C 1/10; general features of presses, presses for consolidating scrap B30B; furnaces in general F27)

Definition statement

This place covers:

General metal forging or pressing methods, devices and furnaces. Riveting is traditionally part of forging.

Forging is a manufacturing process involving the shaping in the thickness of a solid metal billet using localized compressive forces at a temperature below fusion.

This subclass subdivides into:

Methods	B21J 1/00- B21J 5/00
Machines	B21J 7/00- B21J 13/00
Furnaces; Blacksmiths requisites	B21J 17/00- B21J 19/00
Riveting	B21J 15/00

Relationships with other classification places

B21J vs. B21K

- Both these classes comprise forging methods (B21J 1/00 - B21J 5/00 and B21K 1/00 - B21K 23/04). The forging methods of B21J relate to general aspects of forging, while the forging methods of B21K are product oriented.

Example: a forging process for manufacturing a coupling member with splines by closed-die forging, would be classified in B21K 1/762 (making a forged coupling member), in B21J 5/12 (forging profiles) and B21J 5/02 (die forging).

- B21J comprises forging machines (B21J 7/00 - B21J 13/06) and accessories for forging machines (B21J 13/08 - B21J 19/04). Further accessories are to be found in B21K (handling devices in B21K 27/00, arrangements for cooling and heating B21K 29/00, control devices specially adapted for positioning tool carriers B21K 31/00).

References

Limiting references

This place does not cover:

Methods of forging specific products	B21K 1/00- B21K 23/04
Finishing surfaces by hammering	B23P 9/04

Informative references

Attention is drawn to the following places, which may be of interest for search:

Rolling of metal	B21B
Bending or deep-drawing	B21D

Uniting components by forging	B21K 25/00
Handling devices for forging	B21K 27/00
Heating or cooling devices for forging	B21K 29/00
Control devices for forging	B21K 31/00
Casting	B22C, B22D
Powder metallurgy	B22F
Cladding or plating	B23K
Compacting surfaces by blasting with particulate material	B24C 1/10
Working of plastic material	B29
Presses in general	B30B
Embossing for making artistic work	B44B
Furnaces in general	F27

B21J 1/00

Preparing metal stock {or similar ancillary operations prior, during or post forging, e.g. heating or cooling (pretreatment for rolling B21B 1/02, B21B 15/0035)}

Definition statement

This place covers:

Forging processes for producing elementary billet shapes, either as rough forging or as preliminary forging; heating and cooling processes

References

Informative references

Attention is drawn to the following places, which may be of interest for search:

Pretreatment by rolling	B21B 1/02, B21B 15/0035

B21J 1/02

Preliminary treatment of metal stock without particular shaping, e.g. salvaging segregated zones, forging or pressing in the rough (modifying the physical properties by deformation C21D 7/00, C22F 1/00)

Definition statement

This place covers:

Processes for preliminary treatment of metal stock without particular shaping, e.g. salvaging segregated zones, descaling by forging, changing the material structure.

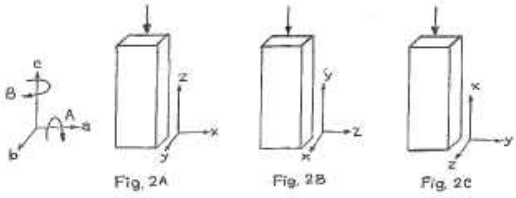

Remark: The title of this group mentions "forging in the rough", which is the subject of B21J 1/04. Thus it is considered that B21J 1/04 takes precedence.

References

Limiting references

This place does not cover:

Forging or pressing in the rough	B21J 1/04
Modifying the physical properties of iron or steel by deformation or heat treatment	C21D 7/00, C22F 1/00

B21J 1/04

Shaping in the rough solely by forging or pressing

Definition statement

This place covers:

Processes for shaping in the rough, i.e. making basic shapes (square, round), especially for billets leaving the continuous casting line.

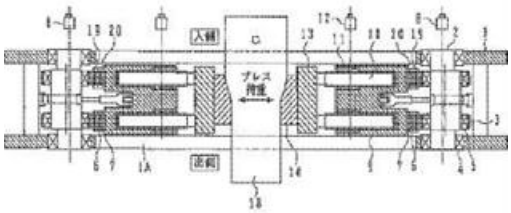

References

Limiting references

This place does not cover:

Preliminary treatment of metal stock without particular shaping	B21J 1/02
Combination of metal rolling and forging	B21B 15/0035

B21J 1/06

Heating or cooling methods or arrangements specially adapted for performing forging or pressing operations {(B21J 5/063 takes precedence)}

Definition statement

This place covers:

Processes for heating or cooling before or during forging

References

Limiting references

This place does not cover:

Friction heat forging	B21J 5/063
Forging furnaces	B21J 17/00
Arrangements for heating or cooling during forging	B21K 29/00

Informative references

Attention is drawn to the following places, which may be of interest for search:

Cooling or heating metal sheets for or during bending or deep drawing	B21D 37/16

B21J 3/00

Lubricating during forging or pressing (lubricating in general F16N)

Definition statement

This place covers:

Processes for lubrication forging material or dies.

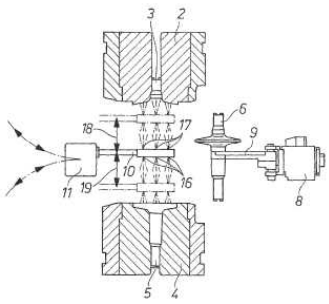

.

References

Limiting references

This place does not cover:

Arrangements for lubricating during forging	B21K 29/00

Informative references

Attention is drawn to the following places, which may be of interest for search:

Lubricating during pressing metal sheets	B21D 37/18
Lubricating other machines	B23Q 11/10
Lubricating presses in general	B30B 15/0088
Lubricants	C10M
Lubricating in general	F16N

B21J 5/00

Methods for forging, hammering, or pressing (for working sheet-metal or metal tubes, rods, or profiles B21D; for working wire B21F); Special equipment or accessories therefor

Definition statement

This place covers:

Method for forging using open dies.

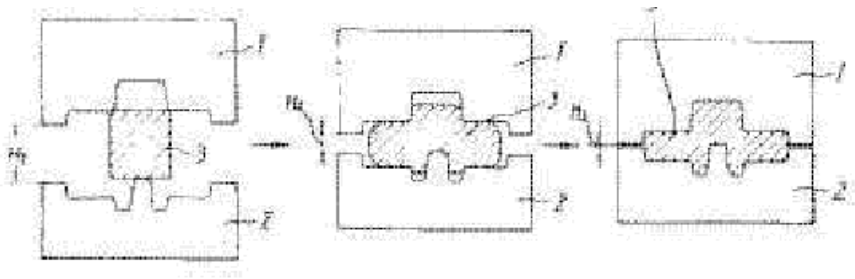

References

Limiting references

This place does not cover:

Preliminary forging	B21J 1/02
Shaping in the rough	B21J 1/04
Working wire by forging	B21F

Informative references

Attention is drawn to the following places, which may be of interest for search:

Working metal sheet, tubes, rods, or profiles	B21D

B21J 5/02

Die forging; Trimming by making use of special dies {; Punching during forging}

Definition statement

This place covers:

- Method for forging using closed dies.

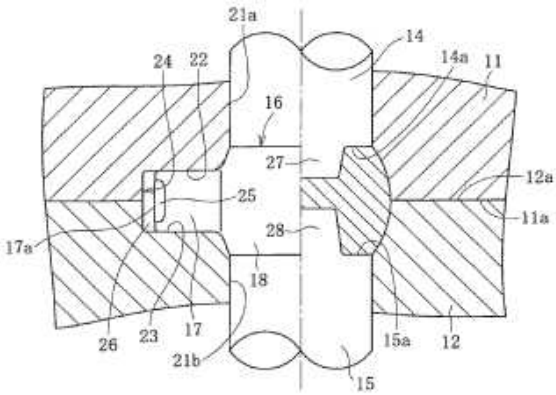

- Trimming using dies.

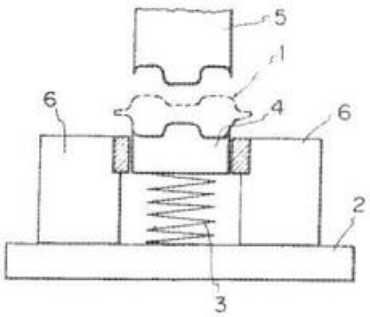

References

Informative references

Attention is drawn to the following places, which may be of interest for search:

Extrusion of metal	B21C 23/00

B21J 5/04

by directly applied fluid pressure or explosive action

Definition statement

This place covers:

Methods for forging, hammering or pressing by directly applied fluid pressure or explosive action

B21J 5/06

for performing particular operations

Definition statement

This place covers:

Methods for forging, hammering or pressing by performing particular operations

B21J 5/063

{Friction heat forging (friction heat riveting B21J 15/027)}

Definition statement

This place covers:

Methods for forming a workpiece by pressing, a portion of the workpiece being locally heated by friction against the working tool

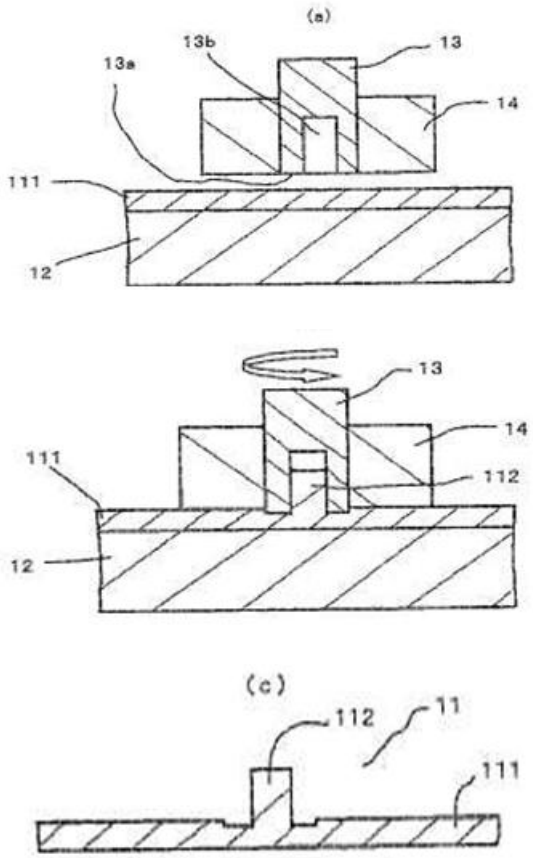

References

Informative references

Attention is drawn to the following places, which may be of interest for search:

Friction heat riveting	B21J 15/027
Uniting components by friction heat forging	B21K 25/005
Friction stir welding	B23K 20/12

B21J 5/066

{Flow drilling}

Definition statement

This place covers:

Methods for forming a hole into a workpiece by pressing a forming tool rotating at high speed, the pressed area being locally heated by friction

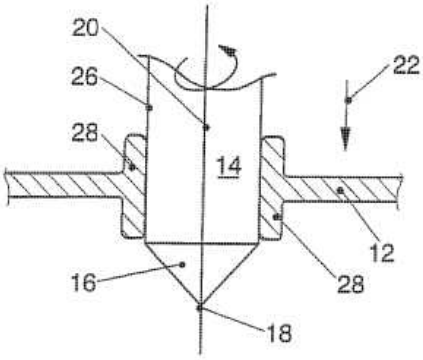

References

Limiting references

This place does not cover:

Forming branched tubes by flow drilling	B21C 37/298

B21J 5/08

Upsetting

Definition statement

This place covers:

Methods for increasing the cross section of an elongated workpiece by axial forging or pressing

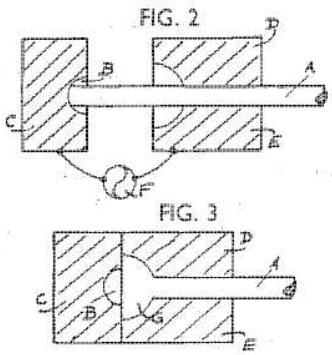

References

Limiting references

This place does not cover:

Upsetting presses	B21J 9/06- B21J 9/08

B21J 5/10

Piercing billets (in combination with extrusion B21C 23/00)

Definition statement

This place covers:

Methods for piercing a billet using a forging or pressing tool

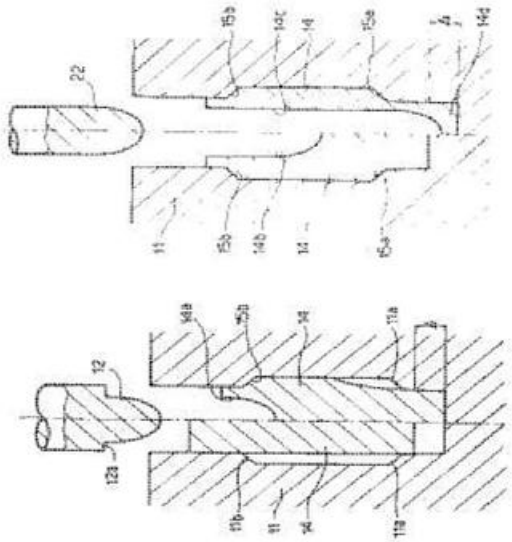

References

Limiting references

This place does not cover:

Piercing presses	B21J 9/04
Piercing in combination with extrusion	B21C 23/00

B21J 5/12

Forming profiles on internal or external surfaces (making screw-thread by forging, pressing, or hammering B21K)

Definition statement

This place covers:

Methods for making profiles, e.g. grooves, splines, on internal or external surfaces of a workpiece

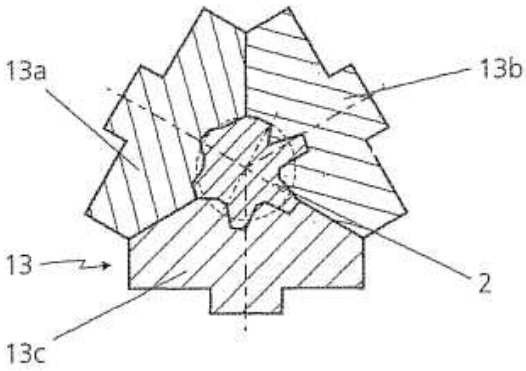

References

Informative references

Attention is drawn to the following places, which may be of interest for search:

Methods for forging gears	B21K 1/30
Methods for forging screw-threads	B21K 1/56
Methods for forging profiles on thin or sheet like metal billets	B21K 23/00

B21J 7/00

Hammers; Forging machines with hammers or die jaws acting by impact (hand hammers B25D; electrical features in section H)

Definition statement

This place covers:

Forging hammers. Hammers act by impact against the workpiece, each hammer stroke lasting about some milliseconds.

References

Limiting references

This place does not cover:

Forging presses	B21J 9/00
Deforming metal sheet by hammering	B21D 31/06
Hand hammers	B25D

B21J 7/02

Special design or construction

Definition statement

This place covers:

Forging hammers of particular design or construction

B21J 7/04

Power hammers

Definition statement

This place covers:

Hammers with a drive to accelerate the fall of the tool.

References

Limiting references

This place does not cover:

Drives for power hammers	B21J 7/22

B21J 7/06

Drop hammers

Definition statement

This place covers:

Hammers without a drive to accelerate the fall of the tool. Acceleration is only due to gravity.

References

Limiting references

This place does not cover:

Drives for drop hammers	B21J 7/36

B21J 7/08

with rigidly-guided hammer

Definition statement

This place covers:

Drop hammers with rigidly guided hammer.

B21J 7/10

with both drive and hammer connected to a fulcrumed lever, e.g. tail hammers

Definition statement

This place covers:

Hammers characterised by the fact that drive and hammer a connected via a fulcrumed lever, e.g. tail hammer

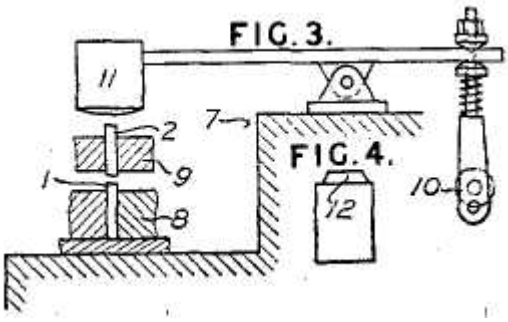

B21J 7/12

the lever being a spring, i.e. spring hammers

Definition statement

This place covers:

Hammers characterised by the fact that drive and hammer a connected via a fulcrumed lever, said fulcrumed lever being a spring, e.g. spring hammers.

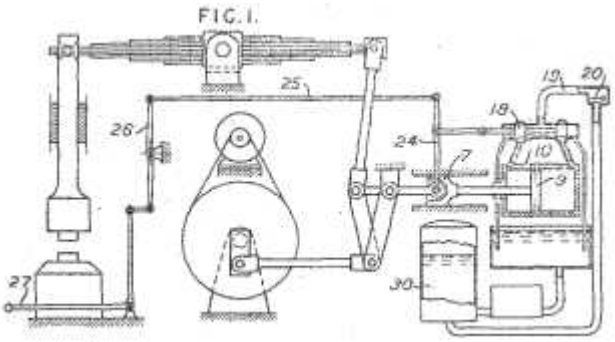

B21J 7/14

Forging machines working with several hammers

Definition statement

This place covers:

Hammers of the type having more than one moving hammer.

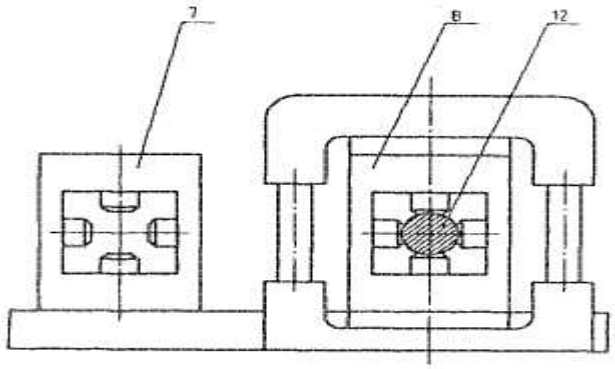

References

Informative references

Attention is drawn to the following places, which may be of interest for search:

Hammers with both hammer and anvil moving	B21J 7/34

B21J 7/145

{the hammers being driven by a rotating annular driving member}

Definition statement

This place covers:

Hammers of the type having several radially striking hammers, actuated by the rotation of an annular member. Although this is not excluded, the hammers are usually not rotating.

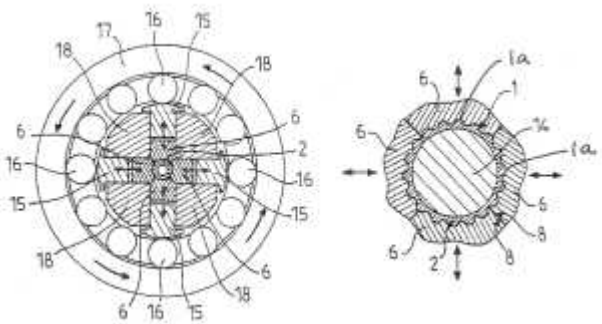

References

Informative references

Attention is drawn to the following places, which may be of interest for search:

Hammers in rotary arrangements	B21J 7/16

B21J 7/16

in rotary arrangements

Definition statement

This place covers:

Hammers of the type having several radially striking hammers, actuated by their rotation inside an annular member. Although this is not excluded, the annular member is usually not rotating.

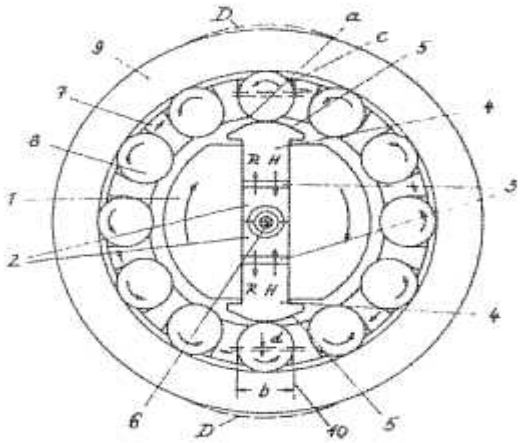

References

Informative references

Attention is drawn to the following places, which may be of interest for search:

Hammers actuated by a rotating member	B21J 7/145

B21J 7/18

Forging machines working with die jaws, e.g. pivoted, movable laterally of the forging or pressing direction, e.g. for swaging

Definition statement

This place covers:

Hammers of the type carrying die jaws, e.g. pivoted, movable laterally of the forging or pressing direction.

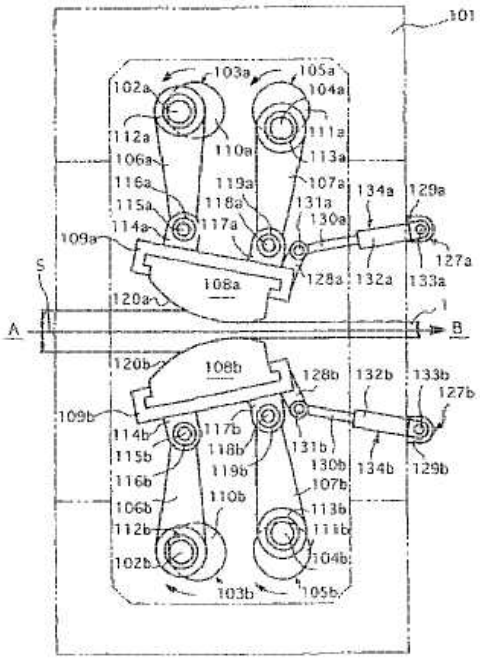

References

Limiting references

This place does not cover:

Preliminary treatment by forging	B21J 1/02
Forging in the rough	B21J 1/04

B21J 7/22

for power hammers

Definition statement

This place covers:

Drives for hammers of the type accelerating the tool towards the workpiece.

References

Informative references

Attention is drawn to the following places, which may be of interest for search:

Power hammers	B21J 7/04

B21J 7/24

operated by steam, air, or other gaseous pressure

Definition statement

This place covers:

Power hammer drives of the type operated by steam, air or other gaseous pressure.

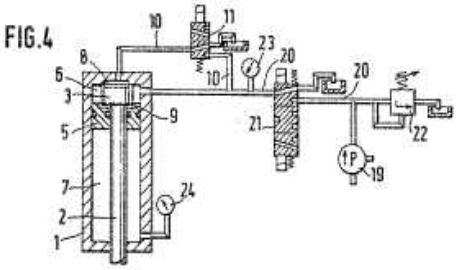

B21J 7/26

operated by internal combustion

Definition statement

This place covers:

Power hammer drives of the type operated by internal combustion, e.g. a diesel engine.

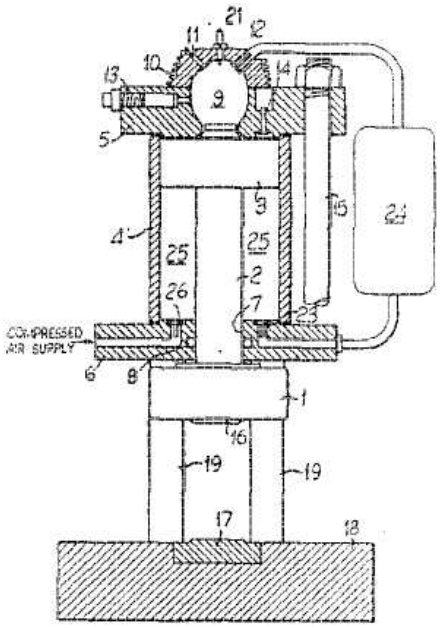

B21J 7/28

operated by hydraulic or liquid pressure

Definition statement

This place covers:

Power hammer drives of the type operated by hydraulic or liquid pressure, e.g. water

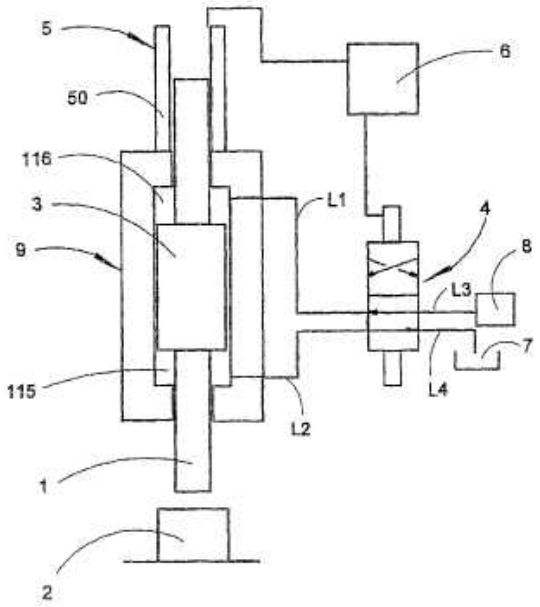

B21J 7/30

operated by electro-magnets

Definition statement

This place covers:

Power hammer drives of the type operated by electro-magnets

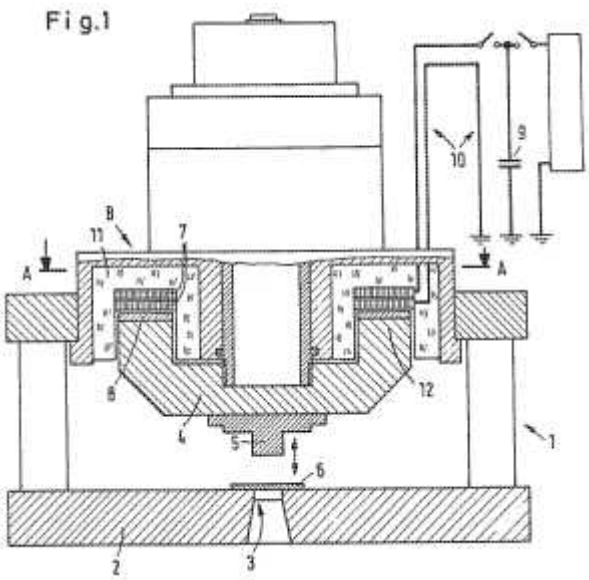

References

Limiting references

This place does not cover:

Power hammers operated by an electric motor	B21J 7/32

B21J 7/32

operated by rotary drive, e.g. by electric motor

Definition statement

This place covers:

Power hammer drives of the type operated by a rotary drive, e.g. by electric motor.

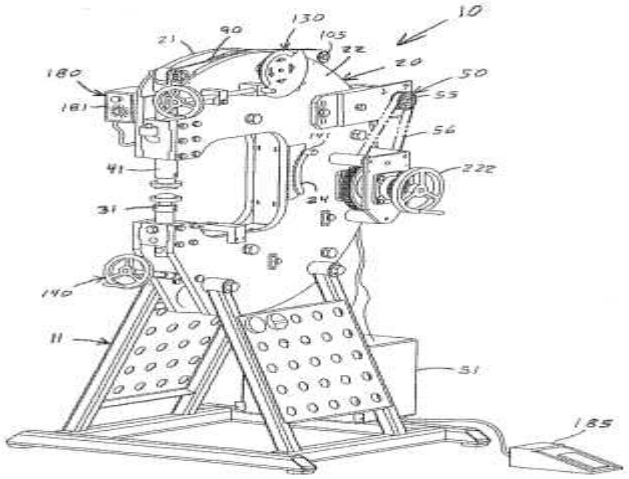

References

Limiting references

This place does not cover:

Power hammers operated by electro-magnets	B21J 7/30

B21J 7/34

operating both the hammer and the anvil, so-called counter-tup

Definition statement

This place covers:

Power hammer of the type the hammer and the anvil are operated

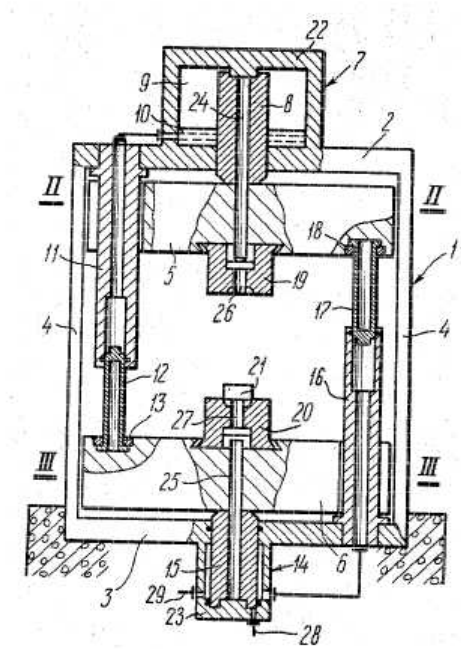

References

Informative references

Attention is drawn to the following places, which may be of interest for search:

Machines working with several hammers	B21J 7/14

B21J 7/36

for drop hammers

Definition statement

This place covers:

Drives for drop hammers, i.e. of the type lifting the hammer after the forging stroke (falling movement of the hammer is only due to gravity)

B21J 7/44

equipped with belts, ropes, cables, chains

Definition statement

This place covers:

Drop hammers operated by rotary drive, the hammer being linked to the drive via a belt rope, cable, chain or board.

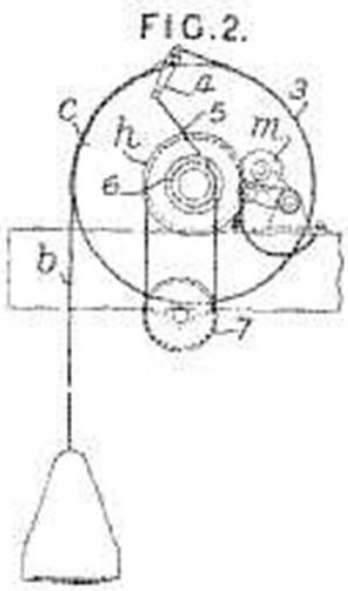

B21J 7/46

Control devices specially adapted to forging hammers, not restricted to one of the preceding subgroups

Definition statement

This place covers:

Control devices specially adapted to forging hammers

References

Limiting references

This place does not cover:

Control devices for tool carriers	B21K 31/00

Informative references

Attention is drawn to the following places, which may be of interest for search:

Cyclically operated valves	F01L
Automatic controllers	G05B 11/00

B21J 9/00

Forging presses

Definition statement

This place covers:

Forging presses. Presses act on the workpiece by the sole action of pressing, a pressing stroke lasting about some seconds.

References

Limiting references

This place does not cover:

Forging hammers	B21J 7/00

B21J 9/02

Special design or construction

Definition statement

This place covers:

Forging presses of particular design or construction

B21J 9/022

{multi-stage forging presses (handling devices B21K 27/00)}

Definition statement

This place covers:

Forging press carrying several dies, each die corresponding to a workpiece manufacturing step.

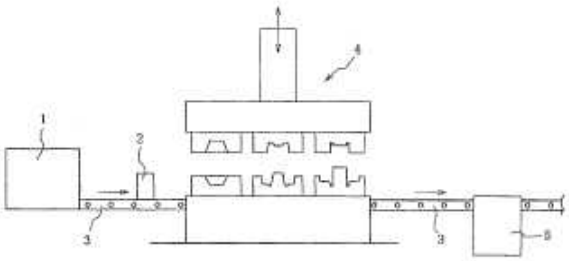

References

Informative references

Attention is drawn to the following places, which may be of interest for search:

Bolt, rivet, nut forging processes	B21K 1/44- B21K 1/70
Handling devices	B21K 27/00

B21J 9/025

{with rolling or wobbling dies}

Definition statement

This place covers:

Forging presses carrying rolling or wobbling dies

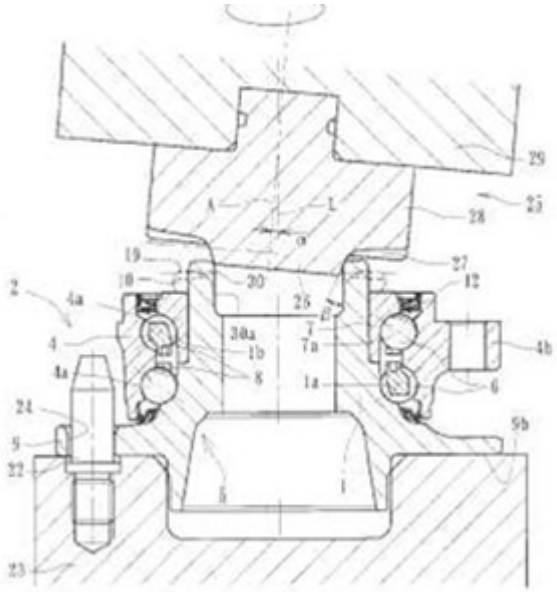

References

Informative references

Attention is drawn to the following places, which may be of interest for search:

Riveting machine of the wobbling type	B21J 15/12

B21J 9/04

Piercing presses

Definition statement

This place covers:

Forging presses specially designed for piercing workpieces

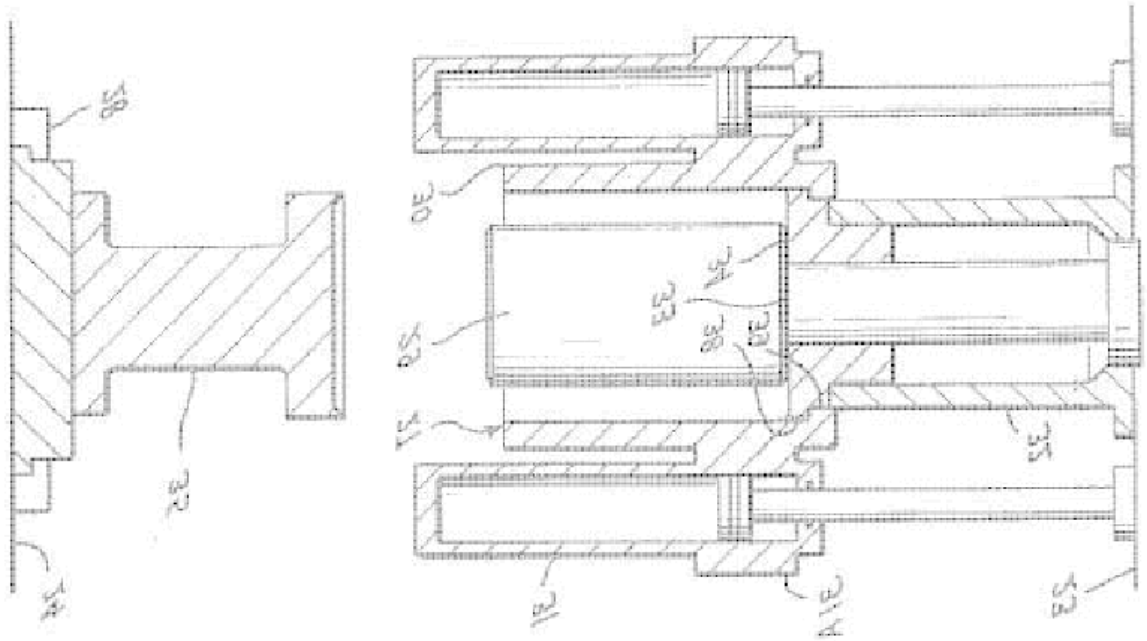

References

Informative references

Attention is drawn to the following places, which may be of interest for search:

Piercing billets	B21J 5/10

B21J 9/06

Swaging presses; Upsetting presses

Definition statement

This place covers:

Forging presses specially adapted for swaging.

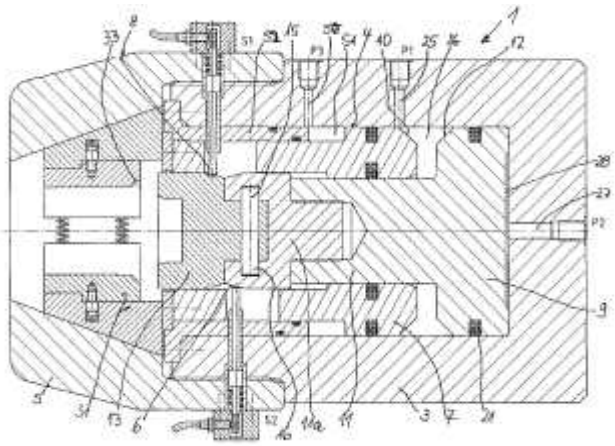

Forging presses specially adapted for upsetting.

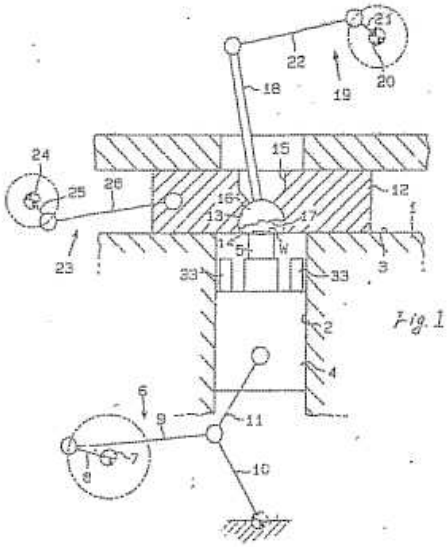

References

Informative references

Attention is drawn to the following places, which may be of interest for search:

Methods of upsetting	B21J 5/08

B21J 9/08

equipped with devices for heating the work-piece (electric heating elements H05B)

Definition statement

This place covers:

Forging presses specially adapted for upsetting and equipped with devices for heating the workpiece.

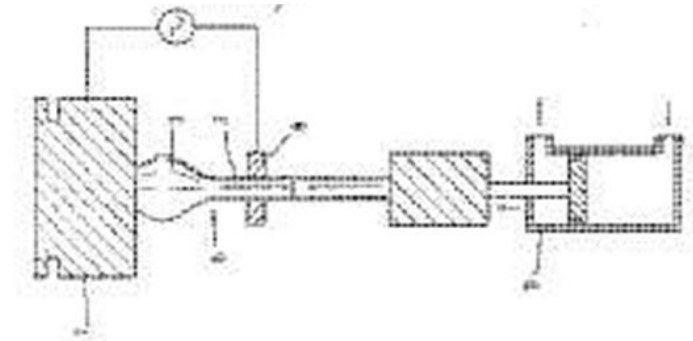

References

Informative references

Attention is drawn to the following places, which may be of interest for search:

Electric heating elements	H05B

B21J 9/12

operated by hydraulic or liquid pressure

Definition statement

This place covers:

Drives for forging presses operated by hydraulic or liquid pressure

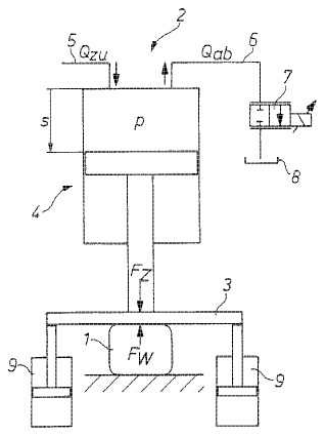

B21J 9/16

in conjunction with steam or gas power

Definition statement

This place covers:

Drives for forging presses operated by hydraulic or liquid pressure in conjunction with steam or gas power. Are also classified there drives for forging presses operated by steam or gas power.

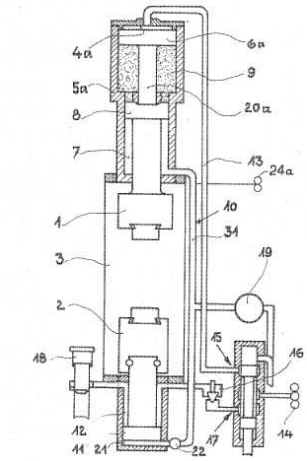

B21J 9/18

operated by making use of gearing mechanisms, e.g. levers, spindles, crankshafts, eccentrics, toggle-levers, rack bars

Definition statement

This place covers:

Drives for forging presses operated by gearing mechanisms (levers, spindles, crankshafts, eccentrics, toggle-lever, rack bars...)

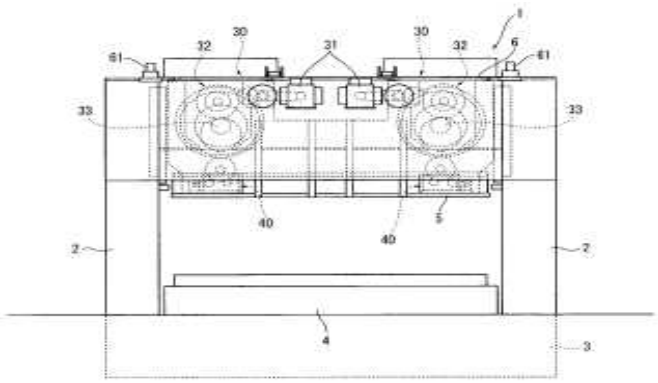

B21J 9/20

Control devices specially adapted to forging presses not restricted to one of the preceding subgroups

Definition statement

This place covers:

Control devices specially adapted for forging presses.

References

Informative references

Attention is drawn to the following places, which may be of interest for search:

Control devices for tool carriers	B21K 31/00
Cyclically operated valves	F01L
Automatic controllers	G05B 11/00

B21J 11/00

Forging hammers combined with forging presses; Forging machines with provision for hammering and pressing

Definition statement

This place covers:

Machines combining aspects of forging hammers and forging presses

References

Informative references

Attention is drawn to the following places, which may be of interest for search:

Forging hammers per se	B21J 7/00
Forging presses per se	B21J 9/00

B21J 13/00

Details of machines for forging, pressing, or hammering

Definition statement

This place covers:

Details of forging hammers or presses, e.g. dies, die mountings, frames, guides, hammer tups, anvils, accessories for handling work or tools.

B21J 13/02

Dies or mountings therefor

Definition statement

This place covers:

Particular aspects of dies, e.g. die constructions, specific features.

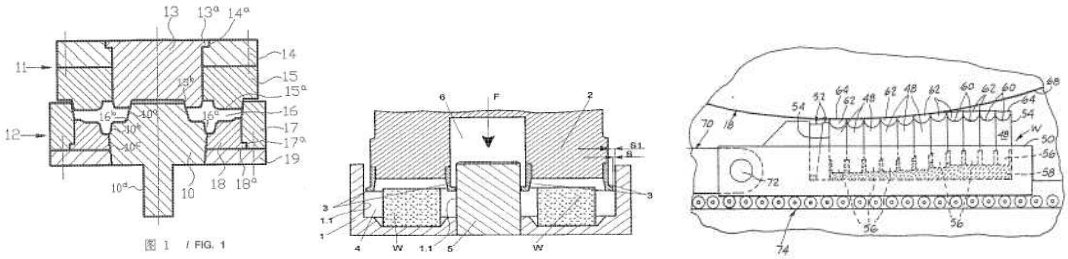

B21J 13/03

Die mountings

Definition statement

This place covers:

Details of die mountings

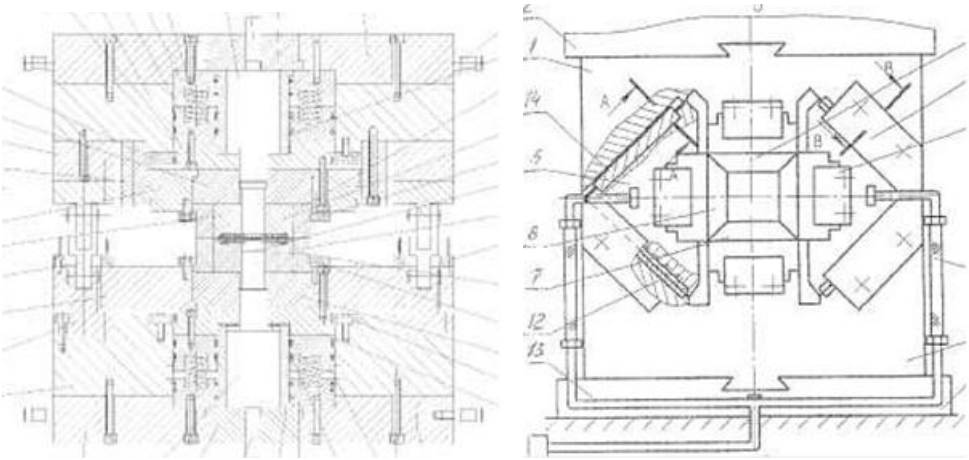

References

Informative references

Attention is drawn to the following places, which may be of interest for search:

Handling of tools	B21J 13/085

B21J 13/04

Frames; Guides

Definition statement

This place covers:

Details of frames of guides in forging machines.

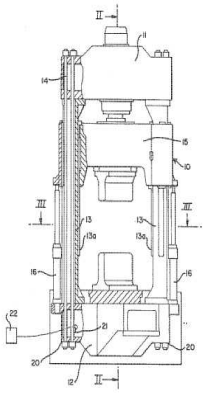

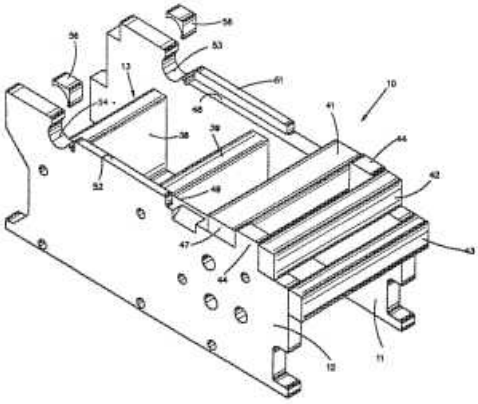

B21J 13/06

Hammers tups; Anvils; Anvil blocks

Definition statement

This place covers:

Details of hammer tups, anvils, anvil blocks.

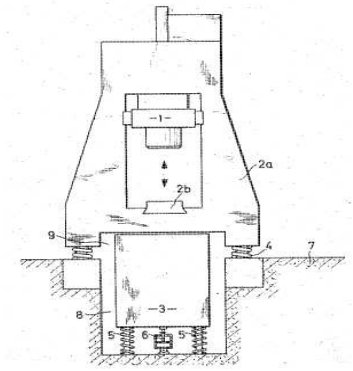

B21J 13/08

Accessories for handling work or tools

Definition statement

This place covers:

Details of the accessories for handling heavy workpieces, e.g. benches.

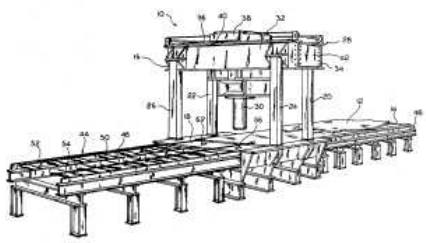

References

Informative references

Attention is drawn to the following places, which may be of interest for search:

Handling light workpieces in multi-stage presses	B21J 9/02
Handling light workpieces	B21K 27/00

B21J 13/085

{handling of tools}

Definition statement

This place covers:

Details of the accessories for handling tools.

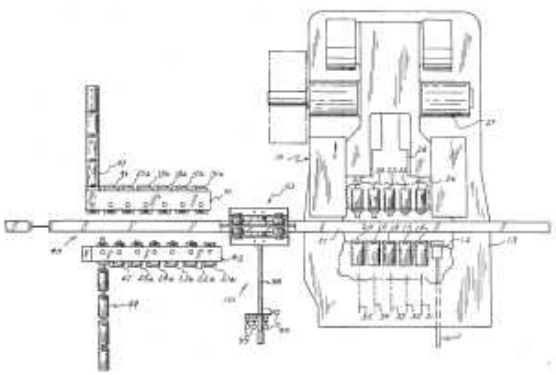

References

Limiting references

This place does not cover:

Die mountings	B21J 13/03

B21J 13/10

Manipulators (in general B25J)

Definition statement

This place covers:

Details of devices for manipulating heavy workpieces.

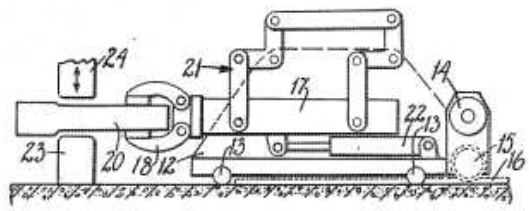

References

Informative references

Attention is drawn to the following places, which may be of interest for search:

Handling light workpieces in multi-stage presses	B21J 9/02
Handling light workpieces	B21K 27/00
Manipulators in general	B25J

B21J 13/12

Turning means

Definition statement

This place covers:

Devices adapted to turn heavy workpieces during forging.

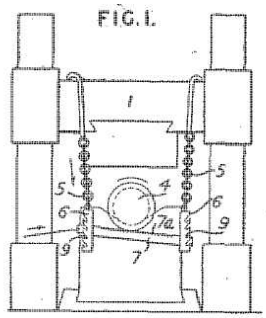

B21J 13/14

Ejecting devices

Definition statement

This place covers:

Devices for ejecting the workpieces from the forming die.

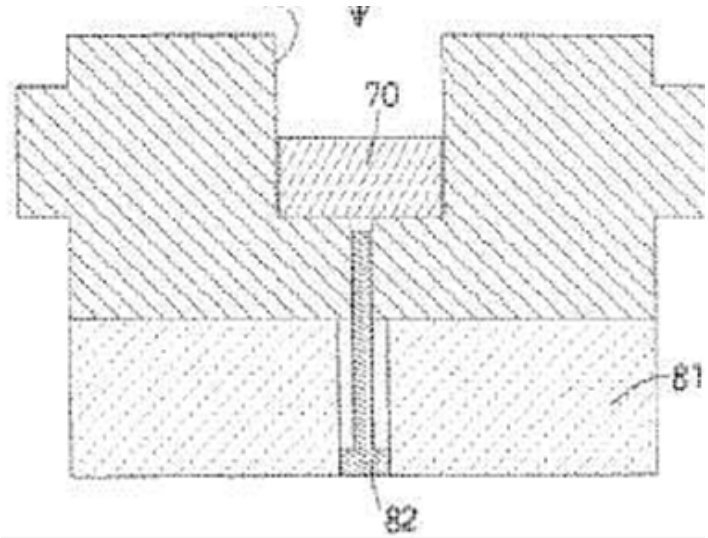

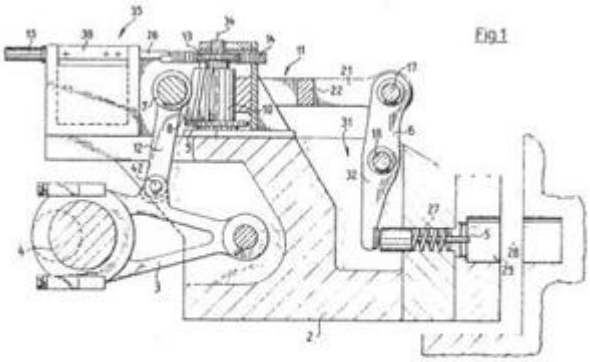

B21J 15/00

Riveting

Definition statement

This place covers:

All aspects of riveting. This group can be considered independent from the remaining of B21J. It is structured as follows:

Riveting methods	B21J 15/02 - B21J 15/08
Riveting machines	B21J 15/10 - B21J 15/365
Riveting accessories	B21J 15/38 - B21J 15/48
Removing rivets	B21J 15/50

A rivet is an element(1) specially(4) designed to connect two or more(2) workpieces under plastic deformation(3) of said element. See explanations of (1)-(4) in the glossary.

References

Limiting references

This place does not cover:

Chirurgical riveting	A61B 17/00
Plastic riveting	B29C 65/00

Informative references

Attention is drawn to the following places, which may be of interest for search:

Buttons	A41H 37/00
Sealing	B05C 17/00
Clinching workpieces	B21D 39/00
Feeding elements	B23P 19/00
Setting pierce-nuts	B23P 19/06
Setting screw-threaded nuts	B25B 27/00
Riveted connections	F16B 5/00
Adhesive	F16B 11/00
Rivets	F16B 19/04
Electrical elements	H01R 24/00, H05K 13/00

Glossary of terms

In this place, the following terms or expressions are used with the meaning indicated:

Element	Workpieces connected without use of an additional element are not riveted (e.g. a first metal sheet pressed into the hole of a second metal sheet is clinched, but not riveted, see picture). 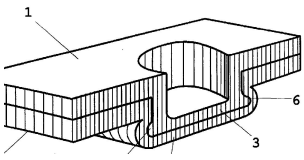
Connect two or more	Elements that do not connect two or more workpieces, but still are designed to be inserted into a single workpiece by deformation of said element are normally not considered as rivets (e.g. connecting nuts, see picture). 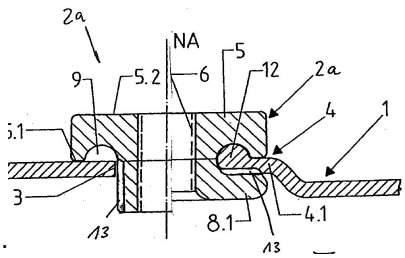
Plastic deformation of said element	An element that does not undergo plastic deformation is not a rivet (e.g. a screw, a nail do not deform).

Specially	Elements that usually have a different use (e.g. a tube, a gear) but still are used to connect two or more workpieces by the deformation of said element are usually not considered being rivets (such connections are usually in B21K 25/00 , see picture). 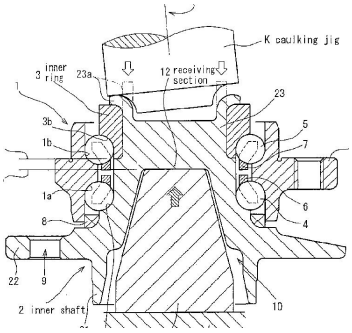

B21J 15/02

Riveting procedures

Definition statement

This place covers:

Riveting procedures. The procedure mainly depend on the type of rivet. So each group from B21J 15/02 - B21J 15/08 mainly correspond to a different type of rivet.

B21J 15/02 relates to setting the "standard" rivets, i.e. solid cylindrical piece of metal having or not a head at one end thereof. These rivets are riveted by applying axial pressure to form the end(s) having no head into a head.

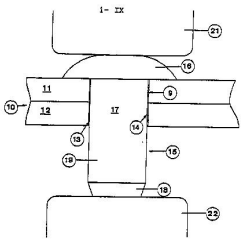

Fig. 1

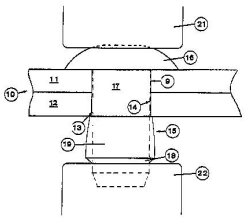

References

Informative references

Attention is drawn to the following places, which may be of interest for search:

Solid rivets per se	F16B 19/06

B21J 15/022

{Setting rivets by means of swaged-on locking collars, e.g. lockbolts}

Definition statement

This place covers:

Setting rivets of the "lock bolt" or "swaged on locking collar" type: the rivet is made of a stem / mandrel having grooves on the periphery, and having a head at one end. A ring is pressed from the opposite side, along the cylinder body into the grooves (see figure 1a before setting, figure 1b after setting).

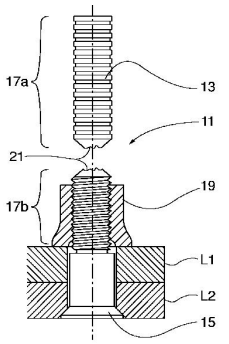

Fig. 1b

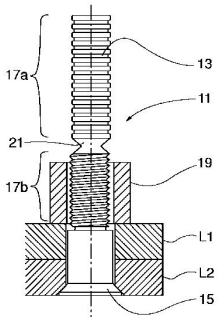

Fig. 1a

References

Informative references

Attention is drawn to the following places, which may be of interest for search:

Bolts fastened by swaged-on collars per se	F16B 19/05

B21J 15/025

{Setting self-piercing rivets}

Definition statement

This place covers:

Setting rivets of the "self-piercing" type: the workpieces to be joined have no hole drilled in advance. The rivet is punched by axial pressure into the workpieces, either partially or completely.

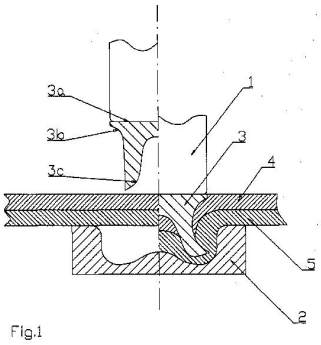

Fig.1

References

Informative references

Attention is drawn to the following places, which may be of interest for search:

Clinching	B21D 39/00
Setting pierce nuts	B23P 19/06
Self-piecing rivets per se	F16B 19/086

B21J 15/027

{Setting rivets by friction heating}

Definition statement

This place covers:

Setting rivets of the "friction heating" type: deformation of the rivet is obtained by pressing and turning a tool (or the rivet) to such a speed, that part of the rivet is heated above melting point.

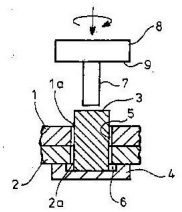

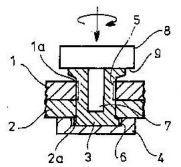

References

Informative references

Attention is drawn to the following places, which may be of interest for search:

Friction heat forging	B21J 5/063
Making connections by friction heat forging	B21K 25/005
Friction stir welding	B23K 20/12

B21J 15/04

Riveting hollow rivets mechanically

Definition statement

This place covers:

Setting hollow rivets, e.g. of the type where a first hollow semi rivet is inserted from a first side of the workpieces into a second hollow semi rivet inserted into the workpieces from the opposite side.

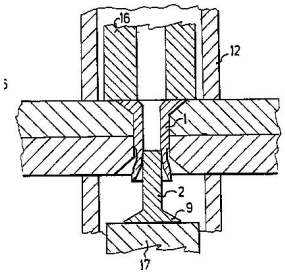

References

Informative references

Attention is drawn to the following places, which may be of interest for search:

Hollow rivets, multi-parts rivets per se	F16B 19/08

B21J 15/041

{by pushing a drive-pin}

Definition statement

This place covers:

Setting hollow rivets of the type where a mandrel is pushed into a rivet in order to expand said rivet.

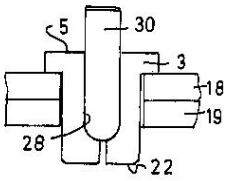

FIG. 6

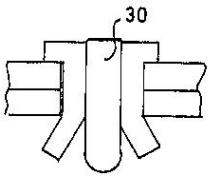

FIG. 7

References

Informative references

Attention is drawn to the following places, which may be of interest for search:

Blind rivets fastened by a drive-pin	F16B 19/1081

B21J 15/043

{by pulling a mandrel}

Definition statement

This place covers:

Setting rivets by pulling a (usually breakable) mandrel, which deforms the head of the rivet (and usually breaks, see e.g. pop rivets). If the mandrel belongs to the machine, and can be screwed / unscrewed inside the rivet head, then these rivets belong to B25B 27/00: screw-threaded nuts.

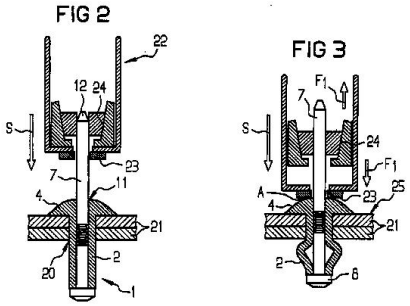

References

Informative references

Attention is drawn to the following places, which may be of interest for search:

Hand tools for setting screw threaded nuts	B25B 27/00
Hollow rivets fastened by a pull-mandrel per se	F16B 19/1045

B21J 15/045

{and swaging locking means, i.e. locking the broken off mandrel head to the hollow rivet}

Definition statement

This place covers:

Setting rivets using swaged locking means, usually an additional ring, or an additional part of the mandrel is expanded into the rivet body (see ring 11 in the attached figure).

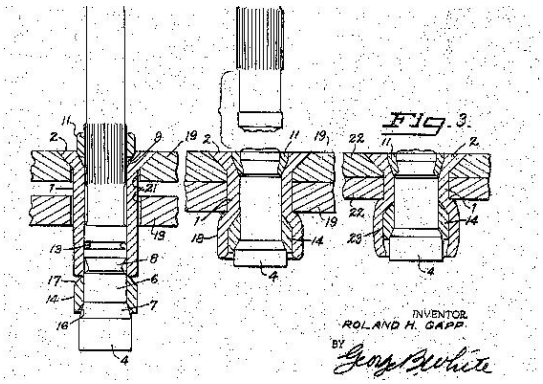

B21J 15/046

{by edge-curling}

Definition statement

This place covers:

Setting rivets by "edge curling": the rivet is hollow, like a small tube, and the ends of the rivets are rolled backwards. An alternative is a hollow rivet having an end closed, said end being expanded by means of a hook.

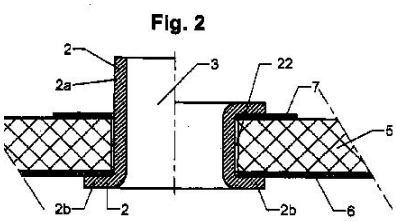

B21J 15/048

{Setting self-drilling hollow rivets}

Definition statement

This place covers:

Setting of "self-drilling" rivets: the rivet is provided with a small drilling head, and is rotated to drill the hole it should be inserted into.

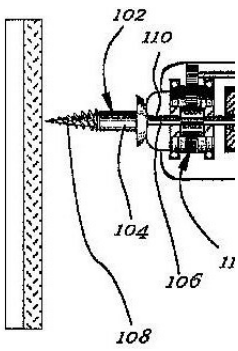

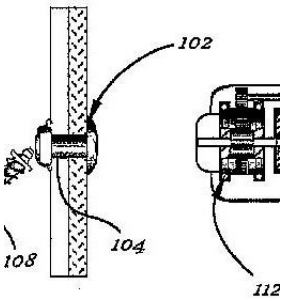

References

Informative references

Attention is drawn to the following places, which may be of interest for search:

Self-drilling rivets per se	F16B 19/083

B21J 15/06

Riveting hollow rivets by means of hydraulic, liquid, or gas pressure {(portable riveters B21J 15/105)}

Definition statement

This place covers:

Setting rivets, wherein a fluid pressure, e.g. hydraulic, liquid or gas, is fed directly inside the rivet in order to deform it.

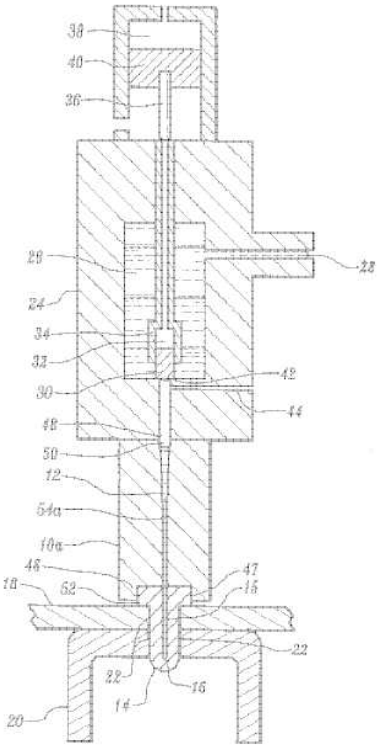

B21J 15/08

Riveting by applying heat {, e.g.} to the end parts of the rivets to enable heads to be formed {(B21J 15/027 takes precedence)}

Definition statement

This place covers:

Applying additional heat to the rivet or to the workpiece.

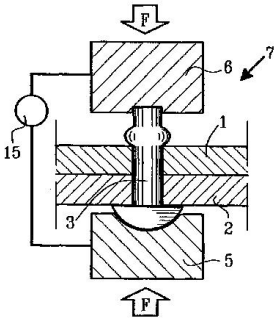

References

Informative references

Attention is drawn to the following places, which may be of interest for search:

Setting rivets by friction heating	B21J 15/027
Electrical heating	H05B

B21J 15/10

Riveting machines (electric heating elements H05B)

Definition statement

This place covers:

All aspects relating to riveting machines.

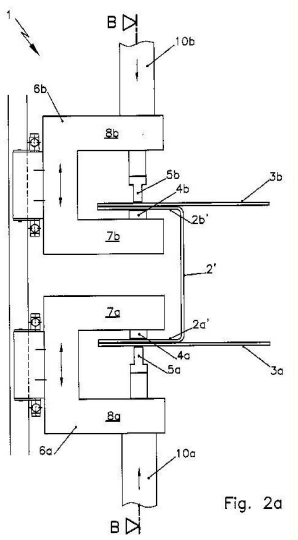

Fig. 2a

References

Informative references

Attention is drawn to the following places, which may be of interest for search:

Machines for setting pierce nuts	B23P 19/04
Machines in general	B23Q

B21J 15/105

{Portable riveters (pliers for riveting B21J 15/386)}

Definition statement

This place covers:

Riveting hand tools operated by hydraulic, liquid, gas, or electricity, i.e. any force which is not the force of the hand.

FIG.2

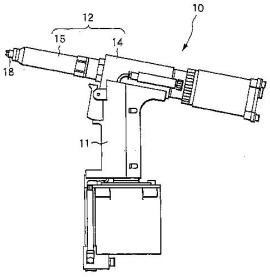

References

Limiting references

This place does not cover:

Pliers, i.e. riveting tools actuated by the force of the hand	B21J 15/386

Informative references

Attention is drawn to the following places, which may be of interest for search:

Screw threaded nuts setting machines	B25B 27/00

B21J 15/12

with tools or tool parts having a movement additional to the feed movement, e.g. spin {(B21J 15/027 takes precedence)}

Definition statement

This place covers:

Machines having an additional movement to the feed movement, e.g., vibration, rotation (wobble die).

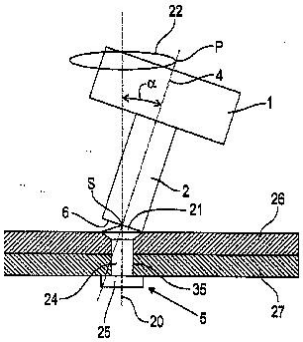

References

Limiting references

This place does not cover:

Setting rivets by friction heating	B21J 15/027
Setting self-drilling rivets	B21J 15/048

Informative references

Attention is drawn to the following places, which may be of interest for search:

Forging presses with wobbling dies	B21J 9/025

B21J 15/14

specially adapted for riveting specific articles, e.g. brake lining machines

Definition statement

This place covers:

Machines for manufacturing brake lining machines, turbines, riveting into composite, and everything relating to aerospace construction (usually machines having specific frames for airplanes or associated with a drilling tool). The picture represents typical brake lining.

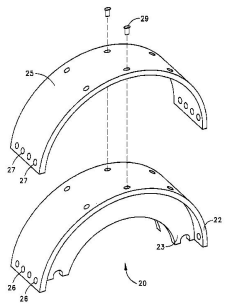

References

Informative references

Attention is drawn to the following places, which may be of interest for search:

Aeroplanes, helicopters	B64C
Ground or aircraft-carrier deck installations	B64F

B21J 15/142

{Aerospace structures}

Definition statement

This place covers:

Machines for manufacturing aerospace structures, mainly either machines having a working head with multiple tools (e.g. driller, riveter, sealer) or machines designed to work on large structures (e.g. riveting an airplane ring or airplane section).

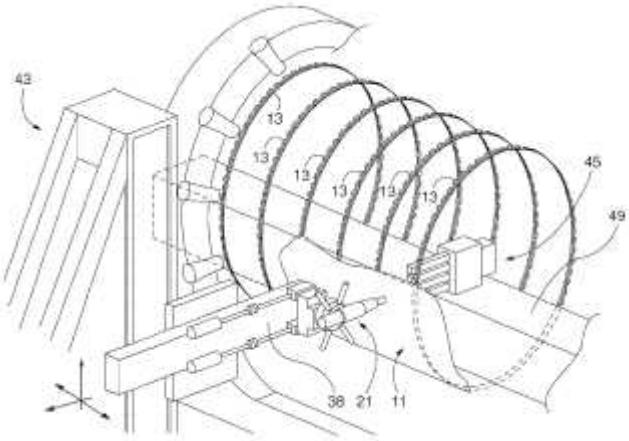

Fig. 4

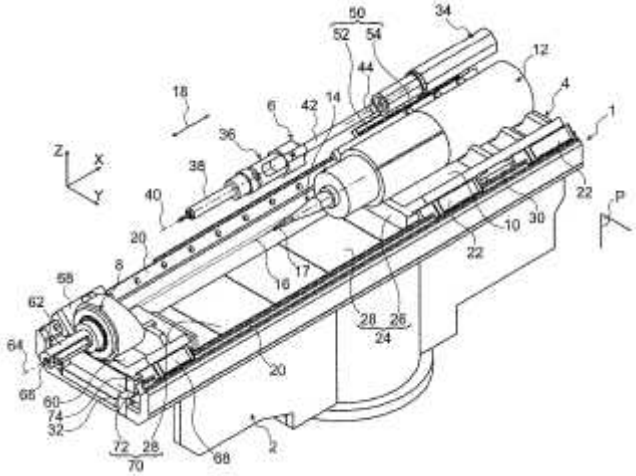

Source: EP1884313; US2011119897

References

Informative references

Attention is drawn to the following places, which may be of interest for search:

Frames, beds, pillars of machine tools	B23Q 1/00
Assembling or manufacturing aircrafts	B64F 5/10

B21J 15/145

{Turbines}

Definition statement

This place covers:

Machines for manufacturing turbines.

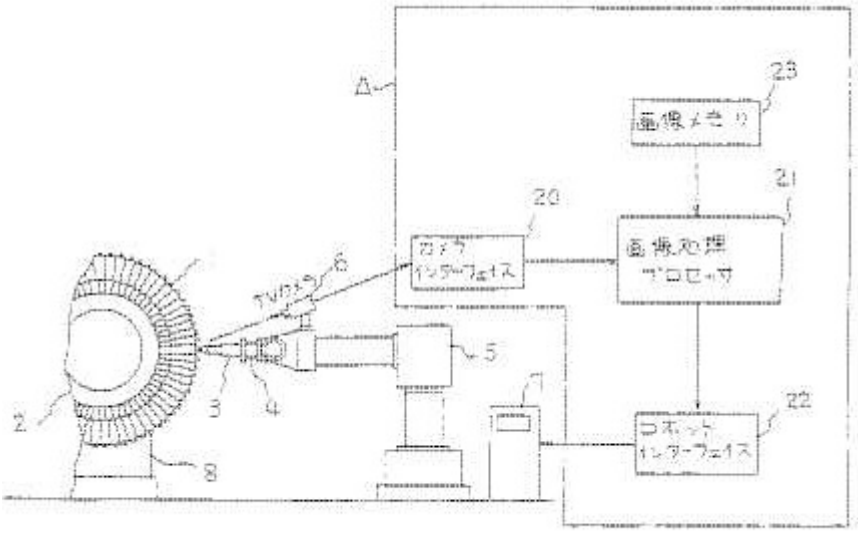

Source: JP61189837

B21J 15/147

{Composite articles}

Definition statement

This place covers:

Machines for riveting composite articles.

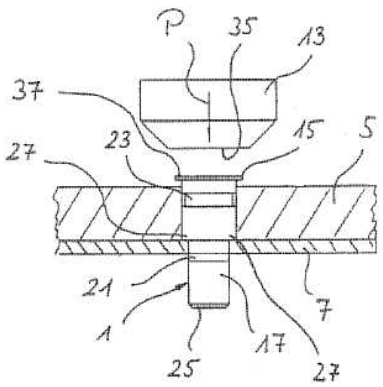

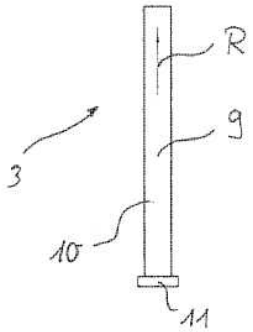

Source: DE102009037245

References

Informative references

Attention is drawn to the following places, which may be of interest for search:

General aspects of joining of plastics	B29C 66/00

B21J 15/16

Drives for riveting machines; Transmission means therefor

Definition statement

This place covers:

Motors being used as drives for riveting and transmissions therefore, e.g. in machines working with chains or belts.

B21J 15/18

operated by air pressure or other gas pressure, e.g. explosion pressure

Definition statement

This place covers:

Air or gas motors for riveting machines.

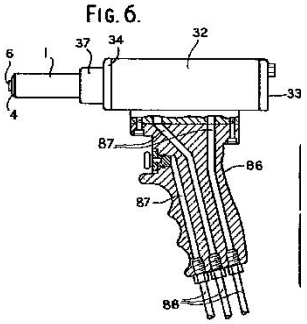

References

Informative references

Attention is drawn to the following places, which may be of interest for search:

Drives operated by gas and hydraulic or liquid pressure	B21J 15/22

B21J 15/185

{by explosion pressure}

Definition statement

This place covers:

Riveting by explosion.

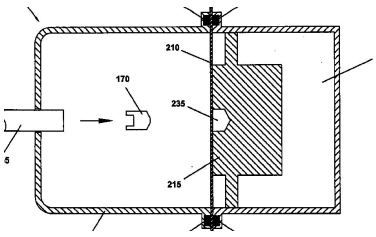

B21J 15/20

operated by hydraulic or liquid pressure

Definition statement

This place covers:

Drives for riveting using hydraulic or liquid pressure.

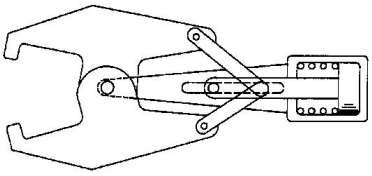

B21J 15/205

{Riveting tools having hand operated pumps for building up the hydraulic pressure}

Definition statement

This place covers:

Drives for riveting where the pressure comes from a hand operated pump.

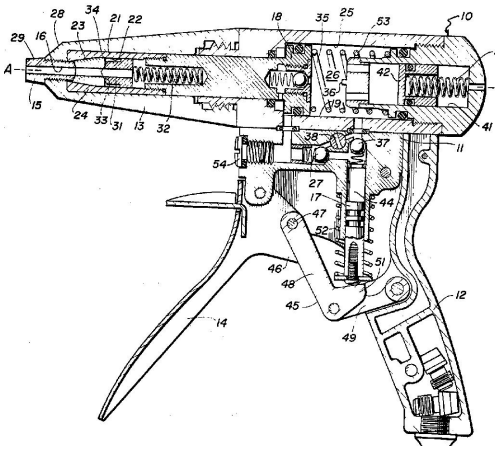

B21J 15/22

operated by both hydraulic or liquid pressure and gas pressure

Definition statement

This place covers:

Drives for riveting combining air (or gas) and hydraulic (or liquid) pressure, usually by means of an intensifier. This combination is common in riveting hand tools, where a piston actuated by a primary pressurised air circuit (coming from pipes in the factory) is used to build pressure into a hydraulic

circuit of the riveting tool, which serves to deform the rivet. The following figure discloses such an intensifier 22, 25, 26.

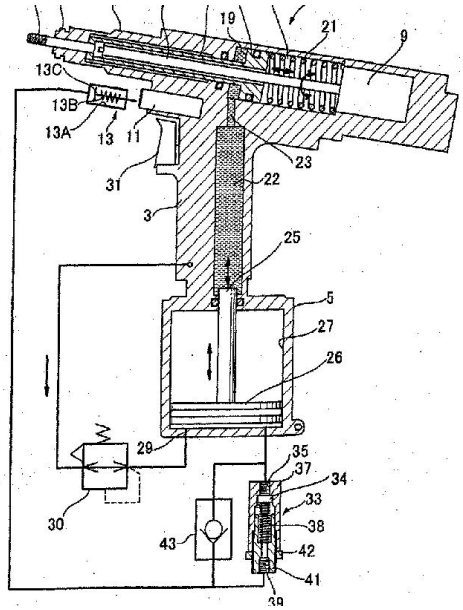

References

Informative references

Attention is drawn to the following places, which may be of interest for search:

Drives operated by gas and hydraulic or liquid pressure	B21J 15/18
Drives operated by hydraulic or liquid pressure	B21J 15/20

B21J 15/24

operated by electro-magnets

Definition statement

This place covers:

Drives for riveting using electromagnets (e.g. a capacitor is suddenly discharged into an electromagnet to create a sudden repulsion force of a permanent magnet). Electric actuators not belonging to B21J 15/26.

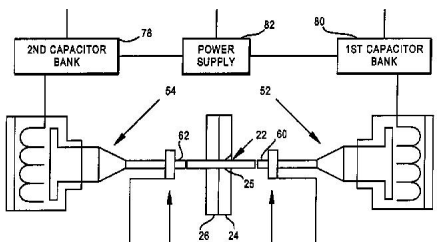

References

Limiting references

This place does not cover:

Drives for riveting using an electric motor	B21J 15/26

B21J 15/26

operated by rotary drive, e.g. by electric motor

Definition statement

This place covers:

Drives for riveters using an electric motor.

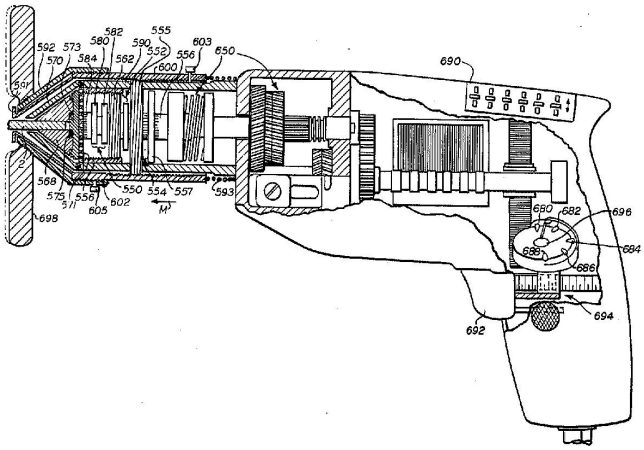

B21J 15/28

Control devices specially adapted to riveting machines not restricted to one of the preceding subgroups

Definition statement

This place covers:

Control devices, which are understood to be any device influencing the sequence of operation of the machine in addition to basic machine movement command. As example, control includes checking positioning of the rivet or the workipece, checking the operator's security.

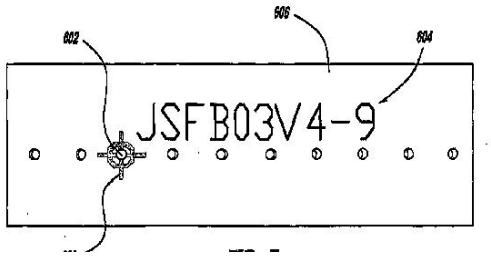

B21J 15/285

{for controlling the rivet upset cycle}

Definition statement

This place covers:

Controls the rivet deformation parameters during setting, e.g. force vs. time, strain vs. time...

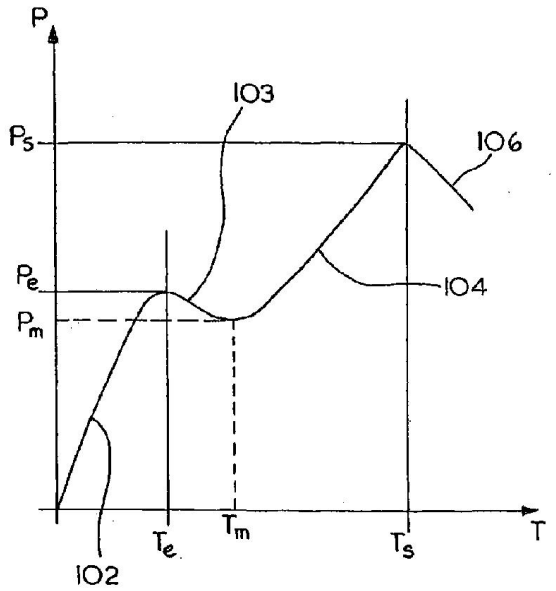

B21J 15/32

Devices for inserting or holding rivets in position with or without feeding arrangements

Definition statement

This place covers:

Devices for feeding rivets, anywhere from the storage bowl to the riveting head.

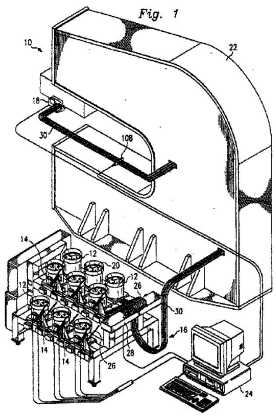

References

Informative references

Attention is drawn to the following places, which may be of interest for search:

Feeding welding pins	B23K 9/20
Feeding articles for assembling machines	B23P 19/00
Magazines for machine tools	B23Q 7/10
Feeding screws	B25B 23/04
Articles attached to webs	B65D 73/02
Conveying articles through pipes	B65G 51/02
Nails or staples formed in integral series	F16B 15/08
Devices for fastening nails, bolds or nuts	F16B 27/00

B21J 15/323

{using a carrier strip}

Definition statement

This place covers:

Devices for feeding rivets, attached to a carrier strip.

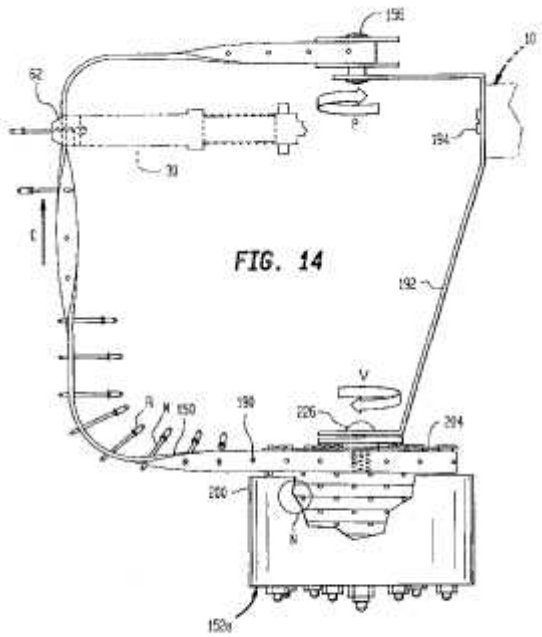

Source: EP0928650

B21J 15/326

{Broken-off mandrel collection}

Definition statement

This place covers:

Devices for collecting broken-off mandrels or stems.

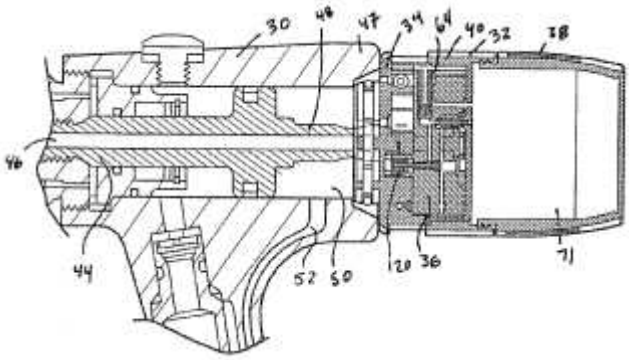

Source: WO2004048011

B21J 15/34

for installing {multiple-type} tubular rivets

Definition statement

This place covers:

Feeding tubular rivets of the multiple rivet type.

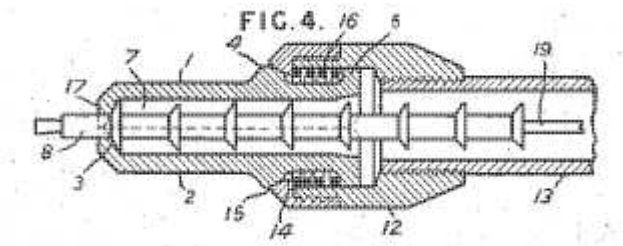

Source: GB642664

B21J 15/36

Rivet sets, i.e. tools for forming heads; Mandrels for expanding parts of hollow rivets

Definition statement

This place covers:

Details of die forming heads or rivet forming parts.

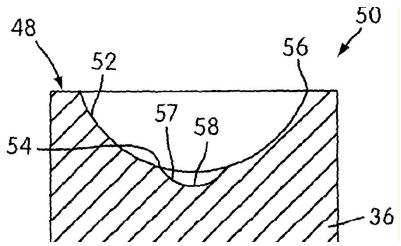

B21J 15/365

{Mandrels for expanding parts of hollow rivets}

Definition statement

This place covers:

Details of mandrels for forming hollow rivets.

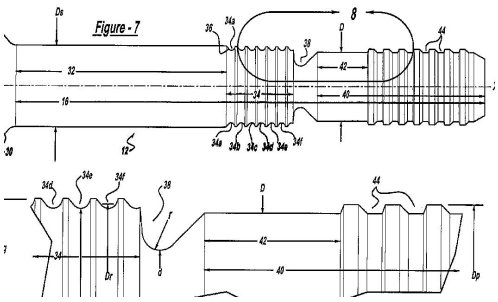

References

Informative references

Attention is drawn to the following places, which may be of interest for search:

Setting rivets by means of a mandrel	B21J 15/043
Hollow rivets fastened by a pull mandrel	F16B 19/1045

B21J 15/38

Accessories for use in connection with riveting, e.g. pliers for upsetting; Hand tools for riveting

Definition statement

This place covers:

Accessories in connection to riveting. Hand actuated tools and rivet removing equipments are considered accessories.

B21J 15/383

{Hand tools for riveting}

Definition statement

This place covers:

Hand tools used for or in connection with riveting, which are actuated without energy supply: the force comes from the hand.

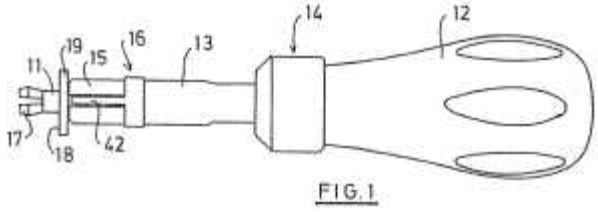

Source: EP0447901

References

Limiting references

This place does not cover:

Portable riveters	B21J 15/105
Pliers for riveting	B21J 15/386

B21J 15/386

{Pliers for riveting}

Definition statement

This place covers:

Pliers for riveting, i.e. actuated without energy supply: the force comes from the hand.

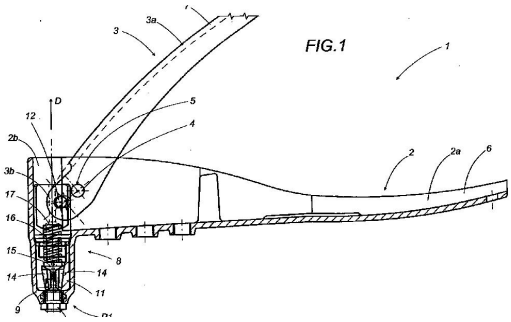

References

Limiting references

This place does not cover:

Portable riveters	B21J 15/105

B21J 15/40

for forming rivet heads

Definition statement

This place covers:

Accessories for forming rivet heads.

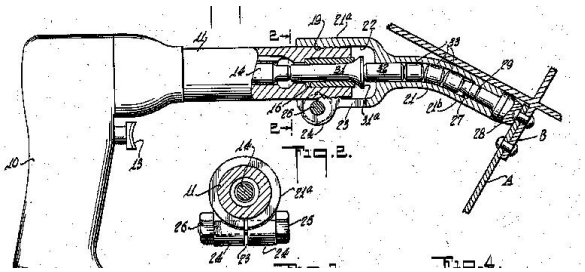

B21J 15/42

Special clamping devices for workpieces to be riveted together, e.g. operating through the rivet holes

Definition statement

This place covers:

Special clamping devices: specific tools to press the workpieces one against the other before riveting.

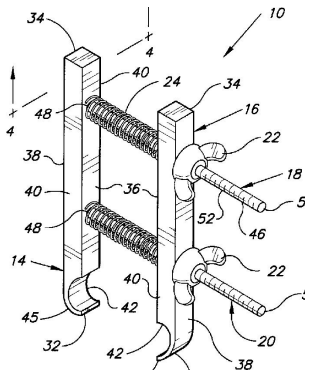

References

Limiting references

This place does not cover:

Pressing device integrated into the riveting tool	B21J 15/10, B21J 15/14

B21J 15/44

Rivet hole positioners

Definition statement

This place covers:

Riveting holes positionners to position the tool with regard to the hole.

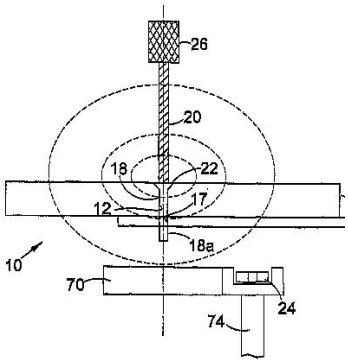

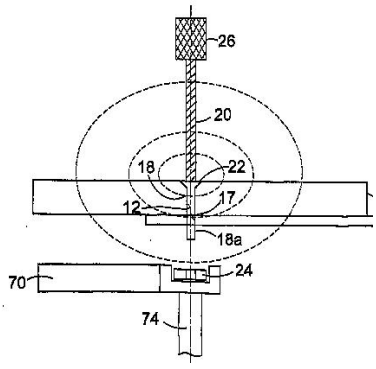

B21J 15/46

Positioners for rivets for making tube joints

Definition statement

This place covers:

Positionners for rivets when making tube joints.

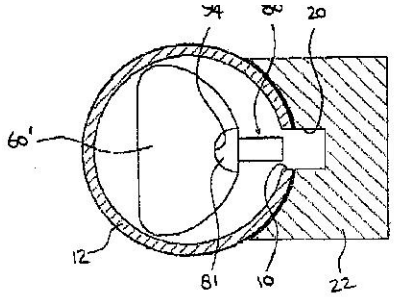

B21J 15/48

Devices for caulking rivets

Definition statement

This place covers:

Devices for caulking rivets, i.e. re-working the rivet head after setting, to change the shape, or push the button sides into the workpieces.

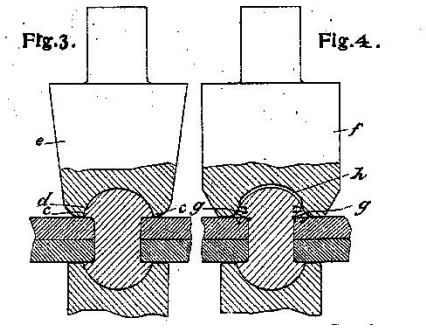

B21J 15/50

Removing or cutting devices for rivets

Definition statement

This place covers:

Removing rivets which are installed and need to be removed, e.g. by cutting, shaving or drilling

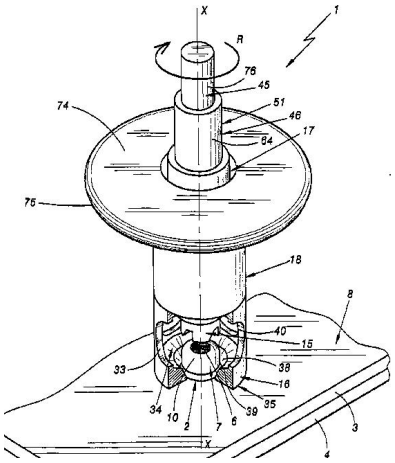

References

Limiting references

This place does not cover:

Jigs for drilling rivets	B23B 47/284
Removing sleeves	B25B 27/06
Hand cutting tools	**B26D17/00**

B21J 17/00

Forge furnaces (furnaces for heat treatment C21D 9/00; furnaces in general F27)

Definition statement

This place covers:

Details of the furnaces specifically adapted for forging

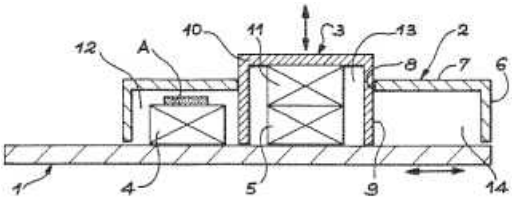

References

Informative references

Attention is drawn to the following places, which may be of interest for search:

Heating or cooling methods	B21J 3/00
Furnaces for heat treatment of ferrous or non-ferrous metals or alloys	B21K 29/00
Furnaces for heat treatment	C21D 9/00

B21J 17/02

electrically heated (electric heating elements H05B)

Definition statement

This place covers:

Details of the electrically heated furnaces specifically adapted for forging

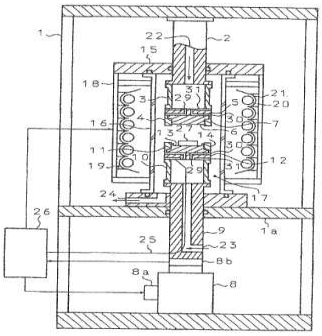

References

Informative references

Attention is drawn to the following places, which may be of interest for search:

Electric heating elements	H05B

B21J 19/00

Blacksmiths requisites not otherwise provided for

Definition statement

This place covers:

Blacksmiths requisites, i.e. requisites for hand forging

B21J 19/02

Hearths; Air supply arrangements specially adapted therefor

Definition statement

This place covers:

Hearths; Air supply arrangements specially adapted therefor

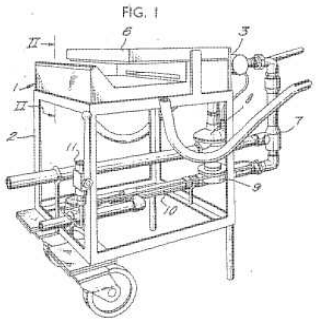

B21J 19/025

{Tyre heaters}

Definition statement

This place covers:

Tyre heaters, e.g. for heating train wheels.

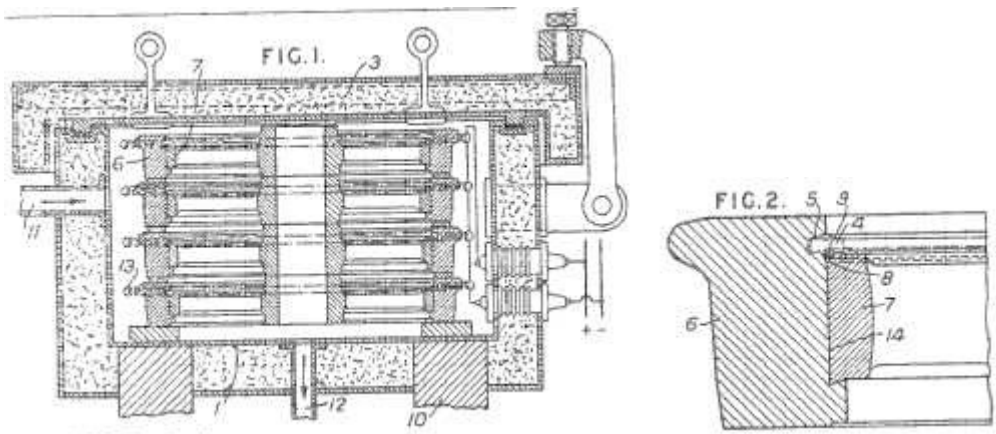

B21J 19/04

Anvils; Associated items

Definition statement

This place covers:
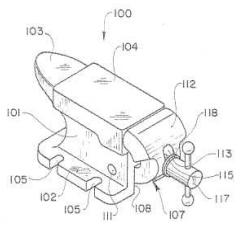
Anvils and associated items