B07B

SEPERATING SOLIDS FROM SOLIDS BY SIEVING, SCREENING, OR SIFTING OR BY USING GAS CURRENTS; OTHER SEPARATING BY DRY METHODS APPLICABLE TO BULK MATERIAL, e.g. LOOSE ARTICLES FIT TO BE HANDLED LIKE BULK MATERIAL (combinations of dry separating apparatus with wet separating apparatus B03B; hand sorting, postal sorting, sorting by switching or other devices actuated in response to detection or measurement of some feature of articles or samples of material B07C)

Definition statement

This place covers:

Apparatus or methods for the separation of solids from solids that include:

- Any sorting or grading of bulk material or loose articles fit to be handled like bulk material which results automatically from the construction of the apparatus and properties of the material or articles, e.g. by a trap opening under an object of a certain minimum weight, by an aperture of graduated size.
- Sorting of articles in so far as the same conditions apply, e.g. sorting of timber by passing it over successively longer openings; the articles may or may not be orientated for the purpose of sorting.
- Sieving, screening, sifting or sorting solid materials using networks, gratings, grids or the like.
- Separating solids from solids that are initially a mixture using apparatus or methods that subject the mixture to a gas current, dispenses the mixture within a gas, carries the mixture on a gas current while it is being separated, or uses a gas current on it to cause separation, including combinations of disparate types of apparatus utilizing gas currents in the separation of solids from solids.
- Other types of apparatus for directly controlled dry method grading or sorting of solid materials in a bulk form or of loose articles that are being handled like solid type bulk material, e.g. grading according to size or weight or using momentum effects.
- Constructional features of screens per se, or screens and their driving mechanisms, which are used in dry or wet separating methods.
- Combinations of disparate types of apparatus or methods for separating solids from solids that applicable to bulk material or to loose articles fit to be handled like bulk material.
- Accessories that are specially adapted for, or arranged in conjunction with, the above types of separating, sorting or grading of bulk material or articles.

B07B 1/005

{Transportable screening plants}

Definition statement

This place covers:

Illustrative example of subject matter classified in this group:

WO-A1-96/25245

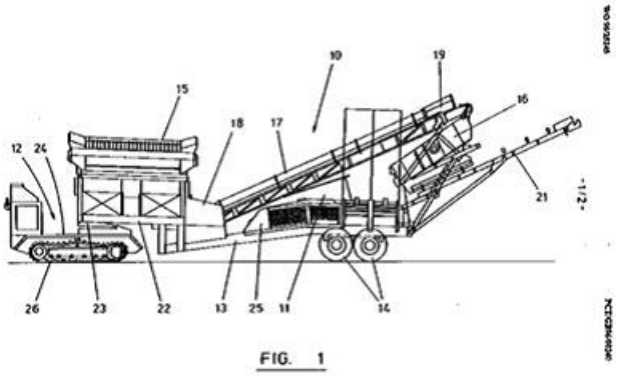

B07B 1/02

Hand screens

Definition statement

This place covers:

Illustrative example of subject matter classified in this group:

LU-A2-91105

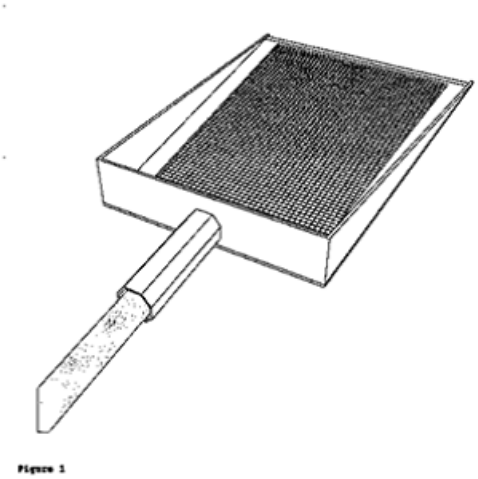

B07B 1/04

Stationary flat screens

Definition statement

This place covers:

Illustrative example of subject matter classified in this group:

US-A1-2003/0080031

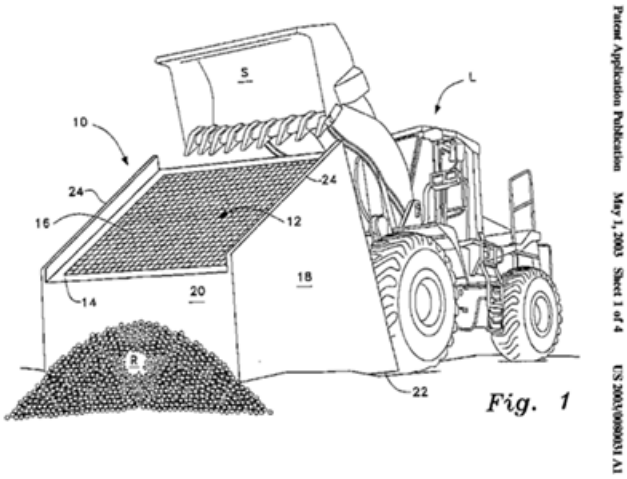

B07B 1/06

Cone or disc shaped screens

Definition statement

This place covers:

Illustrative example of subject matter classified in this group:

GB-A-2307428

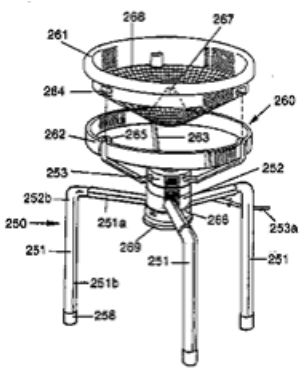

B07B 1/08

Screens rotating within their own plate

Definition statement

This place covers:

Illustrative example of subject matter classified in this group:

EP-A1-0411803

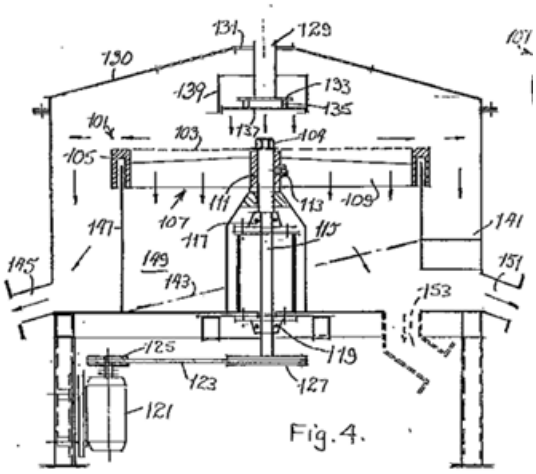

Fig.4.

B07B 1/10

Screens in the form of endless moving bands

Definition statement

This place covers:

Illustrative example of subject matter classified in this group:

US-A-5887729

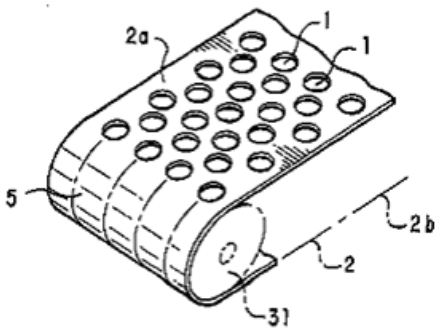

FIG. 1B

B07B 1/12

Apparatus having only parallel elements

Definition statement

This place covers:

Illustrative example of subject matter classified in this group:

US-B1-7861867

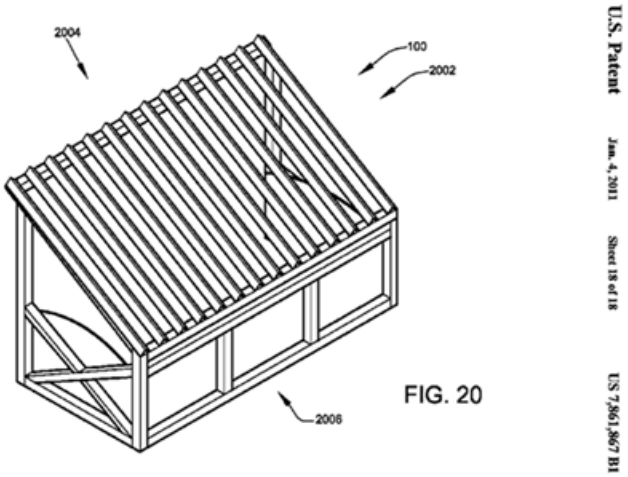

FIG. 20

B07B 1/14

Roller screens

Definition statement

This place covers:

Illustrative example of subject matter classified in this group:

US-B1-7117996

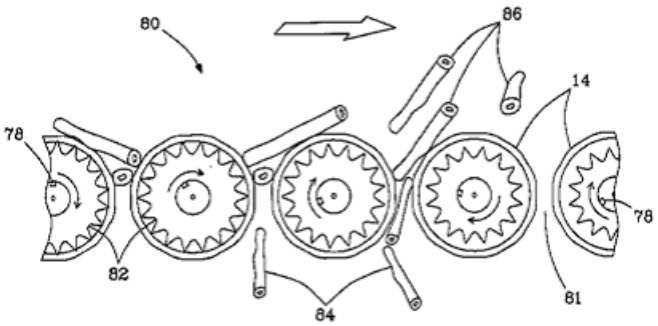

B07B 1/15

using corrugated, grooved or ribbed rollers

Definition statement

This place covers:

Illustrative example of subject matter classified in this group:

EP-A1-2248602

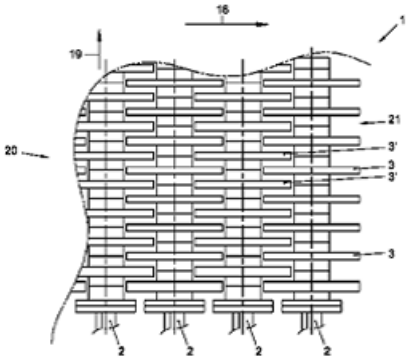

B07B 1/16

the elements being movable and in other than roller form

Definition statement

This place covers:

Illustrative example of subject matter classified in this group:

US3971716 A

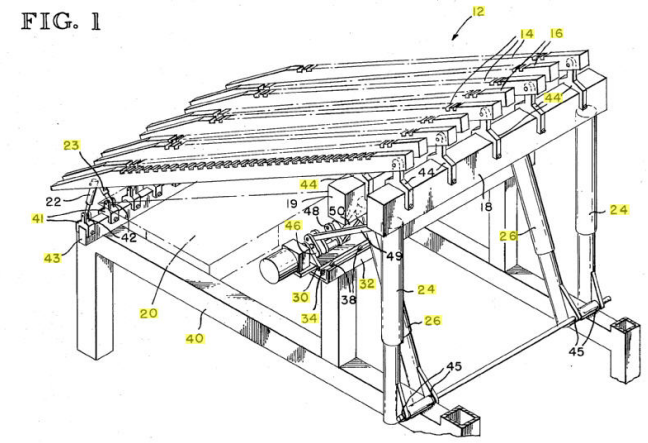

GB326834 A

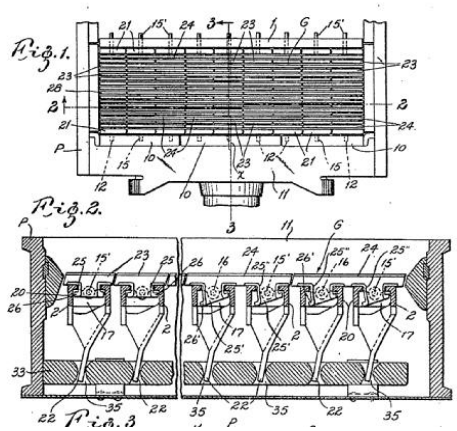

US5392931 A

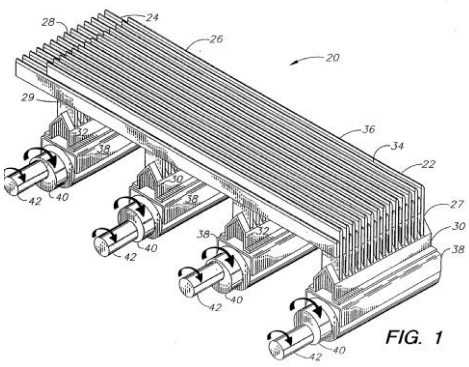

B07B 1/20

Stationary drums with moving interior agitators

Definition statement

This place covers:

Illustrative example of subject matter classified in this group:

FR-A-2686273

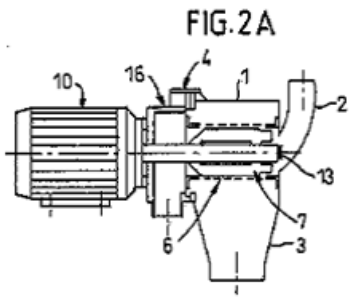

B07B 1/22

Revolving drums

Definition statement

This place covers:

Illustrative example of subject matter classified in this group:

GB-A-536054

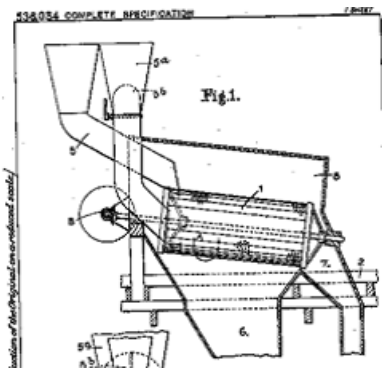

B07B 1/24

with fixed or moving interior agitators

Definition statement

This place covers:

Illustrative example of subject matter classified in this group:

FR-A-2568492

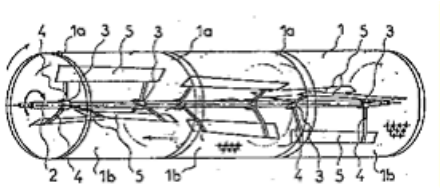

B07B 1/26

with additional axial or radial movement of the drum

Definition statement

This place covers:

Illustrative example of subject matter classified in this group:

WO-A1-84/04473

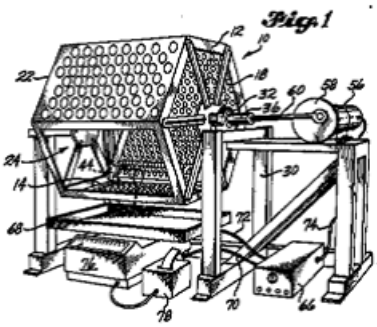

B07B 1/282

{their jigging movement being a closed or open curvilinear path in a plane perpendicular to the plane of the screen and parrallel or transverse to the direction of conveyance}

Definition statement

This place covers:

Illustrative example of subject matter classified in this group:

US-A-2258789

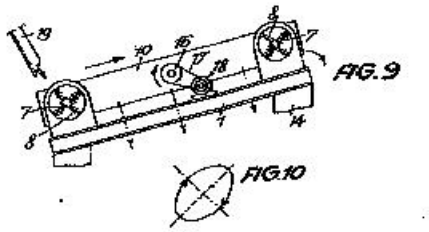

B07B 1/284

{with unbalanced weights}

Definition statement

This place covers:

Illustrative example of subject matter classified in this group:

DE-B-1176979

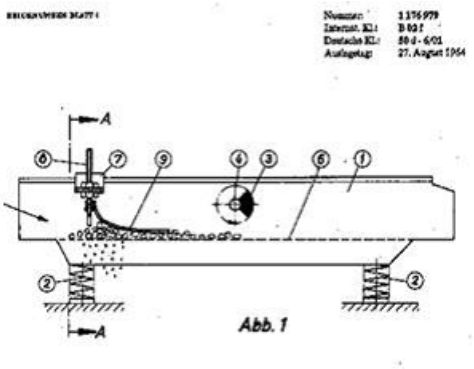

B07B 1/286

{with excentric shafts}

Definition statement

This place covers:

Illustrative example of subject matter classified in this group:

DE-C-948574

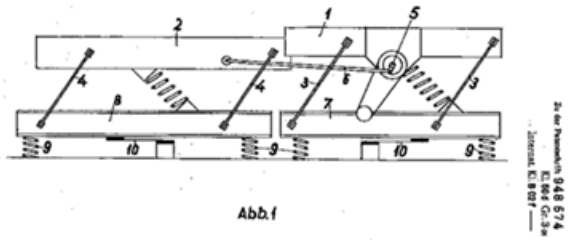

B07B 1/30

jigging or moving to-and-fro {within their own plane} in or approximately in {or transverse to} the direction of conveyance

Definition statement

This place covers:

Illustrative example of subject matter classified in this group:

DE-A1-4039934

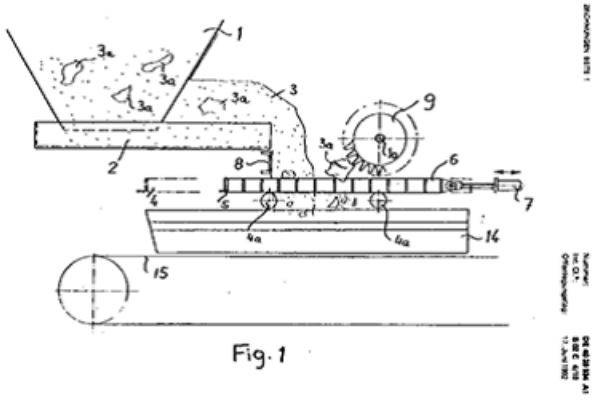

B07B 1/34

jigging or moving to-and-fro perpendicularly or approximately perpendicular to the plane of the screen

Definition statement

This place covers:

Illustrative example of subject matter classified in this group:

EP-A2-0212378

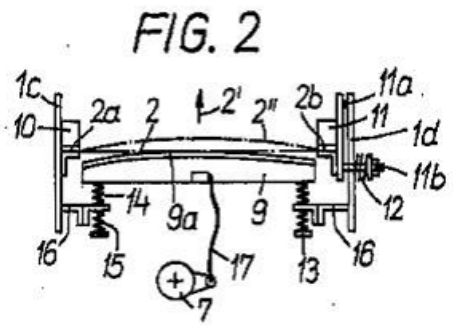

B07B 1/343

{with mechanical drive elements other than electromagnets}

Definition statement

This place covers:

Illustrative example of subject matter classified in this group:

US-E-RE16701

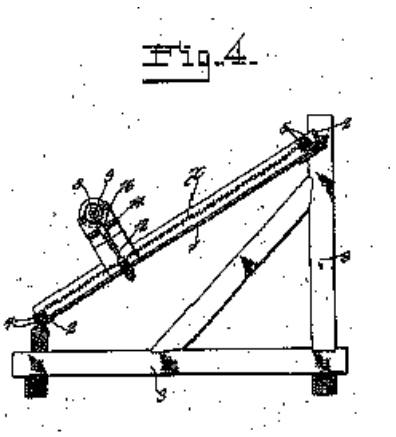

B07B 1/346

{with electromagnets}

Definition statement

This place covers:

Illustrative example of subject matter classified in this group:

DE-A1-2120244

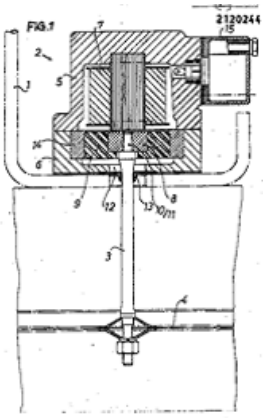

B07B 1/36

jigging or moving to-and-fro in more than one direction

Definition statement

This place covers:

Illustrative example of subject matter classified in this group:

WO-A1-03/024626

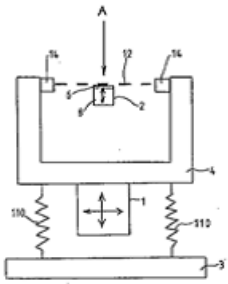

B07B 1/38

oscillating in a circular arc in their own plane; plansifters

Definition statement

This place covers:

Illustrative example of subject matter classified in this group:

DE-C-74002

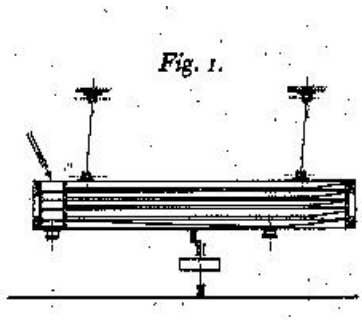

B07B 1/40

Resonant vibration screens

Definition statement

This place covers:

Illustrative example of subject matter classified in this group:

DE-C1-10054089

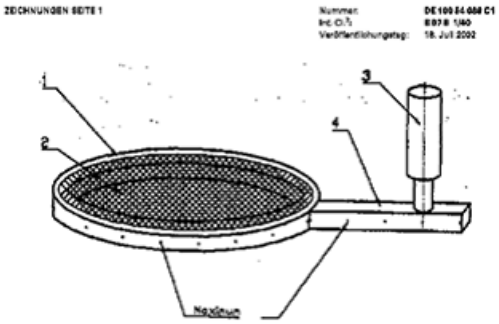

B07B 1/42

Drive mechanisms, regulating or controlling devices, or balancing devices, specially adapted for screens

Definition statement

This place covers:

Illustrative example of subject matter classified in this group:

GB-A-2123520

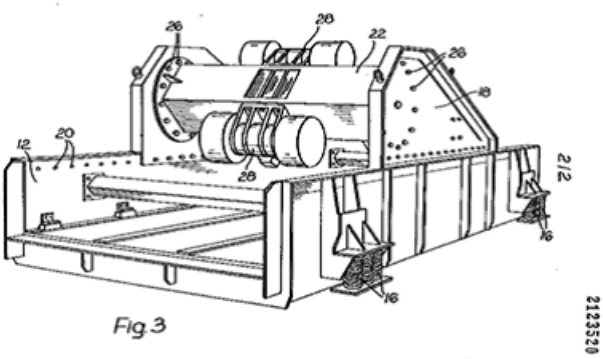

B07B 1/44

Balancing devices

Definition statement

This place covers:

Illustrative example of subject matter classified in this group:

DE-C-641512

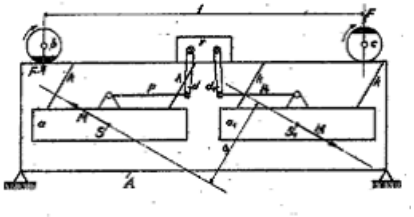

B07B 1/4609

{constructional details of screening surfaces or meshes}

Definition statement

This place covers:

Illustrative example of subject matter classified in this group:

DE-B-1022448

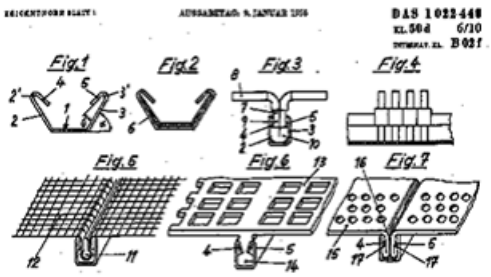

B07B 1/4618

{Manufacturing of screening surfaces}

Definition statement

This place covers:

Illustrative example of subject matter classified in this group:

US-A-4396503

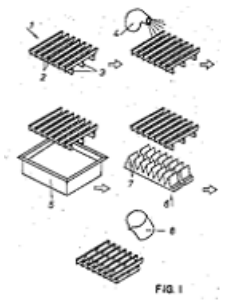

B07B 1/4627

{Repairing of screening surfaces}

Definition statement

This place covers:

Illustrative example of subject matter classified in this group:

WO-A-92/00133

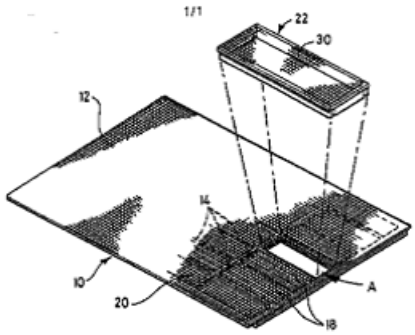

B07B 1/4636

{Regulation of screen apertures}

Definition statement

This place covers:

Illustrative example of subject matter classified in this group:

FR-A-1140961

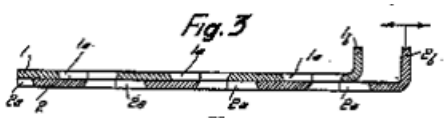

B07B 1/4645

{Screening surfaces built up of modular elements}

Definition statement

This place covers:

Illustrative example of subject matter classified in this group:

WO-A1-03/066243

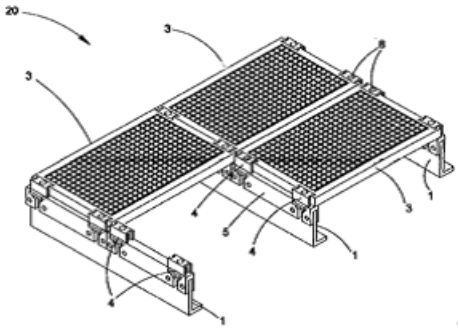

B07B 1/4654

{Corrugated Screening surfaces}

Definition statement

This place covers:

Illustrative example of subject matter classified in this group:

US-B1-6340089

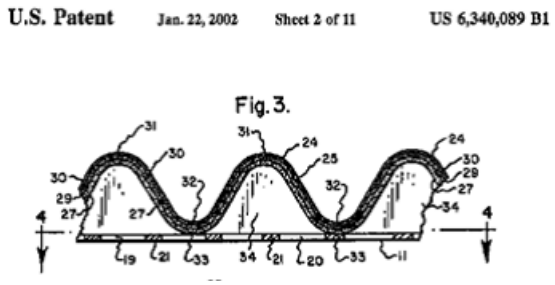

B07B 1/4663

{Multi-layer screening surfaces}

Definition statement

This place covers:

Illustrative example of subject matter classified in this group:

US-A1-2004/0102117

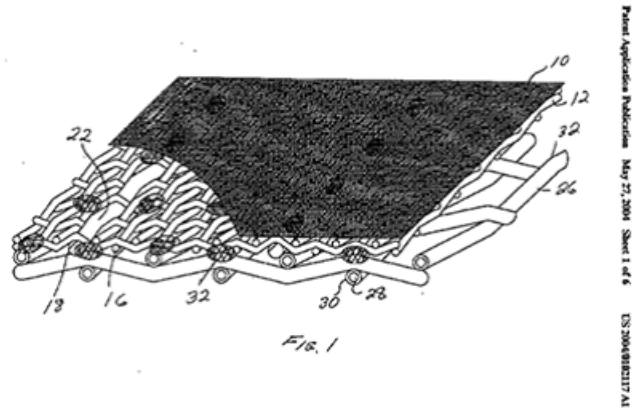

B07B 1/4672

{Woven mesches}

Definition statement

This place covers:

Illustrative example of subject matter classified in this group:

DE-U1-29501985

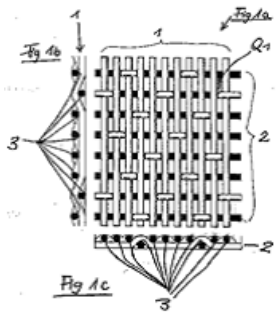

B07B 1/4681

{Meshes of intersecting, non-woven, elements}

Definition statement

This place covers:

Illustrative example of subject matter classified in this group:

FR-A1-2880289

B07B 1/469

{Perforated sheet-like material}

Definition statement

This place covers:

Illustrative example of subject matter classified in this group:

DE-U1-20018385

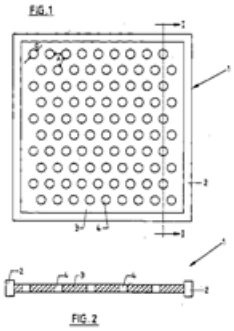

B07B 1/48

Stretching devices for screens

Definition statement

This place covers:

Illustrative example of subject matter classified in this group:

US-A-5221008

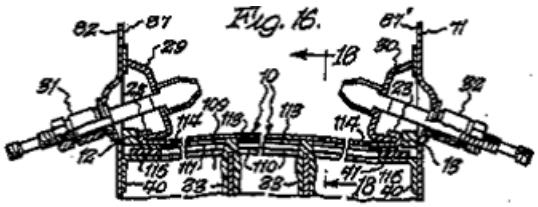

B07B 1/485

{Devices for alternately stretching and sagging screening surfaces}

Definition statement

This place covers:

Illustrative example of subject matter classified in this group:

DE-A1-3411719

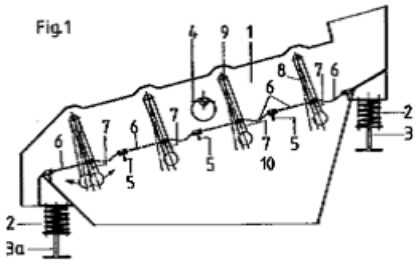

B07B 1/49

stretching more than one screen of screen section by the same or different stretching means

Definition statement

This place covers:

Illustrative example of subject matter classified in this group:

DE-C-608376

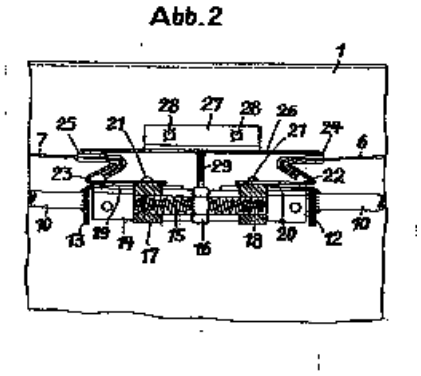

B07B 1/522

{with brushes}

Definition statement

This place covers:

Illustrative example of subject matter classified in this group:

FR-A-1059722

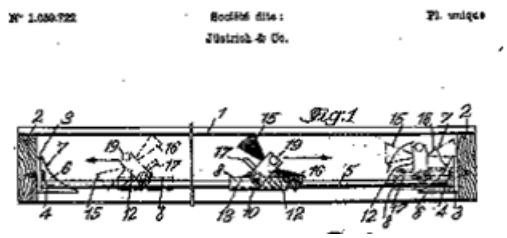

B07B 1/524

{the brushes being rotating}

Definition statement

This place covers:

Illustrative example of subject matter classified in this group:

DE-U1-20214115

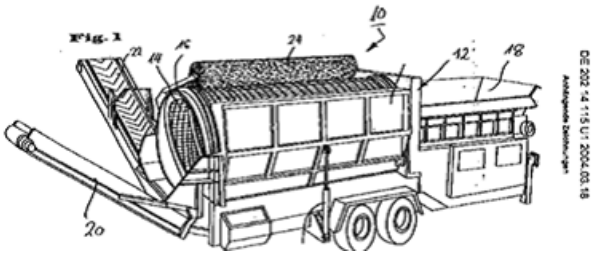

B07B 1/526

{with scrapers}

Definition statement

This place covers:

Illustrative example of subject matter classified in this group:

US-A-4289614

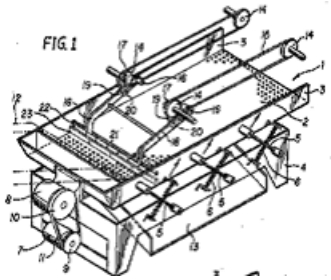

B07B 1/528

{the scrapers being rotating}

Definition statement

This place covers:

Illustrative example of subject matter classified in this group:

US-A-3863765

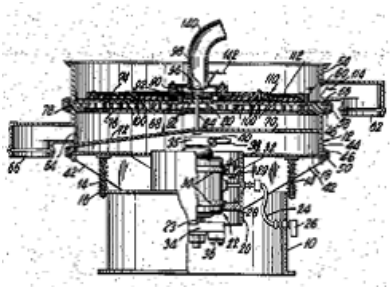

B07B 1/54

with beating devices

Definition statement

This place covers:

Illustrative example of subject matter classified in this group:

DE-A1-2223079

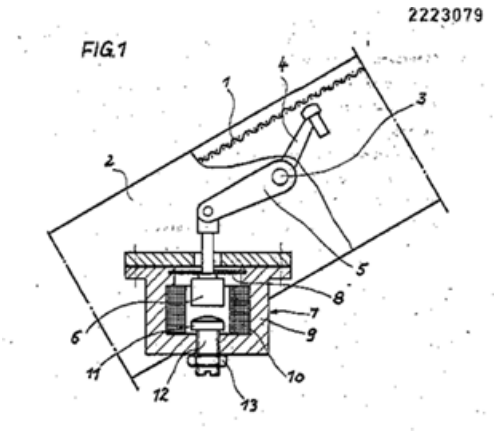

B07B 1/55

with fluid jets

Definition statement

This place covers:

Illustrative example of subject matter classified in this group:

GB-A-1193260

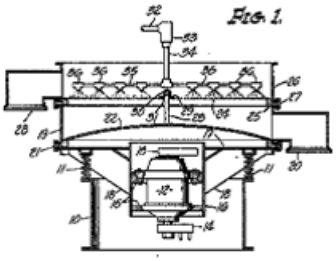

B07B 1/56

Heated screens

Definition statement

This place covers:

Illustrative example of subject matter classified in this group:

FR-A1-2567776

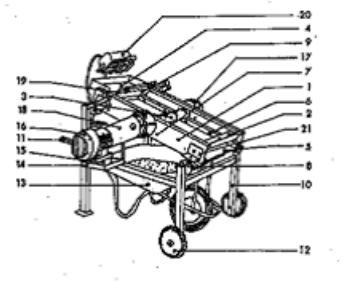

B07B 1/58

heated by heated fluid

Definition statement

This place covers:

Illustrative example of subject matter classified in this group:

DE-C-870935

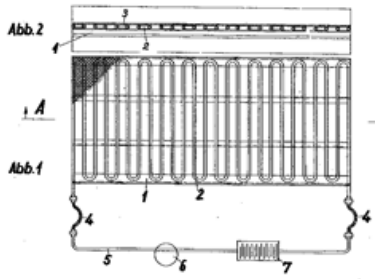

B07B 1/62

heated by direct electric heating

Definition statement

This place covers:

Illustrative example of subject matter classified in this group:

FR-E-61502

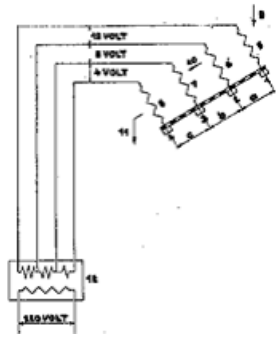

B07B 4/00

Separating solids from solids by subjecting their mixture to gas currents (using tables or jigs B03B 4/00)

Definition statement

This place covers:

Illustrative example of subject matter classified in this group:

EP-A2-1072800

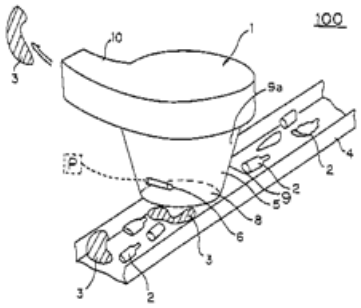

B07B 4/02

while the mixtures fall

Definition statement

This place covers:

Illustrative example of subject matter classified in this group:

WO-A1-2010/056220

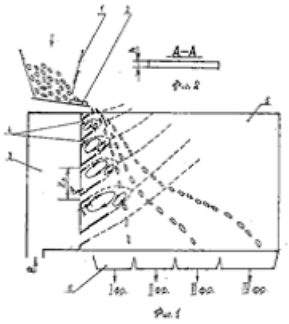

B07B 4/025

{the material being slingered or fled out horizontally before falling, e.g. by dispersing elements}

Definition statement

This place covers:

Illustrative example of subject matter classified in this group:

GB-A-1526050

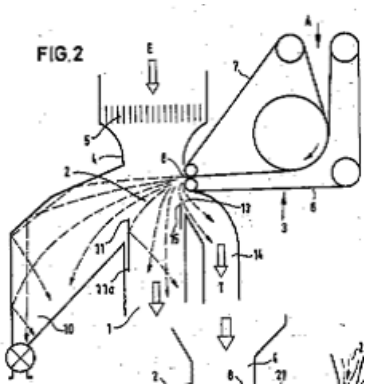

B07B 4/04

in cascades

Definition statement

This place covers:

Illustrative example of subject matter classified in this group:

US-A-4568453

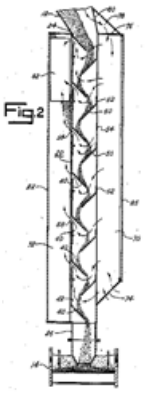

B07B 4/06

using revolving drums

Definition statement

This place covers:

Illustrative example of subject matter classified in this group:

US-A-4207177

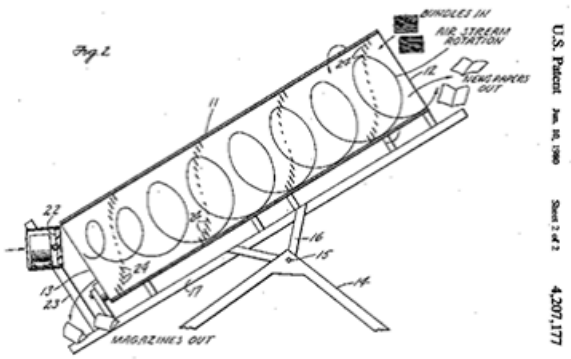

B07B 4/08

while the mixtures are supported by sieves, screens, or like mechanical elements

Definition statement

This place covers:

Illustrative example of subject matter classified in this group:

DE-U1-202010004167

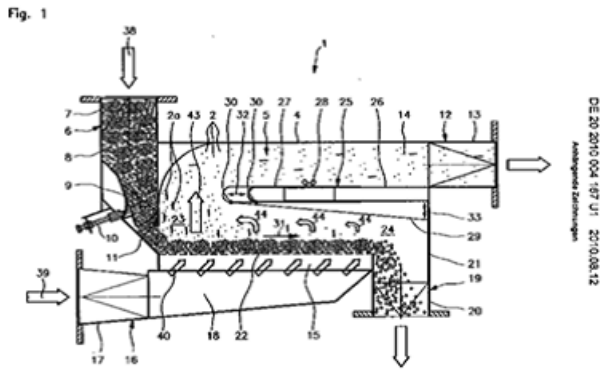

B07B 7/00

Selective separation of solid materials carried by, or dispersed in, gas currents (sieves of filters for separating dispersed particles from gases or vapours B01D)

Definition statement

This place covers:

Illustrative example of subject matter classified in this group:

EP-A1-1591172

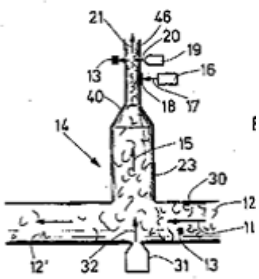

B07B 7/01

using gravity

Definition statement

This place covers:

Illustrative example of subject matter classified in this group:

US-B1-6883667

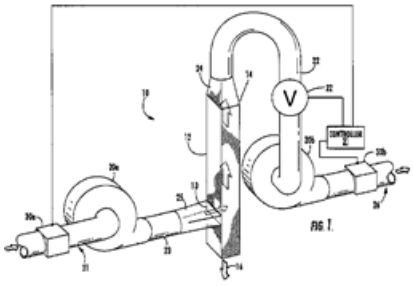

B07B 7/02

by reversal of direction of flow

Definition statement

This place covers:

Illustrative example of subject matter classified in this group:

US-A-4418871

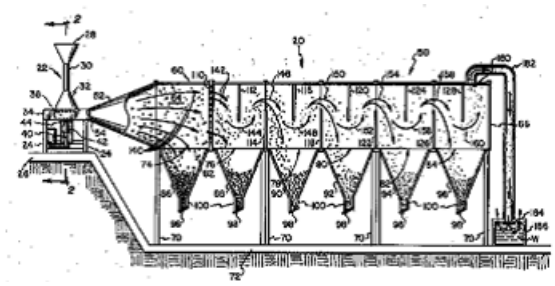

B07B 7/04

by impingement against baffle separators

Definition statement

This place covers:

Illustrative example of subject matter classified in this group:

WO-A1-94/16995

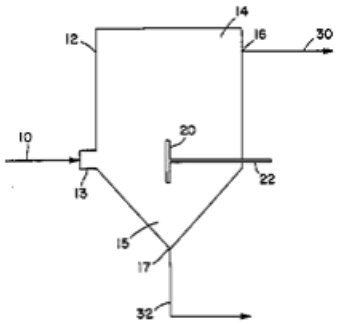

B07B 7/06

by impingement against sieves

Definition statement

This place covers:

Illustrative example of subject matter classified in this group:

WO-A1-95/32811

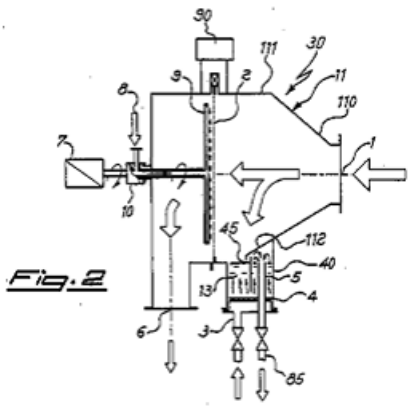

Fig. 2

B07B 7/08

using centrifugal force (centrifuges B04B; cyclones B04C)

Definition statement

This place covers:

Illustrative example of subject matter classified in this group:

US-A-4159942

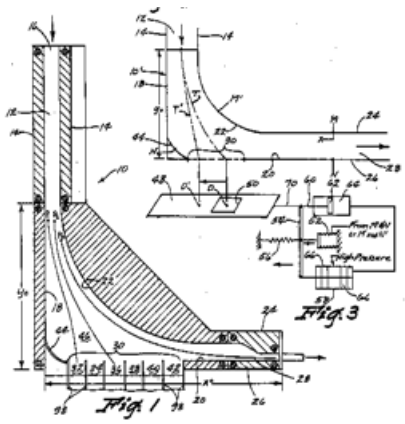

B07B 7/083

generated by rotating vanes, discs, drums, or brushes

Definition statement

This place covers:

Illustrative example of subject matter classified in this group:

DE-A1-19945646

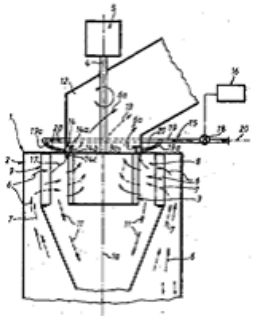

B07B 7/086

generated by the winding course of the gas stream

Definition statement

This place covers:

Illustrative example of subject matter classified in this group:

WO-A1-2006/126577

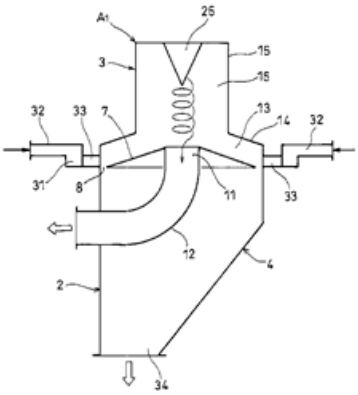

B07B 7/10

having air recirculating within the apparatus

Definition statement

This place covers:

Illustrative example of subject matter classified in this group:

EP-A2-0073567

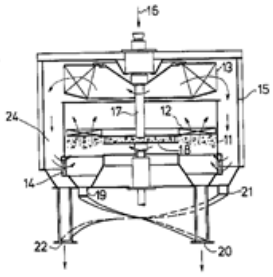

B07B 7/12

with pulsating air currents

Definition statement

This place covers:

Illustrative example of subject matter classified in this group:

US-A-3421619

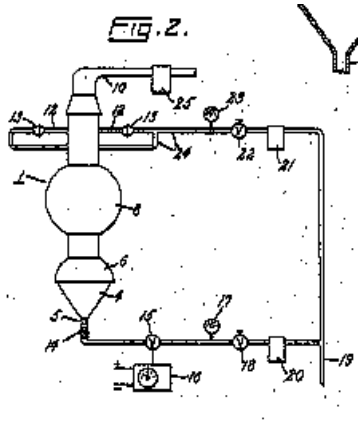

B07B 9/00

Combinations of apparatus for screening or sifting or for separating solids from solids using gas currents; General arrangement of plant, e.g. flow sheets

Definition statement

This place covers:

Illustrative example of subject matter classified in this group:

US-A1-2002/0175113

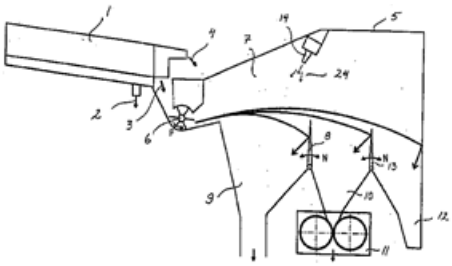

B07B 9/02

Combinations of similar or different apparatus for separating solids from solids using gas currents

Definition statement

This place covers:

Illustrative example of subject matter classified in this group:

EP-A1-2206557

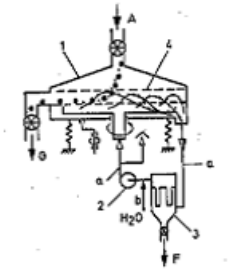

B07B 11/04

Control arrangements

Definition statement

This place covers:

Illustrative example of subject matter classified in this group:

US-B1-6883668

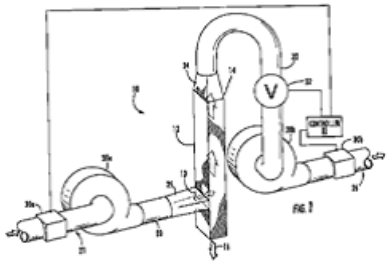

B07B 11/06

Feeding or discharging arrangements

Definition statement

This place covers:

Illustrative example of subject matter classified in this group:

FR-A-2553009

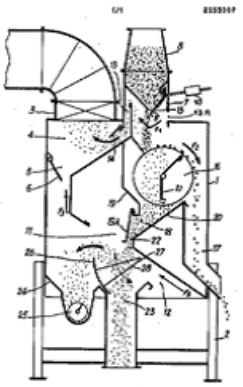

B07B 11/08

Cleaning arrangements

Definition statement

This place covers:

Illustrative example of subject matter classified in this group:

US-A-4913807

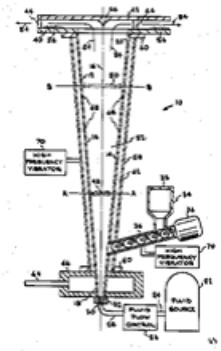

B07B 13/003

{Separation of articles by differences in their geometrical form or by difference in their physical properties, e.g. elasticity, compressibility, hardness}

Definition statement

This place covers:

Illustrative example of subject matter classified in this group:

WO-A1-03/013789

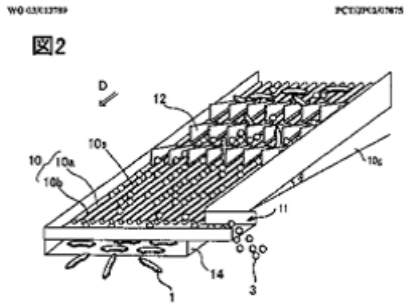

B07B 13/006

{Sorting molded pieces and runners}

Definition statement

This place covers:

Illustrative example of subject matter classified in this group:

FR-A1-2324379

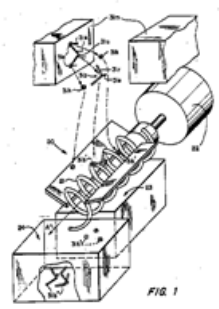

B07B 13/02

Apparatus for grading using pockets for taking out particles from aggregates

Definition statement

This place covers:

Illustrative example of subject matter classified in this group:

FR-A-748864

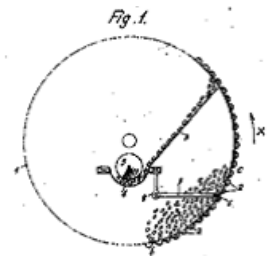

B07B 13/04

according to size

Definition statement

This place covers:

Illustrative example of subject matter classified in this group:

DE-A-4410871

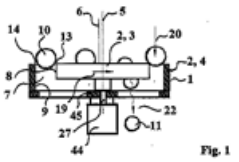

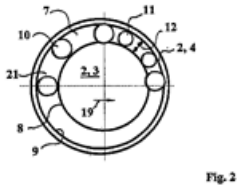

B07B 13/05

using material mover cooperating with retainer, deflector or discharger (B07B 13/065 - B07B 13/075 take precedence)

Definition statement

This place covers:

Illustrative example of subject matter classified in this group:

FR-A-1028638

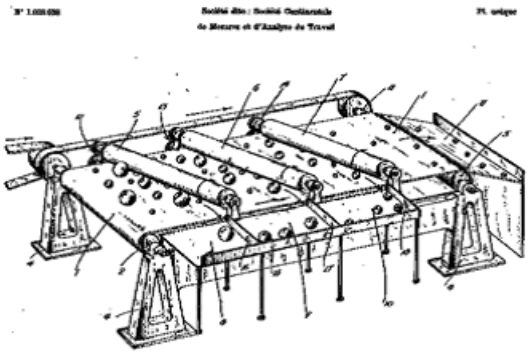

B07B 13/065

Apparatus for grading or sorting using divergent conveyor belts or cables

Definition statement

This place covers:

Illustrative example of subject matter classified in this group:

GB-A-594867

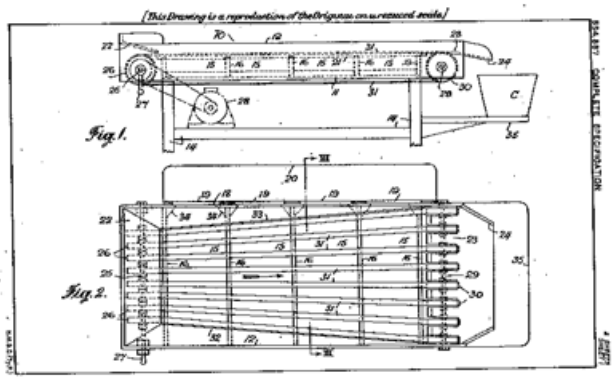

B07B 13/07

Apparatus in which aggregates or articles are moved along or past openings which increase in size in the direction of movement

Definition statement

This place covers:

Illustrative example of subject matter classified in this group:

FR-A-2545385

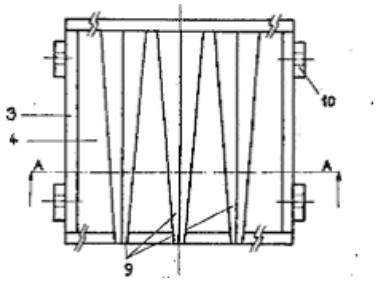

B07B 13/075

Apparatus comprising moving article - receiving openings, the size of which varies as they move

Definition statement

This place covers:

Illustrative example of subject matter classified in this group:

AU-B-592500

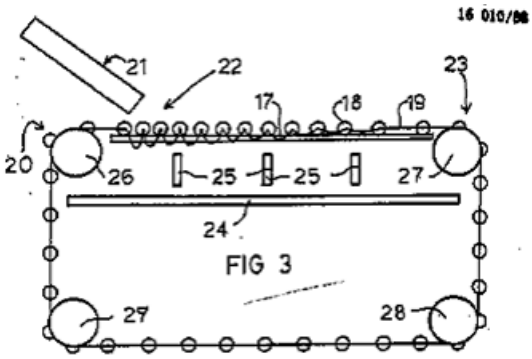

B07B 13/08

according to weight (B07B 13/10 takes precedence)

Definition statement

This place covers:

Illustrative example of subject matter classified in this group:

US-A-5301816

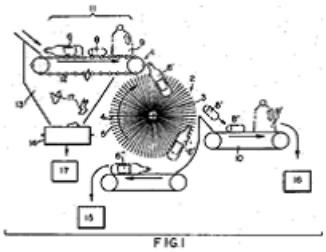

B07B 13/10

using momentum effects

Definition statement

This place covers:

Illustrative example of subject matter classified in this group:

WO-A1-2006/089326

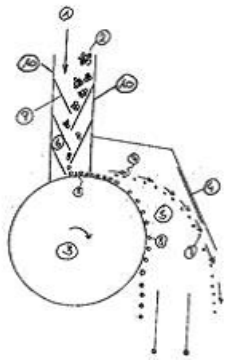

B07B 13/11

involving travel of particles over surfaces which separate by centrifugal force or by relative friction between particles and such surfaces, e.g. helical sorters

Definition statement

This place covers:

Illustrative example of subject matter classified in this group:

US-B1-6382427

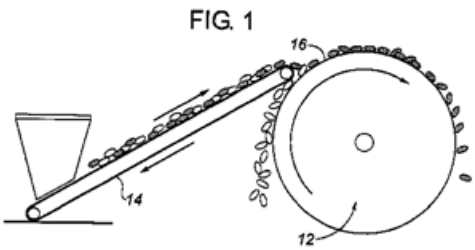

B07B 13/113

{shaking tables (for wet separating B03B 5/04; tables with water impulse B03B 5/70; pneumatic tables B03B 4/02; moving screens B07B 1/28)}

Definition statement

This place covers:

Illustrative example of subject matter classified in this group:

US-A1-2002117428

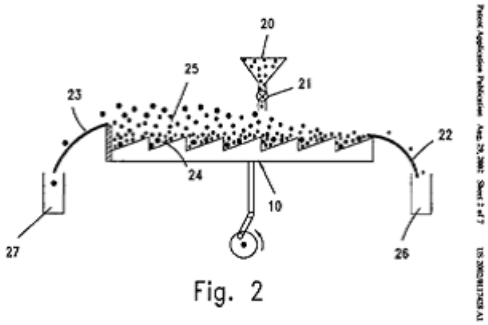

Fig. 2

B07B 13/116

{stratification of dry granular material on a continuously travelling surface, e.g. belt conveyor (vanner for wet separation B03B 5/08)}

Definition statement

This place covers:

Illustrative example of subject matter classified in this group:

US-A-3419143

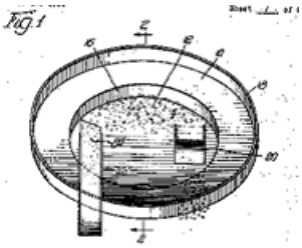

B07B 13/16

Feed or discharge arrangements

Definition statement

This place covers:

Illustrative example of subject matter classified in this group:

WO-A-03/068406

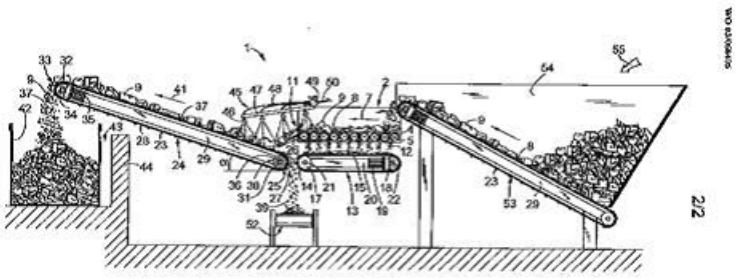

FIG. 3

B07B 13/18

Control

Definition statement

This place covers:

Illustrative example of subject matter classified in this group:

US-A-5024334

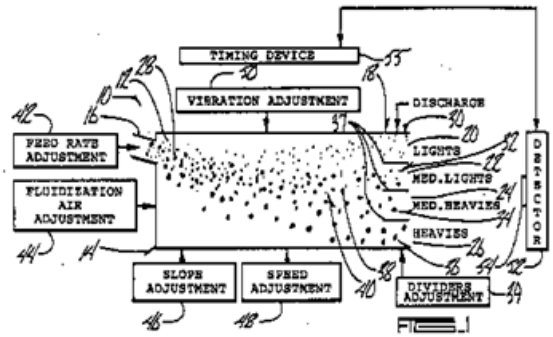

B07B 15/00

Combinations of apparatus for separating solids from solids by dry methods applicable to bulk material, e.g. loose articles fit to be handled like bulk material (using wet methods B03B 7/00; using gas currents B07B 9/00)

Definition statement

This place covers:

Illustrative example of subject matter classified in this group:
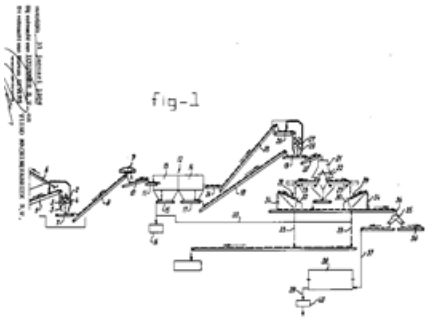
BE-A-898799