CLASS 37, EXCAVATING

SECTION I - CLASS DEFINITION

This class relates to the broad art of digging, moving, and handling material. This class includes method or apparatus for the removal of a tree, stone, soil, or snow from an in situ location, either on the earth's surface or beneath a body of water.

GENERAL NOTE: Wherever the drawings in this class (37) are associated with the definitions, they are merely used to illustrate the basic concept encompassed by the definition of that subclass and should not be construed as limiting the scope of the subject matter covered by that subclass.

SECTION II - LINES WITH OTHER CLASSES AND WITHIN THIS CLASS

The classes in References to Other Classes, below, contain art relating to this class, but special in application. Hence patents properly classifiable in those classes would be excluded from this class (37).

SECTION III - REFERENCES TO OTHER CLASSES

SEE OR SEARCH CLASS:

15, Brushing, Scrubbing, and General Cleaning, for art relating to Class 37, but special in application.

44, Fuel and Related Compositions, for art relating to Class 37, but special in application.

56, Harvesters, for art relating to Class 37, but special in application.

104, Railways, for art relating to Class 37, but special in application.

111, Planting, for art relating to Class 37, but special in application.

125, Stone Working, for art relating to Class 37, but special in application.

166, Wells, for art relating to Class 37, but special in application.

171, Unearthing Plants or Buried Objects, for art relating to Class 37, but special in application.

172, Earth Working, for the relationship between Class and Class 37 see the Class Definition of Class 172, Lines with Other Classes, “Subject Matter Relating To Snow Removal, To Working The Earth For Industrial Purposes, etc.” and also the Search Class Notes.

175, Boring or Penetrating the Earth, for art relating to Class 37, but special in application. and for the line between Class 37 and Class 175, see the class definition of Class 175, Lines With Other Classes, “Tools,” and References to Other Classes.

198, Conveyors: Power-Driven, for art relating to Class 37, but special in application.

209, Classifying, Separating, and Assorting Solids, for art relating to Class 37, but special in application.

210, Liquid Purification or Separation, subclass 170.04 for liquid purification or separation means for excavating means.

212, Traversing Hoists, for art relating to Class 37, but special in application.

241, Solid Material Comminution or Disintegration, for art relating to Class 37, but special in application, and see the class definition of that class, Lines With Other Classes, Material Handling, Excavating, Distributing, Harvesting and References to Other Classes for the line.

294, Handling: Hand and Hoist-Line Implements, for art relating to Class 37, but special in application.

299, Mining or In Situ Disintegration of Hard Material, for art relating to Class 37, but special in application, and see the class definition of Class 299, References To Other Classes, for the line.

406, Conveyors: Fluid Current, for art relating to Class 37, but special in application.

366, Agitating, for art relating to Class 37, but special in application.

404, Road Structure, Process, or Apparatus, for art relating to Class 37, but special in application.

405, Hydraulic and Earth Engineering, for art relating to Class 37, but special in application.

414, Material or Article Handling, for art relating to Class 37, but special in application.

SECTION IV - GLOSSARY

APRON

This device is the pivotally mounted front covering for a scoop adapted to pivot to an open position when loading and unloading and to a closed position when holding and transporting material.

BACKHOE

This is a material handling machine which includes a

boom pivoted to a vehicle, a handle or dipstick pivoted to the boom, and bucket or scoop pivoted to the dipstick with the open top of the bucket facing back toward the vehicle.

BOOM

This is a device comprising an elongated beam adapted to project from an excavating device for the purpose of supporting the excavating equipment and wherein the device is normally pivoted to a support.

BOWL

This device is a portion of a scoop which holds and carries the excavated material during transport. The scoop portion can be adapted to be used in connection with an apron, elevator, or ejector.

CLAMSHELL

This device is an excavating or handling tool having two similar jaws which close upon material for excavating and open for dumping.

DREDGE

This is a machine for excavating material at the bottom or the banks of a body of water.

EARTH

This term is applied to the fragmental material composing part of the surface of the globe.

GROUND

This term is applied to the solid surface of the earth or the floor of a body of water, especially a sea, river, or lake.

ORANGE-PEEL

This implement comprises an excavating tool having two hemispherical jaws which close upon material for excavating and open when dumping.

SPUD

In a dredge, this is an elongated member provided with a lifting tackle at the top and fused to hold or remove the dredge by contact with the earth.

SUBCLASSES

3 PEAT EXCAVATORS:
This subclass is indented under the class definition. Devices for excavating peat.

(1) Note. Compare Class 44, Fuel and Related Compositions, subclasses 630+.

SEE OR SEARCH CLASS:
172, Earth Working, subclass 19 for sod cutters.
299, Mining or In Situ Disintegration of Hard Material, appropriate subclass for subject matter relating to the mining of coal.

91 Wheel excavator:
This subclass is indented under subclass 347. Apparatus wherein the digger is a wheel.

(1) Note. Compare this class, subclass 393.

92 Longitudinal axis:
This subclass is indented under subclass 91. Apparatus wherein the axis of the digging wheel extends longitudinally of the ditch.

(1) Note. Compare this class, subclasses 209+, 244+, and 331.

93 Conveyor:
This subclass is indented under subclass 92. Apparatus wherein the excavator delivers to a conveyor.

94 Transverse axis:
This subclass is indented under subclass 91. Apparatus wherein the axis of the excavator extends across the axis of the ditch.

95 Conveyor:
This subclass is indented under subclass 94. Apparatus wherein the excavator delivers to a conveyor.

96 Longitudinal endless:
This subclass is indented under subclass 95. Apparatus wherein an endless conveyor runs longitudinally of the ditch.

97 Transverse endless:
This subclass is indented under subclass 95. Apparatus wherein an endless conveyor extends crosswise of the ditch.

104 RAILWAY GRADERS:
This subclass is indented under the class definition. Devices forming the bed or slopes of a railway.

(1) Note. Compare this class, subclasses 353+.

(2) Note. Compare Class 104, Railways, subclass 2.

105 Side former:
This subclass is indented under subclass 104. Devices for working on the sides of a railway and shaping the bed.

106 Scoop:
This subclass is indented under subclass 105. Devices wherein the earthworking implement is some form of scoop or shovel.

107 Endless conveyor:
This subclass is indented under subclass 106. Devices wherein the scoop delivers to an endless conveyor.

142.5 DITCH FILLER:
This subclass is indented under the class definition. Apparatus which is specially adapted to place earth in a ditch.

SEE OR SEARCH THIS CLASS, SUBCLASS:
395, for a cable-operated boom-type scraper or the like adapted to place earth in a ditch.

182 ORANGE-PEEL BUCKETS:
This subclass is indented under the class definition. Apparatus comprising grab buckets having more than two grapples.

184 Common pivot:
This subclass is indented under subclass 461. Subject matter wherein each side grapple has a common pivot on which they are hinged together.

185 Crossed lever:
This subclass is indented under subclass 184. Subject matter wherein the operating levers extend from each shell and cross each other at the common pivot.

186 Contiguous pivots:
This subclass is indented under subclass 461. Subject matter wherein each shell grapple is pivoted on a separate pivot close together.

187 Spaced pivots:
This subclass is indented under subclass 461. Subject matter wherein the pivots are spaced far apart on the supporting frame.

188 Link-connected:
This subclass is indented under subclass 461. Subject matter wherein the shells are connected indirectly to the support by means of links.

189 ROTARY DIGGER:
This subclass is indented under the class definition. General miscellaneous subclass with the rotary excavators.

(1) Note. Compare this class, subclasses 209+, 238, 242+, 244+, 326+, 350+, 351, 355, and 357.

(2) Note. Compare Class 198, Conveyors: Power-Driven, subclass 9.

SEE OR SEARCH CLASS:
175, Boring or Penetrating the Earth, appropriate subclasses for a rotary tool for boring into the earth and particularly subclasses 327+ for a rotary type bit or bit element adapted for boring into the earth.
299, Mining or In Situ Disintegration of Hard Material, appropriate subclass, and particularly subclass 101 and see the search notes therein for a rotary type cutter for mining or disintegrating hard material in situ.

190 Endless conveyor:
This subclass is indented under subclass 189. Subject matter wherein the digger delivers material to an endless conveyor.

195 PROCESSES:
This subclass is indented under the class definition. Methods of excavating.

SEE OR SEARCH THIS CLASS, SUBCLASS:
197, for a method of excavating snow.

SEE OR SEARCH CLASS:
175, Boring or Penetrating the Earth, subclasses 57+ for processes of earth boring.

196 SNOW OR ICE REMOVING OR GROOMING BY PORTABLE DEVICE:
This subclass is indented under the class definition. Subject matter relating to either (a) a process of clearing snow or ice from a surface, or preparing snow or ice for passage thereover, by the use of the movable excavating apparatus; or (b) the excavating apparatus or a component part thereof.

197 Process:
This subclass is indented under subclass 196. A method including steps performed when either clearing the surface or preparing the snow or ice.

198 Railway clearer:
This subclass is indented under subclass 196. Apparatus adapted to remove snow or ice from a railroad trackway.

199 With melter:
This subclass is indented under subclass 198. Apparatus including means for changing the excavated snow or ice from its solid state to a liquid state.

SEE OR SEARCH THIS CLASS, SUBCLASS:
227, for a general purpose snow excavator with melter, and see search notes therein for reference to other classes.

200 Heated plow:
This subclass is indented under subclass 199. Apparatus including a transversely extending, generally vertically disposed moldboard, wherein heat is supplied to the moldboard.

201 Explosive:
This subclass is indented under subclass 198. Apparatus including means for blasting through snow or ice with an explosive.

202 Fluid current conveyor:
This subclass is indented under subclass 198. Apparatus wherein snow or ice is transported by a stream of flowable material.

203 For clearing single rail of set:
This subclass is indented under subclass 198. Apparatus wherein the trackway includes a plurality of rails, and including an implement adapted to remove snow or ice from an individual rail of the plurality.

(1) Note. There may be a plurality of implements, each removing snow or ice from a different rail.

SEE OR SEARCH CLASS:
104, Railways, subclasses 279+ for a device which clears a track of material other than snow or ice.

204 Electrified rail:
This subclass is indented under subclass 203. Apparatus including an implement adapted to remove snow or ice from a rail which carries electricity.

205 Including rotary excavating tool:
This subclass is indented under subclass 203. Apparatus which includes an implement fixed to a shaft adapted to rotate when in use.

206 And scraper blade:
This subclass is indented under subclass 205. Apparatus also including a transversely extending, generally vertically disposed moldboard.

207 Including means clearing side of, or groove in, rail:
This subclass is indented under subclass 203. Apparatus wherein the implement includes a portion depending vertically below the top of the rail and functioning to remove snow or ice either alongside the rail or within a slot formed in the surface of the rail.

208 With endless conveyor:
This subclass is indented under subclass 198. Apparatus including a closed loop, belt or chain-type conveying means.

209 Having rotary excavating tool:
This subclass is indented under subclass 198. Apparatus including an implement fixed to a shaft adapted to rotate when in use.

210 Plural rotary tools:
This subclass is indented under subclass 209. Apparatus wherein a plurality of implements is carried either by a plurality of rotary shafts, each carrying an implement, or by a single rotary shaft.

211 Diverse tools performing different stages of operation:
This subclass is indented under subclass 210. Apparatus wherein the implements are differently configured, adapted to accomplish various steps in the process of excavating snow or ice.

212 And V-shaped scraper blade:
This subclass is indented under subclass 210. Apparatus including a generally vertically disposed moldboard having two working faces angled relative to one another about a generally vertical axis, diverging from an apex to ends on opposite sides of the apparatus.

(1) Note. The working faces have a V-configuration in plain view.

213 Screw-type auger:
This subclass is indented under subclass 209. Apparatus wherein the implement comprises a helical vane means arranged to rotate upon its axis.

214 Having scraper blade:
This subclass is indented under subclass 198. Apparatus including a transversely extending, generally vertically disposed moldboard.

215 Inclined plane with V-divider:
This subclass is indented under subclass 214. Apparatus wherein the moldboard includes a pair of working faces angled relative to one another about a generally vertical axis, the moldboard being carried by a substantially horizontal base plate sloping upwardly from its leading edge.

216 Having auxiliary blade or shiftable divider:
This subclass is indented under subclass 215. Apparatus wherein either the moldboard, or an additionally vertically disposed moldboard, is mounted for angular adjustment upon the base plate.

217 V-shaped:
This subclass is indented under subclass 214. Apparatus wherein the moldboard includes a pair of working faces angled relative to one another about a generally vertical axis, diverging from an apex to ends on opposite sides of the apparatus.

(1) Note. The working faces have a V-configuration in plain view.

218 Diagonal:
This subclass is indented under subclass 214. Apparatus wherein the moldboard is obliquely angled about a generally vertical axis relative to its intended direction of motion.

219 Snow or ice surface groomer:
This subclass is indented under subclass 196. Apparatus adapted to prepare a layer of snow or ice for use as a support surface.

(1) Note. The layer may be prepared for use as a ski trail, a snowmobile trail, an ice-skating rink, etc.

SEE OR SEARCH CLASS:
62, Refrigeration, appropriate subclass for or ice-making apparatus.
104, Railways, subclass 136 for sledways having an ice track.
299, Mining or In Situ Disintegration of Hard Material, subclasses 24+ for ice-harvesting devices.
404, Road Structure, Process, or Apparatus, subclasses 90+ for road-building apparatus with means for in situ comminution of surface material.

220 Including rut cutter:
This subclass is indented under subclass 219. Apparatus which includes means adapted to cut a groove in the surface.

221 Having diverse tools:
This subclass is indented under subclass 219. Apparatus including a plurality of implements having different sizes, shapes, or character of operation.

222 Including rotary tool:
This subclass is indented under subclass 221. Apparatus including an implement fixed to a shaft adapted to rotate when in use.

223 Having rotary tool:
This subclass is indented under subclass 219. Apparatus including an implement fixed to a shaft adapted to rotate when in use.

224 Compacting roller:
This subclass is indented under subclass 223. Apparatus wherein the tool is a cylindrical member adapted to roll over and compress the layer of snow or ice.

225 With compressor die:
This subclass is indented under subclass 196. Apparatus including a device for compacting and molding the excavated snow or ice.

(1) Note. An example of apparatus found herein is one wherein snow is excavated and subsequently pressed into a given shape and size.

SEE OR SEARCH CLASS:
100, Presses, appropriate subclass for a compressor die, per se.

226 And heater:
This subclass is indented under subclass 225. Apparatus including means for adding heat to the snow or ice.

SEE OR SEARCH CLASS:
100, Presses, subclasses 92+ for a compressor die with heater, per se.

227 With melter:
This subclass is indented under subclass 196. Apparatus including a means for changing the excavated snow or ice from it solid state to a fluid state.

SEE OR SEARCH CLASS:
56, Harvesters, subclass 12.2 for a motorized harvester using heat form the engine.
126, Stoves and Furnaces, subclasses 271.1+ for in situ melting by a surface heater; and subclass 343.5 for a melting furnace, per se.
239, Fluid Sprinkling, Spraying, and Diffusing, subclasses 650+ for a scatterer for a solid material which causes melting.
252, Compositions, subclass 70 for a material which causes in situ melting of snow or ice.
299, Mining or In Situ Disintegration of Hard Material, subclasses 3+ for the in situ conversion from solid to fluid of a material within the earth.
404, Road Structure, Process, or Apparatus, subclasses 77 and 79 for a method for building a road with material other than ice or snow, wherein the material is heated; and subclass 95 for apparatus for building a road with material other than ice or snow, wherein the material is heated.

228 Having heated transport chamber:
This subclass is indented under subclass 227. Apparatus including a receptacle adapted to receive and carry the liquified snow or ice, and means for supplying heat to the receptacle.

229 Electric or solar heat source:
This subclass is indented under subclass 228. Apparatus wherein the means for heating the receptacle uses energy produced either by electricity or by the sun.

230 Manually powered:
This subclass is indented under subclass 227. Apparatus wherein a human being provides the power to either move or operate the heated excavator.

231 With specific means to facilitate connection to, or disconnection from, vehicle:
This subclass is indented under subclass 196. Apparatus including means adapted to expedite the attachment or detachment of the implement to a vehicle.

SEE OR SEARCH CLASS:
172, Earth Working, subclasses 272+ for means to facilitate mounting an earthworking implement on a vehicle; and subclass 817 for an earthworking blade removably attached to a vehicle.

232 Vehicle mount with obstacle responsive trip, or yieldable tool (e.g., brush):
This subclass is indented under subclass 196. Apparatus wherein either (a) means is provided for attaching an excavating implement to a vehicle, including means permitting the implement to shift with respect to the vehicle when it contacts an obstacle or (b) an excavating implement itself includes a portion which yields when it contacts an obstacle.

SEE OR SEARCH CLASS:
56, Harvesters, subclass 10.4 for a harvester having a cutter unit which retracts in response to an obstruction.
172, Earth Working, subclasses 261+ for an earthworking tool which retracts in response to an overload.

233 Resilient impeller or blade:
This subclass is indented under subclass 232. Apparatus including either a van means carried by a shaft, or a moldboard, which contains either an elastically deformable portion or a plurality of segments mounted elastically relative to one another.

234 Including specific hydraulic control system to position implement:
This subclass is indented under subclass 196. Apparatus wherein adjustment of an excavating implement relative to a carrying means is performed by a control system which incorporates fluid circuitry and includes means for producing or controlling fluid pressure within the system.

SEE OR SEARCH CLASS:
91, Motors: Expansible Chamber Type, appropriate subclass for a hydraulic motor, per se.
172, Earth Working, subclass 812 for an hydraulic system controlling an earthworking blade.

235 Vehicle mount including power lift:
This subclass is indented under subclass 196. Apparatus including means to connect an excavating implement to a vehicle, and a power system for vertically moving the implement.

(1) Note. The purpose of the power system might be either to adjust the excavating height of the implement, or to raise the implement for transporting it.

SEE OR SEARCH CLASS:
172, Earth Working, subclasses 452+ for power means to lift an earthworking implement for transporting; and subclasses 828+ for power means to lift an earthworking blade.

236 Power means is hydraulically actuated piston:
This subclass is indented under subclass 235. Apparatus in which the power system includes a piston axially movable within a cylinder by liquid pressure.

237 With endless conveyor:
This subclass is indented under subclass 196. Apparatus including a closed loop, belt or chain-type conveying means.

SEE OR SEARCH THIS CLASS, SUBCLASS:
305, for a self-loading vehicle, other than a snow or ice excavating apparatus, which includes an endless conveyor.

SEE OR SEARCH CLASS:
172, Earth Working, subclass 33 for earthworking apparatus including a power driven, endless conveyor.
198, Conveyors: Power-Driven, appropriate subclass for an endless conveyor, per se.

238 And rotary excavating tool:
This subclass is indented under subclass 237. Apparatus including an implement fixed to a shaft adapted to rotate when in use.

239 Multistage conveyors:
This subclass is indented under subclass 237. Apparatus including a plurality of various closed loop conveying means, the various means each adapted to accomplish a different step in the excavating process.

240 Carrying excavating tool:
This subclass is indented under subclass 237. Apparatus wherein the conveying means carries an implement adapted to scrape snow or ice from the surface to be cleared.

241 Combined or convertible:
This subclass is indented under subclass 196. Apparatus having means associated therewith for performing some function, normally the subject matter of another class, in addition to the basic operation of excavation; or which can by an adjustment, addition, removal, or reassembly of one or more of its parts become basic subject matter or another class.

242 Rotary excavating tool:
This subclass is indented under subclass 241. Apparatus including an implement fixed to a shaft adapted to rotate when in use.

243 Lawnmower:
This subclass is indented under subclass 242. Apparatus combined with, or convertible to, apparatus adapted to cut grass.

244 Motorized rotary excavating tool:
This subclass is indented under subclass 196. Apparatus including an implement fixed to a shaft driven rotationally by a mechanical power means when in use.

245 Tool arresting means responsive to sensed condition:
This subclass is indented under subclass 244. Apparatus including means reacting to a sensed operating condition encountered by the apparatus which interrupts the rotation of the shaft.

246 Electric motor drive:
This subclass is indented under subclass 244. Apparatus wherein the shaft is driven by an electric motor.

247 Rotor shaft adjustable relative to direction of travel:
This subclass is indented under subclass 244. Apparatus including means to adjust the shaft to any one of a plurality of selected angular orientations with respect to the intended direction of motion.

248 Diverse multistage rotary tools or tool portions (e.g., feeding and throwing, etc.):
This subclass is indented under subclass 244. Apparatus including either a plurality of differently configured rotary implements, or a rotary implements having a plurality of a differently configured sections, the implements or sections adapted to accomplish various steps in the process of excavating snow or ice.

(1) Note. An example of the apparatus found in this subclass and its indents comprises a first rotary implement feeding snow to a second rotary implement, which throws the snow and away from the apparatus.

249 Including screw-type auger for first stage:
This subclass is indented under subclass 248. Apparatus wherein the implement or section adapted to accomplish the primary step comprises a helical vane means arranged to rotate upon its axis.

SEE OR SEARCH CLASS:
406, Conveyors: Fluid Current, subclasses 53+ for a general purpose, fluid current conveyor cooperating with a driven screw-type conveyor.

250 Augers on separate shafts:
This subclass is indented under subclass 249. Apparatus including a plurality of shafts carrying helical vane means.

251 And centrifugal impeller for final stage:
This subclass is indented under subclass 249. Apparatus wherein the implement or section adapted to accomplish the last setup includes a generally radially projecting vane means which transports snow or ice by centrifugal force.

252 Auger and impeller on single shaft:
This subclass is indented under subclass 251. Apparatus wherein both the helical vane means and the planar vane means are carried by the same shaft.

253 Fed by scraper blade:
This subclass is indented under subclass 244. Apparatus wherein snow or ice is directed to the rotating implement by a transversely extending, generally vertically disposed moldboard.

SEE OR SEARCH THIS CLASS, SUBCLASS:
267+, for a scraper blade, per se.

254 Including screw-type auger:
This subclass is indented under subclass 253. Apparatus wherein the implement comprises a helical vane means arranged to rotate upon its axis.

255 Augers on separate shafts:
This subclass is indented under subclass 254. Apparatus including a plurality of shafts carrying helical vane means.

256 Including centrifugal impeller:
This subclass is indented under subclass 253. Apparatus wherein the implement includes a generally radially projecting vane means adapted to transport snow or ice centrifugal force.

257 Screw-type auger:
This subclass is indented under subclass 244. Apparatus wherein the implement comprises a helical vane means arranged to rotate upon its axis.

SEE OR SEARCH CLASS:
198, Conveyors: Power-Driven, subclasses 657+ for a screw-type conveyor, per se.

258 Having plural vane segments:
This subclass is indented under subclass 257. Apparatus wherein the vanes means comprises a plurality of plate-like elements secured to the shaft.

259 Centrifugal impeller:
This subclass is indented under subclass 244. Apparatus wherein the implement includes a generally radially projecting vane means adapted to transport snow or ice by centrifugal force.

260 Having specific flow guide:
This subclass is indented under subclass 244. Apparatus wherein significance is attributed to a guide means adapted to control the flow path of snow or ice being discharged from the apparatus.

(1) Note. A guide means found herein generally comprises either a chute or a deflector shield.

SEE OR SEARCH CLASS:
193, Conveyors, Chutes, Skids, Guides, and Ways, subclasses 2+ for a chute, per se.
198, Conveyors: Power-Driven, subclasses 640 and 641 for a chute or deflector controlling discharge from a throwing conveyor for general use.

261 Having motor powered adjustment:
This subclass is indented under subclass 260. Apparatus wherein the flow guide can be adjusted by a mechanical power means.

(1) Note. Adjustment of the guide means functions to change the discharge flow path.

262 Vane within chute controls flow path:
This subclass is indented under subclass 260. Apparatus including a thin, substantially flat deflecting element situated within the discharge flow path whereby the direction of the flow is controlled.

263 Tool prepares wheel path for passage of wheel:
This subclass is indented under subclass 196. Apparatus having an implement adapted to be attached at one side of a vehicle, wherein the implement clears only a path at the one side.

(1) Note. The implement may be duplicated on the other side of the vehicle.

SEE OR SEARCH THIS CLASS, SUBCLASS:
203+, for a railway clearer including an implement adapted to clear only one rail of a plurality.

SEE OR SEARCH CLASS:
172, Earth Working, subclass 833 for an earthworking scraper blade which prepares a wheel path for passage of the wheel.

264 Scoop:
This subclass is indented under subclass 196. Apparatus having an excavating implement which includes a bottom enclosed upon three sides by vertically extending walls and an open fourth side at its front.

SEE OR SEARCH THIS CLASS, SUBCLASS:

304+, for a general purpose self-loading vehicle.

403+, for a general purpose scraper convertible to a scoop.

411+, for a general purpose excavating scoop, per se.

265 Manually powered:

This subclass is indented under subclass 264. Apparatus wherein a human being provides the power to move or operate the scoop.

SEE OR SEARCH CLASS:

294, Handling: Hand and Hoist-Line Implements, subclass 54.5 for a hand-operated snow shovel which may have relatively abbreviated lips on three sides and subclass 176 for a general purpose hand-operated scoop.

266 Scraper blade:

This subclass is indented under subclass 196. Apparatus including a transversely extending, generally vertically disposed moldboard which has a working face fixed to a carrying means, adapted to deflect or push snow from the surface to be cleared, and a cutting edge at the base of the working face adapted to scrape snow from a surface and feed it to the working face.

SEE OR SEARCH THIS CLASS, SUBCLASS:

446+, for a cutting edge, per se, adapted to be fixed to a scoop.

SEE OR SEARCH CLASS:

172, Earth Working, subclasses 701.1+ for an earthworking moldboard, per se; subclasses 781+ for an earthworking moldboard mounted intermediate to the front and rear of a vehicle; and subclasses 810+ for an earthworking moldboard mounted on the front of a vehicle.

267 Invertible:

This subclass is indented under subclass 266. Apparatus wherein the moldboard can be reversed top to bottom.

(1) Note. Reversing the moldboard in this manner makes it possible to use either the upper or lower edge of the moldboard as a cutting edge.

SEE OR SEARCH CLASS:

172, Earth Working, subclass 34 for an earthworking implement which is adapted to be used upside down.

268 Pulled (e.g., by horse or vehicle):

This subclass is indented under subclass 266. Apparatus including a moldboard adapted to be drawn by a propelling means.

SEE OR SEARCH CLASS:

172, Earth Working, subclass 684.5 for a frame supported, earthworking blade drawn by a vehicle; and subclass 799.5 for a towed earthworking blade with ground support wheels.

269 V-shaped:

This subclass is indented under subclass 268. Apparatus wherein the moldboard includes a pair of working faces angled relative to one another about a generally vertical axis and diverging from an apex to ends on opposite sides of the apparatus.

(1) Note. The working faces have a V-configuration in plan view.

270 Mounted on surface contacting support or guide:

This subclass is indented under subclass 266. Apparatus having auxiliary means attached to the moldboard for either supporting it upon the surface, or giving it direction.

(1) Note. The support or guide may comprise either a skid or a wheel.

SEE OR SEARCH CLASS:

172, Earth Working, subclass 832 for an earthworking scraper blade carrying ground support means.

271 For adjusting height of blade:

This subclass is indented under subclass 270. Apparatus wherein the moldboard can be adjusted to a plurality of elevations above the support means.

272 V-shaped:
This subclass is indented under subclass 266. Apparatus wherein the moldboard includes a pair of working faces angled relative to one another about a generally vertical axis and diverging from an apex to ends on opposite sides of the apparatus.

(1) Note. The working faces have a V-configuration in plan view.

SEE OR SEARCH CLASS:
172, Earth Working, subclasses 732 and 733 for a triangular or V-shaped blade for earthworking.

273 Adjustable or collapsible apex:
This subclass is indented under subclass 272. Apparatus wherein the angle of divergence is adapted to be varied.

(1) Note. The angle might be varied either to change the angle of attack of the working faces when in use, or to facilitate storage of the plow.

274 And auxiliary wing or extension:
This subclass is indented under subclass 272. Apparatus including an additional moldboard-like element.

SEE OR SEARCH THIS CLASS, SUBCLASS:
104, for an apparatus for forming a railway slope.

SEE OR SEARCH CLASS:
172, Earth Working, subclass 782 for a road grader with a laterally offset, inclined shoulder forming blade; subclasses 786+ for a road grader having plural blades; and subclass 815 for a bulldozer having plural blades.

275 Top flap:
This subclass is indented under subclass 274. Apparatus wherein the auxiliary wing or extension is a moldboard like element adapted to be attached adjacent and parallel to the top edge of its primary moldboard.

(1) Note. A common function of a top flap is to prevent snow or ice from blowing over the plow.

276 Diverging forwardly:
This subclass is indented under subclass 272. Apparatus wherein, when the moldboard is moving in its intended direction for use, the apex follows the working faces.

277 Supported on inclined plane:
This subclass is indented under subclass 272. Apparatus wherein the working faces are carried by a substantially horizontal base plate sloping upwardly from its leading edge.

278 Manually powered:
This subclass is indented under subclass 272. Apparatus wherein a human being provides the power to either move or operate the moldboard.

279 Diagonally oriented:
This subclass is indented under subclass 266. Apparatus wherein the moldboard is obliquely angled about a generally vertical axis relative to the intended direction of motion.

280 Including side gate discharge preventer:
This subclass is indented under subclass 279. Apparatus including an element which can be moved into a position adjacent and substantially perpendicular to the working face to selectively act as a barrier preventing discharge of excavated snow from the moldboard.

281 And auxiliary wing or extension:
This subclass is indented under subclass 279. Apparatus including an additional moldboard-like element.

SEE OR SEARCH THIS CLASS, SUBCLASS:
104, for an apparatus for forming a railway slope.

SEE OR SEARCH CLASS:
172, Earth Working, subclass 782 for a road grader with a laterally off-set inclined shoulder forming blade; subclasses 786+ for a road grader having plural blades; and subclass 815 for a bulldozer having plural blades.

282 Supported on inclined plane:
This subclass is indented under subclass 279. Apparatus wherein the moldboard is carried by a substantially horizontal base plate sloping upwardly from its leading edge.

283 Adjustable about central vertical hinge:
This subclass is indented under subclass 279. Apparatus including means for attaching the moldboard to carriage, the means comprising a pivotal connection having a generally vertical axis at the longitudinal midpoint of the moldboard, about which the mold board can be angularly adjusted.

SEE OR SEARCH CLASS:
172, Earth Working, subclasses 792+ and 820+ for an earthworking blade which is adjustable about a central, vertical axis.

284 Manually powered:
This subclass is indented under subclass 279. Apparatus wherein a human being provides the power to either move or operate the moldboard.

285 Manually powered:
This subclass is indented under subclass 196. Apparatus wherein a human being provides the power to either move or operate the excavator.

300 GRAVE DIGGER:
This subclass is indented under the class definition. Apparatus including means to penetrate the ground and remove earth to form a cavity in the ground for receiving a casket or corpse to be buried therein.

SEE OR SEARCH CLASS:
198, Conveyors: Power-Driven, subclasses 300+ for a conveying apparatus entirely supported by mobile ground engaging means.

301 LAND CLEARER:
This subclass is indented under the class definition. Apparatus including means to penetrate the ground to loosen, lift, or remove earth from the ground containing tree, brush, stone, stump, or similar material.

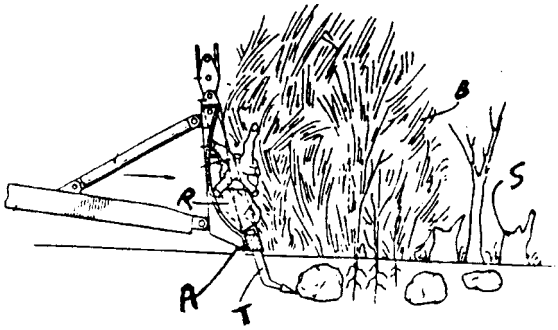

A - Blade, B - Brush; S - Stump; T - Digging tooth; R - Stone

(1) Note. Apparatus for cutting roots below ground for removal of the tree, brush, or stump is proper for this subclass.

SEE OR SEARCH CLASS:
30, Cutlery, for a randomly manipulated implement or machine for cutting a tree above the ground, especially subclasses 166.3+ for a saw, particularly subclass 379.5 for a vehicle mounted, randomly manipulated saw.
47, Plant Husbandry, subclasses 73+ for a plant receptacle for facilitating transplanting of a live plant, e.g., tree.
56, Harvesters, subclasses 400.01+ for a hand manipulated stone rake.
102, Ammunition and Explosives, subclasses 301+ for subject matter for removing a stump by use of an explosive.
111, Planting, subclass 101 for an excavating transplanter.
144, Woodworking, subclasses 34.1+ for a machine for cutting a tree for timber purposes; subclass 334 for a stump removing process which does not include excavation; subclasses 335+ for timber harvesting or processing.
172, Earth Working, subclasses 681+ for plows adapted for cutting roots and incidentally loosening or lifting them, especially subclass 698 for an earth working tool with two standards which may cut roots as it passes through the earth.
198, Conveyors: Power-Driven, subclasses 506+ for hoisting stone or stump.

212, Traversing Hoists, subclasses 76+ for hoisting stone or stump.

254, Implements or Apparatus for Applying Pushing or Pulling Force, subclasses 199+ for apparatus for extracting stump.

294, Handling: Hand and Hoist-line Implements, subclasses 49+ for a hand fork or shovel; subclasses 82.1+ for a hoist line and grab hook.

302 Tree or stump remover:

This subclass is indented under subclass 301. Apparatus (a) for permanently withdrawing a relatively large wooded elongated perennial plant having a single main stem from the earth or (b) for withdrawing a lower portion of such plant from which the upper portion has been removed.

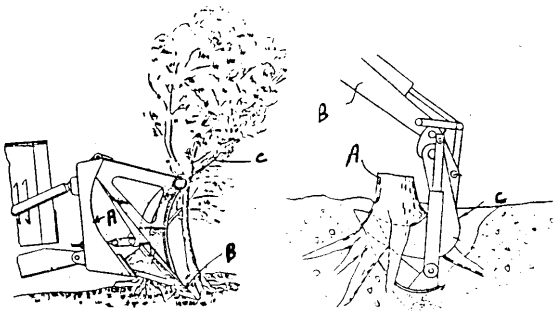

A (left) = Blade; B (left) = Diggingtooth; C (left) = Tree--A (right) = Stump; B (right) = Boomor crane; C (right) = Digging tool

SEE OR SEARCH CLASS:

111, Planting, subclasses 100+ for an implement having means to hold or guide a plant into the ground.

144, Woodworking, subclasses 2.1+, 34.1+, 334, and 335+ for a stump grinder.

172, Earth Working, subclasses 681+ for plows adapted for cutting roots and incidentally loosening or lifting them, especially subclass 698 for an earth working tool with two standards which may cut roots as it passes through the earth.

254, Implements or Apparatus for Applying Pushing or Pulling Force, subclasses 199+ for apparatus for extracting stump.

414, Material or Article Handling, subclass 23, for subject matter which includes a device used for removing, transporting, or transplanting a tree but does not include a digging tool for breaking soil or cutting roots.

303 Stone remover:

This subclass is indented under subclass 301. Apparatus having at least one tine, hook, or similar implement especially adapted for removing a piece of rock from the earth.

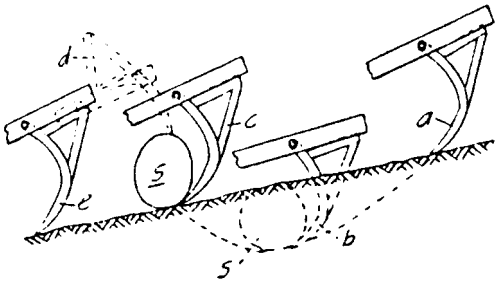

s = Stone; a,b,c,d,e = Various positionsof the digging tool

SEE OR SEARCH CLASS:

56, Harvesters, subclasses 400.01+ for a hand manipulated stone rake.

171, Unearthing Plants or Buried Objects, subclasses 63+ for stone gathering or unearthing by impelling a plant or object portion above the ground.

172, Earth Working, subclasses 63+ for a nondriven earth working tool (e.g., plow, harrow, scraper, or knife).

304 SELF-LOADING VEHICLE:

This subclass is indented under the class definition. Apparatus including a digging tool and an earth holding container which are separately mounted on the same vehicle, wherein the digging tool is either manipulated to place dug earth in the container or directs the earth to an intermediate element (e.g., a conveyor) which places the dug earth in the container.

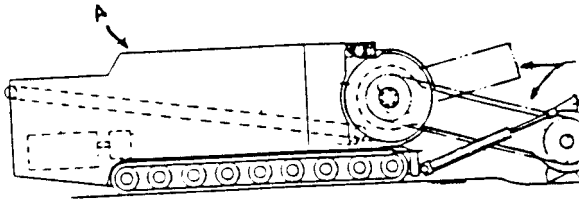

A = Container; B = Boom and means forloading (e.g., conveyor); C = Excavating buckets with diggingedge

(1) Note. If the apparatus is so constructed that the earth receiving container on the vehicle actually takes part in the digging such as by engaging the earth with a leading edge, then the apparatus is a scoop-type excavator.

SEE OR SEARCH THIS CLASS, SUBCLASS:

104+, for a self-loading railway grader (e.g., ballast machine).

411+, for a scoop-type excavator.

SEE OR SEARCH CLASS:

172, Earth Working, subclasses 811+ for a scraper without a bottom (e.g., a bulldozer) to hold earth.

198, Conveyors: Power-Driven, subclasses 701+ for a bucket-type load engaging and conveying means.

414, Material or Article Handling, subclasses 467+ for a vehicle having a load receiving and transporting portion and handling means carried by such vehicle.

305 Having endless digger or conveyor:

This subclass is indented under subclass 304. Apparatus including a continuous feeder belt used to either dig the earth from the ground or remove earth from the digging tool for delivery to a container.

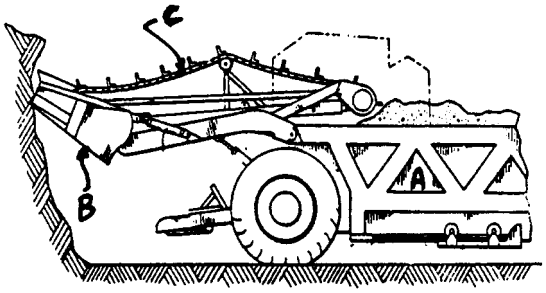

A = Container for dug earth; B = Diggingscoop or bowl with cutter blade; C = Endless conveyor

SEE OR SEARCH THIS CLASS, SUBCLASS:

237+, for snow or ice removing device having an endless conveyor.

462+, for an endless digger including conveyor not used in conjunction with a container.

SEE OR SEARCH CLASS:

198, Conveyors: Power-Driven, subclasses 300+ for a load conveyor or conveyor system supported upon a wheeled carrier; subclasses 506+ for a conveyor section with means to gather or remove material from a mound or pile; subclasses 701+ wherein the load-engaging and conveying section comprises structure in the form of a bucket.

414, Material or Article Handling, subclass 398 for a driven-type conveyor for moving a load onto or into a wheeled-type vehicle; subclasses 507+ for a vehicle which carries a conveyor for loading or unloading.

306 Elevating wheel:

This subclass is indented under subclass 304. Apparatus including a rotating circular frame having digging elements used to either dig the earth from the ground or remove earth from the digging tool for delivery to a container.

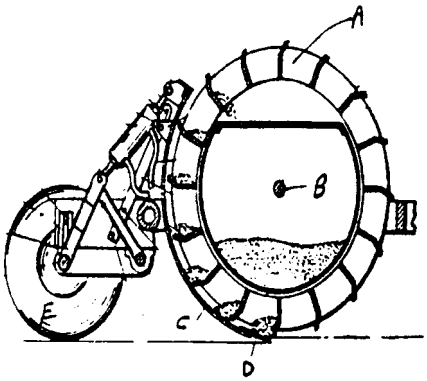

A - Elevating wheel; B - Wheel hub; C - Digging element;D - Digging edge; E - Vehicle wheel

SEE OR SEARCH CLASS:

171, Unearthing Plants or Buried Objects, subclasses 63+ for apparatus for collecting small stones resting on or partially embedded in the ground which may be driven by a tractor wheel.

414, Material or Article Handling, subclasses 439+ for a ground wheel-driven load-handling means.

307 BENEATH A BODY OF WATER (E.G., DREDGER):

This subclass is indented under the class definition. Apparatus especially adapted to excavate material under a mass of liquid such as a sea, lake, river, or stream.

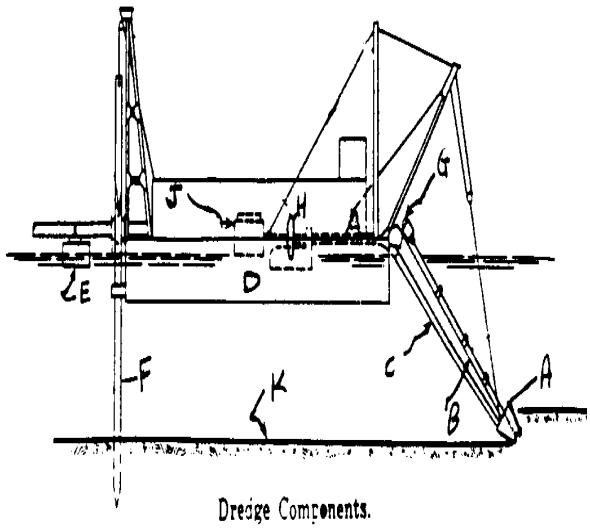

Dredge Components.

A - Cutter; B - Ladder; C - Suction pipe; D - Hull; E - Pontoon;F - Spud; G - Cutter motor; H - Pump; J - Pump motor; K - Dredgedbottom

(1) Note. Class 37 includes a dredger which selectively picks up material (e.g., by a screen in the intake of a suction nozzle). But a dredger means to pick up material and subsequently separate the components thereof is classified elsewhere. See Search Notes below.

SEE OR SEARCH CLASS:

56, Harvesters, subclasses 8+ for a device used for underwater cutting or removing marine plant growth.

175, Boring or Penetrating the Earth, subclasses 5+ for boring a submerged formation.

299, Mining or In Situ Disintegration of Hard Material, subclasses 7+ for excavating under water combined with separating materials under water. See (1) Note above.

405, Hydraulic and Earth Engineering, appropriate subclasses, for control or treatment of water in open channels or other bodies of water, especially subclasses 136+ and 158+ for a step or means for placing a tunnel, string, or conduit beneath a body of water.

308 With signal, scale, indicator, or inspection means:

This subclass is indented under subclass 307. Apparatus including means to either acknowledge, measure, detect, or examine a change in the excavation apparatus, the excavated material, or the environment associated therewith.

SEE OR SEARCH CLASS:

116, Signals and Indicators, for an alarm, indicator, or signal of a mechanical nature.

340, Communications: Electrical, for an alarm, indicator, or signal of an electrical nature.

309 With means to control dredger operation (e.g., movement of dredged material) in response to sensed condition:

This subclass is indented under subclass 307. Apparatus wherein a means is provided for (a) sensing a change in either the excavation appa-

ratus, the excavated material, or the environment associated therewith, and (b) regulating the excavation apparatus, the excavated material, or the environment associated therewith in response to that change.

(1) Note. For a patent to be classified in this subclass, the claim must include at least three elements: (a) a dredger, (b) a sensor to detect a condition, and (c) a controller which responds to the sensor (e.g., pump, motor, valve, solenoid).

SEE OR SEARCH CLASS:

60, Power Plants, subclasses 445+ for condition responsive control of pump or motor displacement.

137, Fluid Handling, subclasses 2+ for a fluid handling process including control of flow by a condition or characteristic of a fluid.

299, Mining or In Situ Disintegration of Hard Material, subclass 1 for subject matter relating to automatic control involved in recovering valuable earth material and disintegrating hard material in situ.

310 Swell compensator:

This subclass is indented under subclass 309. Apparatus including a shock absorbing, tension restoring means provided on the dredger to negate or offset the heave motion of the waves in a body of water so that the excavation apparatus can be maintained at a desired underwater coordinate.

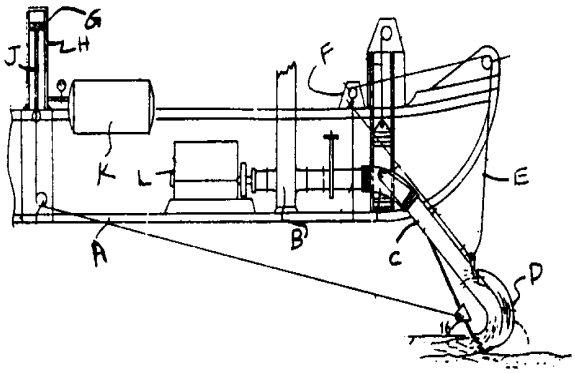

A - Vessel; B - Pump; C - Suction pipe; D - Dredge unit; E- Cable; F - Winch; G - Piston; H - Cylinder; Swell compensator;J - Piston rod; K - Pressurized air tank; L - Pump motor

SEE OR SEARCH CLASS:

175, Boring or Penetrating the Earth, subclasses 5+ for related structure in connection with a drilling platform at sea.

212, Traversing Hoists, subclasses 272+ for subject matter having means to prevent or dampen load oscillations.

254, Implements or Apparatus for Applying Pushing or Pulling Force, subclass 277 for apparatus for hauling or hoisting a load, including a driven device which contacts and pulls on a cable and includes fluid or resilient shock absorbing means or tension maintaining means attached to the cable supporting structure; subclass 392 for apparatus for contacting and guiding a moving cable wherein the cable contacting wheel element has fluid, shock absorbing or tension restoring mechanism connected thereto; subclass 900 for a cable pulling drum having a wave motion responsive actuator.

405, Hydraulic and Earth Engineering, subclasses 195.1+ for a buoyancy compensator on a marine platform.

311 Suction relief valve:

This subclass is indented under subclass 309. Apparatus wherein pressure or force in a dredge pipe is maintained within predetermined limits by operation of a membranous structure which restores the pressure or force back to normal operating conditions by elimination of an obstruction from the pipe.

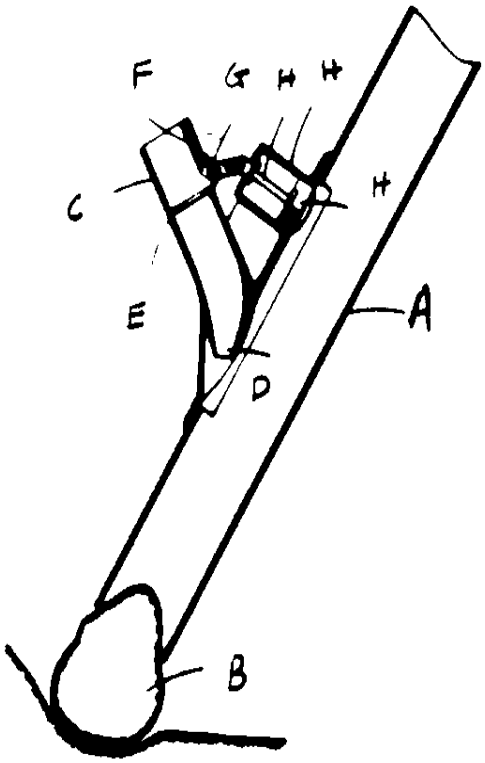

A - Suction pipe; B - Obstruction (e.g., mud ball, stone); C- Tubular passage; D - Nozzle; E - Valve seat; F - Pivoted flapvalve; G - Pivot; H - Valve control means

(1) Note. Usually the function of the relief valve is to relieve excessive vacuum in the suction pipe resulting from plugging of the intake end with the material and to correct velocity drop in the discharge pipe resulting from overloading with the material.

(2) Note. The valve eliminates suction-slugging caused by caving banks, sudden changes of material, or pockets of gas.

(3) Note. When triggered by an abnormal pumping condition, the cable will remain open, admitting water in an amount required to maintain velocity. When the abnormal condition no longer exists, the valve closes slowly, at a rate depending upon the recovery characteristics of the pump.

SEE OR SEARCH CLASS:

137, Fluid Handling, subclasses 455+ for subject matter wherein a valve is controlled in response to a change in the fluid condition.

406, Conveyors: Fluid Current, subclasses 29+ for regulating the introduction of the load through the inlet of the fluid current conveyor.

417, Pumps, subclasses 307+ for a pressure responsive relief valve used for controlling pumped fluid.

312 Control of swing or swing speed:

This subclass is indented under subclass 309. Apparatus including means to automatically regulate the cyclical lateral movement of the dredger suction pipe or of the vessel which carries the dredger.

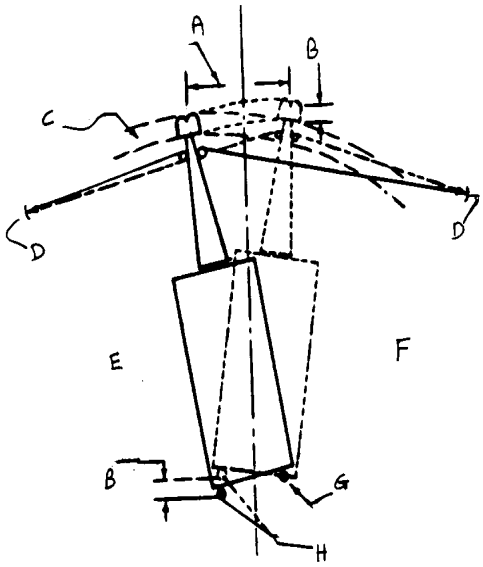

A - Walking swing; B - Advance; C - Cut; D - Anchors; E- Port; F - Starboard; G - Walking spud lowered; H - Digging spudraised

(1) Note. This subclass includes subject matter in which the automatic control system varies the speed of the swing motors (responsive to the pressure in the fluid circuit driving the cutterhead or to the fluid pressure in the dredge pump), and consequently the swinging movement of the ladder, in order to maintain a constant load upon the cutterhead or to the fluid pressure in the dredge pump.

(2) Note. In actual operation, a dredge swings from side to side, using the port spud as a pivot. The action of the dredge

is controlled by swing cables attached to swing anchors. To advance, after the swing of the dredge has stopped, the starboard spud is dropped as the port spud is raised.

313 By use of submarine or undersea vessel:
This subclass is indented under subclass 307. Apparatus especially adapted for sea floor operation wherein the excavating is controlled in whole or part from a submerged, hollow, usually cylindrical receptacle of watertight construction made of a buoyancy material, manned or unmanned, which is either adapted to be propelled through the water or travel along or rest on the sea floor.

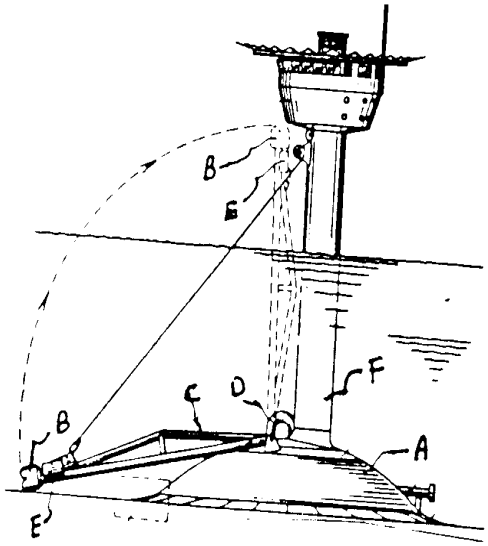

A - Underwater body; B - Cutterhead; C - Cutter ladder; D- Suction tube; E - Cutter motor; F - Shaft connecting underwaterbody to atmosphere

SEE OR SEARCH THIS CLASS, SUBCLASS:
195, for a dredging process.

SEE OR SEARCH CLASS:
114, Ships, subclass 55 for means to remove sand or mud from a submerged hull; subclasses 312+ for an underwater habitat which is not permanently secured to the marine floor or an independently propelled submersible vessel.

405, Hydraulic and Earth Engineering, subclasses 8+ for a pressurized caisson; subclass 154.1 for subterranean or submarine pipe or cable laying, retrieving, manipulating, or treating; subclasses 185+ for submersible means which is remotely controlled by personnel at the water surface or is operated or occupied by a diver for underwater manipulation; and subclasses 205+ for a device having ballasting means to be sunk or positioned at site.

314 Adapted to excavate specific discrete material:
This subclass is indented under subclass 307. Apparatus especially adapted for recovering deep-ocean minerals or other distinct material (e.g., manganese nodules, gold, iron ore).

SEE OR SEARCH CLASS:
299, Mining or In Situ Disintegration of Hard Material, subclass 9 for separation of materials mined or excavated under water.

315 Shellfish:
This subclass is indented under subclass 314. Apparatus especially adapted for recovering aquatic animals, such as an oyster, a clam, or a mussel, whose external covering comprises a pivoted shell.

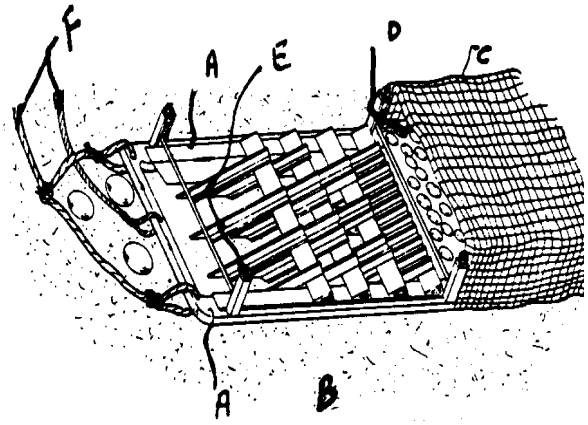

A - Rake or runners; B - Ocean floor; C - Bag or cage;D - Shellfish; E - Rake teeth or tines; F - Tow lines to ship

SEE OR SEARCH CLASS:

43, Fishing, Trapping, and Vermin Destroying, subclass 6.5 for means to catch or gather fish and convey the catch to a boat; subclasses 7+ for a net designed and used for capturing fish or other aquatic animals; subclasses 100+ for a fish trap especially adapted for aquatic use to catch fish.

171, Unearthing Plants or Buried Objects, subclass 62 for an extractor with a digger or root cutter; subclasses 84+ for a separating digger comprised of vertically disposed digger elements arranged in a generally rakelike formation which comb through the soil to remove buried objects; subclasses 111+ for means to excavate a mass of earth having plant roots or other objects.

316 Including rake or scoop structure:

This subclass is indented under subclass 315. Apparatus including a wire mesh basket, net, or similar implement having a row of spaced, curved teeth or a cagelike device, closed at top, bottom, and sides, used to collect the aquatic animals.

317 Suction:

This subclass is indented under subclass 307. Apparatus wherein the material is removed from the bottom of a body of water by a flexible, noncollapsible pipe, provided at its lower end with a weighted nozzle having means (e.g., suction pump) for creating a pressure less than the surrounding environment for entrainment of the material into the pipe.

SEE OR SEARCH CLASS:

406, Conveyors: Fluid Current, subclasses 151+ for subject matter wherein the load is drawn into the conveyor by a vacuum at the inlet by forcing or withdrawing conveying fluid into or from the fluid flow path at a point subsequent to the inlet.

417, Pumps, subclasses 65+ for subject matter wherein one fluid is pumped by contact or entrainment with another.

318 Having intake screen:

This subclass is indented under subclass 317. Apparatus including a grid made of materials such as wire cloth, grate bars, or perforated material being adapted to allow only dredged material of a predetermined size to enter the suction device.

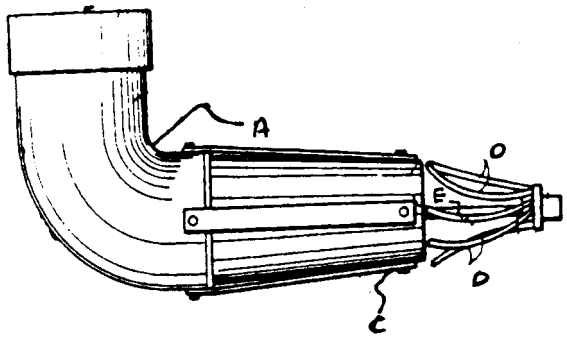

A - Suction pipe; B - Discharge end; C - Inlet end; D,E - Screen rods

SEE OR SEARCH CLASS:

209, Classifying, Separating, and Assorting Solids, subclasses 233+ for a sifter for separating solids.

319 And material size reducer (e.g., crusher):

This subclass is indented under subclass 318. Apparatus including means, other than a digging element, for breaking large objects into smaller pieces.

SEE OR SEARCH CLASS:

241, Solid Material Comminution or Disintegration, for a comminuting apparatus, generally.

299, Mining or In Situ Disintegration of Hard Material, subclasses 29+ for hard material disintegrating means peculiar to mining.

320 With pumping chamber:

This subclass is indented under subclass 317. Apparatus including an enclosure intermediate to the suction inlet and outlet adapted for controlling the flow of the motive fluid and dredged material.

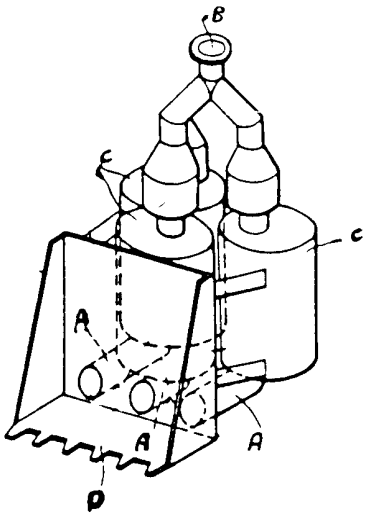

A - Suction inlet pipes; B - Discharge end; C - Pumping chambers;D - Digging tool or cutter

(1) Note. The dredged material is initially drawn into the enclosure by suction and is subsequently forced out of the enclosure for disposal.

SEE OR SEARCH CLASS:

417, Pumps, subclasses 118+ for the pumping of liquid by supplying or exhausting the gaseous motive fluid to or from the pumping chamber.

321 With means to introduce lift agent directly into suction pipe:

This subclass is indented under subclass 317. Apparatus wherein the suction of the dredged material is enhanced by adding a fluid or buoyant substance to the dredged material at or near the suction inlet.

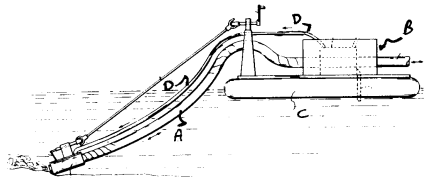

A - Suction pipe; B - Dredge; C - Barge; D - High-pressurelift agent

(1) Note. The dredged material is drawn toward the surface of the water body by direct contact or entrainment with another fluid to create second stage or secondary acceleration of the dredged material.

SEE OR SEARCH CLASS:

175, Boring or Penetrating the Earth, subclasses 5+ for means to bore a submerged formation; subclasses 65+ for process of boring with fluid.

406, Conveyors: Fluid Current, subclasses 93+ for means to introduce booster fluid into conveyors.

417, Pumps, subclasses 118+ wherein the liquid is pumped by supplying gaseous motive fluid to the pumping chamber.

322 With downstream directed jet nozzle:

This subclass is indented under subclass 321. Apparatus wherein a high-velocity fluid stream is forced under pressure out of an opening and is brought into contact with the dredged material to impart energy to the dredged material by the action of entrainment and frictional contact of the fluid.

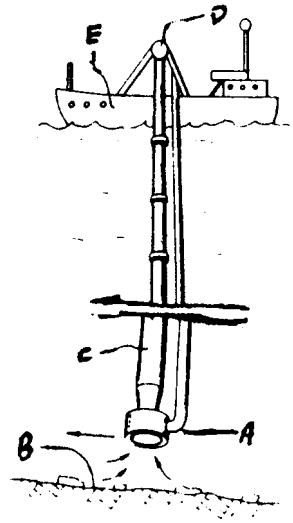

A - Nozzle; B - Material to be dredged; C - Suction pipe;D - Derrick; E - Dredger

SEE OR SEARCH CLASS:

137, Fluid Handling, subclasses 602+ for systems having multiple inlets and a single outlet with mixing, diffusing, or injecting means.

406, Conveyors: Fluid Current, subclasses 93+ for apparatus having means to introduce booster fluid into conveyor; subclasses 151+ for subject matter wherein the load is drawn into the conveyor by creating a vacuum at the inlet by forcing or withdrawing conveying fluid into or from the fluid flow path at a point subsequent to the inlet.

417, Pumps, subclasses 151+ for subject matter in which motive and pumped fluids are brought into intimate contact in an enclosed flow path, the motive fluid having a higher velocity than the pumped fluid and imparting energy to the pumped fluid by the action of entrainment and frictional contact.

323 With fluid jet digger adjacent suction inlet:

This subclass is indented under subclass 317. Apparatus including a device for emitting a high-velocity gas or liquid stream for loosening, disintegrating, and eroding material surrounding the suction pipe to facilitate removal by suction.

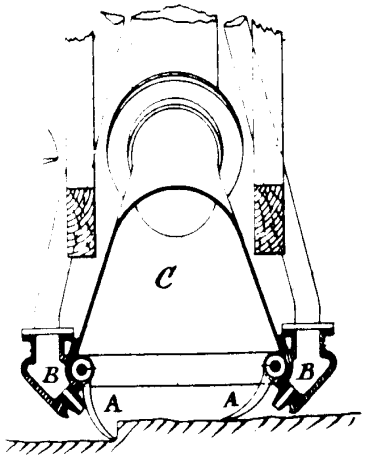

A - Digging teeth; B - Fluid jet digger; C - Suction head

SEE OR SEARCH CLASS:

175, Boring or Penetrating the Earth, subclass 67 for method of using a stream of pressurized fluid to dislodge the earth formation.

299, Mining or In Situ Disintegration of Hard Material, subclasses 16+ for process wherein a source of fluid at above atmospheric pressure is applied directly to material to mine or disintegrate the material.

405, Hydraulic and Earth Engineering, subclass 163 for subject matter relating to bottom fluidizing means wherein an initially relatively firm bottom material which supports the pre-positioned string or conduit is caused to assume a flowable state.

324 Including driven digger adjacent suction inlet (e.g., cutterhead dredger):

This subclass is indented under subclass 317. Apparatus including cutting or breaking means operatively connected adjacent the suction pipe or conduit for excavating material which is to be drawn into the suction pipe or conduit.

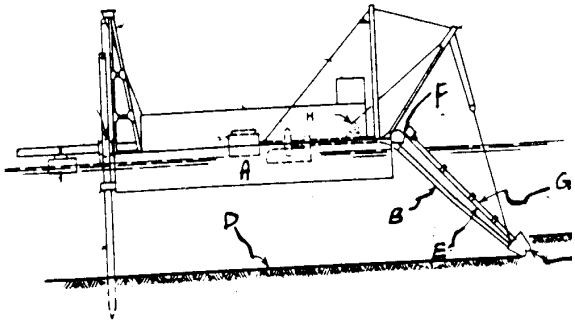

A - Hull; B - Suction pipe; C - Cutter; D - Dredged surface;E. - Ladder; F - Cutter motor; G - Cutter shaft;

SEE OR SEARCH THIS CLASS, SUBCLASS:

319, for material size reducer (e.g., crusher).

SEE OR SEARCH CLASS:

299, Mining or In Situ Disintegration of Hard Material, subclasses 7+ for excavating under water combined with separating materials under water.

325 With specific bearing, or means to lubricate or seal:

This subclass is indented under subclass 324. Apparatus combined with means related to a digging element in which a journal, gudgeon, pivot, pin, or other part revolves, oscillates, or slides or to a substance used to reduce friction between moving parts or to a device or system to create a nonleaking union between rotating elements (e.g., pump shafts).

326 Rotary:

This subclass is indented under subclass 324. Apparatus wherein the means for excavating moves in a circular orbit about a single axis.

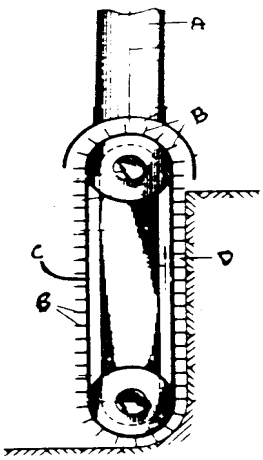

A - Suction pipe; B - Cutter element; C - Endless chain orbelt; D - Soil wall

SEE OR SEARCH THIS CLASS, SUBCLASS:

189+, for a rotary digger generally.

SEE OR SEARCH CLASS:

15, Brushing, Scrubbing, and General Cleaning, subclasses 383+ for a rotary agitator.

172, Earth Working, subclasses 518+ for apparatus having an earth working tool which has a rotational motion in use.

327 Specific cutterhead structure:

This subclass is indented under subclass 326. Apparatus further including particular recitation of a discrete digger or an attachment on a digging edge or surface of such digger.

328 Including distinct tooth or tooth mounting:

This subclass is indented under subclass 327. Apparatus including particular recitation of a digging or cutting tip or an assembly means for a cutting or digging tip.

SEE OR SEARCH THIS CLASS, SUBCLASS:

446+, for specific digging edge or mounting structure used on a scoop.

SEE OR SEARCH CLASS:

299, Mining or In Situ Disintegration of Hard Material, subclass 101 for a particular tooth structure; subclasses 106+ for a particular tooth mounting of that class.

403, Joints and Connections, for a tooth mounting or adaptor structure.

329 Axis transverse with respect to suction pipe:

This subclass is indented under subclass 326. Apparatus in which the cutting or digging element turns about an axis that is substantially perpendicular to the longitudinal axis of the suction inlet.

SEE OR SEARCH THIS CLASS, SUBCLASS:

94+, for a ditcher having a wheel excavator with a transverse axis.

SEE OR SEARCH CLASS:

172, Earth Working, subclass 177 for a rolling tool having circumferentially spaced blades; subclasses 548+ for a tooth or blade unit on a single axle.

241, Solid Material Comminution or Disintegration, subclasses 277+ for a rotating comminuting surface.

299, Mining or In Situ Disintegration of Hard Material, subclasses 39.1+ for a hard material disintegrating machine having rotary cutter.

330 Axis vertical with respect to surface of body of water:
This subclass is indented under subclass 326. Apparatus in which the axis about which the excavating element rotates is substantially perpendicular to the free water surface.

SEE OR SEARCH CLASS:
175, Boring or Penetrating the Earth, subclass 6 for boring a submerged formation with an underwater tool drive; subclass 107 for a rotary-type below ground tool drive.

331 Axis longitudinal with respect to suction pipe:
This subclass is indented under subclass 326. Apparatus in which the cutting or digging element turns about an axis that is parallel to the axis of the suction inlet.

332 Endless:
This subclass is indented under subclass 324. Apparatus wherein the cutting or breaking device is in the form of a series of elements connected to one another in a continuous loop travelling about two or more pulleys, sprockets, or drums.

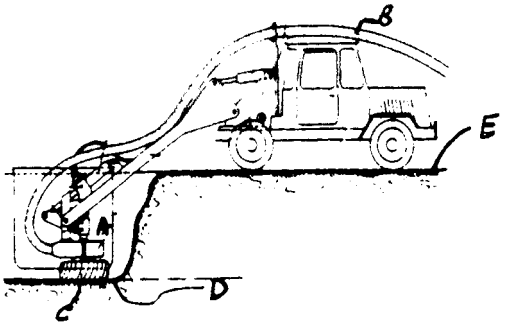

A - Pump; B - Suction discharge pipe; C - Cutter or cuttingtool; D - Sea bed; E - Surface of body of water

SEE OR SEARCH CLASS:
198, Conveyors: Power-Driven, subclasses 506+ for a conveyor having means specialized for collecting a load from the ground.

333 Draghead dredger (e.g., dustpan dredger):
This subclass is indented under subclass 317. Apparatus wherein the mouth of the suction pipe comprises a plain pipe cut at an angle or a mouthpiece in the shape of a hook being adapted to be dragged along the bottom as the pipe is pulled along by the dredger travelling through the water.

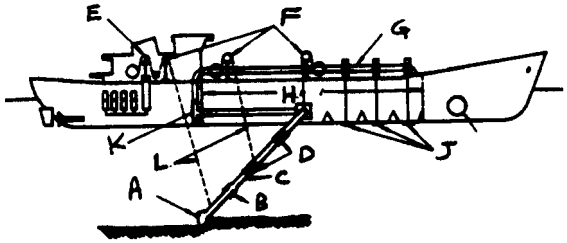

A - Drag head; B - Universal joint; C - Suction pipe; D-Couplings; E - Swell compensator; F - Hoist gantries; G - Dischargepipes; H - Hopper; J - Hopper doors; K - Pump; L - Hoist wires

(1) Note. The material is literally sucked into a nozzle, much the same way as in a vacuum cleaner, and then is transferred to the vertical means rising to the surface.

334 With pipe suspension or support (e.g., ladder structure):
This subclass is indented under subclass 317. Apparatus including means formed of structural steel or similar material having side beams, cross beams, and braces to maintain the suction pipe or conduit in a controlled and stable position relative to the dredger structure from which the pipe or conduit extends or to some other predetermined datum.

(1) Note. The suction pipe for dislodging earth from a bank is carried upon a radial arm commonly known as a ladder which includes means for strengthening or protecting the suction pipe whereby the entire length of the pipe is braced and means for connecting the pipe protector to the dredger structure so that the pipe and its protector may swing in unison.

SEE OR SEARCH CLASS:

248, Supports, subclasses 49+ for a pipe or cable support generally.

335 Pipe or nozzle structure:

This subclass is indented under subclass 317. Apparatus wherein the significance is attributed to a particular shape of the conduit which carries the dredged material or of the inlet.

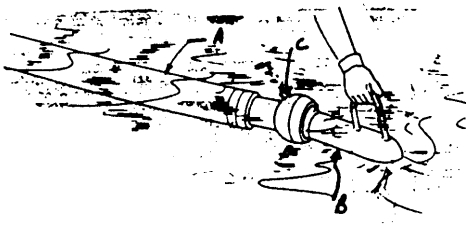

A - Suction pipe; B - Suction nozzle; C - Pipe coupling

SEE OR SEARCH CLASS:

15, Brushing, Scrubbing, and General Cleaning, subclasses 300.1+ for a device constructed and arranged particularly for applying suction to a work piece.

138, Pipes and Tubular Conduits, subclasses 118+ for a flexible pipe conduit.

406, Conveyors: Fluid Current, subclass 152 for a specific intake nozzle structure upstream of the suction source; subclasses 191+ for pipe, duct, or channel for guiding the load.

336 With coupling (e.g., connector):

This subclass is indented under subclass 335. Apparatus including particular feature of the joint between separate sections of suction pipe or conduit or between suction pipe and nozzle.

SEE OR SEARCH CLASS:

137, Fluid Handling, subclasses 615+ for subject matter including spout, nozzle, or similar fluid flow conduit having two or more sections jointed for relative angular movement in one or more planes.

138, Pipes and Tubular Conduits, subclasses 118+ for means to join various flexible pipe or conduit sections.

285, Pipe Joints or Couplings, for means to join sections of pipes or conduits.

337 Rotary digger (e.g., bucket wheel):

This subclass is indented under subclass 307. Apparatus in which the digging element is arranged on the circumference of a circular frame which rotates about an axis.

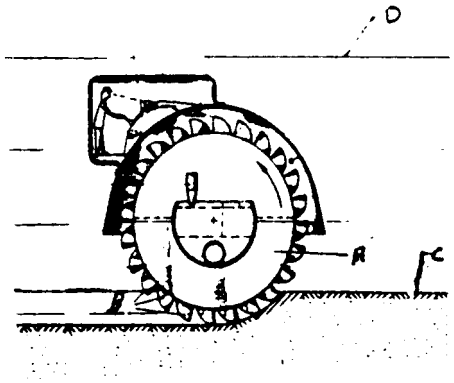

A - Rotary wheel; B - Digging buckets; C - Soil; D - Surfaceof the body of water

SEE OR SEARCH THIS CLASS, SUBCLASS:

189+, for a rotary digger.

SEE OR SEARCH CLASS:

414, Material or Article Handling, subclasses 140.9+ for handling of bulk material.

338 Endless:

This subclass is indented under subclass 307. Apparatus in which the dredger includes a continuous conveying belt with a plurality of digging elements to hold or feed the dredged material.

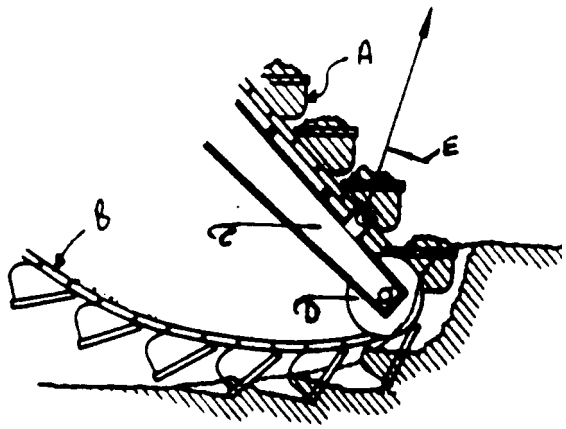

A - Bucket; B - Endless bucket chain; C - Ladder; D - Pulleywheel; E - Ladder hoist wire

SEE OR SEARCH THIS CLASS, SUBCLASS:

327, for a suction dredger having digging elements on an endless belt.

353+, for a ditcher with an endless bucket.

SEE OR SEARCH CLASS:

198, Conveyors: Power-Driven, subclasses 701+ for subject matter wherein a load-engaging and conveying part includes a structure in the form of a bucket.

406, Conveyors: Fluid Current, subclasses 77+ for an endless power-driven conveyor.

339 Specific bucket structure:

This subclass is indented under subclass 338. Apparatus wherein the significance is attributed to a particular shape of the cutting element.

SEE OR SEARCH THIS CLASS, SUBCLASS:

465, for a digging element associated with a land-based endless digger.

340 Grab:

This subclass is indented under subclass 307. Apparatus wherein the dredging tool consists of two pivotally cooperating digging elements which are adapted to be dropped in the open position into material to be excavated and then adapted to be closed to thereby encompass the material between the two elements.

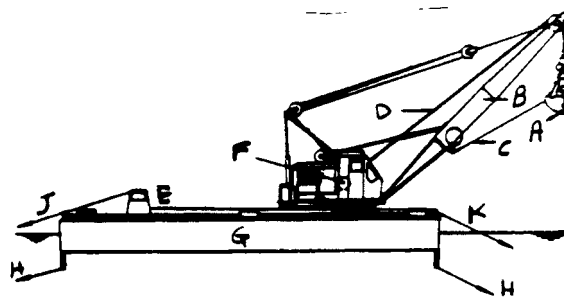

A - Grab bucket; B - Boom; C - Tag line; D - Hoist and holdwires; E - Winch; F - Hoist and hold drums; G - Pontoon; H - Sidewire; J - Aft wire; K - Head wire

SEE OR SEARCH THIS CLASS, SUBCLASS:

461, for a clamshell bucket.

SEE OR SEARCH CLASS:

212, Traversing Hoists, subclasses 81 and 84 for a grab combined with means to swing or shift the grab.

294, Handling: Hand and Hoist-Line Implements, subclasses 86.4+ for a device adapted for grasping a load and having handling and hoist-line terminals.

414, Material or Article Handling, subclasses 618+ wherein the load carrier is a seizing, grasping, or clamping device.

341 Scoop or bucket:

This subclass is indented under subclass 307. Apparatus wherein the dredging tool consists of a ladle or cylindrical container having a bottom, back and side walls and which is capable of digging and holding the material and transporting it to a dump position.

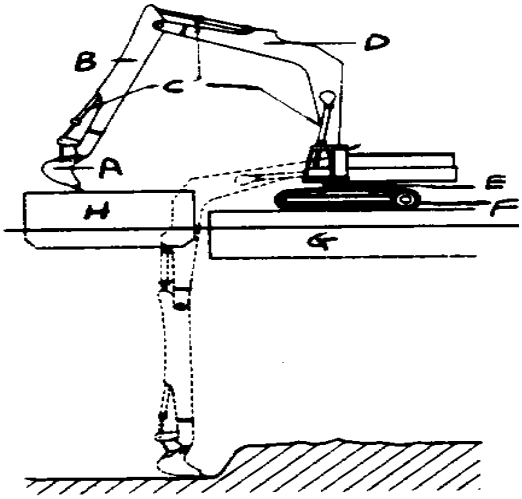

A - Scoop or bucket; B - Boom arm; C - Hydraulic arms;D - Boom; E - Turntable; F - Track; G - Pontoon; H - Dump barge

SEE OR SEARCH THIS CLASS, SUBCLASS:

379+, for a ditcher having a shovel or scoop.

398+, for cable operated excavators with scoop.

444+, for scoop or bucket structure, per se.

SEE OR SEARCH CLASS:

294, Handling: Hand and Hoist-line Implements, subclasses 68.22+ for a bucket-type hoistable receptacle.

414, Material or Article Handling, subclass 565 for a vertically swingable shovel or scoop.

342 With means to scour or scrape (e.g., propeller means, digging teeth, plow):

This subclass is indented under subclass 307. Apparatus including an eroding device such as a propeller means or raking teeth which flushes or rub underwater obstructions such as sandbars or shoals by loosening the sand, mud, or silt at the bottom surface of a body of water.

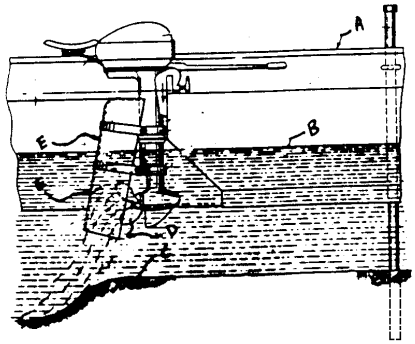

Fig. 1. A - Dredge vessel; B - Body of water; C - Sand bar;D - Propeller; E - Deflector

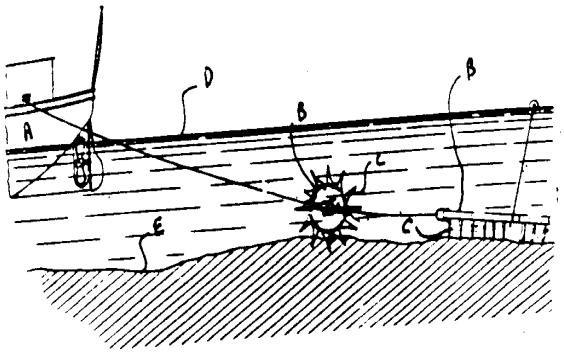

Fig. 2. A - Dredge vessel; B - Digging elements; C - Diggingteeth; D - Body of water; E - Sand bar

SEE OR SEARCH CLASS:

114, Ships, subclass 55 for a vessel raising means including provision for loosening of sand or mud about a submerged hull.

405, Hydraulic and Earth Engineering, subclass 73 for subject matter relating to the removal of a sediment deposit by the concentration of a natural current.

343 Rotary digging element:
This subclass is indented under subclass 342. Apparatus wherein the eroding device moves in a circular path about a central axis.

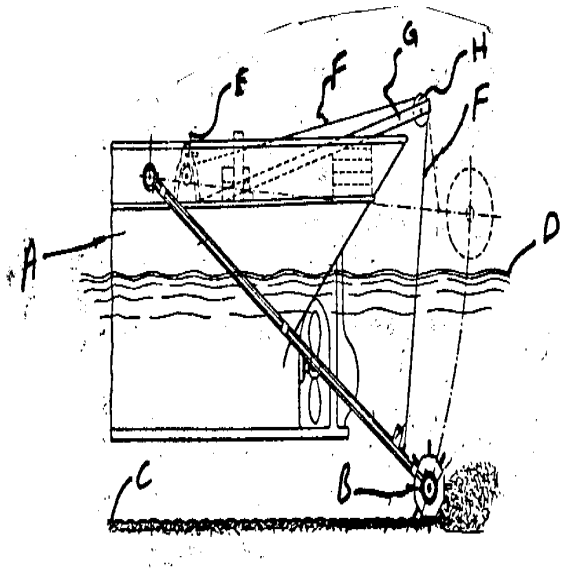

A - Dredger or vessel;B - Rotary digging element; C - Bottomof body of water; D - Body of water; E,F,G,H - Hoisting device

344 Nozzle:
This subclass is indented under subclass 342. Apparatus wherein the removal or cleaning of sand, mud, or silt is effected by the action of high-pressure air or water which is forced through a projecting part with an opening in a localized stream.

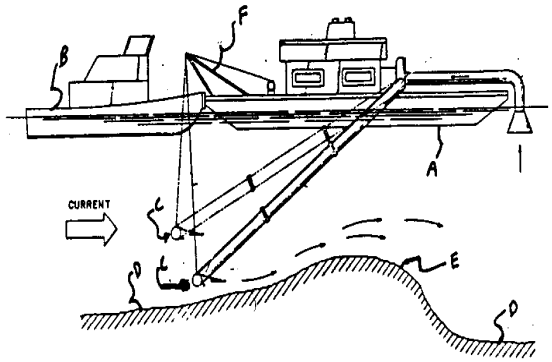

A - Barge; B - Tug boat; C - Fluid jet; D - River or lake bed;E - Sand bar; F - Hoist

SEE OR SEARCH CLASS:
114, Ships, subclass 55 for a vessel raising means including provision for loosening of sand or mud about a submerged hull.
405, Hydraulic and Earth Engineering, subclass 73 for subject matter relating to the removal of a sediment deposit by the concentration of a natural current.

345 With vessel, propulsion, or anchor structure (e.g., bank spud, spud brace):
This subclass is indented under subclass 307. Apparatus wherein the invention is particularly directed toward (a) the feature of the barge, ship, or boat which supports the dredging equipment in the body of water, or (b) the detail of the means which is attached to a barge, ship, or boat to hold it stationary or under controlled movement in the body of water while dredging.

(1) Note. Spud usually consists of (a) one of four sharp pointed vertical posts or piles that can be forced by a tackle or by power through a socket in a floating or a land dredge or scow to anchor it and (b) one of the two foot pieces of the legs of the A-frame of a floating dredge that are set in the banks of the body of water to steady the dredge and give it support.

SEE OR SEARCH CLASS:
114, Ships, subclass 256 for a floating or semisubmersible storage vessel; subclasses 293 and 294+ for an anchor or an anchoring arrangement.

346 Bottom spud anchor:
This subclass is indented under subclass 345. Apparatus including an elongated member which extends from the vessel to the bottom of the body of water to hold the dredger stationary or move it in a controlled manner.

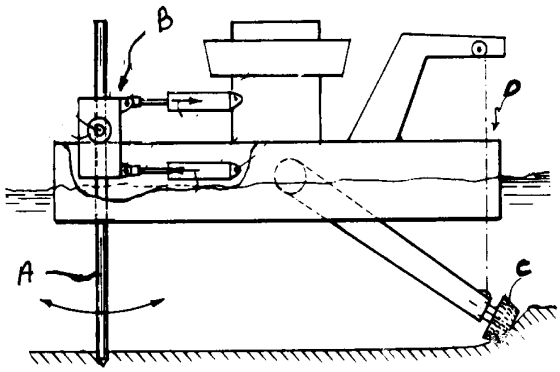

A - Spud; B - Spud control system; C - Cutter; D - Dredger

SEE OR SEARCH CLASS:

114, Ships, subclasses 293 and 294+ for an anchor or an anchoring arrangement.

175, Boring or Penetrating the Earth, subclasses 5+ for boring a submerged formation, especially subclass 10 for using a submersible guide means engaging the marine floor.

347 DITCHER:

This subclass is indented under the class definition. Apparatus including means to penetrate the ground for digging a long narrow trench in the surface of the ground.

SEE OR SEARCH THIS CLASS, SUBCLASS:

307+, for a device for forming an underwater trench.

381+, for a device for working on forming a road.

446+, for a detailed digging edge.

SEE OR SEARCH CLASS:

175, Boring or Penetrating the Earth, subclasses 19+ for boring successive, parallel, or overlapping holes vertically in the earth to ultimately form a trench.

299, Mining or In Situ Disintegration of Hard Material, subclasses 24+ and 29+ for trenching in hard material such as rock or ice.

405, Hydraulic and Earth Engineering, subclass 154.1 for trenching in combination with subterranean or submarine pipe or cable laying, retrieving, manipulating, or treating; and subclasses 282+ for trench shoring.

348 Condition responsive:

This subclass is indented under subclass 347. Apparatus having means to activate ditching or trenching means into digging condition by the control of a pre-established sequencing means such as a template, cam, electromagnetic tape, etc., responsive to a condition which may or may not exist.

SEE OR SEARCH THIS CLASS, SUBCLASS:

381, for a condition responsive excavator used for forming roadways.

414+, for a condition responsive scoop or excavating and transporting container.

SEE OR SEARCH CLASS:

172, Earth Working, subclasses 2+ for an earth working implement with automatic power control.

175, Boring or Penetrating the Earth, subclasses 24+ for a process or apparatus including step or means for sensing a condition of operation and controlling a power operated means in response to said sensed condition.

414, Material or Article Handling, subclasses 699+ for control means responsive to sensed condition for a shovel or fork-type vertically swinging load support.

701, Data Processing: Vehicles, Navigation, and Relative Location, subclass 50 for vehicle guidance, operation, or indication of a construction or agricultural vehicle.

349 With crumber:

This subclass is indented under subclass 347. Apparatus combined with a blade or a shoe adapted to follow an endless conveyor for the purpose of dressing or removing irregularities from the bottom of the trench.

(1) Note. The function of the crumbing blade or crumber is to catch loose earth which may be removed or dropped by the excavator and to collect, carry, gather, and push forward such loose earth so that it may be taken up by the excavator at the lowest point of travel.

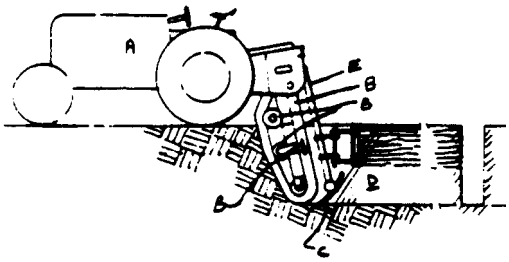

A - Vehicle; B - Digger assembly; C - Crumber; D - Trench;E - Boom

350 Having screw digger:
This subclass is indented under subclass 347. Apparatus including a trenching tool of the auger type with a helical surface rotated about a longitudinal axis.

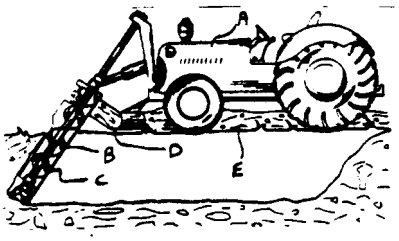

A - Tractor or excavator; B - Cutter element; C - Spiral orscrew digging element; D - Discharge pipe; E - Ditched material

SEE OR SEARCH CLASS:
198, Conveyors: Power-Driven, subclasses 624+ for a rotating conveyor section having a load engaging portion in the form of a helical surface.

351 With conveyor:
This subclass is indented under subclass 350. Apparatus including a carrier to remove the material cut by the auger.

352 Having endless digger:
This subclass is indented under subclass 347. Apparatus wherein the cutting or breaking device is in the form of a series of elements connected to one another in a continuous loop travelling about two or more pulleys, sprockets, or drums.

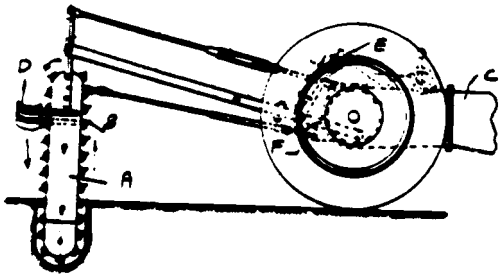

A - Digging frame; B - Digging blades; C - Vehicle connection;D - Dirt chute; E - Vehicle hydraulic lift; F - Power takeoff shaft

SEE OR SEARCH THIS CLASS, SUBCLASS:
464, for a miscellaneous endless digger or details thereof.

353 Endless bucket:
This subclass is indented under subclass 352. Apparatus wherein the cutting or breaking device is in the form of a series of elements connected to one another in a continuous loop to hold and feed the excavated material.

SEE OR SEARCH THIS CLASS, SUBCLASS:
326+, for miscellaneous endless digger or details thereof.
338+, for an endless digger used in dredging.

SEE OR SEARCH CLASS:
198, Conveyors: Power-Driven, subclass 509 for a conveyor section having buckets specialized to gather load batches; subclasses 703+ for a conveyor section having means to facilitate loading or discharging load from the bucket.

354 Transverse cut:
This subclass is indented under subclass 353. Apparatus wherein the endless bucket rotates perpendicular to the direction in which the trench is being formed.

SEE OR SEARCH CLASS:
198, Conveyors: Power-Driven, subclass 307.1 for a bucket conveyor.

355 Longitudinal cut:
This subclass is indented under subclass 353. Apparatus wherein the endless bucket rotates parallel to the direction in which the trench is being formed.

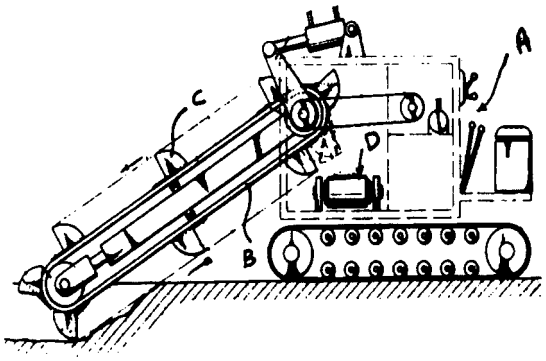

A - Crawler or excavator; B - Endless chain belt; C - Diggingbucket; D - Conveyor

SEE OR SEARCH CLASS:
198, Conveyors: Power-Driven, subclasses 318+ for conveying apparatus having a vertically swingable conveyor.

356 With side cutters:
This subclass is indented under subclass 355. Apparatus combined with means for further trimming the trench by removing material on the side faces of the trench.

(1) Note. The side cutters usually include shearing bars, slice blades, reamers, or wheel-like cutters.

357 With distinct rotary digger:
This subclass is indented under subclass 355. Apparatus combined with a supplementary excavating mechanism (e.g., a rotary cutting disc, a rotary cutting knife, a rotary cutting pick) operating in unison with the chain to widen the trench dug by the excavator.

358 Reciprocating endless digger:
This subclass is indented under subclass 355. Apparatus wherein the endless excavator or an excavating device associated therewith (e.g., spade, plow, pick, scraper) is adapted to move back and forth to excavate the material.

359 With longitudinal endless conveyor:
This subclass is indented under subclass 355. Apparatus combined with an orbiting continuous carrier extending parallel to the trench which receives material excavated from the trench.

360 With transverse endless conveyor:
This subclass is indented under subclass 355. Apparatus including an orbiting continuous carrier extending perpendicular to the trench which receives material excavated from the trench.

SEE OR SEARCH CLASS:
198, Conveyors: Power-Driven, subclasses 818+ for an endless conveyor having upwardly facing trough configuration in transverse direction on conveying reach.

361 Drive-related feature:
This subclass is indented under subclass 360. Apparatus wherein the significance is attributed to the motion transmitting mechanism of the endless conveyor (e.g., sprocket, chain).

SEE OR SEARCH THIS CLASS, SUBCLASS:
362, for a drive-related feature of ditcher with longitudinal cut.
423, for a drive-related feature of endless load distributor of scoop or excavating and transporting container.

362 Drive-related feature:
This subclass is indented under subclass 355. Apparatus wherein the significance is attributed to motion transmitting mechanism of the endless digging bucket (e.g., sprocket, chain, mounting).

SEE OR SEARCH THIS CLASS, SUBCLASS:
361, for a drive-related feature of a transverse endless conveyor.
423, for a drive-related feature of an endless load distributor of scoop or excavating and transporting container.

363 Hand operated:
This subclass is indented under subclass 355. Apparatus including a compact trencher capable of being maneuvered or guided by a human being and adapted to operate in a confined and restricted area.

364 With side or auxiliary cutter:
This subclass is indented under subclass 347. Apparatus combined with means for widening the trench by removing material on the side faces of the trench.

(1) Note. The cutter acts as a trimmer, evener, or smoother for sidewalk of a ditch, irrigation canal, drain ditch, trench, stream, or canal for the removal of sod, weeds, vegetation upon the wall, or other debris.

(2) Note. The side or auxiliary cutter usually includes shearing bar, slice blade, reamer, or wheel-like cutter member.

SEE OR SEARCH CLASS:
172, Earth Working, subclasses 329+ for an earth working element having a manipulating and supporting handle and an implement having a handle wherein the device is guided or propelled by a working attendant.
180, Motor Vehicles, subclasses 19.1+ for a vehicle having steering means adapted to be actuated by an attendant who walks with the vehicle.

365 Rotary:
This subclass is indented under subclass 364. Apparatus wherein the additional or auxiliary cutter moves in a circular orbit about an axis.

SEE OR SEARCH CLASS:
299, Mining or In Situ Disintegration of Hard Material, subclasses 39.1+ for a hard material disintegrating machine having rotary cutter.

366 Plow:
This subclass is indented under subclass 347. Apparatus including a V-shaped or diagonally oriented blade used for penetrating the ground to form a trench.

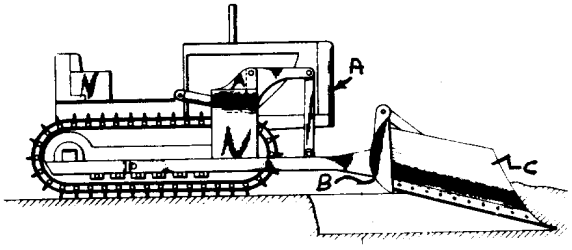

A - Vehicle; B,C - Plow blade assembly

SEE OR SEARCH THIS CLASS, SUBCLASS:
389+, for a road grader-type plow.

SEE OR SEARCH CLASS:
172, Earth Working, appropriate subclasses, especially subclasses 721+ for apparatus in which earth working implement is symmetrically arranged with respect to the line of draft; subclasses 754+ for apparatus in which the tool is of the type having a landslide to receive the side pressure of the earth working element and to act as a runner, a point for making an initial cut in the earth, a shave to cut a slice of earth, and a moldboard to guide the furrow slice.
405, Hydraulic and Earth Engineering, subclasses 180+ wherein the means for placing the string or conduit below the surface includes a plowlike digging tool for forming a trench.

367 Slit ditcher:
This subclass is indented under subclass 366. Apparatus in which the plow is a narrow, elongated blade which forms a long, narrow trench embanked with its own soil or which cuts the bottom and sides of the trench, thereby forcing the dirt up.

(1) Note. Slit ditcher is especially adapted for stripping the earth from a pipeline which is buried therein, or for opening a ditch for laying drainage tubes, cable ducts, drainage tiles, or water supply piping.

SEE OR SEARCH THIS CLASS, SUBCLASS:

380, for slit ditcher having shovel or scoop rather than a plow.

SEE OR SEARCH CLASS:

172, Earth Working, subclasses 699+ for an earth working implement specifically disclosed as working deep in the soil.

405, Hydraulic and Earth Engineering, subclass 154.1 for a slit trencher in combination with a pipe or cable laying or retrieving structure.

368 Including longitudinal endless conveyor:

This subclass is indented under subclass 367. Apparatus including an orbitally travelling continuous carrier extending parallel to the trench, positional to receive the loosened earth from the trench.

SEE OR SEARCH THIS CLASS, SUBCLASS:

375, for a plow having a longitudinal endless conveyor.

SEE OR SEARCH CLASS:

172, Earth Working, subclass 33 for a power-driven conveyor or handler.

198, Conveyors: Power-Driven, subclasses 510.1+ for a conveyor having power-driven feed means.

405, Hydraulic and Earth Engineering, subclasses 179+ for a pipe or cable laying apparatus having backfill or bedding material conveying or dispensing means.

369 And transverse endless conveyor:

This subclass is indented under subclass 368. Apparatus including an additional orbitally travelling continuous carrier extending perpendicular to the trench to receive loosened earth from the trench.

SEE OR SEARCH THIS CLASS, SUBCLASS:

376+, for a plow with a transverse endless conveyor.

370 Mole plow:

This subclass is indented under subclass 366. Apparatus including a shoe (e.g., conical, pyramidal, wedge shaped) especially adapted for forming a continuous tunnel or small covered passage through the earth.

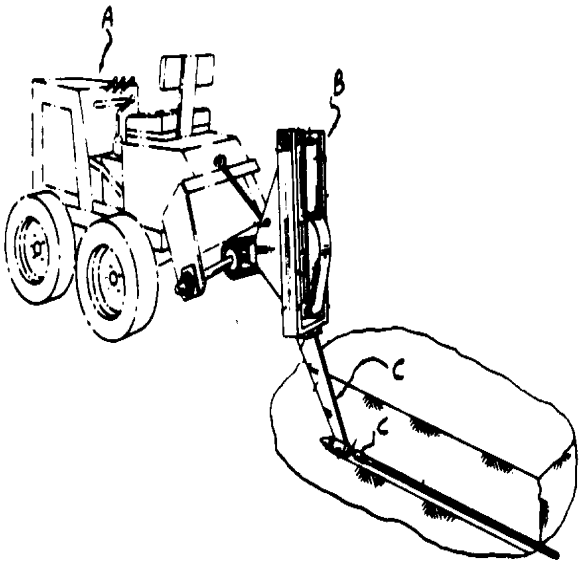

A - Vehicle; B - Plow support; C - Mole plow assembly

(1) Note. Included herein is a device for forming a subterranean passage for draining purposes. Its action upon the earth in forming a passage is such as to densely compress the sides and top of the passage.

SEE OR SEARCH CLASS:

111, Planting, subclass 123 for a chisel opener or furrow opener used for liquid or gas soil treatment.

172, Earth Working, subclasses 699+ for an earth working implement specifically disclosed as working deep in the soil.

405, Hydraulic and Earth Engineering, subclasses 180+ wherein the apparatus for placing the string or conduit below the surface includes a plowlike digging tool for forming a trench.

372 With plow supported wheel or supported on wheel frame:
This subclass is indented under subclass 366. Apparatus wherein the plow is combined with a solid circular disk or a rigid circular ring connected by spokes to a hub, designed to turn around an axle passed through the center mounted on a trencher frame to carry the device.

373 With conveyor:
This subclass is indented under subclass 366. Apparatus including means to carry the earth loosened from the trench.

(1) Note. The conveyor usually consists of a spiral, screw, or auger-type carrier or rotary disk with receptacles.

SEE OR SEARCH CLASS:
172, Earth Working, subclass 33 for an earth working means combined with a power-driven means for handling the earth after it has been severed from the ground or loosened by the earth working means.

374 Wheel and belt:
This subclass is indented under subclass 373. Apparatus wherein the means to carry or discharge the earth includes a rotary, circular disk having peripheral side flanges combined with revolving endless track to carry the earth loosened from the trench.

375 Longitudinal endless conveyor:
This subclass is indented under subclass 373. Apparatus wherein the means to carry or discharge the earth includes an orbiting continuous carrier extending parallel to the trench to receive the loosened earth from the trench.

SEE OR SEARCH THIS CLASS, SUBCLASS:
368, for a slit ditcher having a longitudinal endless conveyor.

SEE OR SEARCH CLASS:
172, Earth Working, subclass 33 for a power-driven conveyor or handler.
198, Conveyors: Power-Driven, subclasses 300+ for a conveying apparatus entirely supported by mobile ground engaging means; subclasses 506+ for a conveyor having means specialized for collecting a load from a static ground support.

376 And transverse endless conveyor:
This subclass is indented under subclass 375. Apparatus wherein the means to convey or discharge the earth also includes an additional orbiting continuous carrier extending perpendicular to the trench to further receive and discharge the excavated soil.

SEE OR SEARCH THIS CLASS, SUBCLASS:
369, for a slit ditcher having a transverse endless conveyor.

SEE OR SEARCH CLASS:
198, Conveyors: Power-Driven, subclasses 510.1+ for a conveyor with means to collect a load from the ground including power-driven feed means.

377 With colter:
This subclass is indented under subclass 376. Apparatus combined with a blade adapted to cut a slit in the ground in advance of the plow.

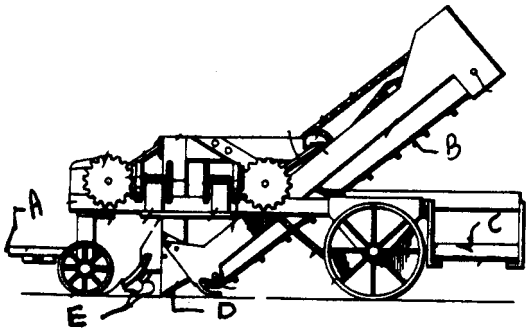

A - Draft connection; B - Longitudinal endless conveyor;C - Transverse endless conveyor; D - Plow; E - Colter

(1) Note. The colter of this subclass may include a fixed blade (i.e., knife) or a rotary disk (i.e., rolling).

SEE OR SEARCH THIS CLASS, SUBCLASS:
378, for a ditcher plow having a colter, generally.

SEE OR SEARCH CLASS:
171, Unearthing Plants or Buried Objects, subclass 3 for an unearthing device with stabilizing colter or fin.
172, Earth Working, subclasses 19+ for a sod cutter including vertical transverse cutting means.

378 With colter:
This subclass is indented under subclass 366. Apparatus combined with a blade or disk adapted to cut a slit in the ground in advance of the plow.

(1) Note. The colter of this subclass may include a fixed blade (i.e., knife) or a rotary disk (i.e., rolling).

SEE OR SEARCH THIS CLASS, SUBCLASS:
377, for a colter.

SEE OR SEARCH CLASS:
171, Unearthing Plants or Buried Objects, subclass 3 for an unearthing device with stabilizing colter or fin.
172, Earth Working, subclasses 165+ for an earth working apparatus having a colter for cutting a vertical slit in the ground in advance of the earth working implement.

379 Shovel or scoop:
This subclass is indented under subclass 347. Apparatus including a hol-lowed-out blade with a concave front surface, convex rear surface, and opposite side edges or a bucket having a bottom, back and side walls used for removing the earth to make a trench.

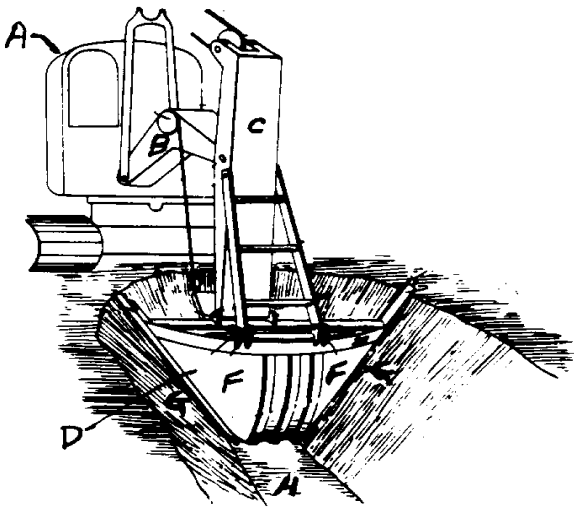

A - Excavator; B - Boom; C - Dipper handle; D - Shovel orscoop; F - Scoop side wall; G - Side ditch cut; H - Bottom ditchcut

SEE OR SEARCH THIS CLASS, SUBCLASS:
443, for a dipper-type excavator.

380 Slit ditcher:
This subclass is indented under subclass 379. Apparatus wherein the shovel or scoop is adapted to form a long, narrow ditch embanked with its own soil which cuts the bottom and sides of the trench, thereby forcing the dirt up.

SEE OR SEARCH THIS CLASS, SUBCLASS:
367+, for a slit ditcher having a plow as a digging blade.

381 ROAD GRADER-TYPE:
This subclass is indented under the class definition. Apparatus including means to penetrate the ground for working on and forming the ground for the passage of vehicles, persons, or animals.

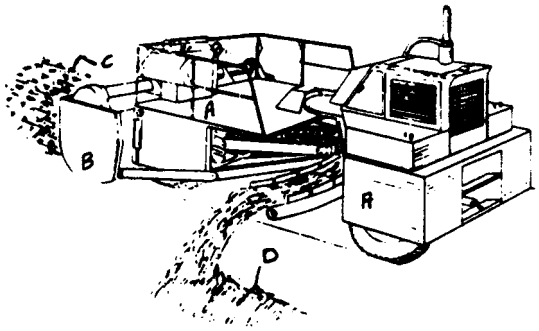

A - Vehicle; B - Digger assembly; C - Roadbed; D - Windrow

SEE OR SEARCH THIS CLASS, SUBCLASS:

309+, for a self-loading vehicle.

347+, for a ditcher.

411+, for a scoop.

SEE OR SEARCH CLASS:

172, Earth Working, subclasses 4.5, 63, 197, 199, 684.5, 779, 780, 781, and 811+ for a drag, scraper, or other leveling tool.

404, Road Structure, Process, or Apparatus, subclass 83 particularly for road building means combined with earth digging, handling, or moving means.

382 Condition responsive:

This subclass is indented under subclass 381. Apparatus having means to activate digging means into digging condition by the control of a pre-established sequencing device.

SEE OR SEARCH THIS CLASS, SUBCLASS:

348, for condition responsive ditching or trenching means.

414+, for a condition responsive scoop or excavating and transporting container.

SEE OR SEARCH CLASS:

172, Earth Working, subclasses 2+ for an earth working implement with automatic power control.

414, Material or Article Handling, subclasses 699+ for control means responsive to a sensed condition for a shovel or fork-type vertically swinging load support.

701, Data Processing: Vehicles, Navigation, and Relative Location, subclass 50 for vehicle guidance, operation, or indication of a construction or agricultural vehicle.

383 Including ground supported, grader guiding rail:

This subclass is indented under subclass 381. Apparatus including a structural steel bar fixed outside the grader itself to create a track for maintaining the grader on a predetermined path of travel.

(1) Note. In the process of grading a road, the surface is usually plowed and the main body of the material removed by the grader scraper. The tracks are then placed in position and the grader is passed over the surface to remove the remaining loose material and to give the roadbed the desired contour. The tracks serve as a gauge for the scraper carried by the road grader as well as maintaining the grader at a predetermined level whereby the proper height and cross section of the roadbed between the forms are established.

SEE OR SEARCH CLASS:

404, Road Structure, Process, or Apparatus, subclass 119 wherein the means to level or smooth previously laid road material is positioned and guided above the roadway by the side forms which also serve as a trackway.

384 Adjustable digger:

This subclass is indented under subclass 383. Apparatus wherein the means for removing or loosening the earth is combined with means for selectively varying the elevational or angular position of the loosening means.

385 Rotary digger:

This subclass is indented under subclass 384. Apparatus wherein means for loosening the earth moves in a circular orbit about an axis.

386 Rotary digger:
This subclass is indented under subclass 381. Apparatus including means for removing or loosening the earth which moves in a circular orbit about an axis.

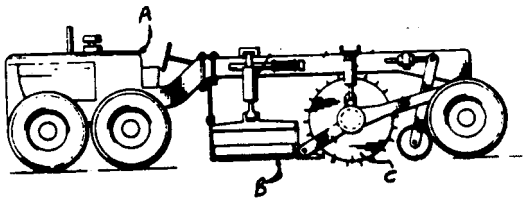

A - Vehicle; B - Material receiving conveyor; C - Rotary digger

SEE OR SEARCH THIS CLASS, SUBCLASS:
189+, for an excavator having a rotary digger.
385, for other road grader-type rotary digger.

SEE OR SEARCH CLASS:
172, Earth Working, subclasses 518+ for a rolling, rotating, or orbitally moving tool.
404, Road Structure, Process, or Apparatus, subclasses 90+ for an earth or a road surface comminuting means; subclass 118 for a bar, beam, or striker means used to level or smooth previously laid road material.

387 Adjustable:
This subclass is indented under subclass 386. Apparatus wherein a means is provided to selectively vary the elevational or angular position of the rotary digger.

388 Transverse endless digger:
This subclass is indented under subclass 381. Apparatus wherein the cutting or breaking device is in the form of a series of elements (e.g., blade, bowl) connected to one another in a continuous loop traveling about two or more pulleys, sprockets, or drums excavating the surface of the road perpendicular to the direction of the road axis.

SEE OR SEARCH CLASS:
198, Conveyors: Power-Driven, subclasses 506+ for a conveyor having means specialized for collecting a load from the ground.

389 Plow with transverse endless conveyor:
This subclass is indented under subclass 381. Apparatus combined with continuous carrier positioned perpendicular to the road for removing earth loosened by a V-shaped or diagonally oriented blade.

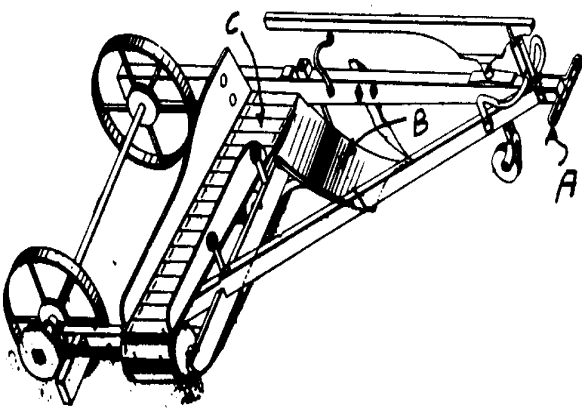

A - Draft connection; B - Plow; C - Endless conveyor

SEE OR SEARCH CLASS:
198, Conveyors: Power-Driven, subclass 308.1 for a conveying apparatus entirely supported by a mobile ground engaging means with a shovel or tine.

390 Disc plow:
This subclass is indented under subclass 389. Apparatus wherein the earth loosening or removing means is a thin, flat, circular plate.

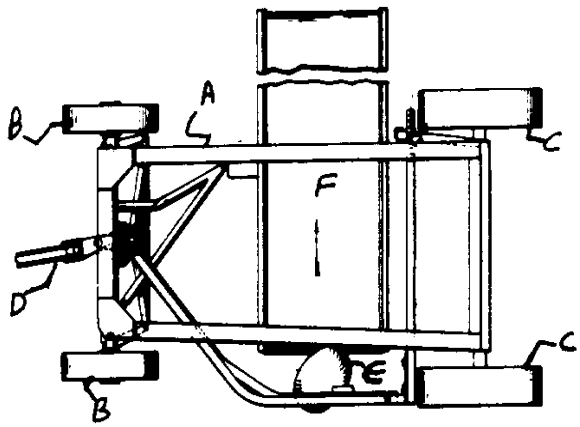

A - Main frame; B - Front wheels; C - Rear wheels; D - Tongueconnection to vehicle; E - Disc plow; F - Transverse endless conveyor

SEE OR SEARCH CLASS:

172, Earth Working, subclass 33 for a power-driven moldboard, conveyor, or handler; subclasses 299+ for an earth working tool forward or rear of a motor vehicle.

198, Conveyors: Power-Driven, subclass 308.1 for a conveying apparatus entirely supported by a mobile ground engaging means with shovel or tine; subclasses 312+ for a conveyor shiftably mounted on a vehicle.

391 Plow with transverse conveyor wheel:

This subclass is indented under subclass 381. Apparatus including a V-shaped or diagonally oriented blade combined with a rotary transporting implement having buckets or receptacles on its periphery and having an axis perpendicular to the direction of travel wherein the transporting implement receives earth from the blade.

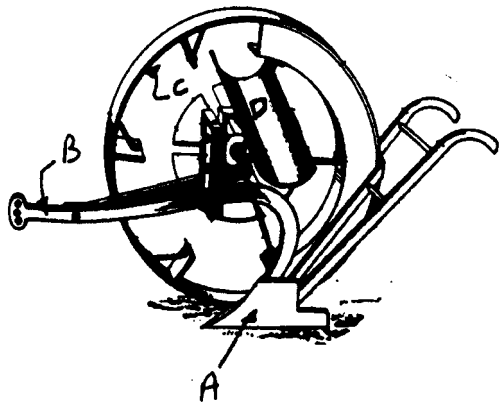

A - Plow; B - Draft connection; C - Transverse conveyor wheel;D - Trough

SEE OR SEARCH THIS CLASS, SUBCLASS:

393, for a plow having inclined axis conveyor wheel.

392 And endless conveyor:

This subclass is indented under subclass 391. Apparatus also combined with a series of elements connected to one another in a continuous loop for carrying the excavated material for further discharge.

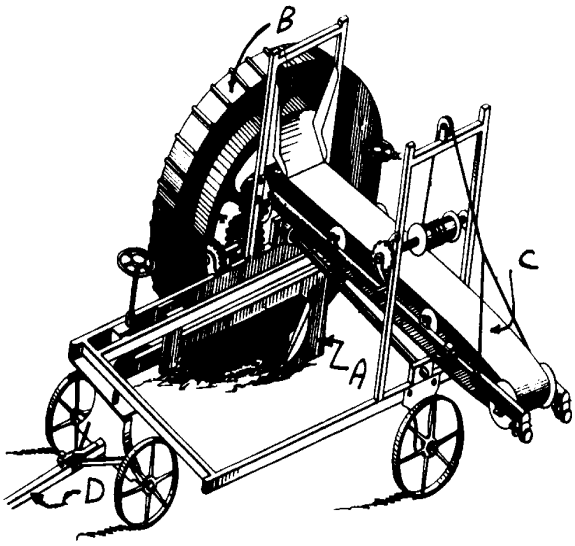

A - Plow; B - Transverse conveyor wheel; C - Endless conveyor;D - Draft connection

SEE OR SEARCH CLASS:

198, Conveyors: Power-Driven, subclasses 311+ for a gravity conveyor section and subclasses 523+ for a conveyor system having a gravity conveyor section.

393 Plow with inclined axis conveyor wheel:

This subclass is indented under subclass 381. Apparatus including a rotary material transporting implement having buckets or receptacles on its periphery supported to run upon the ground in an angular position and adapted to receive the loosened soil from a V-shaped or diagonally oriented scraper or blade.

SEE OR SEARCH THIS CLASS, SUBCLASS:

391+, for a plow combined with a transverse conveyor wheel.

394 CABLE-OPERATED (E.G., DRAGLINE):

This subclass is indented under the class definition. Apparatus including means to pull by a strand capable of exerting only tensile force.

SEE OR SEARCH THIS CLASS, SUBCLASS:

341, for a dredger having a tool in the form of a shovel or bucket.

347+, for a ditcher having a digging tool in the form of a shovel or bucket.

SEE OR SEARCH CLASS:

172, Earth Working, subclasses 26.5+ for subject matter of that class wherein a scraper is adapted to be connected by a cable or similar flexible means to a fixed structure and is driven relative to that structure.

254, Implements or Apparatus for Applying Pushing or Pulling Force, subclasses 264+ for subject matter of that class which includes a drive device which contacts and pulls on a cable when a load is hauled or hoisted between locations.

414, Material or Article Handling, subclass 570 for an endless or a rotary carrier and a dragline scoop.

395 Boom-type:

This subclass is indented under subclass 394. Apparatus including an elongated member from which the strand extends to the scoop or bucket.

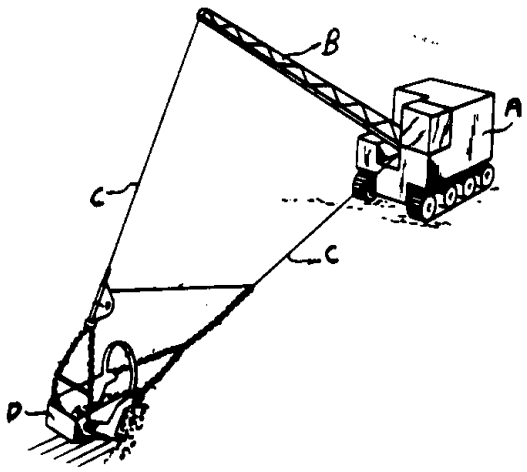

A - Vehicle; B - Boom; C - Drag cable; D - Drag bucket

(1) Note. Boom usually consists of a mast, crane body, or other supporting structure.

(2) Note. The boom-type excavator usually has four motions: (a) loading, which is accomplished by pulling the bucket toward the machine with a drag cable attached to the bucket chain; (b) hoisting, which is accomplished by a second cable from the bucket-chain hoist over the boom point sheave; (c) swinging and returning, which are accomplished by interrelated manipulation of the drag cable and the hoisting cable via a gear train; (d) dumping of the bucket, which is controlled by means of an equalizing dump cable.

SEE OR SEARCH THIS CLASS, SUBCLASS:

182, for an excavator having an orange-peel bucket.

341, for a dredger having a tool in the form of a shovel or bucket.

461, for an excavator with a clamshell bucket.

SEE OR SEARCH CLASS:

212, Traversing Hoists, subclasses 199+ for apparatus having boom including supporting structure; subclasses 255+ for a vertically swinging boom; subclasses 347+ for a subcombination under the class definition including an elongated structural member disclosed as being part of a traversing hoist.

254, Implements or Apparatus for Applying Pushing or Pulling Force, subclasses 264+ for apparatus for hauling or hoisting a load, including a driven device which contacts and pulls on cable.

414, Material or Article Handling, subclass 569 for a vertically swinging load support including a hoist or a dragline; subclass 570 for an endless or a rotary carrier and a dragline scoop; subclasses 592+ for an elevator or a hoist with loading and unloading means; subclasses 680+ for a vertically swinging load support.

396 Including means to control digging, hoisting, and dumping:

This subclass is indented under subclass 395. Apparatus wherein the hauling and hoisting wires are manipulated by a spring, latch, control briddle, draft briddle, toggle mechanism, or similar implement to regulate loading and unloading operations.

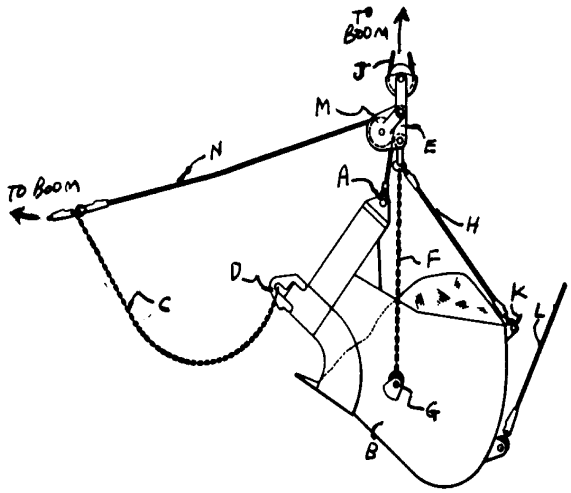

A - Bucket hood; B - Bucket; C - Loading chain; D - Bucketforward end; E - Connecting means for hoist chain and bucket; F-; Hoist chain; G,K - Bucket trunions; H - Check line; J - Hoistline to boom; L - Supplementary control cable; M - Pulley block;N - Dragline

SEE OR SEARCH CLASS:

212, Traversing Hoists, subclass 167 for a traversing hoist with a haul-in line; subclass 239 for means to swing boom vertically having a flexible cable.

254, Implements or Apparatus for Applying Pushing or Pulling Force, subclasses 264+ for a power transmitting pulley and a rope or belt in either drive or in cable return means and a device or member for contacting and guiding a moving cable.

414, Material or Article Handling, subclass 142.9 for loading or unloading on a marine vessel by use of a hoist line having a scoop or scraper.

397 Including mounting or support structure (e.g., boom support, sheave or pulley support):

This subclass is indented under subclass 395. Apparatus wherein the significance is attributed to the boom or bearing support means (e.g., sheave or pulley support).

SEE OR SEARCH CLASS:

248, Supports, subclass 678 for a base or platform for a machinery support.

398 Scoop or bucket:

This subclass is indented under subclass 394. Apparatus including an excavating tool consisting of a ladle or cylindrical container having a bottom, back and side walls particularly adapted for use with a cable operated excavator.

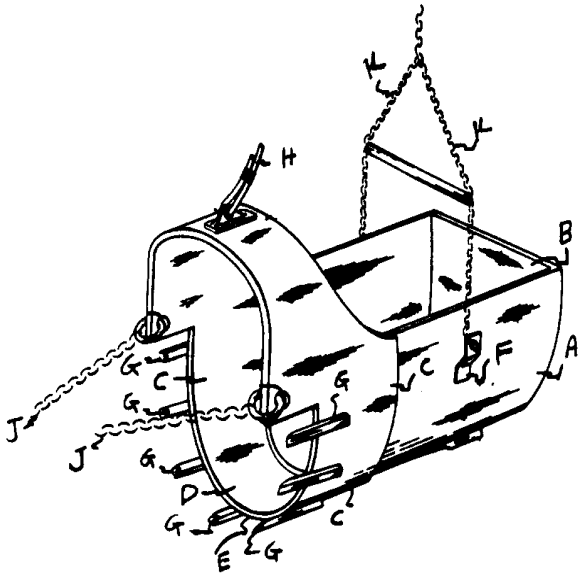

A - Bucket side; B - Bucket end plate; C - Bucket lip;D - Lip bottom; E - Digging edge; F - Bracket; G - Digging teeth;H - Supporting cable; J - Dragging chain; K - Lifting chain

SEE OR SEARCH THIS CLASS, SUBCLASS:

341, for a dredger with a scoop as a digging tool.

379+, for a ditcher with a scoop or shovel as a digging tool.

444+, for a scoop or bucket structure.

465, for an endless digger bucket structure.

SEE OR SEARCH CLASS:

414, Material or Article Handling, subclass 394 for load-transporting vehicle having a bucket or scoop-type holder; subclasses 618+ for an elevator or a hoist with a grab-type loading and unloading means.

399 Including support or mounting device (e.g., hitch, shackle, lifting or dumping trunion):

This subclass is indented under subclass 398. Apparatus including attaching means to facilitate attachment of a scoop or bucket to a cable line.

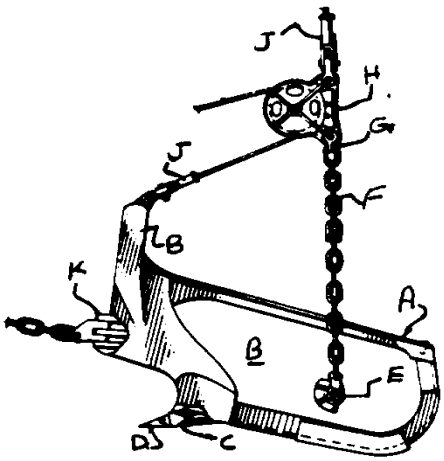

A - Dragline bucket; B - Bucket walls; C - Bucket lip;D - Bucket teeth; E - Bucket trunions; F - Hoist chain; G - Shackle;H - Dump block; J - Rope sockets; K - Hitch plate

(1) Note. The cable line usually consists of a hauling line, briddle line, or holding line.

SEE OR SEARCH CLASS:

24, Buckles, Buttons, Clasps, etc., subclasses 115+ for a cord and rope holder.

248, Supports, subclasses 274.1+ for an adjustable bracket.

294, Handling: Hand and Hoist-line Implements, subclasses 68.26+ for a hoistable receptacle with a tilting discharge or loading, having trunions.

400 Trolley-supported:

This subclass is indented under subclass 394. Apparatus wherein the scoop or bucket is movable along or upon a cableway, the cableway being so arranged to permit the scoop or bucket to engage the ground for digging and filling, and to be tightened to cause the scoop or bucket to be operated free of the ground.

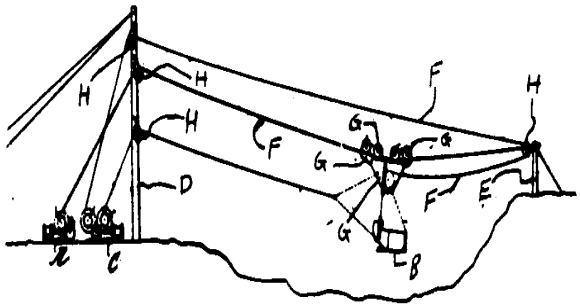

A,C - Cable drums; B - Bucket; D,E - Support towers; F -Load supporting cableway; G - Trolley assembly; H - Sheave pulley

SEE OR SEARCH CLASS:

212, Traversing Hoists, subclasses 76+ for a load handling hoist including a track, a carriage thereon, a hoisting machine fixed in relation to the track, and one or more cables extending from the hoisting machine to the carriage for hoisting and traversing the load.

254, Implements or Apparatus for Applying Pushing or Pulling Force, subclasses 264+ for apparatus for hauling or hoisting load; subclasses 389+ for a device or member for contacting and guiding a moving cable.

414, Material or Article Handling, subclasses 560+ for a traversing, hoisting-type material holding implement; subclasses 595+ for an elevator or a hoist including loading or unloading means.

401 Including cable or rope control means to facilitate loading, transporting, or dumping: This subclass is indented under subclass 400. Apparatus including manipulating means (e.g., spring, latch, lever, and link mechanism) to regulate loading and unloading operations.

SEE OR SEARCH CLASS:

212, Traversing Hoists, subclasses 73+ and 76+ for load handling hoists including a track, a carriage thereon, a hoisting machine fixed in relation to the track, and one or more cables or ropes extending from the hoisting machine to the carriage for hoisting and traversing the load.

403 COMBINED OR CONVERTIBLE: This subclass is indented under the class definition. Apparatus wherein the excavator includes an excavating tool properly classifiable in this class in some way mounted or structurally arranged for use along with another tool which may be either a tool of this class or a tool of another class not superior to this class or in which the excavator includes a tool properly classifiable in this class which is particularly adapted to be changed or modified in some way, or rearranged in some manner, so as to either be used as a different type of tool or to effectively become a different type of tool.

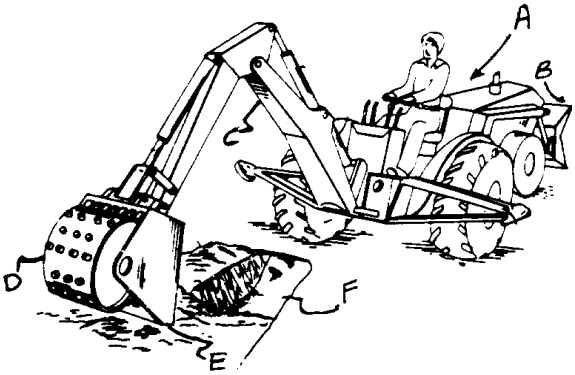

A - Tractor; B - Scoop or bucket; C - Boom; D - Roller; E- Scraper blade; F - Trench

(1) Note. Class 37 is superior to Class 172; therefore, the combination of a Class 37 tool with a Class 172 tool is proper for this subclass.

(2) Note. Class 37 is superior to Class 414; therefore, the combination of a Class 37 tool with a Class 414 tool is proper for this subclass.

(3) Note. For a proper placement of a patent for this subclass, at least one claimed tool must be of the Class 37 type.

(4) Note. The change in the apparatus must be more than merely placing a part in one of a series of adjacent holes or in general making a change which amounts to only an adjustment or a minor alter-

ation in the overall functioning of the device.

(5) Note. The change must be more than to change a part between an operative and an inoperative position.

(6) Note. If one of the tools is used in snow removal, it should be classified in this class, subclass 241, and cross-referenced in this subclass.

SEE OR SEARCH CLASS:

172, Earth Working, subclasses 245+ for an earth working tool which is convertible or changeable by disassembly or assembly; subclass 438 for a combined earth working implement.

414, Material or Article Handling, subclasses 685+ for a shovel or fork-type material handling implement; subclasses 722+ for a material handling implement including shovel, rake, handle, or boom structure; and subclass 912 for a material handling implement which is combined or convertible.

404 Combined with subsoiler:

This subclass is indented under subclass 403. Apparatus in which the excavator is provided with an earth ripping tooth for ripping or scarifying the earth.

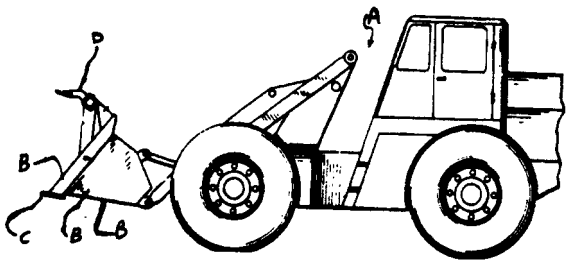

A - Vehicle; B - Bucket or scoop; C - Digging edge; D - Scarifierteeth

SEE OR SEARCH CLASS:

172, Earth Working, subclasses 699+ for specifics of a subsoiler; subclasses 784+ and 817 for a subsoiler combined with a scraper.

299, Mining or In Situ Disintegration of Hard Material, subclasses 37.1+ and 67 for a hard material disintegrating machine having similar cutter.

405 Combined with fork or rake:

This subclass is indented under subclass 403. Apparatus wherein one of the implements includes a plurality of elongated tines.

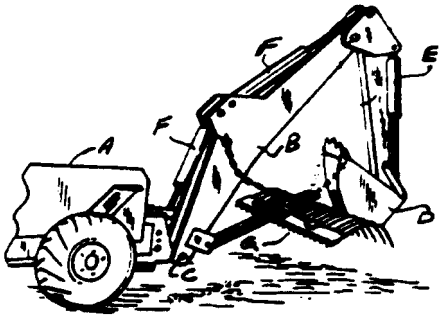

A - Vehicle; B - Boom stick; C - Boom support; D - Bucket;E - Bucket control means; F - Boom control means; G - Rake

SEE OR SEARCH THIS CLASS, SUBCLASS:

301+, for a fork or rake used in clearing the land.

SEE OR SEARCH CLASS:

172, Earth Working, subclass 815 for a tine attached to a leveling blade.

406 Combined with clamp, grapple, or shear:

This subclass is indented under subclass 403. Apparatus wherein one of the implements includes means for gripping, holding, or clasping material or object, or cutting means such as a fixed blade and a movable blade with means to move the movable blade toward and away from the fixed blade.

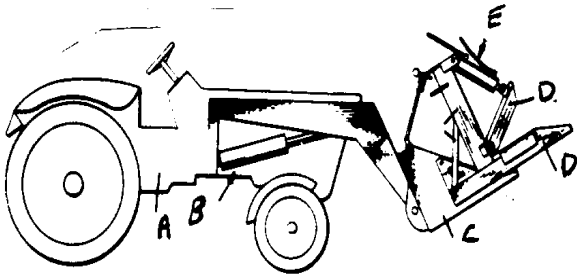

Fig. 1 COMBINED WITH SHEAR; A - Vehicle; B - Hydraulicmeans for bucket; C - Bucket; D - Shears; E - Shears actuating means

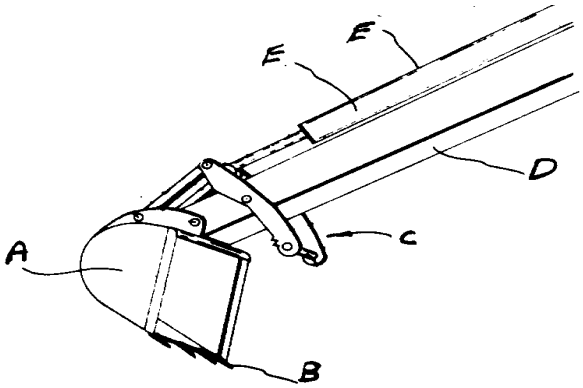

FIG. 2 - COMBINED WITH CLAMP A- Bucket; B - Digging teeth; C - Clamp; D - Boom stick; E - Control means

SEE OR SEARCH CLASS:

30, Cutlery, subclasses 34.05+ for a material handler having a grip-type shear.

83, Cutting, subclass 928 for a vehicle mounted cutting device.

144, Woodworking, subclasses 34.1+ for a cutting or gripping device used in tree felling.

294, Handling: Hand and Hoist-line Implements, subclasses 86.4+ for a specific grapple.

414, Material or Article Handling, subclasses 722+ for a material handling implement including shovel, rake, handle, or boom structure; subclasses 729+ for a material handler including a grab.

407 With scraper:

This subclass is indented under subclass 403. Apparatus wherein one of the implements is a leveling blade.

(1) Note. If the scraper is used in snow removal, it should be classified in Class 37, subclass 241, and cross-referenced here.

SEE OR SEARCH THIS CLASS, SUBCLASS:

241, for a digging implement combined with or convertible to a snow removal device.

266+, for a snowplow scraper blade.

SEE OR SEARCH CLASS:

172, Earth Working, subclasses 810+ for specifics of a bulldozer-type leveling blade.

408 Integrally mounted to a tool body and independently usable by repositioning the tool body:

This subclass is indented under subclass 407. Apparatus including a leveling or scraping blade fixed to another tool which becomes operational by movement of the tool combination (e.g., by pivotal rotation or movement) so that only one tool can be used at a time.

(1) Note. The structure upon which the tools are mounted must be manipulated in some fashion such that while one tool is in a working position the other tool is held in a nonoperative position, and, by reverse manipulation, one tool can be moved to nonoperative position while the other tool is moved to working position.

409 Multicomponent tool (e.g., scoop or bucket) convertible by relative movement of tool parts:

This subclass is indented under subclass 407. Apparatus wherein two or more implements movably cooperate with one another whereby in one position of relative movement a scraper blade is formed while in a different position of relative movement another tool is operational.

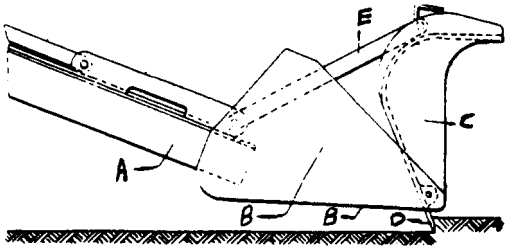

FIG. 1 - AS BULLDOZER BLADE

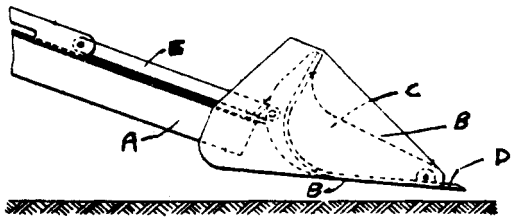

FIG. 2 - AS TRACTOR SHOVEL - A - Pusharm to vehicle; B- Bucket or scoop; C - Cutting shoes; D - Digging edge; E - Pivotlink

410 Separate tools simultaneously mounted and independently usable:

This subclass is indented under subclass 407. Apparatus including plural implements which are mounted on the same vehicle or support structure but are not particularly designed to cooperate with one another.

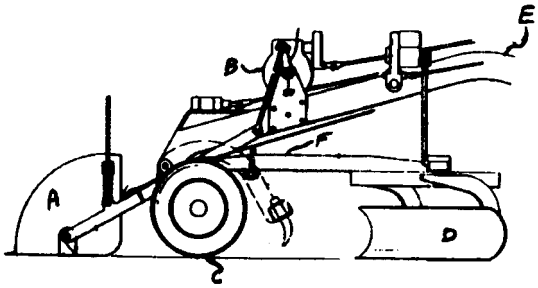

A - Scoop or bucket; B - Scoop control means; C - Front wheels;D - Scraper; E - Connecting means to vehicle; F - Draw bar

(1) Note. The tools are intended to be used separately and are more or less just conveniently mounted on the support structure.

411 SCOOP OR EXCAVATING AND TRANSPORTING CONTAINER:

This subclass is indented under the class definition. Apparatus wherein the excavator includes a ladle, shovel, or bucket capable of digging and holding the material.

(1) Note. Patents in which the scoop is claimed in conjunction with a boom, dipstick, or liftlinks constitute a recitation of a handling structure and are classified in Class 414, Material or Article Handling.

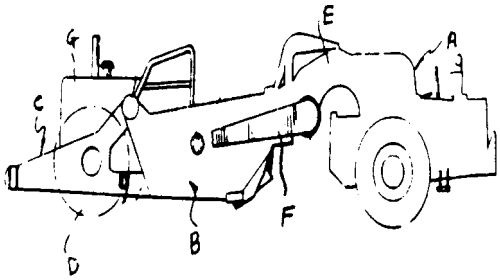

A - Tractor or vehicle ; B - Bowl or scoop; C - Push frame;D - Rear wheels; E - Hitch (goose neck); F - Draft arms; G - Separatemechanism for bowl operation

SEE OR SEARCH THIS CLASS, SUBCLASS:

106+, for a railway grader with a scoop.

264+, for a snow or ice removing device having a scoop.

341, for a dredger having scoop as a digging tool.

SEE OR SEARCH CLASS:

172, Earth Working, subclasses 26.5+ for a dragline scraper; subclasses 63+ for a nondriven tool; subclasses 197 and 199 for a drag, scraper, or leveling blade; subclass 684.5 for a frame supported blade or scraper; subclasses 777, 779, 780, and 781 for a scraper; subclasses 811+ for a transversely mounted blade.

294, Handling: Hand and Hoist-Line Implements, subclasses 68.1 through 68.3 for a hoistable receptacle and subclass 176 for a scoop.

414, Material or Article Handling, subclasses 722+ for a shovel, rake, handle, or boom structure.

412 Supported on vehicle between longitudinally spaced ground supports:

This subclass is indented under subclass 411. Apparatus wherein the scoop or container is held in position by a vehicle having front or rear wheels or their equivalent.

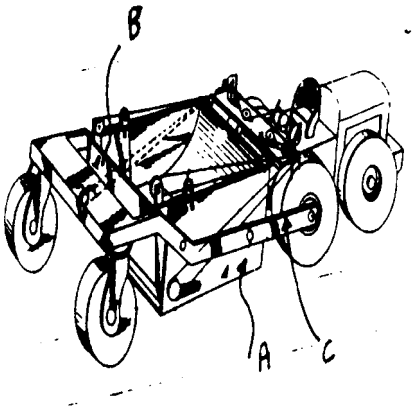

A - Main bowl or scoop; B - Apron; C - Longitudinal support

413 With alarm, indicator, signal, or inspection means:
This subclass is indented under subclass 411. Apparatus including means to either acknowledge, measure, detect, or examine a change in the excavator, the excavated material, or the environment associated therewith.

SEE OR SEARCH THIS CLASS, SUBCLASS:
308, for signal, scale, indicator, or inspection means for a dredger.

SEE OR SEARCH CLASS:
116, Signals and Indicators, for an alarm, indicator, or signal of a mechanical nature.
340, Communications: Electrical, for an alarm, indicator, or signal of an electrical nature.
414, Material or Article Handling, subclass 698 for a material handling device of the tilting shovel or fork-type having an indicating means.
701, Data Processing: Vehicles, Navigation, and Relative Location, subclass 50 for vehicle guidance, operation, or indication of a construction or agricultural vehicle.

414 Condition responsive or programmable means controls the excavating operation:
This subclass is indented under subclass 412. Apparatus having means to activate digging means into digging condition by the control of a pre-established sequencing means.

SEE OR SEARCH THIS CLASS, SUBCLASS:
348, for a condition responsive ditcher.
382, for a condition responsive road grader.

SEE OR SEARCH CLASS:
172, Earth Working, subclasses 2+ for an earth working device having automatic control.
701, Data Processing: Vehicles, Navigation, and Relative Location, subclass 50 for vehicleguidance, operation, or indication of a construction or agricultural vehicle.

415 Control of attitude or depth of cut:
This subclass is indented under subclass 414. Apparatus wherein the regulating means is specifically adapted to regulate the earth penetration.

416 Control of scoop component (e.g., elevator, apron, or ejector):
This subclass is indented under subclass 414. Apparatus wherein the significance is attributed to regulating the operation of one or more of the various components which make up the excavator (e.g., the loading mechanism, the gate which swings to close the bucket to retain the pile of earth, or the gate which discharges the earth).

417 With specific suspension or means to steer or facilitate mounting of implement on vehicle:
This subclass is indented under subclass 412. Apparatus wherein the significance is attributed to a system of springs, shock absorbers, and other devices supporting the upper part of the excavator, to a mechanism for directional control of the excavator or to the draft frame for the excavator.

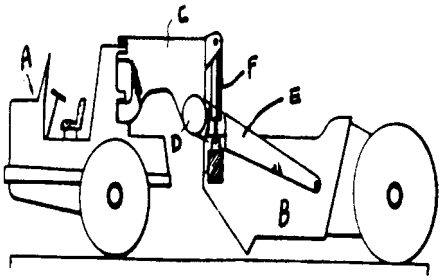

A - Tractor; B - Bowl; C - Goose neck (hitch); D - Draft tube;E - Draft arms; F - Suspension means

418 With tandem or plural scoops or compartments:

This subclass is indented under subclass 412. Apparatus including at least two buckets one behind the other, or the bucket being divided into separate parts or sections partitioned from one another with each separate part being adapted to hold the excavated material.

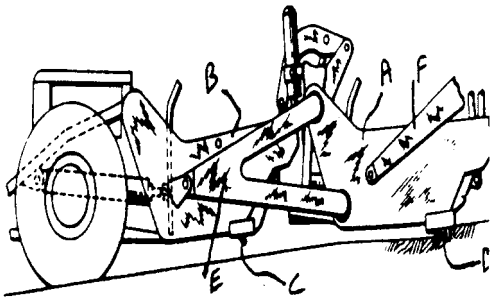

A - Front or first bowl; B - Rear or second bowl; C,D - Diggingedge; E,F - Support or draft arms

419 With means to aid loading or load distribution:

This subclass is indented under subclass 412. Apparatus combined with means to help in directing the material into the container as it moves over the ground or to help in spreading the material more or less evenly throughout the container.

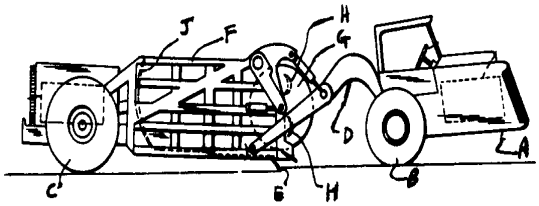

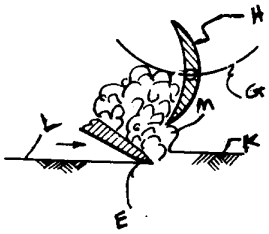

A - Tractor; B - Front wheels; C - Rear wheels; D - Gooseneck or coupling; E - Digging edge; F - Bowl; G - Loading structure;H - Loading blades; J - Load pusher; K - Earth section; L - Gradeof cut; M - Earth accumulation

420 By auger:

This subclass is indented under subclass 419. Apparatus wherein the mechanism which aids loading or load distribution consists of a rotary conveyor having a shank with a spiral channel or channels in the shape of a screw and is adapted to feed or distribute the material.

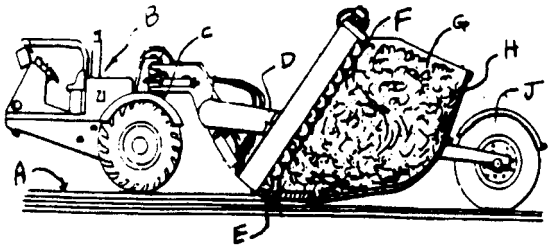

A - Ground; B - Tractor; C - Hitch; D - Support frame;E - Digging edge; F - Auger; G - Earth; H - Bowl; J - Rear wheels

421 By digging movement of apron:

This subclass is indented under subclass 419. Apparatus wherein the mechanism which aids loading or load distribution consists of a front gate or short ramp which normally closes the front of the scoop to retain the load.

(1) Note. The “apron” aids loading or load distribution by performing a hoeing motion to engage the earth being excavated as the scoop moves along and then pulling it up into the scoop.

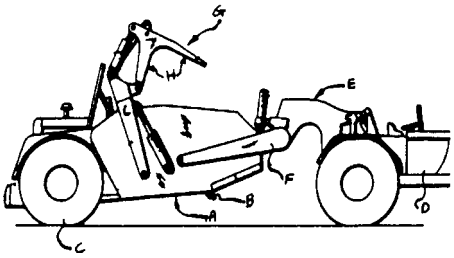

A - Bowl; B - Digging edge; C - Rear wheels; D - Tractor;E - Draft frame; F - Draft arms; G - Loading mechanism; H - Apron

422 By endless conveyor:
This subclass is indented under subclass 419. Apparatus wherein the mechanism which aids loading or load distribution is in the form of a series of elements connected to one another in a continuous loop travelling about two or more pulleys, sprockets, or drums.

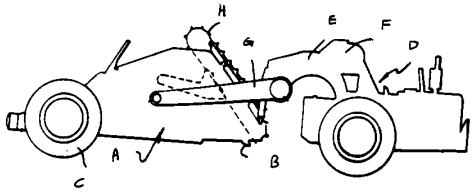

A - Bowl; B - Digging edge; C - Rear wheels; D - Tractor;E - Goose neck; F - Hitch; G - Draft arms; H - Endless conveyor

423 With particular conveyor feature including drive means:
This subclass is indented under subclass 422. Apparatus wherein the significance is attributed to structure or the motion transmitting mechanism of the endless conveyor (e.g., sprocket, chain, gearing).

SEE OR SEARCH THIS CLASS, SUBCLASS:
361, for a drive-related feature of a transverse conveyor.

424 With coaction between apron or elevator and bowl:
This subclass is indented under subclass 412. Apparatus wherein the significance is attributed to a relative movement or interaction between the bucket that carries the earth and the gate which swings to close the bucket to retain the pile of earth or the mechanism which distributes earth evenly in the bucket.

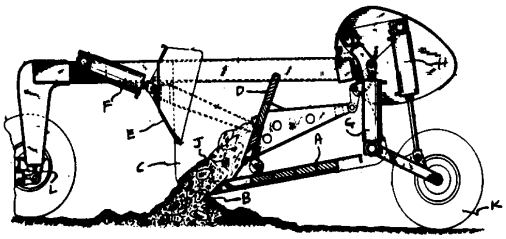

A - Bowl bottom; B - Digging edge; C - Bowl side walls;D - Rear apron; E - Front apron; F - Front apron control;G - Bowlstructure; H - Rear apron control; J - Earth; K - Rear wheels; L- Draft to vehicle

425 Actuated by fluid means:
This subclass is indented under subclass 424. Apparatus wherein the relative action between the apron or elevator and bowl is controlled by hydraulic or pneumatic means.

SEE OR SEARCH THIS CLASS, SUBCLASS:
428, for a fluid-actuated bowl manipulation.
430, for a fluid-actuated apron manipulation.

426 With coaction between apron or elevator and ejector:
This subclass is indented under subclass 412. Apparatus wherein the significance is attributed to a relative movement or interaction between the load pushing or discharging member and the gate which swings to close the bucket to retain a pile of earth or the mechanism which distributes the earth evenly in the bucket.

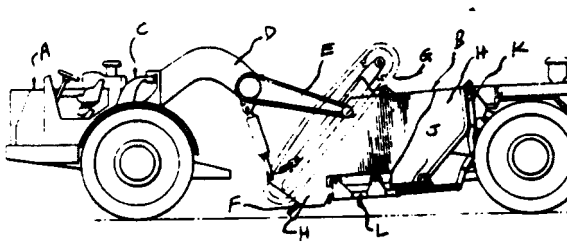

A - Tractor; B - Bowl; C - Hitch; D - Draw bar; E - Draft bar;F - Digging edge; G - Elevator; H - Bowl walls; J - Fixed bowl floor;K - Ejector mechanism; L - Movable bowl floor

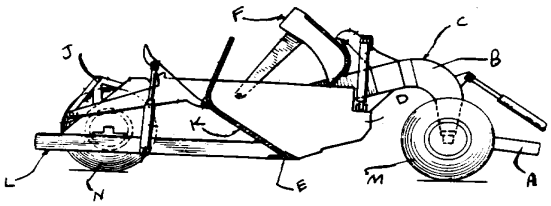

A - Tow bar;B - Goose neck; C - Yoke ; D - Bowl; E - Diggingedge; F - Apron; J - Ejector mechanism; K - Ejector; L - Bowl frame;M - Front wheels; N - Rear wheels

SEE OR SEARCH THIS CLASS, SUBCLASS:
424+, for the coaction between the apron or elevator and bowl.
429+, for an apron structure manipulation.

427 With significant bowl structure or manipulation:
This subclass is indented under subclass 412. Apparatus wherein the significance is attributed to the way in which the scoop components are arranged or put together to form a particular scoop shape or to the improvement in the operational control of the body portion of the scoop.

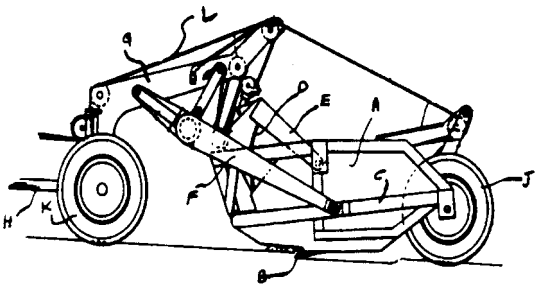

A - Bowl side walls; B - Digging edge; C - Bowl supportframe; D - Gate; E - Gate support arms; F - Bowl support arms; G- Boom beam; H - Tow bar to vehicle; J - Rear wheels; K - Frontwheels; L - Control cable for bowl manipulation

SEE OR SEARCH THIS CLASS, SUBCLASS:
429+, for an apron structure or manipulation.

428 Actuated by fluid means:
This subclass is indented under subclass 427. Apparatus wherein the bowl manipulation is controlled by hydraulic or pneumatic means.

SEE OR SEARCH THIS CLASS, SUBCLASS:
430, for a fluid-actuated apron structure manipulation.

429 With significant apron structure or manipulation:
This subclass is indented under subclass 412. Apparatus wherein the significance is attributed to the way in which the gate components are arranged or put together to form a particular shape or to the improvement in the operational control of the gate.

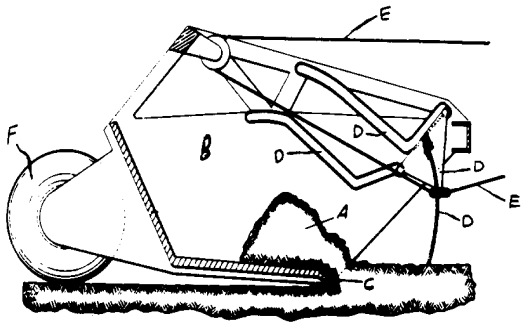

A - Earth; B - Bowl; C - Digging edge; D - Apron mechanism;E - Apron control cable; F - Ground wheels

(1) Note. Apron usually assists in the loading of the bowl, closes the loaded bowl, and is elevated for dumping. The simplest type of apron is a one-piece plate, usually curved, having mounting arms that are pivoted on the bowl side walls so that the lower edge of the apron moves from elevated position to closed position in an arc of a circle struck about the axis formed by the mounting pivot.

SEE OR SEARCH THIS CLASS, SUBCLASS:
424+, for coaction between apron or elevator and bowl.

430 Actuated by fluid means:
This subclass is indented under subclass 429. Apparatus wherein the manipulation or movement of the apron is controlled by hydraulic or pneumatic means.

431 With particular unloading feature:
This subclass is indented under subclass 412. Apparatus in which the significance is attributed to act of removing the excavated earth from the scoop.

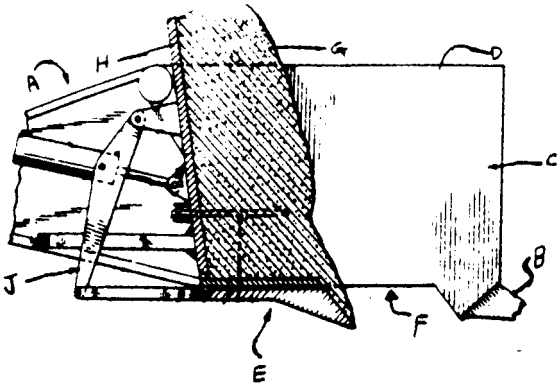

A - Excavator; B - Digging edge; C - Bowl; D - Bowl sidewalls; E - Bowl floor; F - Discharge opening; G - Earth; H - Ejectorplate; J - Ejector mechanism

432 Rear unloading:
This subclass is indented under subclass 431. Apparatus wherein the earth is discharged from the back of the scoop.

SEE OR SEARCH THIS CLASS, SUBCLASS:
437+, for rear unloading of a bowl.

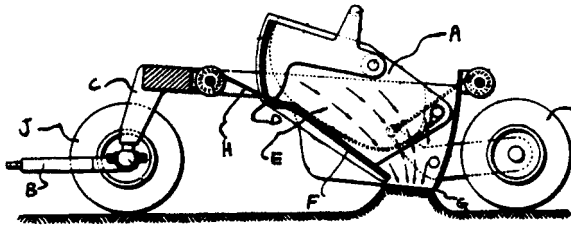

A - Bowl; B - Draw bar to vehicle; C - Goose neck or coupling; D - Digging edge; E - Bowl side plates; F - Bottom plate or floor;G - Ejector plate or blade; H - Control cable; J - Front wheels;K - Rear wheels

433 Revolving-type:
This subclass is indented under subclass 431. Apparatus wherein the entire scoop or its bottom is rotated.

434 Manually operated (e.g., two-wheel barrow):
This subclass is indented under subclass 411. Apparatus wherein the scoop is provided with a handle or handles for hand manipulation for digging, transporting, and unloading of material.

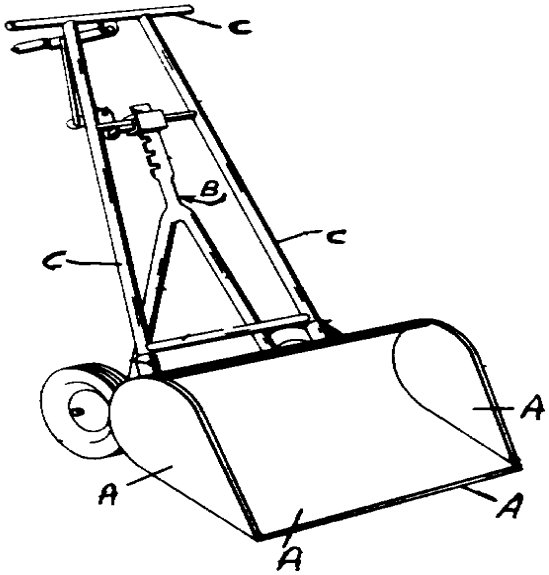

A - Scoop or bucket; B - Scoop adjusting means; C - Handlebarassembly

435 Mounted rearwardly of vehicle:
This subclass is indented under subclass 411. Apparatus wherein the bucket or scoop is mounted at the back of a vehicle, usually on a vehicle's three-point linkage.

SEE OR SEARCH CLASS:
414, Material or Article Handling, subclass 703 for a bucket or scoop-type load carrier attached to a rear mounted draft member.

436 Bowl operatively connected to wheel axle:
This subclass is indented under subclass 435. Apparatus wherein the bucket is pivotally connected to the wheel supporting shaft through a lever mechanism, rack and pinion mechanism, or ratchet and pawl mechanism whereby the rotation of the wheel supporting shaft imparts necessary force to the mechanism to operate the bucket.

437 Including rear unloading:
This subclass is indented under subclass 436. Apparatus wherein the material is discharged from the back of the bowl.

SEE OR SEARCH THIS CLASS, SUBCLASS:
432, for a rear unloading feature in a bowl supported on a vehicle between longitudinally spaced ground supports.

438 Actuated by fluid means:
This subclass is indented under subclass 437. Apparatus wherein the movement of the unloading mechanism is controlled by hydraulic or pneumatic means.

439 With caster wheel or shoe:
This subclass is indented under subclass 436. Apparatus wherein the bowl is additionally supported on a pilot wheel or sliding contact plate.

440 Lever and latch mechanism:
This subclass is indented under subclass 436. Apparatus wherein a metal bar pivoted on a fixed fulcrum causes the pivotal movement of the bowl.

441 Dumping runner or revolving-type:
This subclass is indented under subclass 435. Apparatus including a lever mechanism, rack and pinion mechanism, or similar means for controlling the bowl when it is inverted for unloading.

SEE OR SEARCH CLASS:
172, Earth Working, subclasses 205 and 236+ for an earth working means manipulated by a ground engageable draft responsive means.

442 Pushed forwardly of vehicle for filling:
This subclass is indented under subclass 411. Apparatus wherein the container or scoop is attached at the front of a wheeled or tracked vehicle and is adapted to be pushed into the material to be excavated.

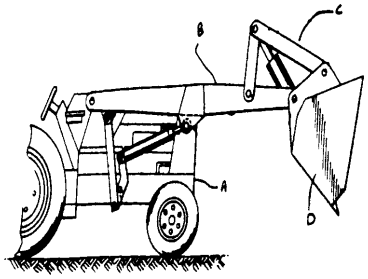

A - Tractor; B - Lift arm or boom; C - Bucket positioningmechanism; D - Bucket

SEE OR SEARCH CLASS:
172, Earth Working, subclasses 810+ for a mounting means for connecting an earth working element to, and ahead of, a self-propelled vehicle and wherein a claim may include the tool, the vehicle, or a control system for the adjusting linkage.

443 Dipper-type (e.g., backhoe bucket):
This subclass is indented under subclass 411. Apparatus wherein the scoop or excavating container is normally mounted on a pivoted boom which is mounted to a vehicle.

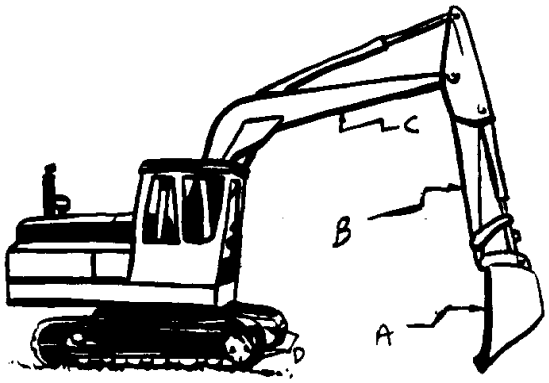

A - Backhoe bucket; B - Stick; C - Boom; D - Track wheels

SEE OR SEARCH THIS CLASS, SUBCLASS:
379+, for a ditcher having a shovel or scoop.

SEE OR SEARCH CLASS:
414, Material or Article Handling, subclasses 694+ for an apparatus comprising a boom mounted to swing horizontally about an axis and having a shovel or fork handle attached thereto for a fixed pivot.

444 Scoop or bucket structure, per se:
This subclass is indented under subclass 411. Apparatus wherein the significance is attributed to the components of the excavating container itself or some portion thereof (e.g., scoop bottom, cutting edge).

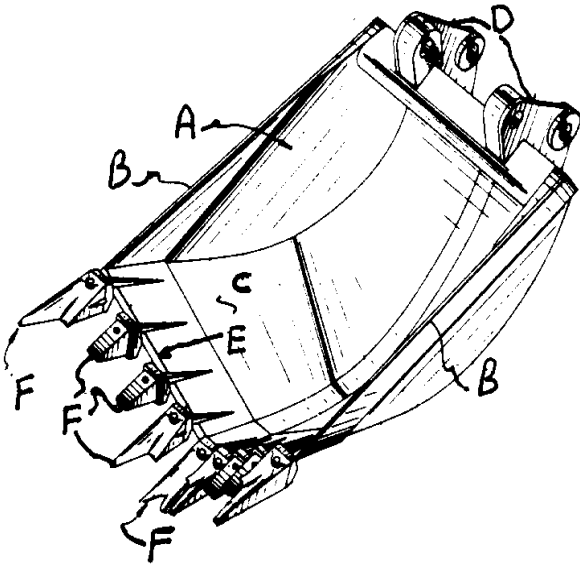

A - Bucket interior; B - Bucket edge; C - Bottom wall; D- Mounting; E - Digging edge; F - Bucket teeth

SEE OR SEARCH THIS CLASS, SUBCLASS:
398+, for the bucket structure of a dragline or cable operated excavator.
465, for the bucket structure of an endless digger.

SEE OR SEARCH CLASS:
172, Earth Working, subclasses 701.1+ for a bulldozer blade.
414, Material or Article Handling, subclasses 722+ for subject matter which includes details of the construction of a scoop, shovel, or tine.

445 Including door structure or operator:
This subclass is indented under subclass 444. Apparatus wherein the significance is attributed to the operable and closable member which in the closed position retains the load, and in the open position allows the load to fall from the bottom of the scoop or container.

SEE OR SEARCH CLASS:
414, Material or Article Handling, subclass 725 for means to force a load out of the scoop.

446 DIGGING EDGE:

This subclass is indented under the class definition. Apparatus including a leading portion of a scoop, shovel, or other implement which cuts into the material to be excavated or the attachment structure thereof.

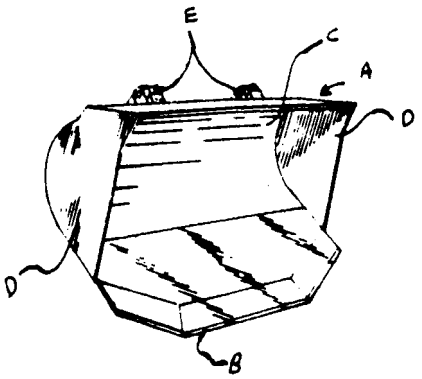

A - Bucket; B - Digging edge; C - Rear bracket wall; D-Bucket side walls; E - Mounting means

SEE OR SEARCH CLASS:

172, Earth Working, subclasses 701.1+ wherein the earth working tool is a transversely elongated bulldozer blade.

175, Boring or Penetrating the Earth, subclass 327 for an earth boring or penetrating bit or bit element.

447 Oscillating or reciprocating:

This subclass is indented under subclass 446. Apparatus wherein the leading portion of the excavating implement is vibrated or moved back and forth relative to the remainder of the implement.

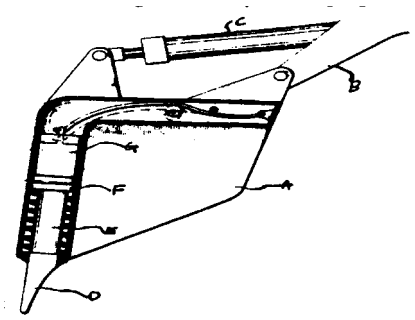

A - Bucket; B - Boom arm; C - Hydraulic cylinder; D - Bucketteeth; E,F - Piston and piston rod; G - Vibrating hammer

SEE OR SEARCH CLASS:

172, Earth Working, subclass 40 for a vibrating earth working tool.

299, Mining or In Situ Disintegration of Hard Material, subclasses 37.1+ for a disintegrating machine having a reciprocating cutter; subclasses 85.1 and 85.2 for a cutterhead or teeth having parts moving relatively during operation.

448 Corner guard (e.g., corner tooth):

This subclass is indented under subclass 446. Apparatus wherein at least one side of a bucket or scoop is provided with an additional separable cutting or wear protection element specifically adapted for being located at the junction of a digging edge and the side wall of the bucket or scoop.

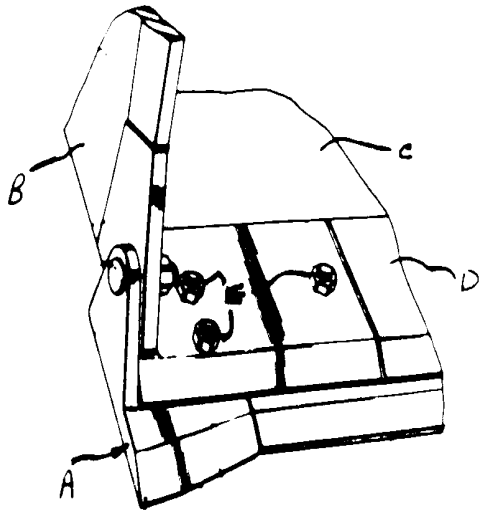

A - Corner guard; B - Bucket side wall; C - Bucket bottomplate ; D - Digging edge; E - Mounting means

SEE OR SEARCH CLASS:

172, Earth Working, subclass 701.2 for a bulldozer blade having a removable corner bit and subclass 701.3 for a bulldozer blade having a removable cutting edge.

449 Repositionable digging edge (e.g., reversible):

This subclass is indented under subclass 446. Apparatus wherein a cutting implement is adapted to be disassembled and reassembled in a different position so that a different portion of the cutting implement can be used to directly engage the material to be excavated.

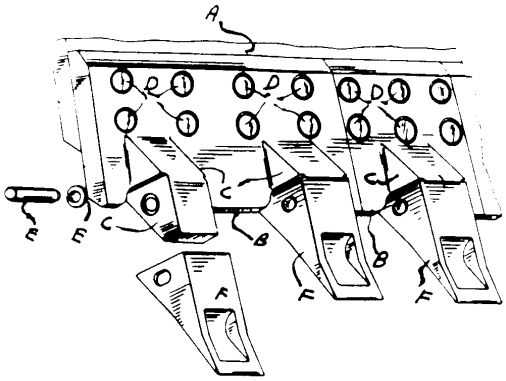

A - Bucket bottom plate; B - Removable digging edge; C- Integral adaptor; D - Retaining means; E - Retaining means; F- Digging teeth

(1) Note. Included in this subclass are patents having digging implement which is adjustably positioned in a variety of positions or can be easily interchanged to provide various cutting edge contours by rotation through 180 degrees or reattachment.

(2) Note. After the digging edge has received a desired degree of wear, its operating position on the base member may be reversed so as to present a fresh or unworn surface so that the life of the digging edge will be effectively prolonged.

SEE OR SEARCH CLASS:

172, Earth Working, subclasses 702+ for a tool or standard wherein a part of the tool may have its position changed through 180 degrees for the purpose of presenting a new wear portion or edge of the tool or for adjusting the position of some part of the tool.

450 Removable digging edge having integral tooth adaptor:

This subclass is indented under subclass 446. Apparatus including a separable shroudlike cutting edge having means for mounting cutting teeth thereon.

(1) Note. Included in this subclass are patents wherein upon wear of a particular cutting edge or an adapter module, only the particular worn component need be replaced and this is accomplished without disturbing of the other components.

SEE OR SEARCH CLASS:

172, Earth Working, subclass 701.3 for a bulldozer tool having a transversely elongated blade with a removable cutting edge; subclasses 772+ for a removable cutting or wearing edge or element for a tool.

451 Distinct wear element mounted between teeth:

This subclass is indented under subclass 446. Apparatus wherein the removable cutting edge sections are mounted between the digging teeth to increase life of the permanent surface of a bucket or scoop.

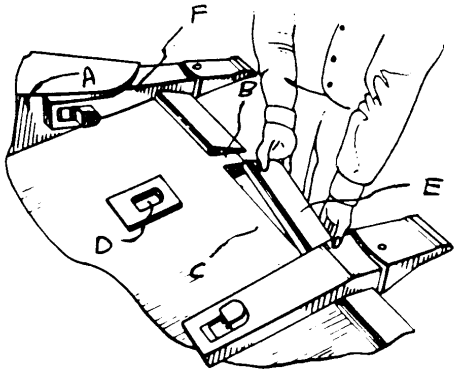

Figure 1. A - Bucket side wall; B - Bucket lip or projection;C - Bucket pad; D - Bucket slot; E - Wear element; F - Corner adaptor

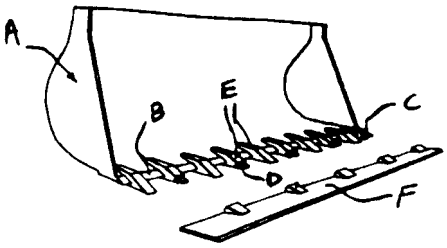

Figure 2. A - Bucket; B - Digging edge; C - Digging teeth;D - Connecting lug; E - Tooth base portion; F - Reversible diggingedge

452 Tooth or adaptor:

This subclass is indented under subclass 446. Apparatus combined with a shearing point or projection extending from a digging edge being specifically adapted for penetrating or breaking the ground, or a socket or projection having a structure specifically adapted for mounting a digging tooth.

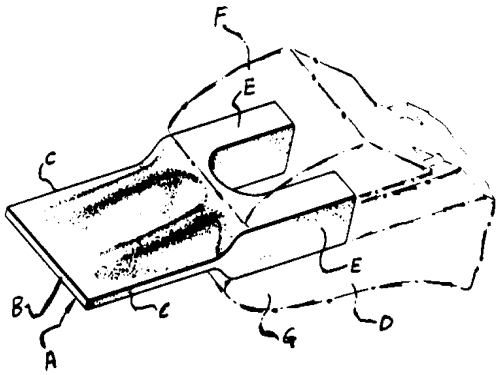

A - Tooth; B - Tooth front face; C - Tooth side face; D-Tooth adaptor or holder ; E - Tooth prongs; F - Top adaptor member;G - Bottom adaptor member

453 Having wear cap:

This subclass is indented under subclass 452. Apparatus including a replaceable element mounted on an upper or a lower edge of a tooth or adaptor for prolonging the life of the tooth or adaptor.

(1) Note. Included in this subclass are patents in which the main tooth body has some additional wear structure added thereto or to the adaptor. The tooth itself is not considered a wear cap.

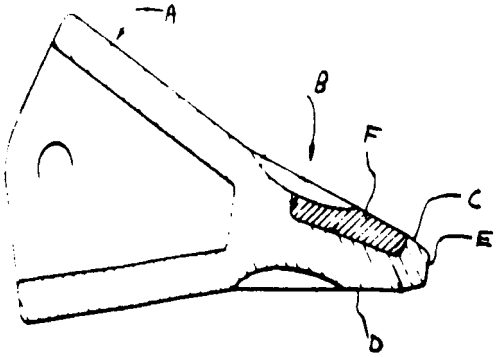

A - Tooth rearward portion; B - Tooth forward portion;C - Tooth top surface; D - Tooth bottom surface; E - Tooth leadingedge; F - Wear cap or insert

454 Repositionable or replaceable tooth (e.g., reversible):

This subclass is indented under subclass 452. Apparatus wherein the digging tooth is adapted to be disassembled and reassembled in a different position so that a different portion of the digging point can be used to engage the material which is to be excavated.

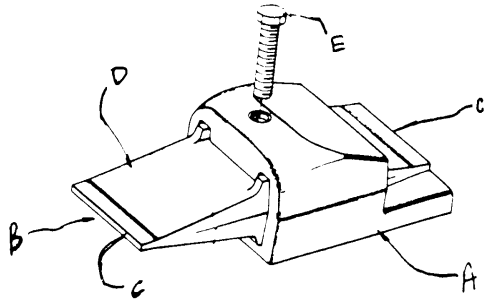

A - Adaptor; B - Tooth; C - Tooth reversible digging edge;D - Tooth working surface; E - Retaining means

(1) Note. The operating position of the tooth is usually reversed on the digging edge to present a new surface so as to prolong the life of the digging point.

SEE OR SEARCH THIS CLASS, SUBCLASS:

449, for a repositionable or reversible digging edge.

455 Mounting or retaining means:

This subclass is indented under subclass 452. Apparatus including the specifics of the attachment structure (e.g., clamp, pin, key, or interlocking surfaces) for releasably securing a tooth or adaptor.

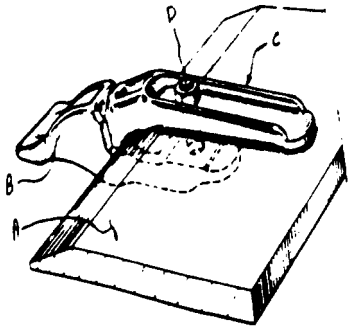

A - Bowl bottom wall; B - Tooth; C - Adaptor; D - Mountingor retaining means

SEE OR SEARCH CLASS:

299, Mining or In Situ Disintegration of Hard Material, subclasses 106+ for a tooth mounting means.

456 Including pin or key:

This subclass is indented under subclass 455. Apparatus wherein the attachment structure includes a removable wedge or rod-type retainer adapted to hold the tooth.

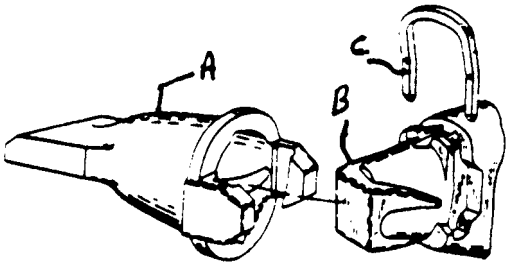

A - Tooth; B - Adaptor; C - Pin or key

457 Having resilient elastomeric element:

This subclass is indented under subclass 456. Apparatus also combined with a polymeric or rubberlike substance having elastic properties adapted to provide a frictional retention force.

SEE OR SEARCH CLASS:

299, Mining or In Situ Disintegration of Hard Material, subclass 107 for a tooth mounting means having a resiliently biased retaining means.

411, Expanded, Threaded, Driven, Headed, Tool-Deformed, or Locked-Threaded Fastener, subclass 512 for a fastener securing element having an elastomeric material..

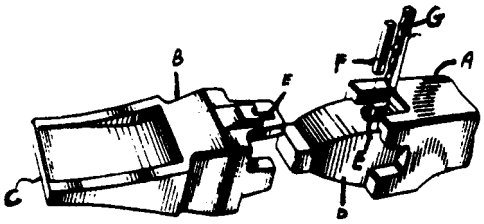

A - Adaptor; B - Tooth; C - Tooth digging edge; D - Adaptornoise; E - Aligned openings; F - Resilient member; G - Pin or key

458 Having resilient metallic element:

This subclass is indented under subclass 456. Apparatus also combined with a hard springlike material having elastic properties adapted to provide a frictional retention force.

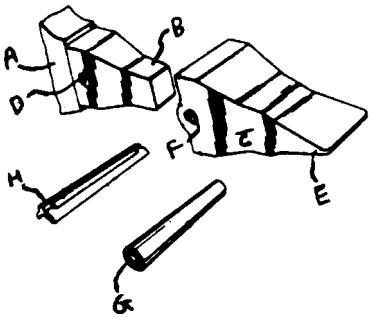

A - Bucket plate; B - Adaptor; C - Tooth; D - Opening forpin; E - Tooth digging edge; F - Opening for pin; G - Metallic spring;H - Pin or key

SEE OR SEARCH CLASS:

172, Earth Working, subclass 705 for a spring biased or formed tool or tool part.

411, Expanded, Threaded, Driven, Headed, Tool-Deformed, or Locked-Threaded Fastener, subclass 516 for a fastener securing element having a metallic springlike element.

459 Wire or rod formed:

This subclass is indented under subclass 458. Apparatus wherein the resilient metallic element is made from an elongate element of a circular cross section.

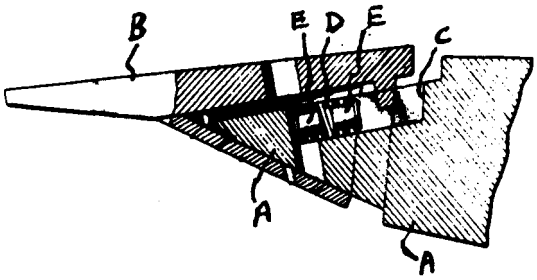

A - Adaptor; B - Tooth; C - Adaptor opening for tooth; D- Wired spring; E - Pin or key

SEE OR SEARCH CLASS:

403, Joints and Connections, subclasses 154+ for a distinct pin retainer.

411, Expanded, Threaded, Driven, Headed, Tool-Deformed, or Locked-Threaded Fastener, subclass 530 for a wire or rod formed resilient metallic element.

460 Specific material (e.g., specialty steel, heat treatment of material, specific hardness test):

This subclass is indented under subclass 446. Apparatus wherein the significance is attributed to a substance or treatment used in forming at least a part of a digging edge.

(1) Note. A mere recitation that a digging element or adapter is made of iron or steel is excluded from this subclass.

461 CLAMSHELL BUCKET:

This subclass is indented under the class definition. Apparatus wherein the digging tool consists of two pivotally cooperating digging elements which are adapted to be dropped in the open position into the material to be excavated and then adapted to be closed, thereby encompassing the material between the two elements.

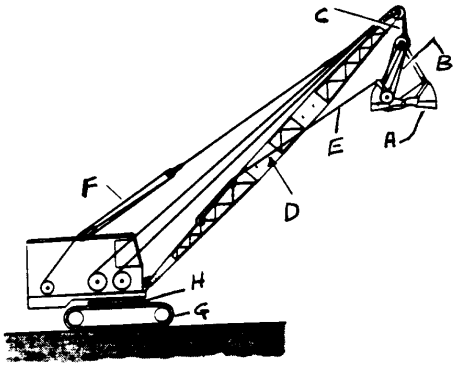

A - Clamshell bucket; B - Closing line; C - Holding line; D- Boom; E - Tag line; F - Boom hoist rope; G - Track; H - Turntable

SEE OR SEARCH CLASS:

294, Handling: Hand and Hoist-line Implements, subclasses 86.4+ for a grapple adapted for grasping a load and having a handling or hoist-line terminal.

462 ENDLESS DIGGER:

This subclass is indented under the class definition. Apparatus wherein the cutting or breaking device is in the form of a series of elements connected to one another in a continuous loop travelling about two or more pulleys, sprockets, or drums.

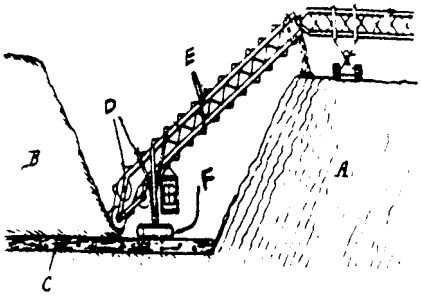

A - Spoil bank; B - Mass of overburden; C - Seam dug bythe excavator; D - Endless digging means; E - Endless flexible memberor chain; F - Tracked wheels

SEE OR SEARCH THIS CLASS, SUBCLASS:

305, for an endless digger or conveyor.

332, for an endless driven digging element.

338+, for endless bucket line.

352, for a ditcher with an endless non-bucket-type digging means.

353+, for a ditcher with an endless bucket.

388, for a road grader having a transverse endless scraper or bucket.

SEE OR SEARCH CLASS:

175, Boring or Penetrating the Earth, subclasses 89+ for an earth boring tool element on a continuously driven flexible endless member.

198, Conveyors: Power-Driven, subclass 509 for a conveyor having buckets specialized to gather load batches; subclasses 701+ for an endless bucket conveyor of general utility.

299, Mining or In Situ Disintegration of Hard Material, subclasses 79.1+ for a cutterhead or tooth, especially subclasses 82.1+ for a chain-type head with plural teeth on a single link.

463 With endless conveyor:

This subclass is indented under subclass 462. Apparatus wherein the means to carry or discharge the earth includes an orbiting continuous carrier to receive the loosened earth from the digger.

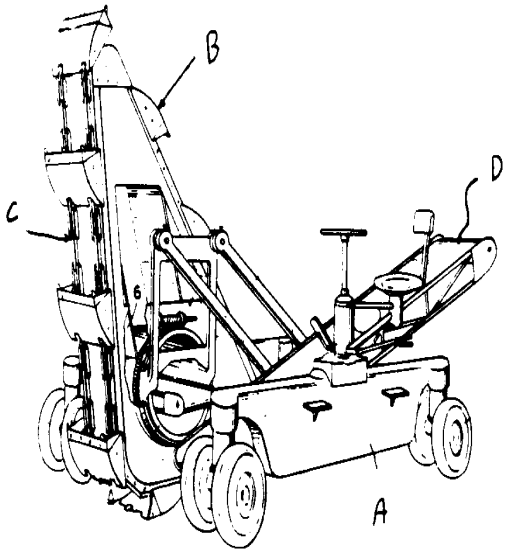

A - Prime mover support frame; B - Endless digging buckets;C - Endless flexible member or chain; D - Endless conveyor

SEE OR SEARCH THIS CLASS, SUBCLASS:

237+, for a snow or ice removal machine with an endless conveyor.

359, for a ditcher with a longitudinal endless conveyor.

360+, for a ditcher with a transverse endless conveyor.

368+, for a slit ditcher with an endless conveyor.

375+, for a plow ditcher having an endless conveyor.

389+, for a road grader plow with an endless conveyor.

SEE OR SEARCH CLASS:

198, Conveyors: Power-Driven, subclass 307.1 for a bucket conveyor; subclasses 312+ for a conveyor shiftably mounted on a vehicle; subclass 509 for a conveyor having buckets specialized to gather load batches.

414, Material or Article Handling, subclass 398 for a power-driven conveyor for loading a wheeled vehicle; subclass 502 for a self-loading or unloading vehicle having a power-driven conveyor.

464 Having nonbucket-type digging means:
This subclass is indented under subclass 463. Apparatus including cutting or breaking implements adapted to drag the material during the excavating operation and do not have any bottom and side walls to hold the excavated material.

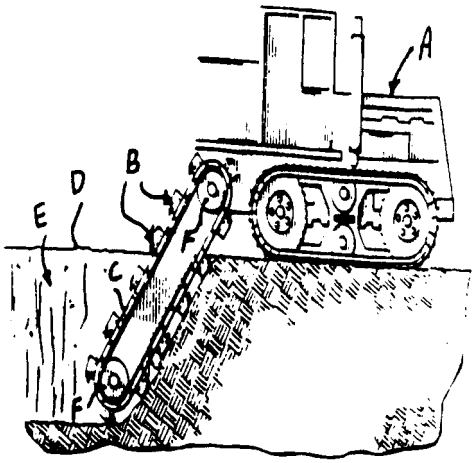

A - Tractor or prime mover; B - Digging teeth (nonbucket-type);C - Endless chain; D - Ground ; E - Ditch; F - Sprockets

SEE OR SEARCH THIS CLASS, SUBCLASS:
332, for an endless driven digging elements for a dredger.
352, for a ditcher with an endless digging means.
388, for a road grader having a transverse endless scraper.

SEE OR SEARCH CLASS:
198, Conveyors: Power-Driven, subclass 519 for a conveyor section having means which enables the section's conveying member to engage and to remain in contact with the surface of a mound or loose material.

465 Digging chain, bucket, blade, or tooth structure, per se:
This subclass is indented under subclass 462. Apparatus wherein the significance is attributed to the configuration or shape of the excavating implement or to the improved cutting effectiveness of the excavating implement or to the additional or improved support or guide means.

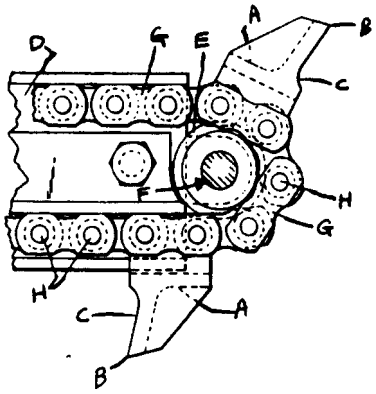

A - Digging shovel; B - Digging edge; C - Digging face; D- Guide flange; E - Sprocket; F - Sprocket shaft; G - Chain link;H - Link pins

SEE OR SEARCH THIS CLASS, SUBCLASS:
327+, for a specific cutterhead structure of a dredger.
339, for a bucket structure of a dredger.
444, for a scoop or bucket structure of an excavating and a transporting container.
455+, for a mounting or retaining means of an excavating tooth or adapter.

SEE OR SEARCH CLASS:
30, Cutlery, subclasses 381+ for a chain structure including a guide bar or guide means.
83, Cutting, subclasses 830+ for a diverse chain saw cutting element.
172, Earth Working, subclass 100 for a blade on an endless driven belt or chain.
175, Boring or Penetrating the Earth, subclasses 327+ for a cutter bit or bit element.
299, Mining or In Situ Disintegration of Hard Material, subclasses 79.1+ for a cutterhead or tooth.

466 MISCELLANEOUS:
This subclass is indented under the class definition. Apparatus not properly classifiable in any preceding subclasses of this class.

467 Handled or hand operated:
This subclass is indented under subclass 435. Apparatus wherein the scoop or bowl is adapted to be controlled at one end by a human being who walks rearwardly of the scoop or bowl and controls its operation by grasping the handlebar or similar means while the other end is connected to a suitable source of power such as a draft animal or a tractor to draw the scoop or bowl over the surface to be excavated.

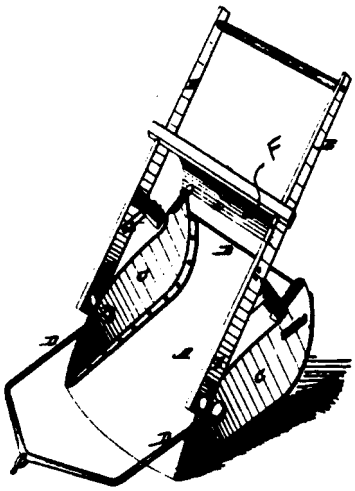

A,B,C - Bowl or scraper; D - Connection to vehicle; E - Handle;F - Apron

468 Having quick-connect coupling:
This subclass is indented under subclass 403. Apparatus including a readily separable operating device and a support device for connecting the bucket or scoop to the excavator consisting of means operable to take up a condition to retain the bucket with the excavator in engagement, or a release condition to allow the detachment of the bucket from the excavator.

SEE OR SEARCH CLASS:
403, Joints and Connections, subclasses 345+ for interfitted members.
414, Material or Article Handling, subclass 723 for means to facilitate attachment of shovel or rake to handle or boom; subclass 724 for a handling device releasably attached to a bucket or rake.

CROSS-REFERENCE ART COLLECTIONS

901 Bucket cleaners.

902 Hydraulic motors.

903 Scoop or scraper attachments.

904 Vibration means for excavating tool.

905 Nondredge excavating by fluid contact or explosion.

906 Visual aids and indicators for excavating tool.

907 Automatic leveling excavators.

908 Canal cleaners.

END