US008000000B2

(12) **United States Patent**
Greenberg et al.

(10) **Patent No.: US 8,000,000 B2**
(45) **Date of Patent: *Aug. 16, 2011**

(54) **VISUAL PROSTHESIS**

(75) Inventors: **Robert J. Greenberg**, Los Angeles, CA (US); **Kelly H. McClure**, Simi Valley, CA (US); **Arup Roy**, Valencia, CA (US)

(73) Assignee: **Second Sight Medical Products, Inc.**, Sylmar, CA (US)

(*) Notice: Subject to any disclaimer, the term of this patent is extended or adjusted under 35 U.S.C. 154(b) by 206 days.

This patent is subject to a terminal disclaimer.

(21) Appl. No.: **11/874,690**

(22) Filed: **Oct. 18, 2007**

(65) **Prior Publication Data**

US 2008/0262568 A1 Oct. 23, 2008

Related U.S. Application Data

(60) Provisional application No. 60/852,875, filed on Oct. 19, 2006.

(51) **Int. Cl.**
A61N 1/372 (2006.01)

(52) **U.S. Cl.** **607/60**; 607/53

(58) **Field of Classification Search** 623/6.63; 607/5, 17, 53–57, 62, 60
See application file for complete search history.

(56) **References Cited**

U.S. PATENT DOCUMENTS

4,573,481	A	3/1986	Bullara	
4,612,934	A *	9/1986	Borkan	607/62
4,628,933	A	12/1986	Michelson	
4,837,049	A	6/1989	Byers et al.	
5,109,844	A	5/1992	de Juan, Jr. et al.	
5,215,088	A	6/1993	Normann et al.	
5,569,307	A *	10/1996	Schulman et al.	607/56
5,935,155	A	8/1999	Humayun et al.	
6,400,989	B1	6/2002	Eckmiller	
6,458,157	B1 *	10/2002	Suaning	623/6.63
7,818,061	B1 *	10/2010	Palmer	607/32
2005/0078846	A1 *	4/2005	Single	381/326
2006/0247754	A1	11/2006	Greenberg et al.	

FOREIGN PATENT DOCUMENTS

WO WO 02/40095 A1 5/2002

OTHER PUBLICATIONS

Eugene De Juan, Retinal Tacks, American Journal of Ophthalmology 99: pp. 272-274, Mar. 1985.

* cited by examiner

Primary Examiner — Carl H Layno
Assistant Examiner — Luther Behringer
(74) *Attorney, Agent, or Firm* — Scott B. Dunbar; Alessandro Steinfl

(57) **ABSTRACT**

A visual prosthesis apparatus and a method for limiting power consumption in a visual prosthesis apparatus. The visual prosthesis apparatus comprises a camera for capturing a video image, a video processing unit associated with the camera, the video processing unit configured to convert the video image to stimulation patterns, and a retinal stimulation system configured to stop stimulating neural tissue in a subject's eye based on the stimulation patterns when an error is detected in a forward telemetry received from the video processing unit.

12 Claims, 16 Drawing Sheets

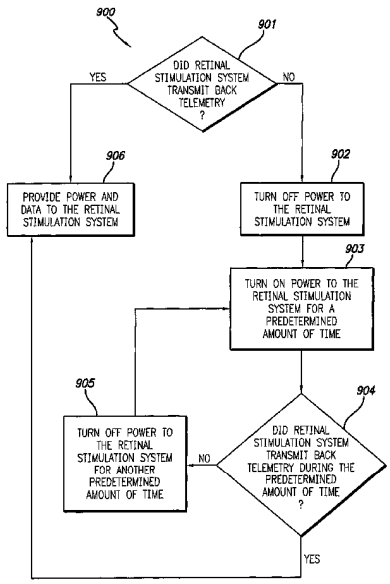

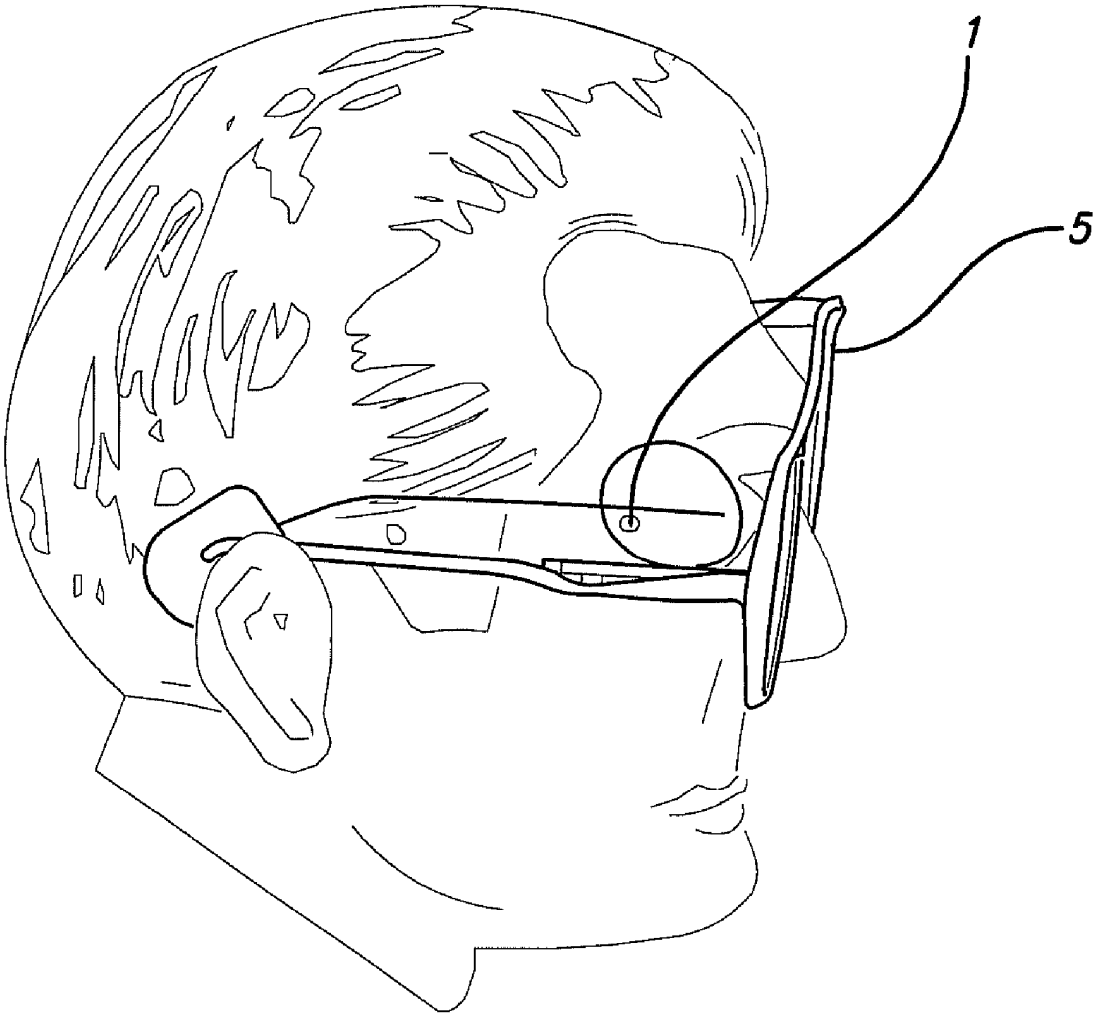

FIG. 1

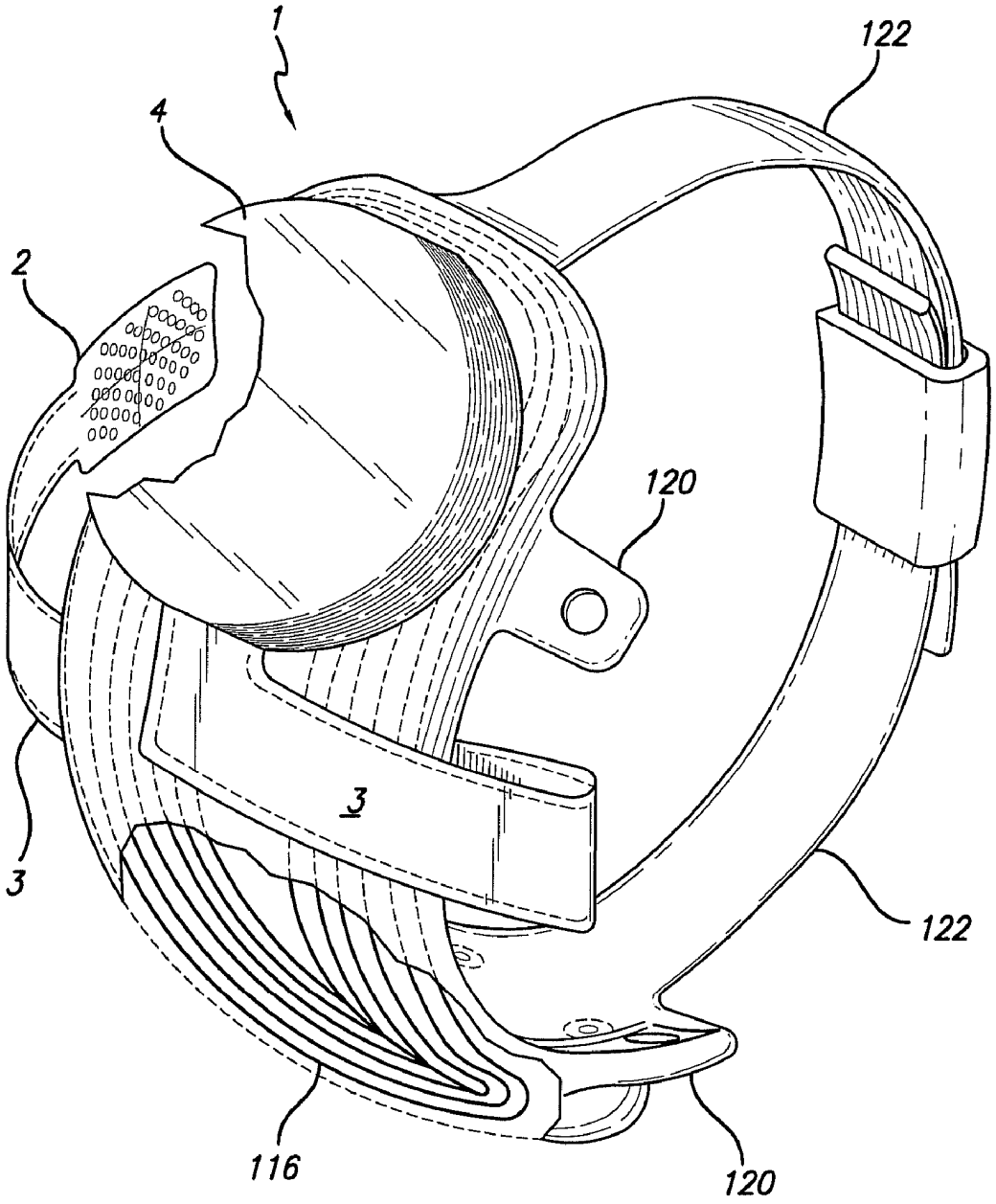

FIG. 2

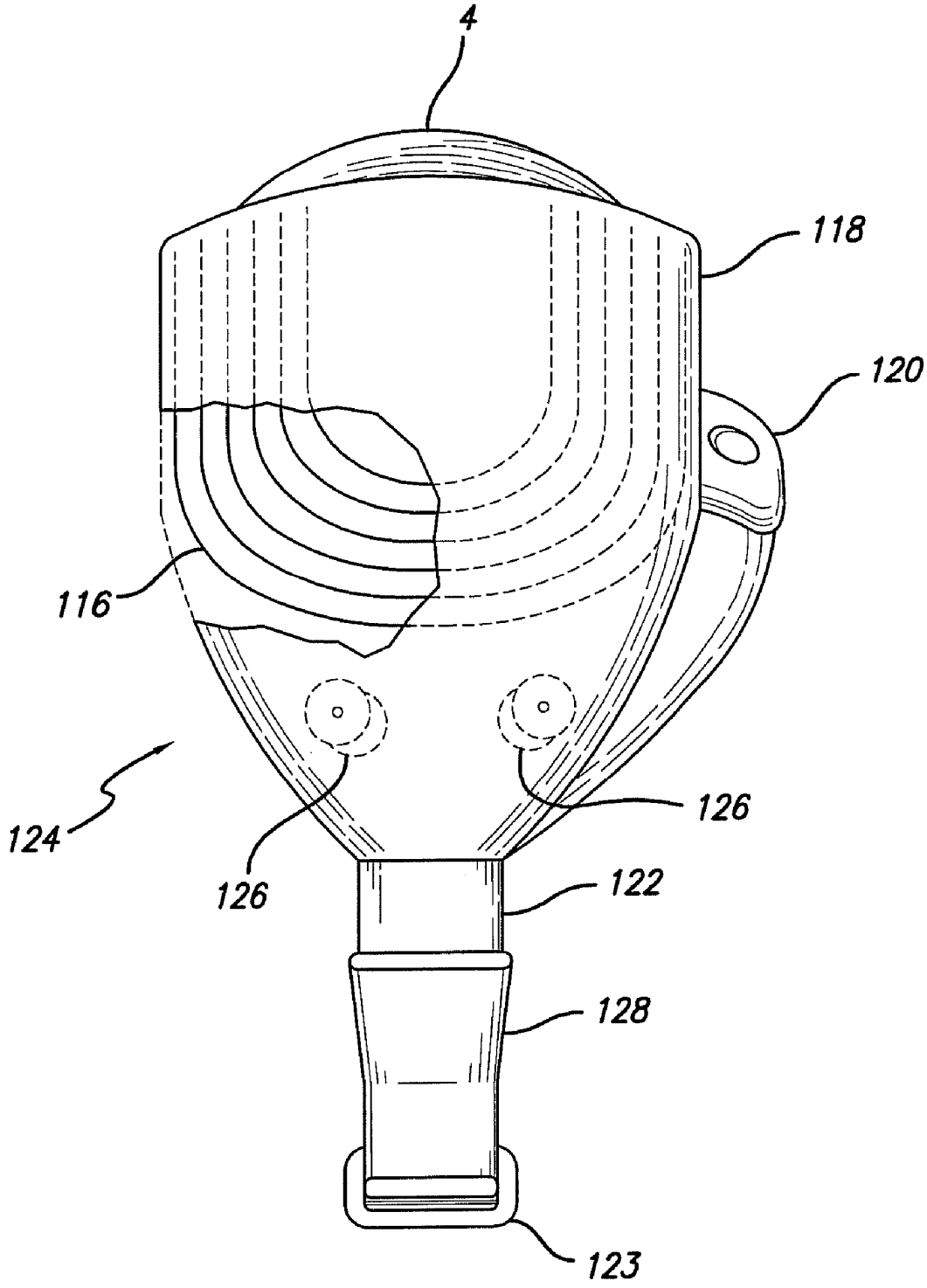

FIG. 3

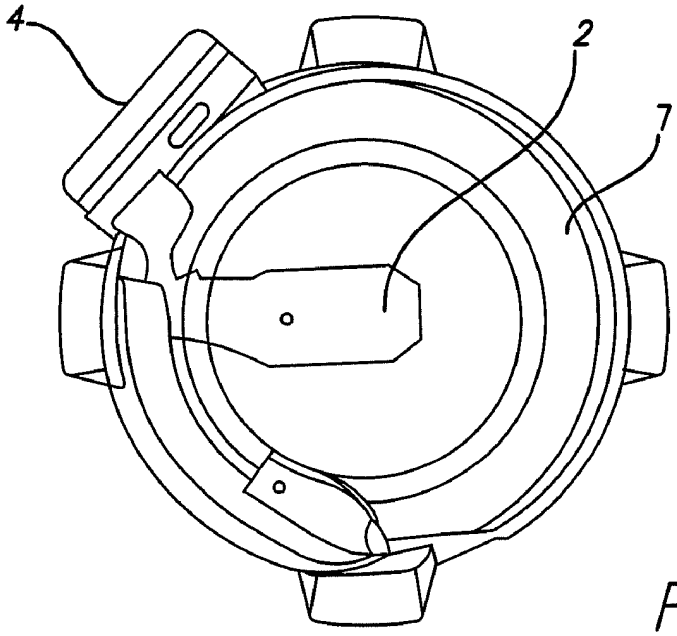

FIG. 4

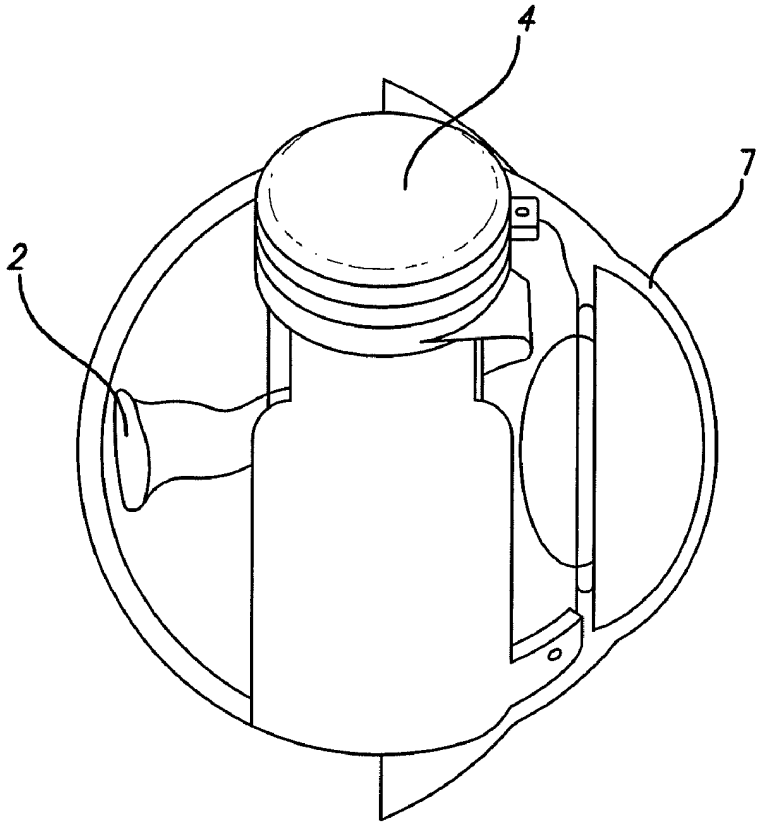

FIG. 5

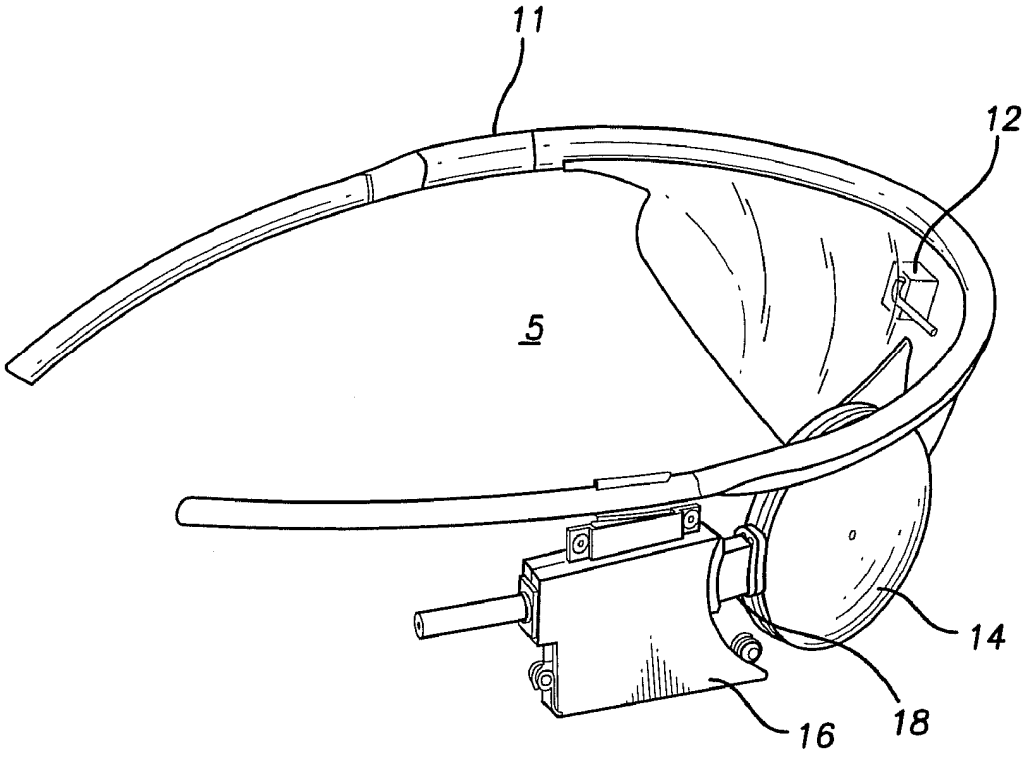

FIG. 6

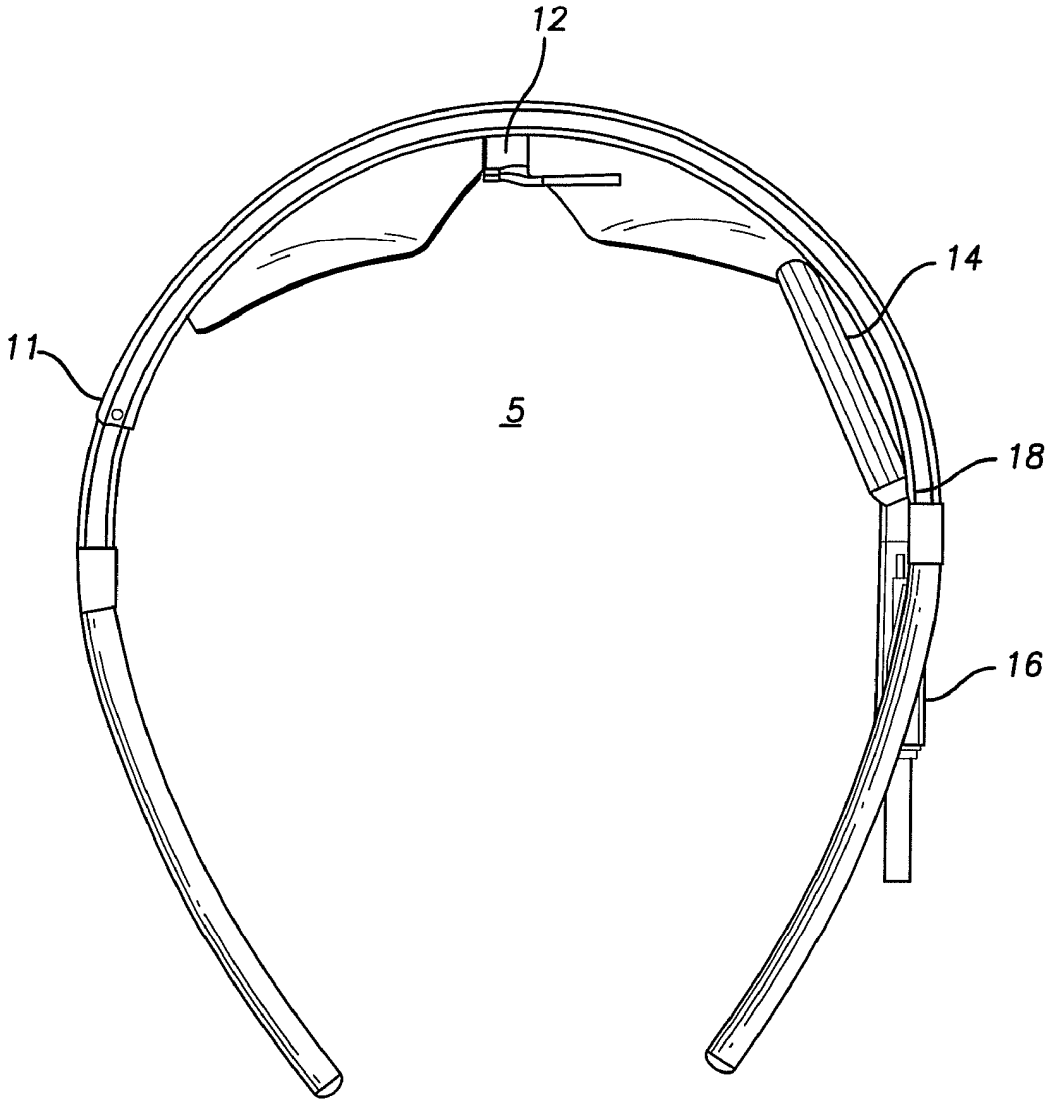

FIG. 7

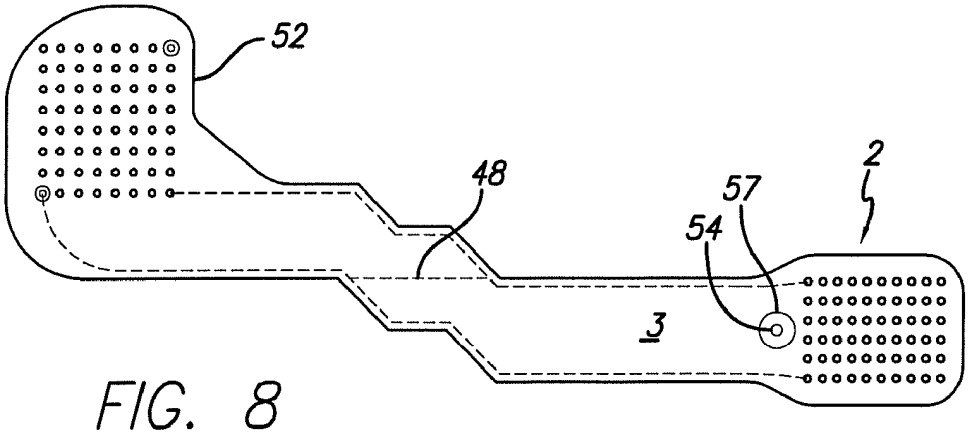

FIG. 8

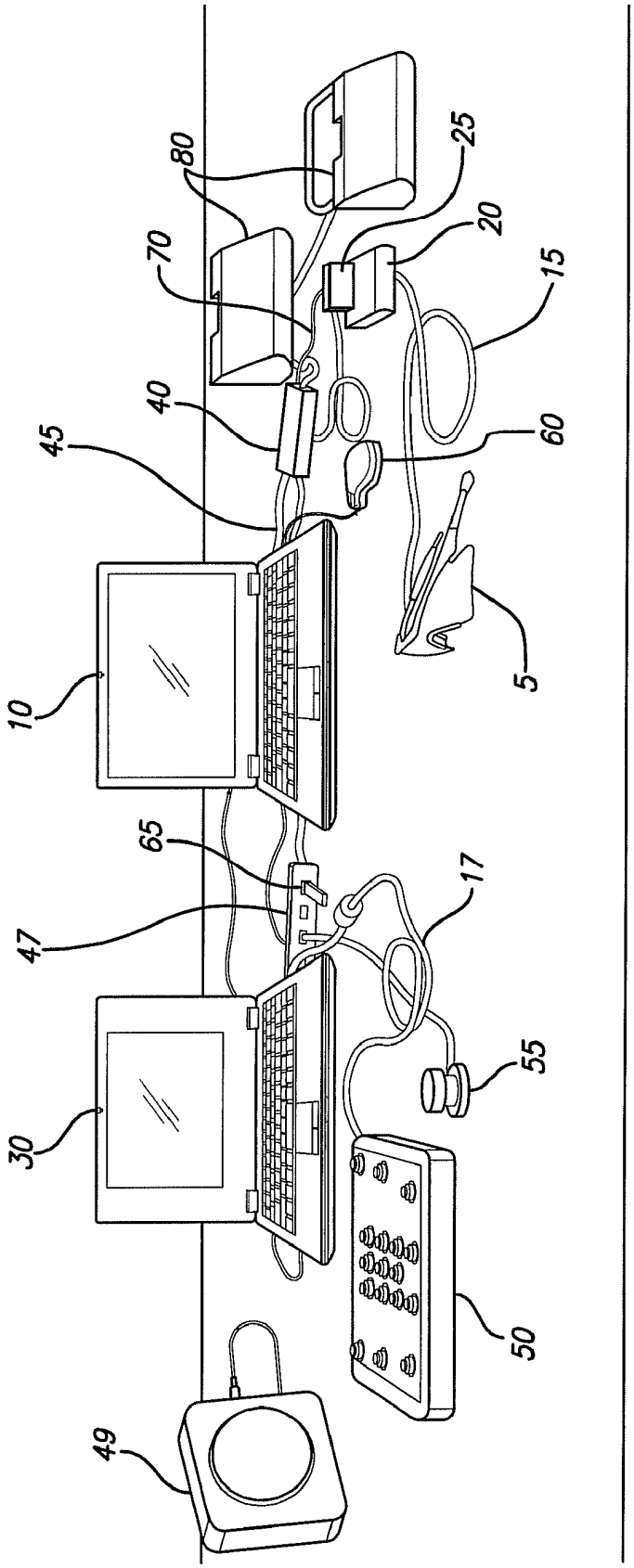

FIG. 9

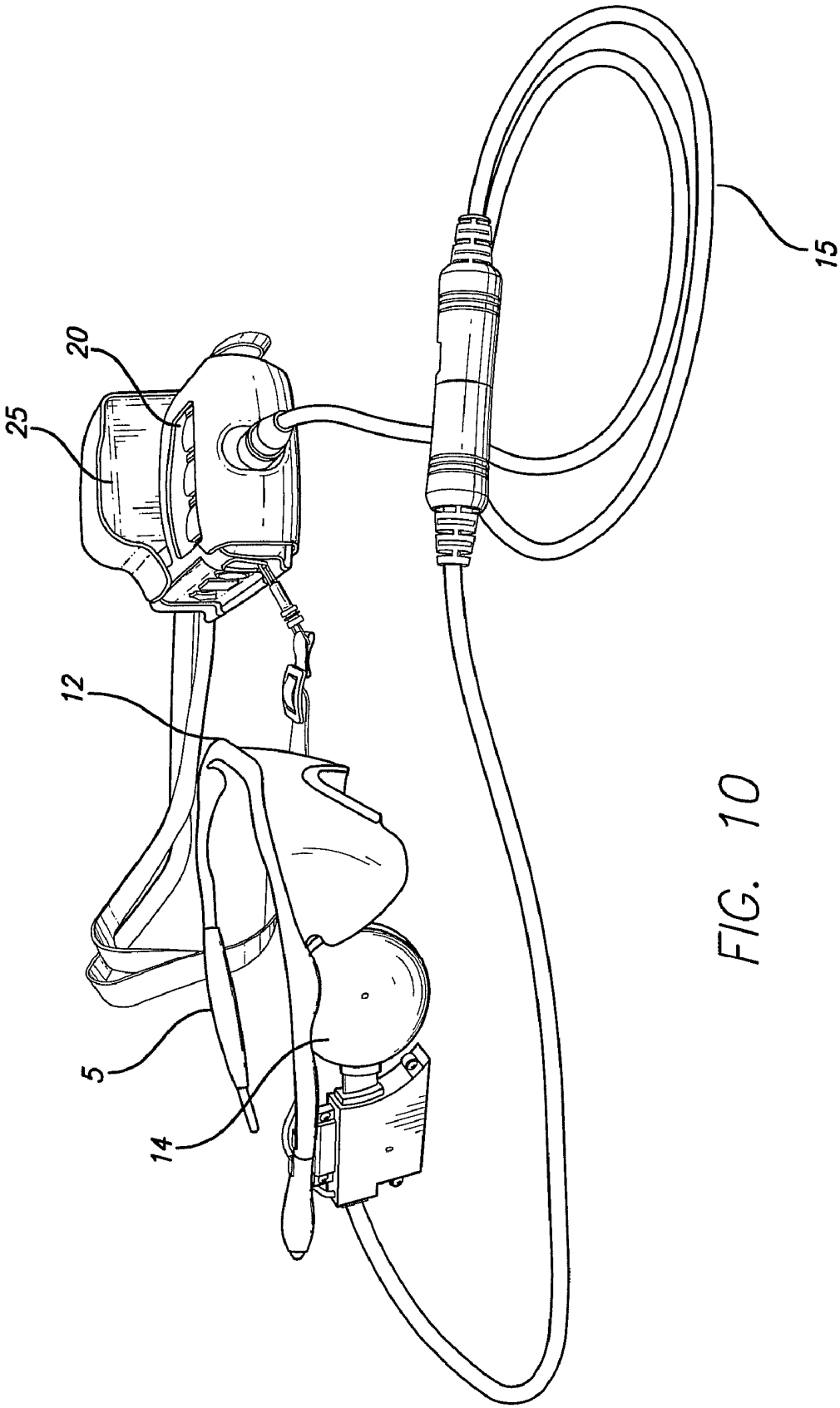

FIG. 10

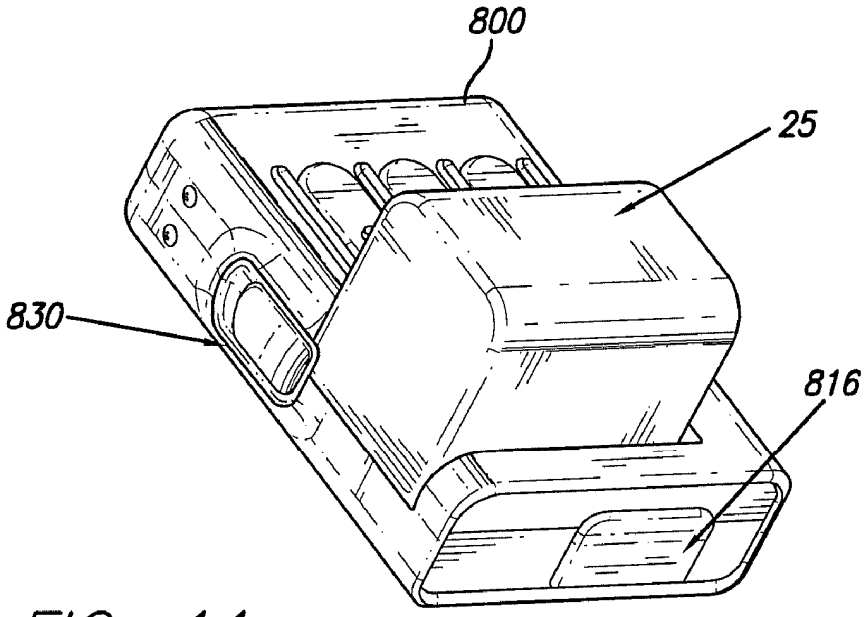
800
25
830
816

FIG. 11

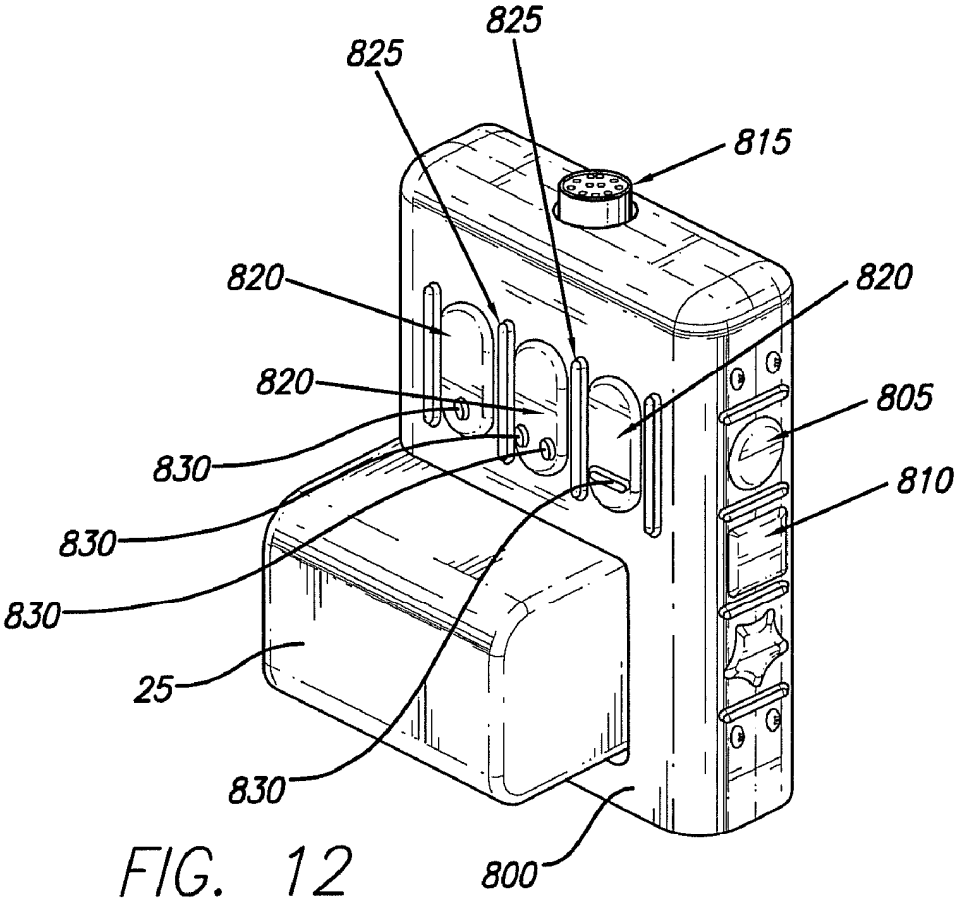
825
825
815
820
820
820
805
830
810
830
830
25
830
800

FIG. 12

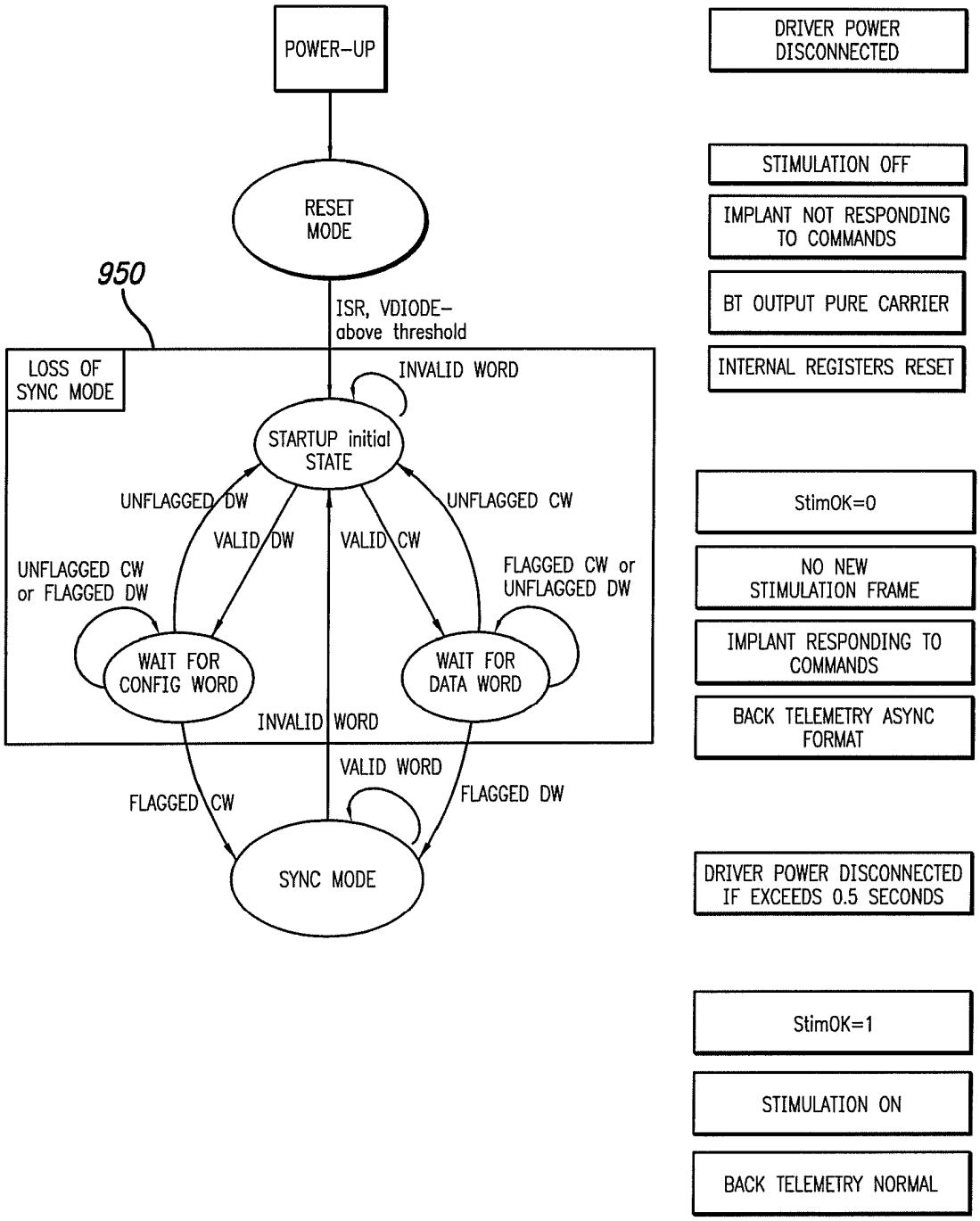
POWER-UP
DRIVER POWER DISCONNECTED
RESET MODE
STIMULATION OFF
IMPLANT NOT RESPONDING TO COMMANDS
BT OUTPUT PURE CARRIER
INTERNAL REGISTERS RESET
950
ISR, VDIODE- above threshold
LOSS OF SYNC MODE
INVALID WORD
STARTUP initial STATE
UNFLAGGED DW
UNFLAGGED CW
VALID DW
VALID CW
StimOK=0
UNFLAGGED CW or FLAGGED DW
FLAGGED CW or UNFLAGGED DW
NO NEW STIMULATION FRAME
WAIT FOR CONFIG WORD
WAIT FOR DATA WORD
IMPLANT RESPONDING TO COMMANDS
INVALID WORD
BACK TELEMETRY ASYNC FORMAT
VALID WORD
FLAGGED CW
FLAGGED DW
SYNC MODE
DRIVER POWER DISCONNECTED IF EXCEEDS 0.5 SECONDS
StimOK=1
STIMULATION ON
BACK TELEMETRY NORMAL

FIG. 13A

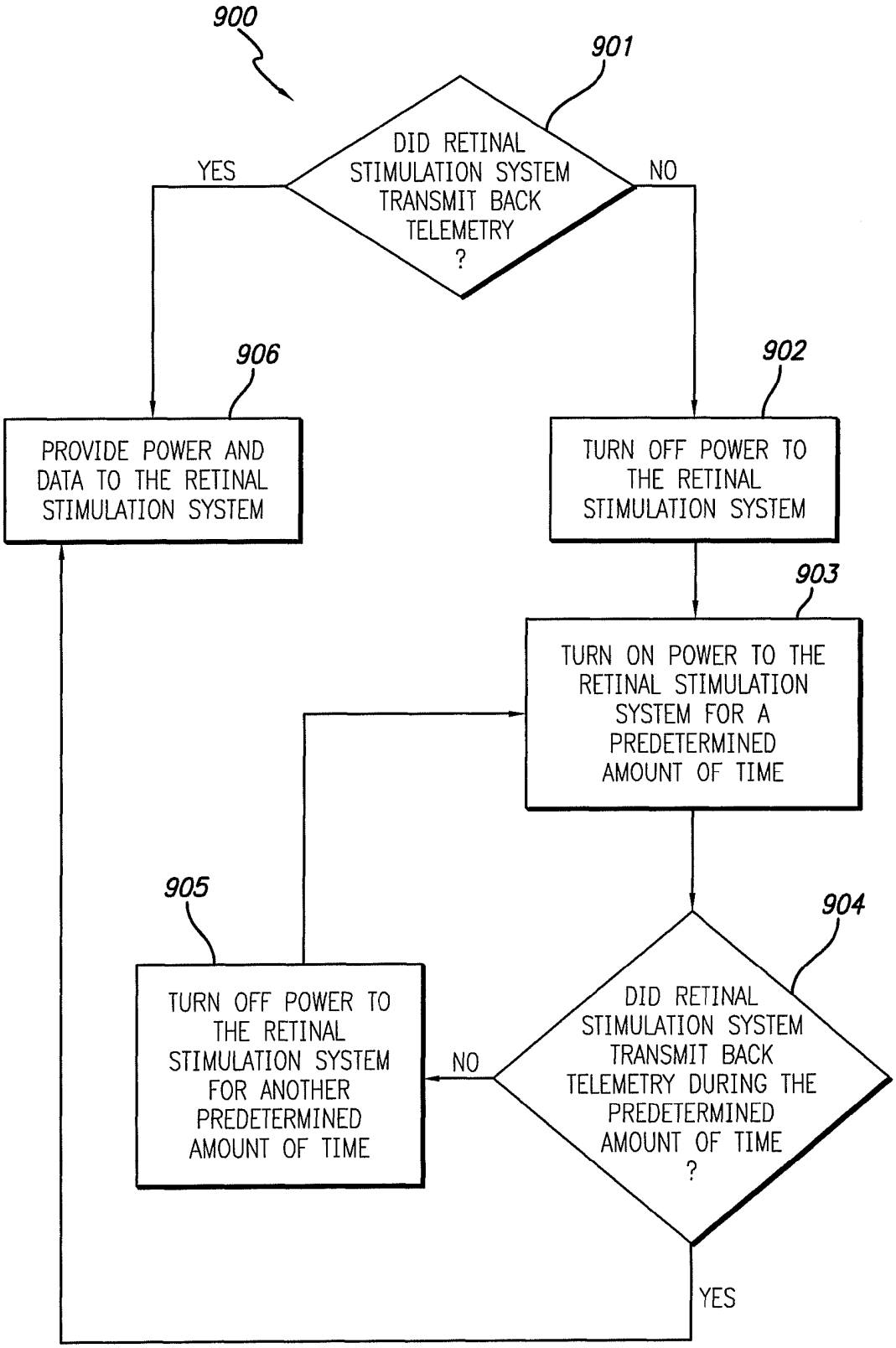
900
901
DID RETINAL STIMULATION SYSTEM TRANSMIT BACK TELEMETRY ?
YES
NO
906
PROVIDE POWER AND DATA TO THE RETINAL STIMULATION SYSTEM
902
TURN OFF POWER TO THE RETINAL STIMULATION SYSTEM
903
TURN ON POWER TO THE RETINAL STIMULATION SYSTEM FOR A PREDETERMINED AMOUNT OF TIME
905
TURN OFF POWER TO THE RETINAL STIMULATION SYSTEM FOR ANOTHER PREDETERMINED AMOUNT OF TIME
904
DID RETINAL STIMULATION SYSTEM TRANSMIT BACK TELEMETRY DURING THE PREDETERMINED AMOUNT OF TIME ?
NO
YES

FIG. 13B

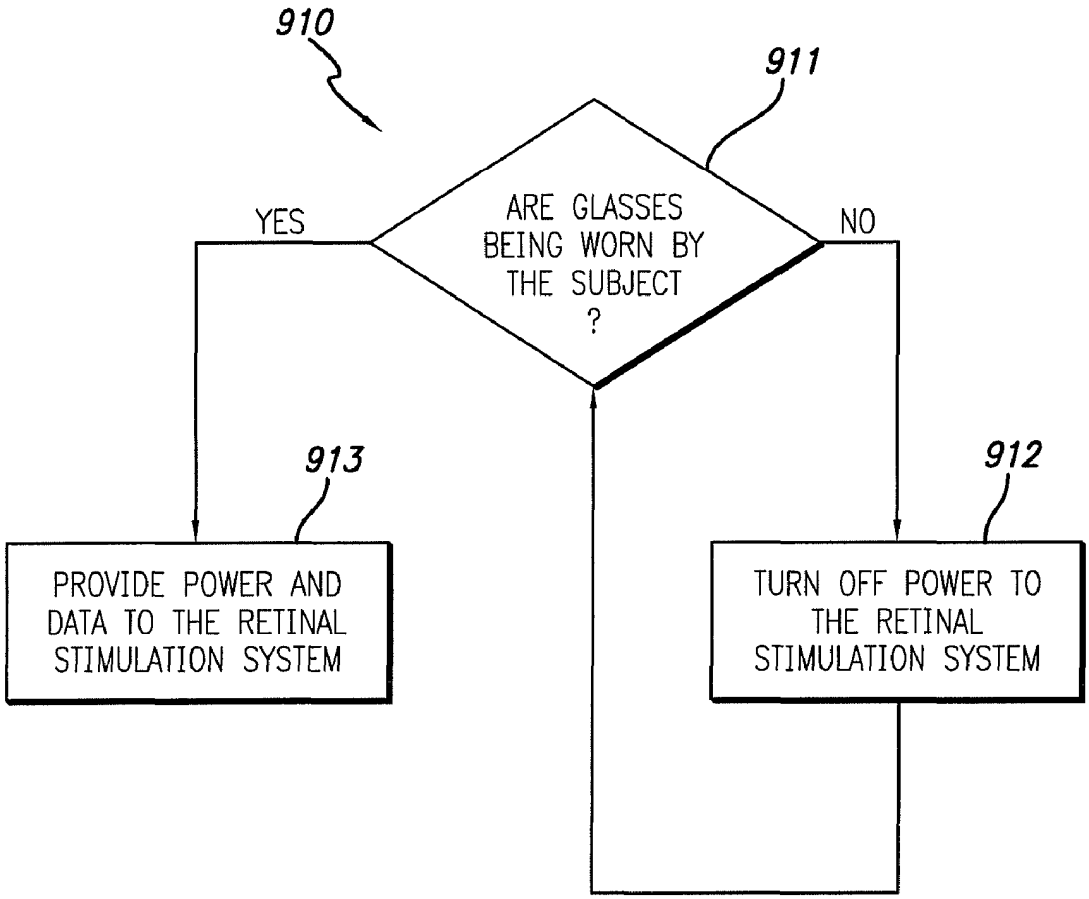
910
911
ARE GLASSES BEING WORN BY THE SUBJECT ?
YES
NO
913
PROVIDE POWER AND DATA TO THE RETINAL STIMULATION SYSTEM
912
TURN OFF POWER TO THE RETINAL STIMULATION SYSTEM

FIG. 13C

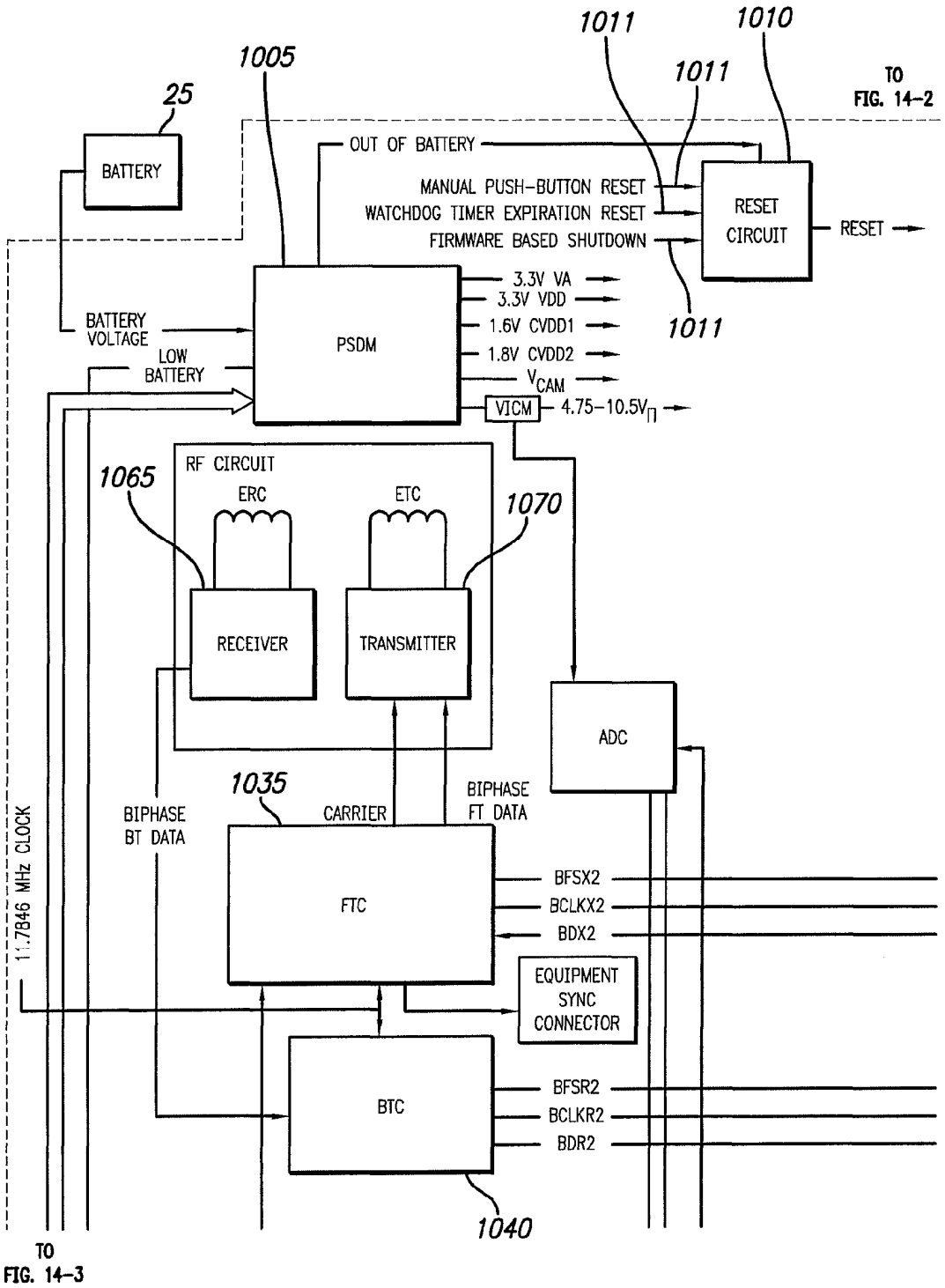
1011
1010
1005
1011
TO
FIG. 14-2
25
BATTERY
OUT OF BATTERY
MANUAL PUSH-BUTTON RESET
WATCHDOG TIMER EXPIRATION RESET
FIRMWARE BASED SHUTDOWN
RESET CIRCUIT
RESET
3.3V VA
3.3V VDD
1.6V CVDD1
1.8V CVDD2
V_{CAM}
VICM
4.75-10.5V
1011
BATTERY VOLTAGE
LOW BATTERY
PSDM
RF CIRCUIT
1065
ERC
ETC
1070
RECEIVER
TRANSMITTER
ADC
1035
BIPHASE BT DATA
CARRIER
BIPHASE FT DATA
11.7846 MHz CLOCK
FTC
BFSX2
BCLKX2
BDX2
EQUIPMENT SYNC CONNECTOR
BTC
BFSR2
BCLKR2
BDR2
1040
TO
FIG. 14-3

FIG. 14-1

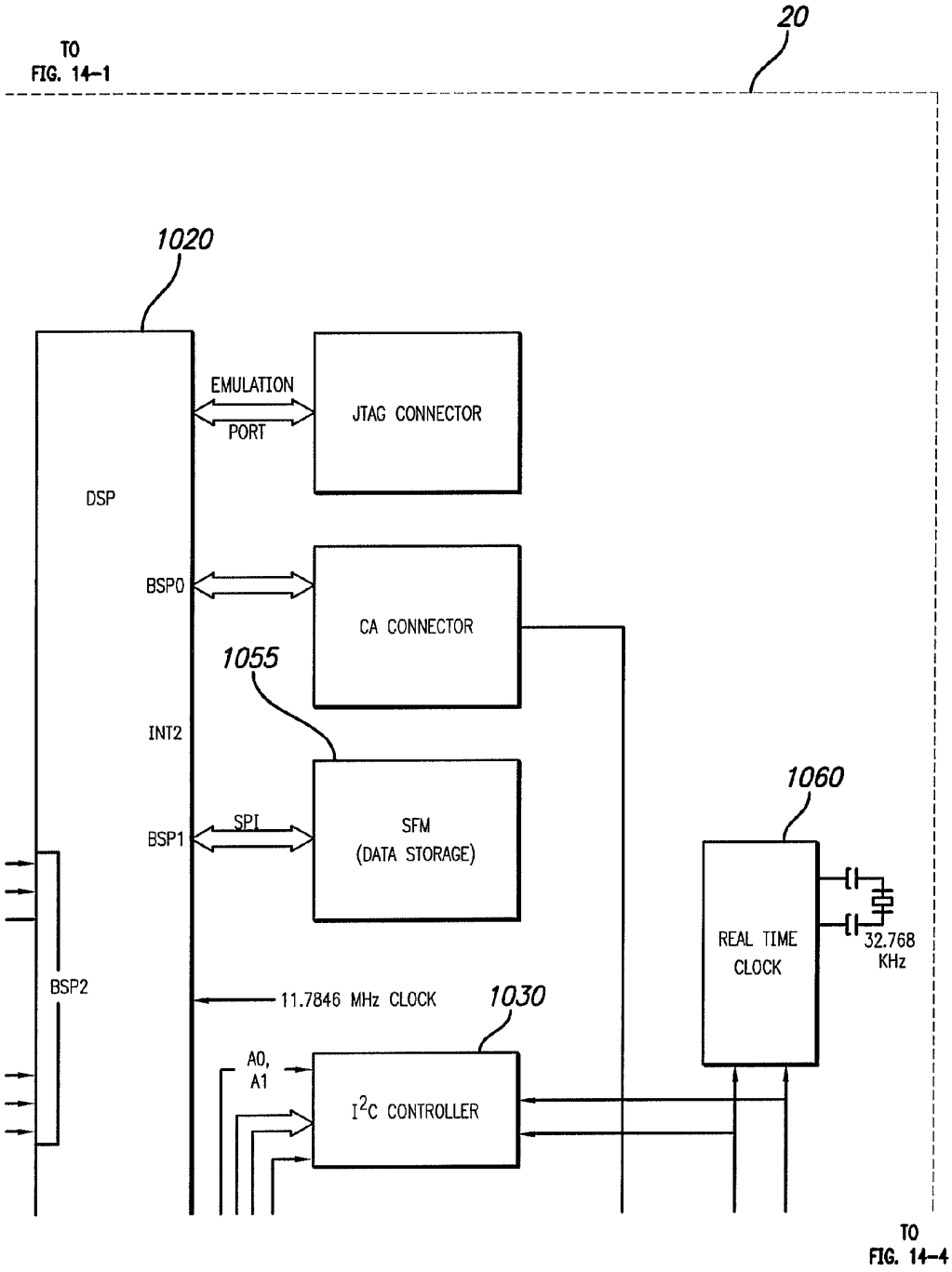
TO
FIG. 14-1
20
1020
DSP
EMULATION
PORT
JTAG CONNECTOR
BSP0
CA CONNECTOR
1055
INT2
BSP1
SPI
SFM
(DATA STORAGE)
1060
REAL TIME
CLOCK
32.768
KHz
BSP2
11.7846 MHz CLOCK
1030
A0,
A1
I2C CONTROLLER
TO
FIG. 14-4

FIG. 14-2

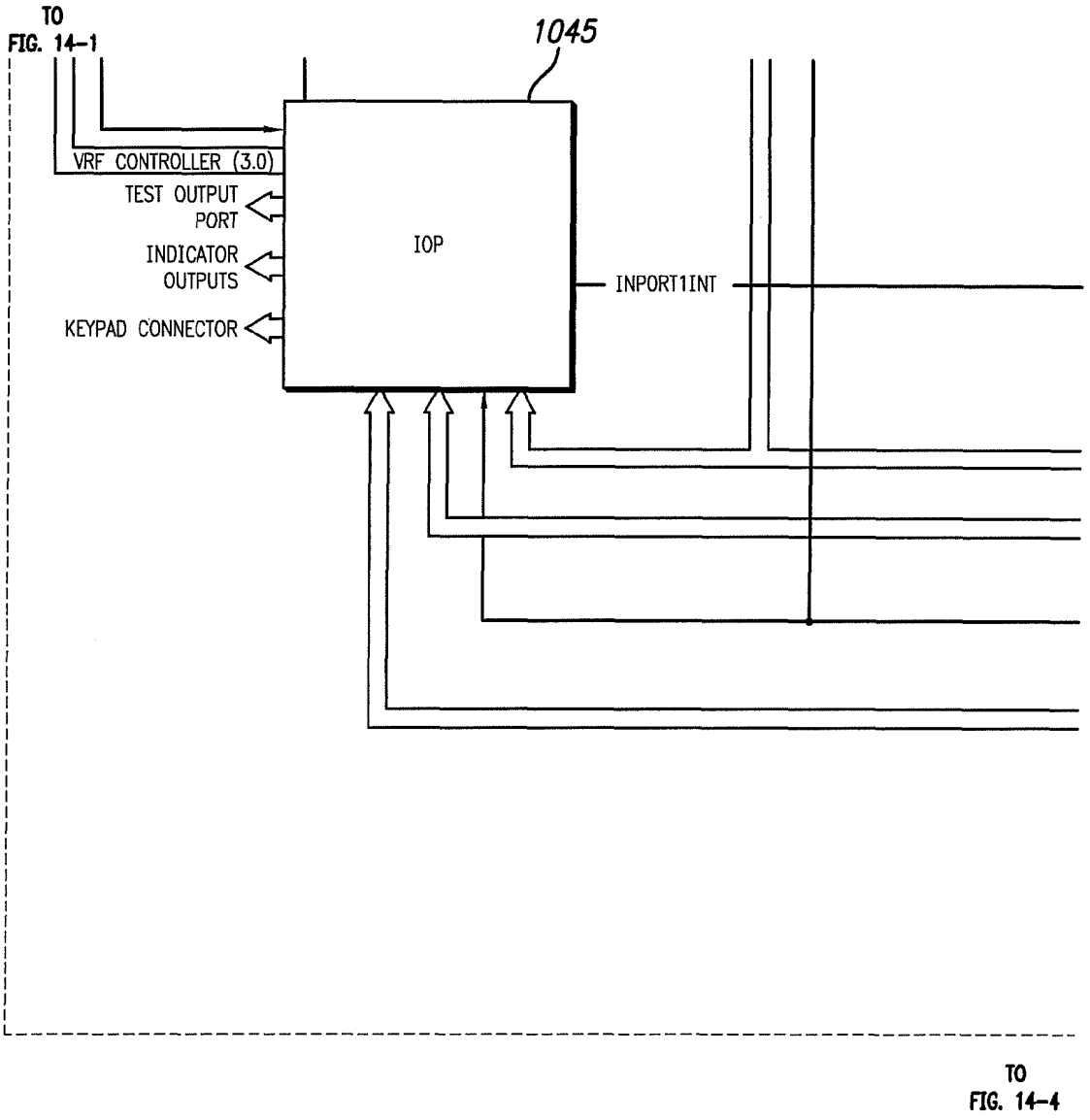
TO
FIG. 14-1
1045
VRF CONTROLLER (3.0)
TEST OUTPUT
PORT
INDICATOR
OUTPUTS
KEYPAD CONNECTOR
IOP
INPORT1INT
TO
FIG. 14-4

FIG. 14-3

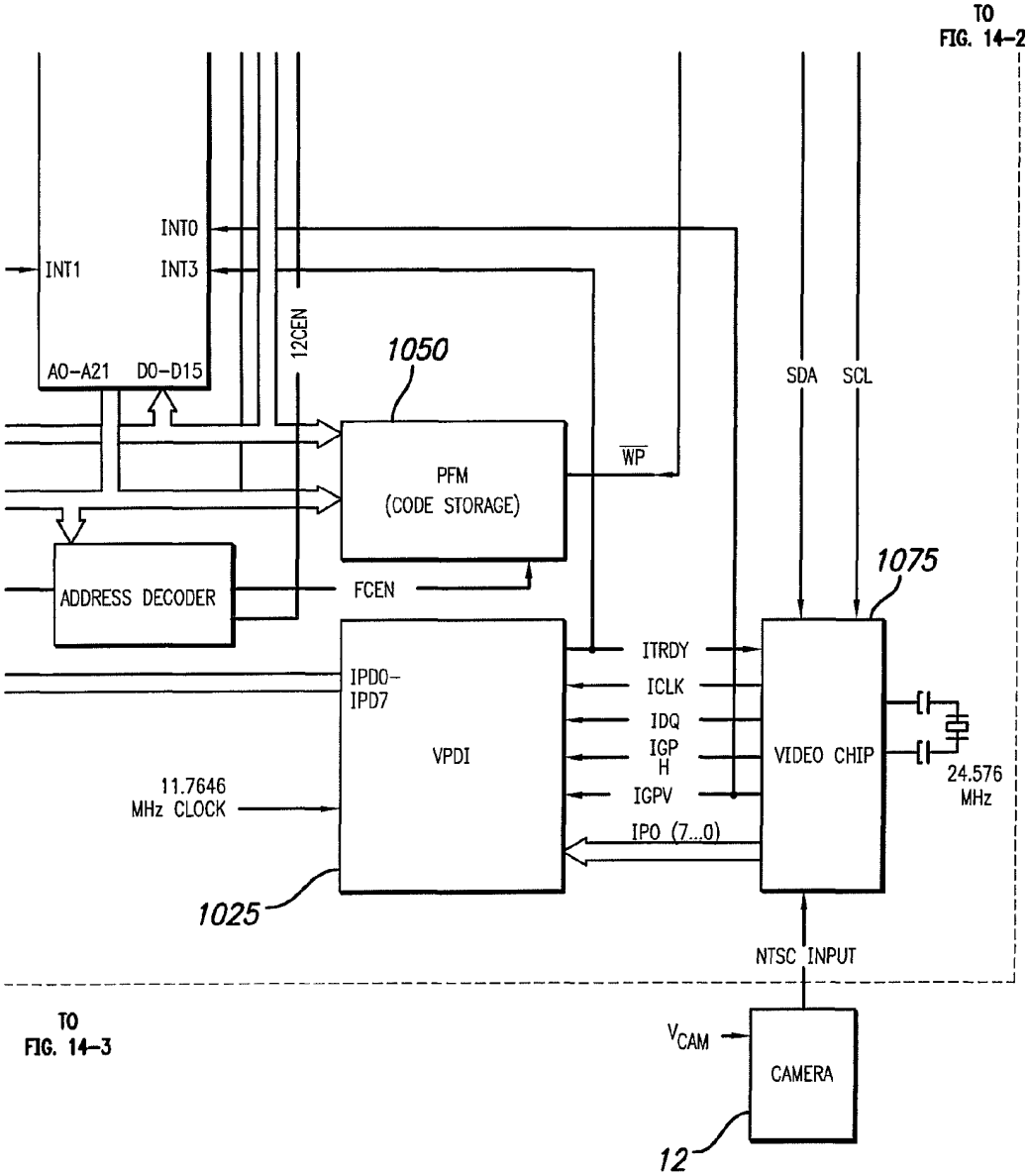
TO
FIG. 14-2
INT0
INT1
INT3
12CEN
1050
A0-A21
D0-D15
SDA
SCL
PFM
(CODE STORAGE)
WP
ADDRESS DECODER
FCEN
1075
ITRDY
IPD0-
IPD7
ICLK
IDQ
IGP
H
VPDI
VIDEO CHIP
24.576
MHz
11.7646
MHz CLOCK
IGPV
IPO (7...0)
1025
NTSC INPUT
TO
FIG. 14-3
VCAM
CAMERA
12

FIG. 14-4

VISUAL PROSTHESIS

CROSS REFERENCE TO RELATED APPLICATIONS

This application claims the benefit of U.S. provisional Patent Application Ser. No. 60/852,875, filed Oct. 19, 2006 for "Data Telemetry Security for an Implantable Device" by Robert J. Greenberg, Kelly H. McClure and Arup Roy, the disclosure of which is incorporated herein by reference.

FEDERALLY SPONSORED RESEARCH OR DEVELOPMENT

The present invention was made with support from the United States Government under Grant number R24EY12893-01, awarded by the National Institutes of Health. The United States Government has certain rights in the invention.

FIELD

The present disclosure relates to visual prostheses configured to provide neural stimulation for the creation of artificial vision.

BACKGROUND

In 1755 LeRoy passed the discharge of a Leyden jar through the orbit of a man who was blind from cataract and the patient saw "flames passing rapidly downwards." Ever since, there has been a fascination with electrically elicited visual perception. The general concept of electrical stimulation of retinal cells to produce these flashes of light or phosphenes has been known for quite some time. Based on these general principles, some early attempts at devising a prosthesis for aiding the visually impaired have included attaching electrodes to the head or eyelids of patients. While some of these early attempts met with some limited success, these early prosthetic devices were large, bulky and could not produce adequate simulated vision to truly aid the visually impaired.

In the early 1930's, Foerster investigated the effect of electrically stimulating the exposed occipital pole of one cerebral hemisphere. He found that, when a point at the extreme occipital pole was stimulated, the patient perceived a small spot of light directly in front and motionless (a phosphene). Subsequently, Brindley and Lewin (1968) thoroughly studied electrical stimulation of the human occipital (visual) cortex. By varying the stimulation parameters, these investigators described in detail the location of the phosphenes produced relative to the specific region of the occipital cortex stimulated. These experiments demonstrated: (1) the consistent shape and position of phosphenes; (2) that increased stimulation pulse duration made phosphenes brighter; and (3) that there was no detectable interaction between neighboring electrodes which were as close as 2.4 mm apart.

As intraocular surgical techniques have advanced, it has become possible to apply stimulation on small groups and even on individual retinal cells to generate focused phosphenes through devices implanted within the eye itself. This has sparked renewed interest in developing methods and apparatuses to aid the visually impaired. Specifically, great effort has been expended in the area of intraocular visual prosthesis devices in an effort to restore vision in cases where blindness is caused by photoreceptor degenerative retinal

diseases such as retinitis pigmentosa and age related macular degeneration which affect millions of people worldwide.

Neural tissue can be artificially stimulated and activated by prosthetic devices that pass pulses of electrical current through electrodes on such a device. The passage of current causes changes in electrical potentials across visual neuronal membranes, which can initiate visual neuron action potentials, which are the means of information transfer in the nervous system.

Based on this mechanism, it is possible to input information into the nervous system by coding the information as a sequence of electrical pulses which are relayed to the nervous system via the prosthetic device. In this way, it is possible to provide artificial sensations including vision.

One typical application of neural tissue stimulation is in the rehabilitation of the blind. Some forms of blindness involve selective loss of the light sensitive transducers of the retina. Other retinal neurons remain viable, however, and may be activated in the manner described above by placement of a prosthetic electrode device on the inner (toward the vitreous) retinal surface (epiretinal). This placement must be mechanically stable, minimize the distance between the device electrodes and the visual neurons, and avoid undue compression of the visual neurons.

In 1986, Bullara (U.S. Pat. No. 4,573,481) patented an electrode assembly for surgical implantation on a nerve. The matrix was silicone with embedded iridium electrodes. The assembly fit around a nerve to stimulate it.

Dawson and Radtke stimulated cat's retina by direct electrical stimulation of the retinal ganglion cell layer. These experimenters placed nine and then fourteen electrodes upon the inner retinal layer (i.e., primarily the ganglion cell layer) of two cats. Their experiments suggested that electrical stimulation of the retina with 30 to 100 uA current resulted in visual cortical responses. These experiments were carried out with needle-shaped electrodes that penetrated the surface of the retina (see also U.S. Pat. No. 4,628,933 to Michelson).

The Michelson '933 apparatus includes an array of photosensitive devices on its surface that are connected to a plurality of electrodes positioned on the opposite surface of the device to stimulate the retina. These electrodes are disposed to form an array similar to a "bed of nails" having conductors which impinge directly on the retina to stimulate the retinal cells. U.S. Pat. No. 4,837,049 to Byers describes spike electrodes for neural stimulation. Each spike electrode pierces neural tissue for better electrical contact. U.S. Pat. No. 5,215,088 to Norman describes an array of spike electrodes for cortical stimulation. Each spike pierces cortical tissue for better electrical contact.

The art of implanting an intraocular prosthetic device to electrically stimulate the retina was advanced with the introduction of retinal tacks in retinal surgery. De Juan, et al. at Duke University Eye Center inserted retinal tacks into retinas in an effort to reattach retinas that had detached from the underlying choroid, which is the source of blood supply for the outer retina and thus the photoreceptors. See, e.g., E. de Juan, et al., 99 Am. J. Opthalmol. 272 (1985). These retinal tacks have proved to be biocompatible and remain embedded in the retina, and choroid/sclera, effectively pinning the retina against the choroid and the posterior aspects of the globe. Retinal tacks are one way to attach a retinal array to the retina. U.S. Pat. No. 5,109,844 to de Juan describes a flat electrode array placed against the retina for visual stimulation. U.S. Pat. No. 5,935,155 to Humayun describes a visual prosthesis for use with the flat retinal array described in de Juan.

SUMMARY

According to a first aspect, a visual prosthesis apparatus comprising: a camera for capturing a video image; a video

processing unit associated with the camera, the video processing unit configured to convert the video image to stimulation patterns; and a retinal stimulation system configured to stop stimulating neural tissue in a subject's eye based on the stimulation patterns when an error is detected in a forward telemetry received from the video processing unit.

According to a second aspect, method for limiting power consumption in a visual prosthesis apparatus comprising a video capture device and a retinal stimulation system is disclosed, the method comprising: determining if a subject is wearing the video capture device; and transmitting power and data to the retinal stimulation system only as long as the subject is wearing the video capture device.

According to a third aspect, a method for limiting power consumption in a visual prosthesis apparatus comprising a retinal stimulation system and a video processing unit is disclosed, the method comprising: determining if the retinal stimulation system is transmitting a back telemetry to the video processing unit; and transmitting power and data to the retinal stimulation system only as long as the retinal stimulation system transmits the back telemetry.

According to a fourth aspect, a visual prosthesis apparatus comprising: a camera for capturing a video image; and a video processing unit associated with the camera and associated with a retinal stimulation system, wherein the video processing unit is configured to convert the video image to stimulation patterns and transmit the stimulation patterns to the retinal stimulation system for stimulation of neural tissue in a subject's eye, and the video processing unit is configured to stop transmitting the stimulation patterns to the retinal stimulation system when the retinal stimulation system does not transmit back telemetry or when the retinal stimulation system detects an error in a forward telemetry received from the video processing unit.

According to a fifth aspect, a method for limiting power consumption in a visual prosthesis apparatus comprising a retinal stimulation system and a video processing unit is disclosed, the method comprising: a) transmitting power and data via forward telemetry to the retinal stimulation system; b) determining if the retinal stimulation system is transmitting a back telemetry to the video processing unit; c) stop transmitting the power and the data via forward telemetry to the retinal stimulation system when the retinal stimulation system does not transmit the back telemetry; d) transmitting the power to the retinal stimulation system for a predetermined amount of time; e) determining if the retinal stimulation system is transmitting the back telemetry during the predetermined amount of time; f) stop transmitting power to the retinal stimulation system when the retinal stimulation system does not transmit the back telemetry during the predetermined amount of time; and g) repeating features d) through f) until the retinal stimulation system transmits the back telemetry.

Further embodiments are shown in the specification, drawings and claims of the present application.

BRIEF DESCRIPTION OF THE FIGURES

FIG. **1** shows a visual prosthesis apparatus according to the present disclosure.

FIGS. **2** and **3** show a retinal stimulation system adapted to be implanted into a subject.

FIG. **4** shows a front view of the implanted retinal stimulation system.

FIG. **5** shows a side view of the implanted system of FIG. **9**.

FIGS. **6** and **7** show a video capture/transmission apparatus or visor adapted to be used in combination with the retinal stimulation of FIGS. **2** and **3**.

FIG. **8** shows a flexible circuit electrode array, also shown in FIG. **2**.

FIG. **9** shows components of a fitting system according to the present disclosure, the system also comprising the visor shown in FIGS. **4** and **5**.

FIG. **10** shows the visual prosthesis apparatus in a stand-alone mode, i.e. comprising the visor connected to a video processing unit.

FIGS. **11-12** show the video processing unit already briefly shown with reference to FIG. **8**.

FIG. **13***a* shows a LOSS OF SYNC mode.

FIG. **13***b* shows an exemplary block diagram of the steps taken when VPU does not receive back telemetry from the Retinal stimulation system.

FIG. **13***c* shows an exemplary block diagram of the steps taken when the subject is not wearing Glasses.

FIGS. **14-1**, **14-2**, **14-3** and **14-4** show an exemplary embodiment of a video processing unit. FIG. **14-1** should be viewed at the left of FIG. **14-2**. FIG. **14-3** should be viewed at the left of FIG. **14-4**. FIGS. **14-1** and **14-2** should be viewed on top of FIGS. **14-3** and **14-4**.

In the following description, like reference numbers are used to identify like elements. Furthermore, the drawings are intended to illustrate major features of exemplary embodiments in a diagrammatic manner. The drawings are not intended to depict every feature of every implementation nor relative dimensions of the depicted elements, and are not drawn to scale.

DETAILED DESCRIPTION

The present disclosure is concerned with a visual apparatus and a method for creation of artificial vision. In particular, the present disclosure provides an interface and method for controlling a visual prosthesis (i.e. device) implanted in an individual patient (i.e. subject) to create artificial vision.

FIG. **1** shows a visual prosthesis apparatus. The visual apparatus comprises, in combination, an implantable retinal stimulation system **1** and a video capture/transmission apparatus or visor embodied in visor/Glasses **5**. An exemplary retinal stimulation system **1** is shown in more detail in FIGS. **2** and **3** and an exemplary visor **5** is shown in more detail in FIGS. **6** and **7**.

The retinal stimulation system **1** is further disclosed in U.S. application Ser. No. 11/207,644, filed Aug. 19, 2005 for "Flexible Circuit Electrode Array" by Robert J. Greenberg, et al. incorporated herein by reference, and is intended for use in subjects with retinitis pigmentosa. The visor **5** is further disclosed in International Patent Application No. PCT/US07/13918, filed on Jun. 14, 2007 and entitled "APPARATUS AND METHOD FOR ELECTRICAL STIMULATION OF HUMAN RETINA," also incorporated herein by reference.

The exemplary retinal stimulation system **1**, shown in FIGS. **2** and **3**, is an implantable electronic device containing an inductive coil **116** and an electrode array **2** that is electrically coupled by a cable **3** that pierces sclera of the subject's eye to an electronics package **4**, external to the sclera. The retinal stimulation system **1** is designed, for example, to elicit visual percepts in blind subjects with retinitis pigmentosa.

Human vision provides a field of view that is wider than it is high. This is partially due to fact that we have two eyes, but even a single eye provides a field of view that is approximately 90° high and 140° to 160° degrees wide. It is therefore, advantageous to provide a flexible circuit electrode array **2**

that is wider than it is tall. This is equally applicable to a cortical visual array. In which case, the wider dimension is not horizontal on the visual cortex, but corresponds to horizontal in the visual scene.

FIG. **8** shows the flexible circuit electrode array **2** prior to folding and attaching to the electronics package **4** of FIG. **2**. At one end of the flexible circuit cable **3** is an interconnection pad **52** for connection to the electronics package **4**. At the other end of the flexible circuit cable **3** is the flexible circuit electrode array **2**. Further, an attachment point **54** may be provided near the flexible circuit electrode array **2**. A retina tack (not shown) is placed through the attachment point **54** to hold the flexible circuit electrode array **2** to the retina. A stress relief **57** may be provided surrounding the attachment point **54**. The stress relief **57** may be made of a softer polymer than the flexible circuit, or it may include cutouts or thinning of the polymer to reduce the stress transmitted from the retina tack to the flexible circuit electrode array **2**. The flexible circuit cable **3** may be formed in a dog leg pattern so than when it is folded at fold **48** it effectively forms a straight flexible circuit cable **3** with a narrower portion at the fold **48** for passing through the sclerotomy. The electrode array **2** may comprise a polyimide cable that houses wire conductors and an array of exposed platinum electrodes in a grid. In one embodiment, there are sixty electrodes arranged in a 6×10 grid.

The electronics package **4** of FIGS. **2** and **3** can be electrically coupled to the inductive coil **116**. In one aspect, the inductive coil **116** contains a receiver and transmitter antennae made from wound wire. Alternatively, the inductive coil **116** may be made from a thin film polymer sandwich with wire traces deposited between layers of thin film polymer. The electronics package **4** may contain components and an Application Specific Integrated Circuit (ASIC) for processing the received data and using the received power to generate the required stimulation output. The electronics package **4** and the inductive coil **116** may be held together by a molded body **118** shown in FIG. **3**. As also shown in FIG. **3**, the molded body **118** may also include suture tabs **120** shown in FIG. **3**. The molded body narrows to form a strap **122** which surrounds the sclera and holds the molded body **118**, inductive coil **116**, and electronics package **4** in place. The molded body **118**, suture tabs **120** and strap **122** are preferably an integrated unit made of silicone elastomer. Silicone elastomer can be formed in a pre-curved shape to match the curvature of a typical sclera. Furthermore, silicone remains flexible enough to accommodate implantation and to adapt to variations in the curvature of an individual sclera. In one aspect, the inductive coil **116** and molded body **118** are oval shaped, and in this way, a strap **122** can better support the oval shaped coil.

The eye moves constantly. The eye moves to scan a scene and also has a jitter motion to prevent image stabilization. Even though such motion is useless in the blind, it often continues long after a person has lost their sight. Thus, in one embodiment of the present disclosure, the entire retinal stimulation system **1** of the prosthesis is attached to and supported by the sclera of a subject. By placing the device under the rectus muscles with the electronics package in an area of fatty tissue between the rectus muscles, eye motion does not cause any flexing which might fatigue, and eventually damage, the device.

FIG. **3** shows a side view of the retinal stimulation system **1**, in particular, emphasizing the fan tail **124**. When the retinal prosthesis is implanted, the strap **122** is passed under the eye muscles to surround the sclera. The inductive coil **116** and molded body **118** should also follow the strap under the lateral rectus muscle on the side of the sclera. The retinal stimulation system **1** of the visual prosthesis apparatus is very delicate. It is easy to tear the molded body **118** or break wires in the inductive coil **116**. In order to allow the molded body **118** to slide smoothly under the lateral rectus muscle, the molded body is shaped in the form of a fan tail **124** on the end opposite the electronics package **4**. Element **123** shows a retention sleeve, while elements **126** and **128** show holes for surgical positioning and a ramp for surgical positioning, respectively.

FIGS. **4** and **5** show front and side views of the Retinal stimulation system **1** implanted with respect to the subject's eye **7**. As shown in FIGS. **4** and **5**, the electrode array **2** enters the eye through a pars plana incision and is placed on the retina over the fovea using a retinal tack. The remaining Retinal stimulation system **1** is secured to the eye by means of a scleral band held in place by a Watzke sleeve (typical of scleral procedures), and also by suture tabs. Additionally, another suture may be placed around the scleral band in the inferior medial quadrant of the eye.

Referring to FIGS. **6** and **7**, the glasses **5** may comprise, for example, a frame **11** holding a camera **12**, an external coil **14** and a mounting system **16** for the external coil **14**. The mounting system **16** may also enclose the RF circuitry. In this configuration, the video camera **12** captures live video. The video signal is sent to an external Video Processing Unit (VPU) **20** (shown in FIGS. **9**, **11** and **12** and discussed below), which processes the video signal and subsequently transforms the processed video signal into electrical stimulation patterns or data. The electrical stimulation data are then sent to the external coil **14** that sends both data and power via radio-frequency (RF) telemetry to the coil **116** of the retinal stimulation system **1**, shown in FIGS. **2** and **3**. The coil **116** receives the RF commands which control the application specific integrated circuit (ASIC) which in turn delivers stimulation to the retina of the subject via a thin film electrode array (TFEA). In one aspect of an embodiment, light amplitude is recorded by the camera **12**. The VPU **20** may use a logarithmic encoding scheme to convert the incoming light amplitudes into the electrical stimulation patterns or data. These electrical stimulation patterns or data may then be passed on to the Retinal Stimulation System **1**, which results in the retinal cells being stimulated via the electrodes in the electrode array **2** (shown in FIGS. **2**, **3** and **8**). In one exemplary embodiment, the electrical stimulation patterns or data being transmitted by the external coil **14** is binary data. The external coil **14** may contain a receiver and transmitter antennae and a radio-frequency (RF) electronics card for communicating with the internal coil **116**.

Referring to FIG. **9**, a Fitting System (FS) may be used to configure and optimize the visual prosthesis apparatus shown in FIG. **1**. The Fitting System is fully described in the related application U.S. application Ser. No. 11/796,425, filed on Apr. 27, 2007, which is incorporated herein by reference in its entirety.

The Fitting System may comprise custom software with a graphical user interface running on a dedicated laptop computer **10**. Within the Fitting System are modules for performing diagnostic checks of the implant, loading and executing video configuration files, viewing electrode voltage waveforms, and aiding in conducting psychophysical experiments. A video module can be used to download a video configuration file to the Video Processing Unit (VPU) **20** discussed above and store it in non-volatile memory to control various aspects of video configuration, e.g. the spatial relationship between the video input and the electrodes. The software can also load a previously used video configuration file from the VPU **20** for adjustment.

The Fitting System can be connected to the Psychophysical Test System (PTS), located for example on a dedicated laptop **30**, in order to run psychophysical experiments. In psychophysics mode, the Fitting System enables individual electrode control, permitting clinicians to construct test stimuli with control over current amplitude, pulse-width, and frequency of the stimulation. In addition, the psychophysics module allows the clinician to record subject responses. The PTS may include a collection of standard psychophysics experiments developed using for example MATLAB® (MathWorks®) software and other tools to allow the clinicians to develop customized psychophysics experiment scripts.

Using the psychophysics module, important perceptual parameters such as perceptual threshold, maximum comfort level, and spatial location of percepts may be reliably measured. Based on these perceptual parameters, the fitting software enables custom configuration of the transformation between video image and spatio-temporal electrode stimulation parameters in an effort to optimize the effectiveness of the retinal prosthesis for each subject.

The Fitting System laptop **10** of FIG. **9** may be connected to the VPU **20** using an optically isolated serial connection adapter **40**. Because it is optically isolated, the serial connection adapter **40** assures that no electric leakage current can flow from the Fitting System laptop **10** in the event of a fault condition.

As shown in FIG. **9**, the following components may be used with the Fitting System according to the present disclosure. The Video Processing Unit (VPU) **20** for the subject being tested, a Charged Battery **25** for VPU **20**, the Glasses **5**, a Fitting System (FS) Laptop **10**, a Psychophysical Test System (PTS) Laptop **30**, a PTS CD (not shown), a Communication Adapter (CA) **40**, a USB Drive (Security) (not shown), a USB Drive (Transfer) **47**, a USB Drive (Video Settings) (not shown), a Patient Input Device (RF Tablet) **50**, a further Patient Input Device (Jog Dial) **55**, Glasses Cable **15**, CA-VPU Cable **70**, FS-CA Cable **45**, FS-PTS Cable **46**, Four (4) Port USB Hub **47**, Mouse **60**, Test Array system **80**, Archival USB Drive **49**, an Isolation Transformer (not shown), adapter cables (not shown), and an External Monitor (not shown).

With continued reference to FIG. **9**, the external components of the Fitting System may be configured as follows. The battery **25** is connected with the VPU **20**. The PTS Laptop **30** is connected to FS Laptop **10** using the FS-PTS Cable **46**. The PTS Laptop **30** and FS Laptop **10** are plugged into the Isolation Transformer (not shown) using the Adapter Cables (not shown). The Isolation Transformer is plugged into the wall outlet. The four (4) Port USB Hub **47** is connected to the FS laptop **10** at the USB port. The mouse **60** and the two Patient Input Devices **50** and **55** are connected to four (4) Port USB Hubs **47**. The FS laptop **10** is connected to the Communication Adapter (CA) **40** using the FS-CA Cable **45**. The CA **40** is connected to the VPU **20** using the CA-VPU Cable **70**. The Glasses **5** are connected to the VPU **20** using the Glasses Cable **15**.

In one exemplary embodiment, the Fitting System shown in FIG. **9** may be used to configure system stimulation parameters and video processing strategies for each subject outfitted with the visual prosthesis apparatus of FIG. **1**. The fitting application, operating system, laptops **10** and **30**, isolation unit and VPU **20** may be tested and configuration controlled as a system. The software provides modules for electrode control, allowing an interactive construction of test stimuli with control over amplitude, pulse width, and frequency of the stimulation waveform of each electrode in the Retinal stimulation system **1**. These parameters are checked to ensure that maximum charge per phase limits, charge balance, and power limitations are met before the test stimuli are presented to the subject. Additionally, these parameters may be checked a second time by the VPU **20**'s firmware. The Fitting System shown in FIG. **9** may also provide a psychophysics module for administering a series of previously determined test stimuli to record subject's responses. These responses may be indicated by a keypad **50** and/or verbally. The psychophysics module may also be used to reliably measure perceptual parameters such as perceptual threshold, maximum comfort level, and spatial location of percepts. These perceptual parameters may be used to custom configure the transformation between the video image and spatio-temporal electrode stimulation parameters thereby optimizing the effectiveness of the visual prosthesis for each subject. The Fitting System is fully described in the related application U.S. application Ser. No. 11/796,425, filed on Apr. 27, 2007, which is incorporated herein by reference in its entirety.

The visual prosthesis apparatus of FIG. **1** may operate in two modes: i) stand-alone mode and ii) communication mode.

Stand-Alone Mode

Referring to FIGS. **1**, **2** and **10**, in the stand-alone mode, the video camera **12**, on the glasses **5**, captures a video image that is sent to the VPU **20**. The VPU **20** processes the image from the camera **12** and transforms it into electrical stimulation patterns that are transmitted to the external coil **14**. The external coil **14** sends the electrical stimulation patterns and power via radio-frequency (RF) telemetry to the implanted retinal stimulation system **1** (FIGS. **2** and **3**). The internal coil **116** of the retinal stimulation system **1** receives the RF commands from the external coil **14** and transmits them to the electronics package **4** that in turn delivers stimulation to the retina via the electrode array **2**. Additionally, the retinal stimulation system **1** may communicate safety and operational status back to the VPU **20** by transmitting RF telemetry from the internal coil **116** to the external coil **14**. The visual prosthesis apparatus of FIG. **1** may be configured to electrically activate the retinal stimulation system **1** only when it is powered by the VPU **20** through the external coil **14**. The stand-alone mode may be used for clinical testing and/or at-home use by the subject.

Communication Mode

The communication mode may be used for diagnostic testing, psychophysical testing, patient fitting and downloading of stimulation settings to the VPU **20** before transmitting data from the VPU **20** to the retinal stimulation system **1** as is done for example in the stand-alone mode described above. Referring to FIG. **9**, in the communication mode, the VPU **20** is connected to the Fitting System laptop **10** using cables **70**, **45** and the optically isolated serial connection adapter **40**. In this mode, laptop **10** generated stimuli may be presented to the subject and programming parameters may be adjusted and downloaded to the VPU **20**. The Psychophysical Test System (PTS) laptop **30** connected to the Fitting System laptop **10** may also be utilized to perform more sophisticated testing and analysis as fully described in the related application U.S. application Ser. No. 11/796,425, filed on Apr. 27, 2007, which is incorporated herein by reference in its entirety.

In one embodiment, the functionality of the retinal stimulation system **1** can also be tested pre-operatively and intra-operatively (i.e. before operation and during operation) by using an external coil **14**, without the glasses **5**, placed in close proximity to the retinal stimulation system **1**. The coil **14** may communicate the status of the retinal stimulation system **1** to the VPU **20** that is connected to the Fitting System laptop **10** as shown in FIG. **9**.

As discussed above, the VPU **20** processes the image from the camera **12** and transforms the image into electrical stimulation patterns for the retinal stimulation system **1**. Filters such as edge detection filters may be applied to the electrical stimulation patterns for example by the VPU **20** to generate, for example, a stimulation pattern based on filtered video data that the VPU **20** turns into stimulation data for the retinal stimulation system **1**. The images may then be reduced in resolution using a downscaling filter. In one exemplary embodiment, the resolution of the image may be reduced to match the number of electrodes in the electrode array **2** of the retinal stimulation system **1**. That is, if the electrode array has, for example, sixty electrodes, the image may be reduced to a sixty channel resolution. After the reduction in resolution, the image is mapped to stimulation intensity using for example a look-up table that has been derived from testing of individual subjects. Then, the VPU **20** transmits the stimulation parameters via forward telemetry to the retinal stimulation system **1** in frames that may employ a cyclic redundancy check (CRC) error detection scheme.

In one exemplary embodiment, the VPU **20** may be configured to allow the subject/patient i) to turn the visual prosthesis apparatus on and off, ii) to manually adjust settings, and iii) to provide power and data to the retinal stimulation system **1**. Referring to FIGS. **11** and **12**, the VPU **20** may comprise a case **800**, power button **805** for turning the VPU **20** on and off, setting button **810**, zoom buttons **820** for controlling the camera **12**, connector port **815** for connecting to the Glasses **5**, a connector port **816** for connecting to the laptop **10** through the connection adapter **40**, indicator lights **825** to give visual indication of operating status of the system, the rechargeable battery **25** for powering the VPU **20**, battery latch **830** for locking the battery **25** in the case **800**, digital circuit boards (not shown), and a speaker (not shown) to provide audible alerts to indicate various operational conditions of the system. Because the VPU **20** is used and operated by a person with minimal or no vision, the buttons on the VPU **20** may be differently shaped and/or have special markings as shown in FIG. **12** to help the user identify the functionality of the button without having to look at it. As shown in FIG. **12**, the power button **805** may be a circular shape while the settings button **820** may be square shape and the zoom buttons **820** may have special raised markings **830** to also identify each button's functionality. One skilled in the art would appreciate that other shapes and markings can be used to identify the buttons without departing from the spirit and scope of the invention. For example, the markings can be recessed instead of raised.

In one embodiment, the indicator lights **825** may indicate that the VPU **20** is going through system start-up diagnostic testing when the one or more indicator lights **825** are blinking fast (more then once per second) and are green in color. The indicator lights **825** may indicate that the VPU **20** is operating normally when the one or more indicator lights **825** are blinking once per second and are green in color. The indicator lights **825** may indicate that the retinal stimulation system **1** has a problem that was detected by the VPU **20** at start-up diagnostic when the one or more indicator lights **825** are blinking for example once per five second and are green in color. The indicator lights **825** may indicate that the video signal from camera **12** is not being received by the VPU **20** when the one or more indicator lights **825** are always on and are amber color. The indicator lights **825** may indicate that there is a loss of communication between the retinal stimulation system **1** and the external coil **14** due to the movement or removal of Glasses **5** while the system is operational or if the VPU **20** detects a problem with the retinal stimulation system **1** and shuts off power to the retinal stimulation system **1** when the one or more indicator lights **825** are always on and are orange color. One skilled in the art would appreciate that other colors and blinking patterns can be used to give visual indication of operating status of the system without departing from the spirit and scope of the invention.

In one embodiment, a single short beep from the speaker (not shown) may be used to indicate that one of the buttons **825**, **805** or **810** have been pressed. A single beep followed by two more beeps from the speaker (not shown) may be used to indicate that VPU **20** is turned off. Two beeps from the speaker (not shown) may be used to indicate that VPU **20** is starting up. Three beeps from the speaker (not shown) may be used to indicate that an error has occurred and the VPU **20** is about to shut down automatically. As would be clear to one skilled in the art, different periodic beeping may also be used to indicate a low battery voltage warning, that there is a problem with the video signal, and/or there is a loss of communication between the retinal stimulation system **1** and the external coil **14**. One skilled in the art would appreciate that other sounds can be used to give audio indication of operating status of the system without departing from the spirit and scope of the invention. For example, the beeps may be replaced by an actual prerecorded voice indicating operating status of the system.

In one exemplary embodiment, the VPU **20** is in constant communication with the retinal stimulation system **1** through forward and backward telemetry. In this document, the forward telemetry refers to transmission from VPU **20** to the retinal stimulation system **1** and the backward telemetry refers to transmissions from the Retinal stimulation system **1** to the VPU **20**. During the initial setup, the VPU **20** may transmit null frames (containing no stimulation information) until the VPU **20** synchronizes with the Retinal stimulation system **1** via the back telemetry. In one embodiment, an audio alarm may be used to indicate whenever the synchronization has been lost.

In order to supply power and data to the Retinal stimulation system **1**, the VPU **20** may drive the external coil **14**, for example, with a 3 MHz signal. To protect the subject, the retinal stimulation system **1** may comprise a failure detection circuit to detect direct current leakage and to notify the VPU **20** through back telemetry so that the visual prosthesis apparatus can be shut down.

The forward telemetry data (transmitted for example at 122.76 kHz) may be modulated onto the exemplary 3 MHz carrier using Amplitude Shift Keying (ASK), while the back telemetry data (transmitted for example at 3.8 kHz) may be modulated using Frequency Shift Keying (FSK) with, for example, 442 kHz and 457 kHz. The theoretical bit error rates can be calculated for both the ASK and FSK scheme assuming a ratio of signal to noise (SNR). The system disclosed in the present disclosure can be reasonably expected to see bit error rates of 10-5 on forward telemetry and 10-3 on back telemetry. These errors may be caught more than 99.998% of the time by both an ASIC hardware telemetry error detection algorithm and the VPU **20**'s firmware. For the forward telemetry, this is due to the fact that a 16-bit cyclic redundancy check (CRC) is calculated for every 1024 bits sent to the ASIC within electronics package **4** of the Retinal Stimulation System **1**. The ASIC of the Retinal Stimulation System **1** verifies this CRC and handles corrupt data by entering a non-stimulating 'safe' state and reporting that a telemetry error was detected to the VPU **20** via back telemetry. During the 'safe' mode, the VPU **20** may attempt to return the implant to an operating state. This recovery may be on the order of milliseconds. The back telemetry words are checked for a 16-bit header and a single parity bit. For further protection against

corrupt data being misread, the back telemetry is only checked for header and parity if it is recognized as properly encoded Bi-phase Mark Encoded (BPM) data. If the VPU **20** detects invalid back telemetry data, the VPU **20** immediately changes mode to a 'safe' mode where the Retinal Stimulation System **1** is reset and the VPU **20** only sends non-stimulating data frames. Back telemetry errors cannot cause the VPU **20** to do anything that would be unsafe.

The response to errors detected in data transmitted by VPU **20** may begin at the ASIC of the Retinal Stimulation System **1**. The Retinal Stimulation System **1** may be constantly checking the headers and CRCs of incoming data frames. If either the header or CRC check fails, the ASIC of the Retinal Stimulation System **1** may enter a mode called LOSS OF SYNC **950**, shown in FIG. **13***a*. In LOSS OF SYNC mode **950**, the Retinal Stimulation System **1** will no longer produce a stimulation output, even if commanded to do so by the VPU **20**. This cessation of stimulation occurs after the end of the stimulation frame in which the LOSS OF SYNC mode **950** is entered, thus avoiding the possibility of unbalanced pulses not completing stimulation. If the Retinal Stimulation System **1** remains in a LOSS OF SYNC mode **950** for 1 second or more (for example, caused by successive errors in data transmitted by VPU **20**), the ASIC of the Retinal Stimulation System **1** disconnects the power lines to the stimulation pulse drivers. This eliminates the possibility of any leakage from the power supply in a prolonged LOSS OF SYNC mode **950**. From the LOSS OF SYNC mode **950**, the Retinal Stimulation System **1** will not re-enter a stimulating mode until it has been properly initialized with valid data transmitted by the VPU **20**.

In addition, the VPU **20** may also take action when notified of the LOSS OF SYNC mode **950**. As soon as the Retinal Stimulation System **1** enters the LOSS OF SYNC mode **950**, the Retinal Stimulation System **1** reports this fact to the VPU **20** through back telemetry. When the VPU **20** detects that the Retinal Stimulation System **1** is in LOSS OF SYNC mode **950**, the VPU **20** may start to send 'safe' data frames to the Retinal Stimulation System **1**. 'Safe' data is data in which no stimulation output is programmed and the power to the stimulation drivers is also programmed to be off. The VPU **20** will not send data frames to the Retinal Stimulation System **1** with stimulation commands until the VPU **20** first receives back telemetry from the Retinal Stimulation System **1** indicating that the Retinal Stimulation System **1** has exited the LOSS OF SYNC mode **950**. After several unsuccessful retries by the VPU **20** to take the implant out of LOSS OF SYNC mode **950**, the VPU **20** will enter a Low Power Mode (described below) in which the implant is only powered for a very short time. In this time, the VPU **20** checks the status of the implant. If the implant continues to report a LOSS OF SYNC mode **950**, the VPU **20** turns power off to the Retinal Stimulation System **1** and tries again later. Since there is no possibility of the implant electronics causing damage when it is not powered, this mode is considered very safe.

Due to an unwanted electromagnetic interference (EMI) or electrostatic discharge (ESD) event the VPU **20** data, specifically the VPU firmware code, in RAM can potentially get corrupted and may cause the VPU **20** firmware to freeze. As a result, the VPU **20** firmware will stop resetting the hardware watchdog circuit, which may cause the system to reset. This will cause the watchdog timer to expire causing a system reset in, for example, less than 2.25 seconds. Upon recovering from the reset, the VPU **20** firmware logs the event and shuts itself down. VPU **20** will not allow system usage after this occurs once. This prevents the VPU **20** code from freezing for extended periods of time and hence reduces the probability of the VPU sending invalid data frames to the implant.

Supplying power to the Retinal stimulation system **1** can be a significant portion of the VPU **20**'s total power consumption. When the Retinal stimulation system **1** is not within receiving range to receive either power or data from the VPU **20**, the power used by the VPU **20** is wasted.

Power delivered to the Retinal stimulation system **1** may be dependent on the orientation of the coils **14** and **116**. The power delivered to the Retinal stimulation system **1** may be controlled, for example, via the VPU **20** every 16.6 ms. The Retinal stimulation system **1** may report how much power it receives and the VPU **20** may adjust the power supply voltage of the RF driver to maintain a required power level on the Retinal stimulation system **1**. Two types of power loss may occur: 1) long term (>~1 second) and 2) short term (<~1 second). The long term power loss may be caused, for example, by a subject removing the Glasses **5**.

In one exemplary embodiment, the Low Power Mode may be implemented to save power for VPU **20**. The Low Power Mode may be entered, for example, anytime the VPU **20** does not receive back telemetry from the Retinal stimulation system **1**. Upon entry to the Low Power Mode, the VPU **20** turns off power to the Retinal stimulation system **1**. After that, and periodically, the VPU **20** turns power back on to the Retinal stimulation system **1** for an amount of time just long enough for the presence of the Retinal stimulation system **1** to be recognized via its back telemetry. If the Retinal stimulation system **1** is not immediately recognized, the controller again shuts off power to the Retinal stimulation system **1**. In this way, the controller 'polls' for the passive Retinal stimulation system **1** and a significant reduction in power used is seen when the Retinal stimulation system **1** is too far away from its controller device. FIG. **13***b* depicts an exemplary block diagram **900** of the steps taken when the VPU **20** does not receive back telemetry from the Retinal stimulation system **1**. If the VPU **20** receives back telemetry from the Retinal stimulation system **1** (output "YES" of step **901**), the Retinal stimulation system **1** may be provided with power and data (step **906**). If the VPU **20** does not receive back telemetry from the Retinal stimulation system **1** (output "NO" of step **901**), the power to the Retinal stimulation system **1** may be turned off. After some amount of time, power to the Retinal stimulation system **1** may be turned on again for enough time to determine if the Retinal stimulation system **1** is again transmitting back telemetry (step **903**). If the Retinal stimulation system **1** is again transmitting back telemetry (step **904**), the Retinal stimulation system **1** is provided with power and data (step **906**). If the Retinal stimulation system **1** is not transmitting back telemetry (step **904**), the power to the Retinal stimulation system **1** may again be turned off for a predetermined amount of time (step **905**) and the process may be repeated until the Retinal stimulation system **1** is again transmitting back telemetry.

In another exemplary embodiment, the Low Power Mode may be entered whenever the subject is not wearing the Glasses **5**. In one example, the Glasses **5** may contain a capacitive touch sensor (not shown) to provide the VPU **20** digital information regarding whether or not the Glasses **5** are being worn by the subject. In this example, the Low Power Mode may be entered whenever the capacitive touch sensor detects that the subject is not wearing the Glasses **5**. That is, if the subject removes the Glasses **5**, the VPU **20** will shut off power to the external coil **14**. As soon as the Glasses **5** are put back on, the VPU **20** will resume powering the external coil **14**. FIG. **13***c* depicts an exemplary block diagram **910** of the steps taken when the capacitive touch sensor detects that the

subject is not wearing the Glasses **5**. If the subject is wearing Glasses **5** (step **911**), the Retinal stimulation system **1** is provided with power and data (step **913**). If the subject is not wearing Glasses **5** (step **911**), the power to the Retinal stimulation system **1** is turned off (step **912**) and the process is repeated until the subject is wearing Glasses **5**.

One exemplary embodiment of the VPU **20** is shown in FIG. **14**. The VPU **20** may comprise: a Power Supply, a Distribution and Monitoring Circuit (PSDM) **1005**, a Reset Circuit **1010**, a System Main Clock (SMC) source (not shown), a Video Preprocessor Clock (VPC) source (not shown), a Digital Signal Processor (DSP) **1020**, Video Preprocessor Data Interface **1025**, a Video Preprocessor **1075**, an I^2C Protocol Controller **1030**, a Complex Programmable Logic device (CPLD) (not shown), a Forward Telemetry Controller (FTC) **1035**, a Back Telemetry Controller (BTC) **1040**, Input/Output Ports **1045**, Memory Devices like a Parallel Flash Memory (PFM) **1050** and a Serial Flash Memory (SFM) **1055**, a Real Time Clock **1060**, an RF Voltage and Current Monitoring Circuit (VIMC) (not shown), a speaker and/or a buzzer, an RF receiver **1065**, and an RF transmitter **1070**.

The Power Supply, Distribution and Monitoring Circuit (PSDM) **1005** may regulate a variable battery voltage to several stable voltages that apply to components of the VPU **20**. The Power Supply, Distribution and Monitoring Circuit (PSDM) **1005** may also provide low battery monitoring and depleted battery system cutoff. The Reset Circuit **1010** may have reset inputs **1011** that are able to invoke system level rest. For example, the reset inputs **1011** may be from a manual push-button reset, a watchdog timer expiration, and/or firmware based shutdown. The System Main Clock (SMC) source is a clock source for DSP **1020** and CPLD. The Video Preprocessor Clock (VPC) source is a clock source for the Video Processor. The DSP **1020** may act as the central processing unit of the VPU **20**. The DSP **1020** may communicate with the rest of the components of the VPU **20** through parallel and serial interfaces. The Video Processor **1075** may convert the NTSC signal from the camera **12** into a down-scaled resolution digital image format. The Video Processor **1075** may comprise a video decoder (not shown) for converting the NTSC signal into high-resolution digitized image and a video scaler (not shown) for scaling down the high-resolution digitized image from the video decoder to an intermediate digitized image resolution. The video decoder may be composed of an Analog Input Processing, Chrominance and Luminance Processing and Brightness Contrast and Saturation (BSC) Control circuits. The video scaler may be composed of Acquisition control, Pre-scaler, BSC-control, Line Buffer and Output Interface. The I^2C Protocol Controller **1030** may serve as a link between the DSP **1020** and the I^2C bus. The I^2C Protocol Controller **1030** may be able to convert the parallel bus interface of the DSP **1020** to the I^2C protocol bus or vice versa. The I^2C Protocol Controller **1030** may also be connected to the Video Processor **1075** and the Real Time Clock **1060**. The VPDI **1025** may contain a tri-state machine to shift video data from Video Preprocessor **1075** to the DSP **1020**. The Forward Telemetry Controller (FTC) **1035** packs 1024 bits of forward telemetry data into a forward telemetry frame. The FTC **1035** retrieves the forward telemetry data from the DSP **1020** and converts the data from logic level to biphase marked data. The Back Telemetry Controller (BTC) **1040** retrieves the biphase marked data from the RF receiver **1065**, decodes it, and generates the BFSR, BCLKR and BDR for the DSP **1020**. The Input/Output Ports **1045** provide expanded IO functions to access the CPLD on-chip and off-chip devices. The Parallel Flash Memory (PFM) **1050** may be used to store executable code and the Serial Flash Memory (SFM) **1055** may provide Serial Port Interface (SPI) for data storage. The VIMC may be used to sample and monitor RF transmitter **1070** current and voltage in order to monitor the integrity status of the retinal stimulation system **1**.

Accordingly, what has been shown is an improved visual prosthesis and an improved method for limiting power consumption in a visual prosthesis. While the invention has been described by means of specific embodiments and applications thereof, it is understood that numerous modifications and variations could be made thereto by those skilled in the art without departing from the spirit and scope of the invention. It is therefore to be understood that within the scope of the claims, the invention may be practiced otherwise than as specifically described herein.

What is claimed is:

1. A visual prosthesis apparatus comprising:

a camera for capturing a video image;

a video processing unit associated with the camera, the video processing unit configured to convert the video image to stimulation patterns, the video processing unit is configured to stop transmitting the stimulation patterns to the retinal stimulation system when the retinal stimulation system does not transmit valid back telemetry data; and

a retinal stimulation system configured to stop stimulating neural tissue in a subject's eye, and return an error signal to the video processing unit, based on the stimulation patterns when an error is detected in a forward telemetry received from the video processing unit.

2. The visual prosthesis apparatus of claim **1**, wherein the retinal stimulation system is configured to notify the video processing unit of the error.

3. The visual prosthesis apparatus of claim **2**, wherein the video processing unit is configured to stop transmitting the forward telemetry to the retinal stimulation system for stimulating neural tissue in the subject's eye until the error is resolved.

4. The visual prosthesis apparatus of claim **2**, wherein the video processing unit is configured to limit power transmitted to the retinal stimulation system.

5. The visual prosthesis apparatus of claim **1**, wherein the forward telemetry comprises the stimulation patterns.

6. A method for limiting power consumption in a visual prosthesis apparatus comprising a retinal stimulation system and a video processing unit, the method comprising:

determining if the retinal stimulation system is transmitting valid back telemetry data to the video processing unit by sending data without stimulation signals; and

transmitting power and data to the retinal stimulation system only as long as the retinal stimulation system transmits the valid back telemetry data.

7. A method of claim **6**, further comprising:

periodically transmitting power to the retinal stimulation system until the retinal stimulation system transmits the back telemetry.

8. A visual prosthesis apparatus comprising:

a camera for capturing a video image; and

a video processing unit associated with the camera and associated with a retinal stimulation system, wherein the video processing unit is configured to convert the video image to stimulation patterns and transmit the stimulation patterns to the retinal stimulation system for stimulation of neural tissue in a subject's eye, and the video processing unit is configured to stop transmitting the stimulation patterns to the retinal stimulation system when the retinal stimulation system detects an error in a

forward telemetry received from the video processing unit, and does not transmit valid, non-error, back telemetry data.

9. The visual prosthesis apparatus of claim **8**, wherein the retinal stimulation system is configured to notify the video processing unit of the error.

10. The visual prosthesis apparatus of claim **9**, wherein the retinal stimulation system is configured to stop stimulating neural tissue in the subject's eye until the error is resolved.

11. The visual prosthesis apparatus of claim **9**, wherein the video processing unit is configured to limit power transmitted to the retinal stimulation system.

12. A method for limiting power consumption in a visual prosthesis apparatus comprising a retinal stimulation system and a video processing unit, the method comprising:

a) transmitting power and data via forward telemetry to the retinal stimulation system;

b) determining if the retinal stimulation system is transmitting an error signal in the back telemetry to the video processing unit;

c) stop transmitting the power and the data via forward telemetry to the retinal stimulation system when the retinal stimulation system does not transmit valid, non-error, back telemetry data;

d) transmitting the power to the retinal stimulation system for a predetermined amount of time;

e) determining if the retinal stimulation system is transmitting an error signal in the back telemetry during the predetermined amount of time;

f) stop transmitting power to the retinal stimulation system when the retinal stimulation system transmits an error signal in the back telemetry during the predetermined amount of time; and

g) repeating features d) through f) until the retinal stimulation system transmits the back telemetry without an error signal.

* * * * *