The Patents and Trademarks of Biomimcry: Inspired by Nature One Invention at a Time

A collaboration between the United States Patent and Trademark Office and Inside the Outdoors, a program of the Orange County Department of Education

What do jumbo squids, butterflies, sharks and pipe vines have do with inventing?

Find your way through the maze below, recording the letters as you go along, to find out.

Inventors have looked to the natural world for inspiration for many years now. Nature has had much more time to figure out successful solutions for problems that we just have started investigating! Nature has engineered answers for difficult topics such as energy consumption, climate control, transportation, and food production. The inventor of today does not need to reinvent the wheel, but rather look at the ways in which the natural world around us has already solved the issues that we are facing.

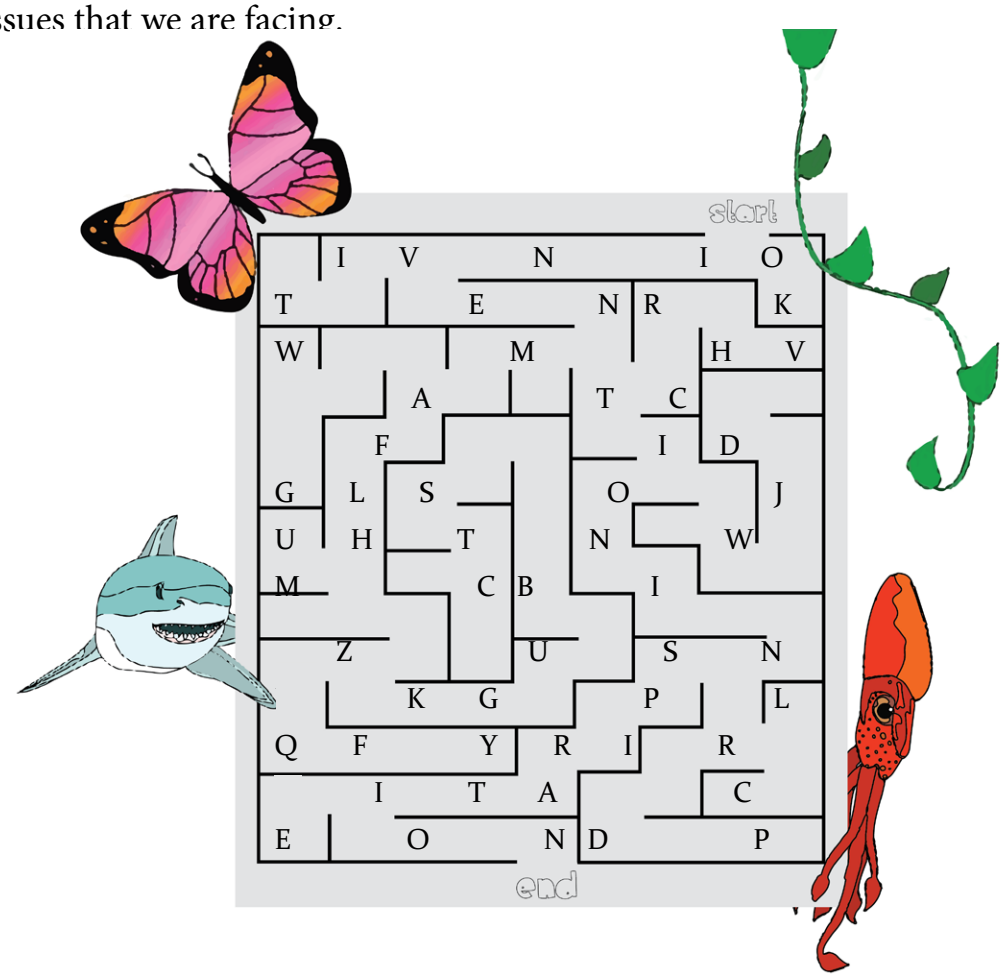

_ _ _ _ _ _ _ _ _

_ _ _ _ _ _ _ _ _ _ _

Answer: Invention Inspiration

Invention is aided by the United States Patent and Trademark Office through patents and trademarks. Patents and trademarks, along with copyrights and trade secrets, are called intellectual property. Just like you can own a piece of land or a car as property, you can own an idea as intellectual property.

Read the next few pages to learn more about patents, trademarks and the role that intellectual property plays in our world.

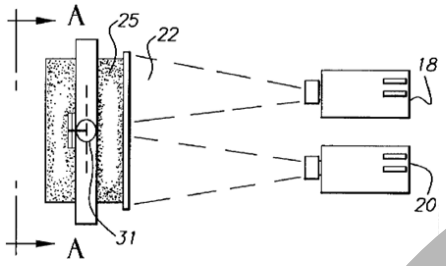

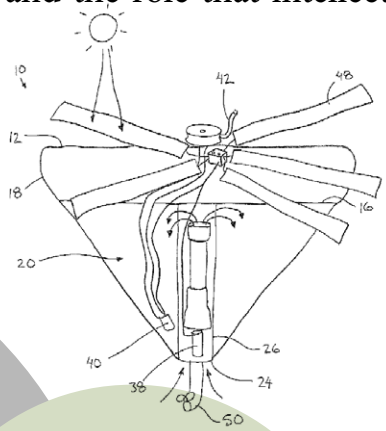

You create an invention inspired by nature to solve a societal need.

You apply for and receive a patent, temporarily excluding others from making and using it, in exchange for public disclosure.

Someone is inspired by your invention, leading them to the creation of other inventions or improvements.

Competition is encouraged and you and other inventors are continuously inspired to think of new inventions.

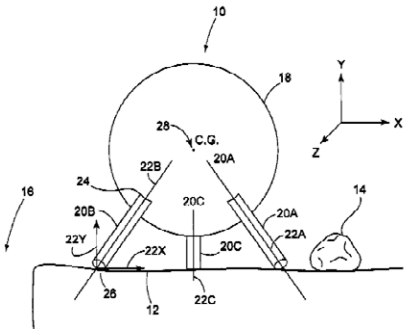

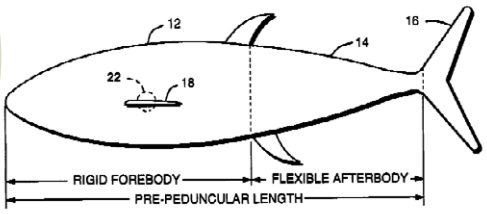

Clockwise: Polarization Differencing to Improve Vision U.S. Patent No. 5975702 inspired by frog eyes; Portable Water Filtration Device U.S. Patent No. 7648629 inspired by eukaryotic cells; Free Swinging Aquatic Vehicle U.S. Patent No. 6138604 inspired by yellow fin tuna; Robotic All Terrain Surveyor U.S. Patent No. 7165637 inspired by sea urchin.

Do you know what a Patent is?

A patent is a temporary property right granted by the government to an inventor for a new, useful and non-obvious invention. Patents allow inventors to exclude others from making, using, or selling their inventions without permission for a limited time in exchange for sharing the details and instructions of their inventions with the public.

Connect the dots to see a famous example of biomimcry invented by the Wright Brothers inspired by pigeons in flight.

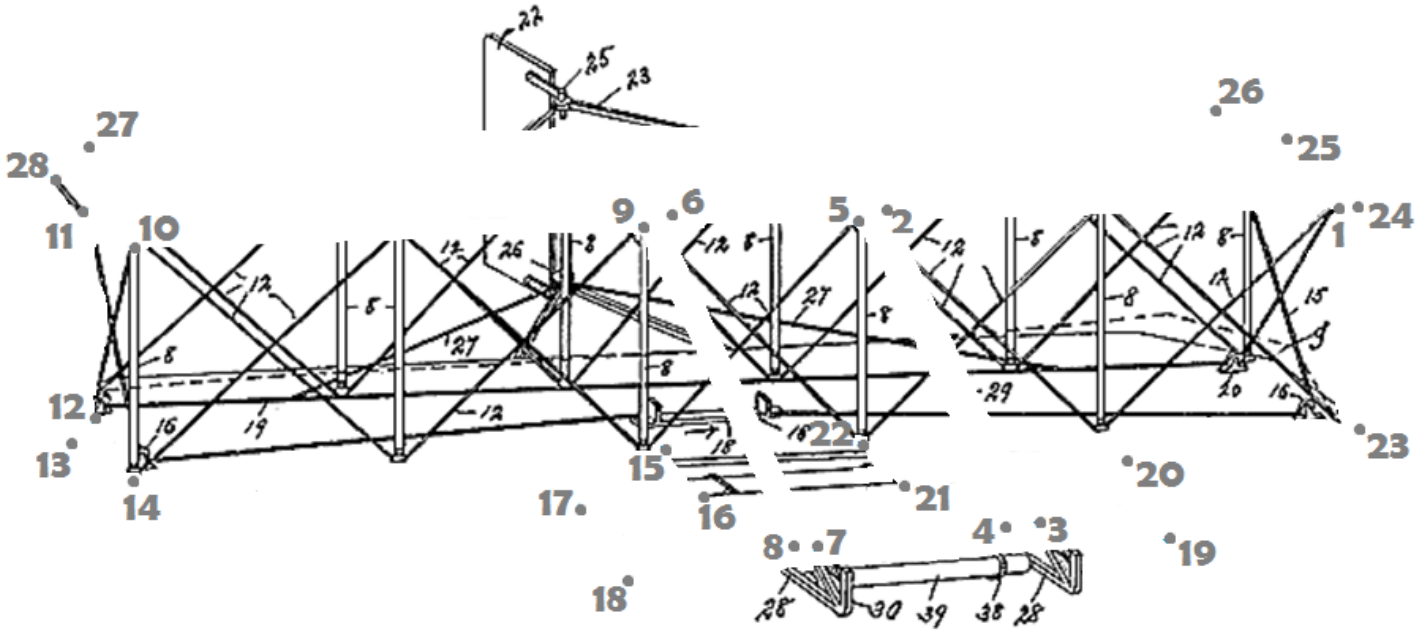

UNITED STATES PATENT OFFICE.

ORVILLE WRIGHT AND WILBUR WRIGHT, OF DAYTON, OHIO.

FLYING-MACHINE.

No. 821,393. Specification of Letters Patent. Patented May 22, 1906.

Application filed March 23, 1903. Serial No. 148,220.

Three Types of Patents

Utility Patent– a new and useful process, machine, article of manufacture, or composition of matter
- **How an invention works**

Design Patent– a new, original and ornamental design for an article of manufacture
- **How an invention looks**

Plant Patent– a new and distinct asexually reproduced variety of plant
- **New living plant organism**

U.S. Patent applications are examined by engineers and scientists, but inventions are made by all kinds of people!

Our bodies are amazing! They are preprogrammed to heal themselves. If you get a cut or scrape, it is only a matter of time before your blood rushes into action, delivering platelets to seal up the wound.

Brinker Technology took this self-healing ability and applied it to pipes. Leaks that form in duct work can be expensive, time consuming or impossible to access for repair. Brinker Technology U.S. Patent #s 7,856,864, 7,810,523 and 8,061,389 are drawn to a method of sending a sensor through the pipes, like platelets do in your blood stream, seeking leakages and sealing them.

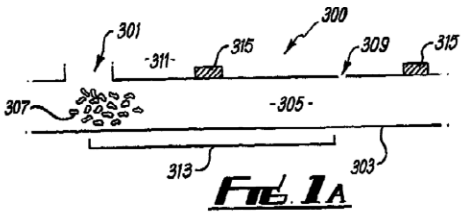

FIG. 1A

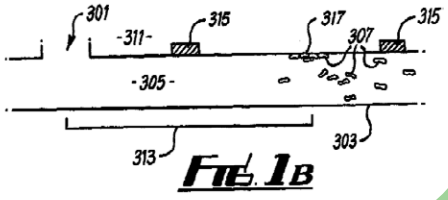

FIG. 1B

All of the inventions below were inspired by trees!

U.S. Patents No. 7955430, 7686879, and 6919398 are based on technology derived from a leaf. Lotusan® paints create a super hydrophobic surface like the surface of leaves that prevent dirt and algae build up.

U.S. Patent No. 5084365 discloses a photoelectrochromic device also called Gratzel cells named after the inventor. Better known as dye sensitized solar cell, they mimic photosynthesis.

U.S. Patent No. 7799127 discloses a cement compound, inspired by the bark's ability to "self-repair." It is composed of tiny fibers that allow crack control, minimizing damage while remaining strong.

U.S. Patent No. 6766817 discloses a fluid conduction system modeled on the shape and porosity of plant cells that form roots that allows a multi-directional flow against gravity.

Photo courtesy of Casey Bryant 2012

"Before... any man might instantly use what another had invented; so that the inventor had no special advantage from his own invention. The patent system changed this; secured to the inventor, for a limited time, the exclusive use of his invention; and thereby added the fuel of interest to the fire of genius, in the discovery and production of new and useful things."

Abraham Lincoln 1859

What is a plant patent?

Nature does a great job of cross breeding new species. New creatures are born all the time as mutations and selective traits are passed onto the young through their parents' genes. Luther Burbank spent most of his life interbreeding closely related plants to achieve specific results. This was a slow process that required growing hundreds of plants and then selecting the ones with desirable traits to continue breeding. At any given time, Burbank monitored over 3,000 experiments involving millions of plants.

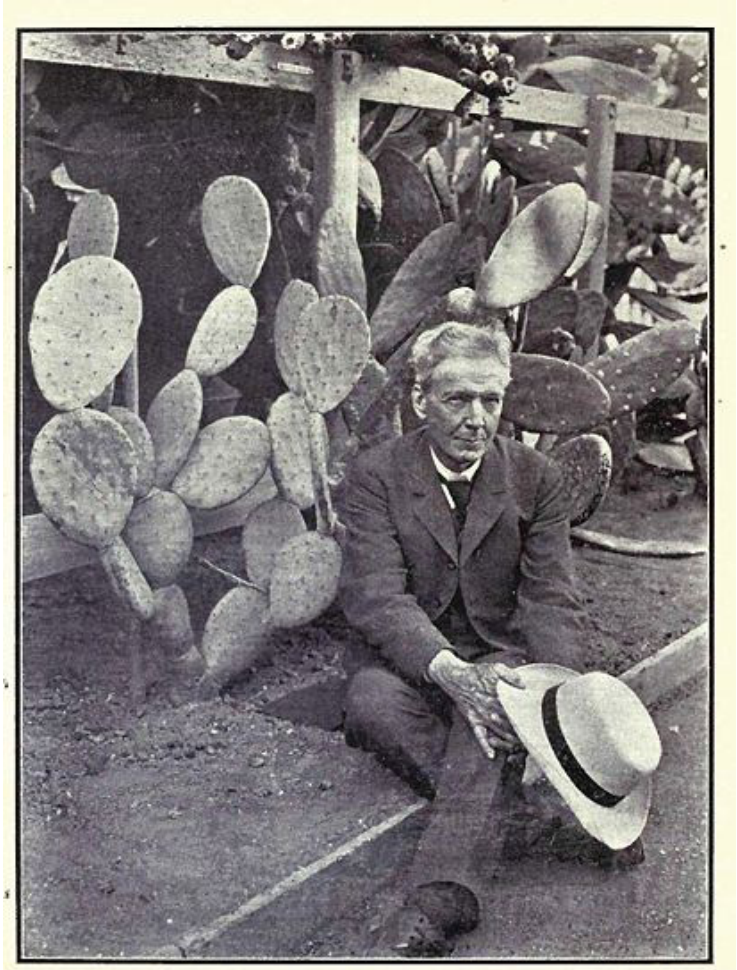

LUTHER BURBANK, THE CALIFORNIA PLANT WIZARD, AND HIS THORNLESS CACTUS. FROM HIS LATEST PHOTOGRAPH.

You might have heard of him, but more likely you've eaten his invention! The Burbank potato has become wildly popular across the world and its progeny, the Russet-Burbank Potato, is used to make French fries in many fast food restaurants. He also created varieties of plums, peaches, daisies, Swiss chard, berries and edible cactus. His work caused Congress to change the Patent Laws in 1930 which allowed horticulturists the right to patent their new and distinct varieties of asexually reproduced plants.

Do you know what a Trademark is?

A trademark can be almost anything that identifies and distinguishes the source of a product or service from those of others. Symbols, words, designs, scents and even colors can function as trademarks.

Federal trademark registration has several benefits:

1. **Gives notice nation-wide of your claim of ownership.**
2. **Allows you to sue in federal court if someone uses your mark.**
3. **Can serve as a basis for filing a registration in a foreign country.**

What is a Color Mark?

When color acquires a secondary meaning as uniquely identifying and distinguishing one company's products from another, it can be registered as a trademark for that specific product type.

In nature, snakes are identifiable by their colors. The very dangerous coral snake has red/yellow/black/yellow/red pattern of stripes, often confused with the non-venomous Milk snake which has red/black/yellow/black/red stripes. Color trademarks, just like natural markings on snakes, help us determine which products we want to take home with us and which ones to leave on the shelves.

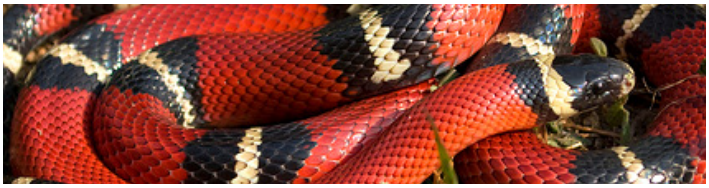

Speedo International

U.S. Registration 1,765,586 for clothing and many other goods. Speedo® has developed swim suits designed to mimic the skin of sharks, repelling water and minimizing surface friction. These suits have been trademarked under the name Faskskin® swimwear and the newer version LZR Racer® Registrations 2,701,688 and 3,618,135

What is a Sound Mark?

Sounds can be registered as trademarks if they are used in a manner that attaches them to the mind of the listener such that upon hearing the sound the listener associates it with the source of a particular product or service.

Ever notice the sounds of thunder and rain, right before the vegetables and fruit are misted in the grocery store? That signature sound is trademarked by KES Irrigation Systems, Inc for misting units for timed water delivery to fruit and vegetables on display. If you hear thunder and rain from a vegetable mister, you know it was made by KES Irrigation. Registration 2,203,470

What is the difference between a trademark and a generic name?

Trademarks do not have an expiration date. Registrations last as long as the owner is still making use of the mark and the registration is maintained at the USPTO.

It is very important to distinguish between generic names for items and their trademarks. If a trademark becomes the common word for an item, the company has the potential to lose its trademark protection.

The inventor of Velcro® hook and loop fasteners, George de Mestral, was inspired by burrs that stuck to his clothing when walking through the woods. His invention resulted in a fabric with tiny hooks on one side that corresponded to tiny loops on another piece of fabric. He registered a trademark name for his invention: Velcro® for his synthetic material having complementing parts which adhere to each other when pressed together in 1958. Registration 661700

Biomimicry Personality Quiz

To get started on your own invention, let's take a quiz to see what part of nature you could begin with. Circle the most accurate answer.

My favorite parts of my backyard are:

a) trees

b) friends

c) birds

d) flowers

When I play outside I prefer to:

a) collect leaves

b) play hide and seek

c) run around

d) sit and think

I cannot leave the house without my:

a) bookbag

b) rain jacket

c) bicycle

d) camera

A typical outfit for me includes:

a) anything with pockets

b) a warm sweater

c) tennis shoes

d) glasses

If you can't find me,
I'm probably hanging out at:

a) the mall

b) my house

c) the soccer field

d) school

Now, tally up your answers.

Do you recognize that Swoosh®?

Nike® owns the very famous trademark to the right. Nike has used nature as guidance for their famous footwear in the past. The Air Terra Goat-tek trail running shoe was patented in 1999, with an outer sole that mimics the foot of a nimble mountain goat.

Registration No. 977190, and 1200529 for footwear

Patent No. 5926974

If you answered:

Mostly a's: You are a resource collector. Collectors should begin looking for biomimcry opportunities through nature's collection, storage and distribution of resources. Watch the way birds gather then allocate food to their young. Consider how flowers turn their faces to the sun to collect the maximum solar energy. In 1971, Robert Woodbury patented an invention based on an idea he had for collecting water from clouds, in U.S. Patent No. 3616615. Like the back of a beetle, Woodbury's device is a textured mesh that causes fog to condense into a collection basin. Others are improving upon his invention to bring water systems to communities without fresh water supplies. What other ways can our society benefit from nature's strategies to collect water, energy or food?

Mostly b's: You are a committed protector. Protectors can start by discovering how nature protects itself. A tree's bark provides protection for the delicate living cells inside, acts as a barrier against moisture loss and fire damage, as well as insulating it from temperature extremes– all in one! Insects need protection against predators. A moth's eye is formed of many little bumps so as not to reflect light that may attract the attention of something that is hungry. This idea was incorporated by Intel into U.S. Patent No. 6539753 for an antireflective coating used on display screens. What other things need to be protected in nature? Can we borrow nature's protection solutions for ourselves?

Mostly c's: You are an energetic mover. Movers can look to the way living things fly, rotate and crawl. The world is moving around us with bugs that have been developing flight long before we have and plants that learn to climb walls. Humpback whales have bumps all along the edge of their flippers. This causes them to be more aerodynamic when slicing through the water. A company called WhalePower has applied that idea to aircraft wings in U.S. Patent No. 6431498. Watch what shapes allow nature to move more easily and think about ways in which we can apply these tactics to our own mobility.

Mostly d's: You are an information seeker. Seekers should start their biomimcry quest by looking at all the ways that nature gathers information. Consider how the neighborhood cat senses the presence of food compared with the way a tree determines when it is going to rain. A research group at the California Institute of Technology noticed how many mammals process a lot of information through their noses. In their U.S. Patents No. 6631333 and No. 6467333, the team discloses an odor sensor based on the way we smell to detect medical conditions in humans. What other applications can you find for the different sensors found in nature?

Each year, over 150,000 Southern California children, parents, teachers, and community members are immersed in nature's classroom through one of Inside the Outdoors four environmental education programs: Outdoor Science School, Field Trips, Traveling Scientist, and Community Programs. These experiences stimulate curiosity and a sense of play, creating a learning environment that fosters a love of science and builds the foundation for environmental stewardship. Innovative collaborations with partners such as the U.S. Patent and Trademark Office make it possible for Inside the Outdoors to inspire the scientists, engineers, inventors, and dreamers of tomorrow and today!

For more information about Inside the Outdoors, visit:

insidetheoutdoors.org

The United States Patent and Trademark Office in an agency of the U.S. Department of Commerce and is the Federal agency responsible for granting U.S. patents and registering trademarks. In doing this, the USPTO fulfills the mandate of Article I, Section 8, Clause 8, of the Constitution that states the legislative branch shall "promote the progress of science and useful arts by securing for limited times to authors and inventors the exclusive right to their respective writings and discoveries." The USPTO registers trademarks based on the Commerce Clause of the Constitution of Article I, Section 8, Clause 3. Under this system of protection, the American industry has flourished. New products have been invented, new uses for old ones discovered, and employment opportunities created for milions of Americans.

Want to know more about intellectual property? Visit:

uspto.gov