D06F

LAUNDERING, DRYING, IRONING, PRESSING OR FOLDING TEXTILE ARTICLES (apparatus for blocking, pressing, steaming or stretching hats A42C; treating textile materials by liquids, gases or vapours D06B; chemical matters, see D06L, D06M).

Definition statement

This subclass/group covers:

- Domestic or laundry dry-cleaning apparatuses using volatile solvents;
- Domestic, laundry or tailors' ironing or other hot-pressing of clothes, linen or other textile articles;
- Controlling or regulating domestic laundry driers (cf. D06F 58/28).

The Indexing Codes D06F 2058/2803 to D06F 2058/2861 cover the measuring or checking of variables.

The Indexing Codes D06F 2058/2864 to D06F 2058/2896 cover the control or regulation of variables.

Relationship between large subject matter areas

Apparatuses for wringing, washing, dry cleaning, ironing or other hot-pressing of textiles in manufacturing operations are covered by D06B and D06C.

A document should be classified in D06F if:

- It mainly relates to the treatment of home textiles, the treatment of other kinds of textiles should generally be classified somewhere else.
- It generally (but not always) relates to a domestic appliance for treating a textile article (the machine may however be coin-operated).

Exceptions to the rule at point (II) above are:

D06F 31/00, D06F 43/00,, D06F 47/00, D06F 58/12, D06F 67/04, D06F 71/00, D06F 89/00 , D06F 93/00, D06F 95/00 as well as their subgroups.

Applications regarding washing machine components like e.g. pumps, electric motors, electronic devices, displays per se, i.e. applications which claim the technical features of those components without describing any particular interaction between said components and the household appliance do not usually belong to D06F, but to the general classification entry of their function per se.

The above-mentioned devices are mainly seen as "black boxes" connected to the appliance so as to interact with the appliance's operation.

For example, if an application relates to a jog dial, a display or a selector

switch, there must be an interaction between said devices and the appliance itself in order to classify said application in D06F 39/005 (the display or the switch should e.g. be mounted to the front panel and/or should e.g. be used for selecting a washing program).

A set of claims including a claim like " a household appliance comprising the device (e.g. a pump) according to claim 1" does only mean that a device according to claim 1 may be used in a household appliance (e.g. in a washing machine) and that the application may be classified in D06F only if there's a clear interaction between the component and the appliance's operation.

It is not to be automatically assumed that such applications belong to D06F, nor that a household appliance should automatically be a washing machine or a dryer (a household appliance could e.g. be a stove, an oven, a refrigerator etc.).

Informative references

Attention is drawn to the following places, which may be of interest for search:

Cleaning in general	B08B
Dishwashers	A47L 15/00
Electric motors	H02K
Sensors	G01M
Valves	F16K
Drying in general	F26B

Special rules of classification within this subclass

In the following subgroups :

D06F 33/00, D06F 35/00, D06F 37/30, D06F 37/42, D06F 39/005, D06F 39/006, D06F 39/045 and D06F 39/087, it is desirable to add the Indexing Codes listed below to identify aspects related to:

D06F 2202/00 - D06F 2202/12 (Input, e.g. measuring and checking input variables);

D06F 2204/00 - D06F 2204/088 (Output, e.g. automatic control of variables);

D06F 2210/00 (Interfaces, e.g. connections between different parts of the general control system);

D06F 2212/00 - D06F 2212/06 (Programme or timing arrangements);

D06F 2214/00 (Manual setting);

D06F 2216/00 (Display arrangements);

D06F 2220/00 (Time, e.g. real time to perform one or more operations used to influence one or more of the subsequent operations);

D06F 2222/00 (Unbalance arrangements);

D06F 2224/00 (Safety arrangements concerning the opening or closing of the door);

D06F 2226/00 (Liquid or energy recovering arrangements);

D06F 2232/00 - D06F 2232/10 (Processes performed on the laundry, e.g. washing).

Glossary of terms

In this subclass/group, the following terms (or expressions) are used with the meaning indicated:

Drum	Washing receptacle, rotating drum, washing drum or washing tub; the washing receptacle or drum is where the clothes are placed. Drums are generally perforated and are usually the rotating part of the washing machine, however, in D06F 13/00 and subgroups,D06F 15/00 and subgroups,D06F 17/00 and subgroups,D06F 18/00 and subgroups and D06F 19/00 and subgroups,the drum is always stationary.
Tub	Enclosing receptacle, external drum, external tub or fixed tub; the tub is the fixed part of the washing assembly, it contains the washing drum as well as the washing fluid; the tub is generally stationary and water-tight.
Washing assembly	Oscillating assembly, oscillating part or suspended part; it is generally composed by both the drum and the tub.
Lifter	Rib, elements mounted to a rotating drum and acting mainly on the clothes
Agitator:	Rotary and/or oscillating device mounted inside a stationary washing drum and acting mainly on the clothes
Impeller	Rotary devices mounted inside a stationary washing drum and acting mainly on the washing liquid

D06F 1/00

Washing receptacles (of washing machines D06F 37/00, D06F 39/00)

Definition statement

This subclass/group covers:
Illustrative example of subject matter classified in this group.

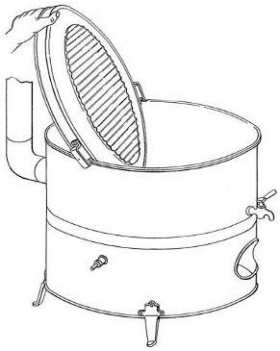

D06F 1/02

Wash-tubs; Supports therefor

Definition statement

This subclass/group covers:
Illustrative example of subject matter classified in this group.

D06F 1/04

The tub walls or bottom having corrugations (rubbing boards D06F 3/02)

Definition statement

This subclass/group covers:
Illustrative example of subject matter classified in this group.

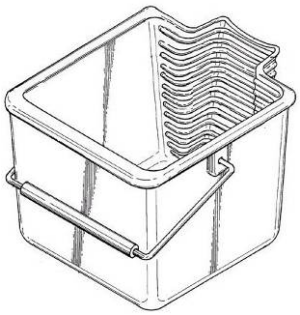

D06F 1/06

Wash-boiler receptacles

Definition statement

This subclass/group covers:
Illustrative example of subject matter classified in this group.

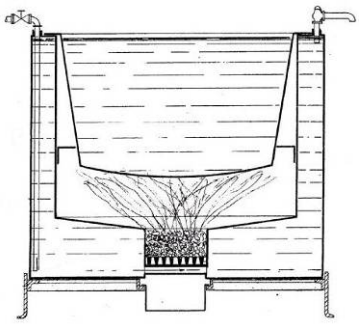

D06F 1/08

With special means for water circulation by heat, e.g. fountain-washers

Definition statement

This subclass/group covers:
Illustrative example of subject matter classified in this group.

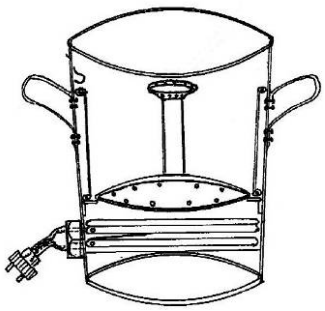

D06F 1/10

Covers; Handles

Definition statement

This subclass/group covers:
Illustrative example of subject matter classified in this group.

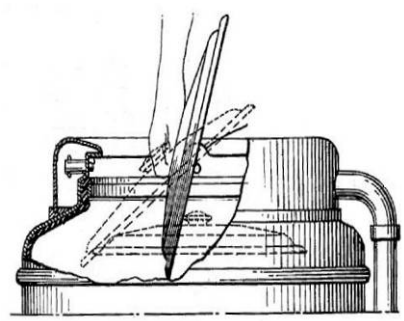

D06F 1/12

Racks or other rigid open containers of skeleton or like apertured construction supporting clothes in washing receptacles

Definition statement

This subclass/group covers:
Illustrative example of subject matter classified in this group.

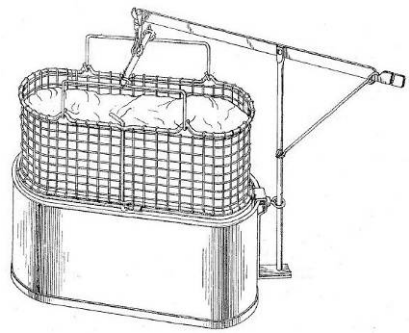

D06F 3/00

Hand rubbing apparatus (corrugated tub-walls D06F 1/04)

Definition statement

This subclass/group covers:
Illustrative example of subject matter classified in this group.

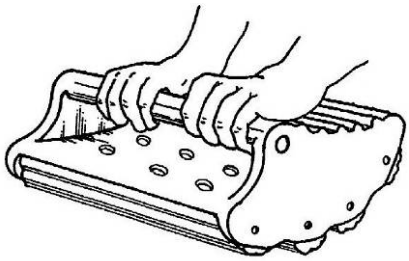

D06F 3/02

Rubbing boards

Definition statement

This subclass/group covers:
Illustrative example of subject matter classified in this group.

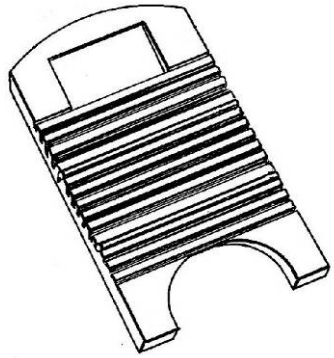

D06F 3/04

Hand rubbers, e.g. gloves with corrugated surfaces

Definition statement

This subclass/group covers:
Illustrative example of subject matter classified in this group.

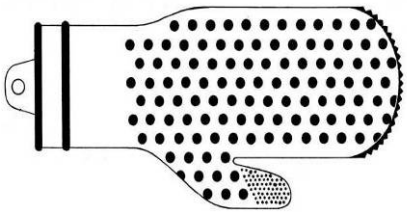

D06F 5/00

Hand implements for washing purposes, e.g. sticks (hand rubbing appliances D06F 3/00; brushes A46B)

Definition statement

This subclass/group covers:

Illustrative example of subject matter classified in this group.

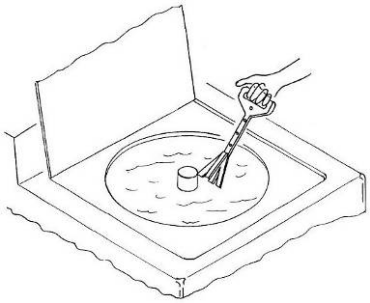

D06F 5/005

[N: Receptacles for washing articles, e.g. hosiery, by shaking or squeezing]

Definition statement

This subclass/group covers:

Illustrative example of subject matter classified in this group.

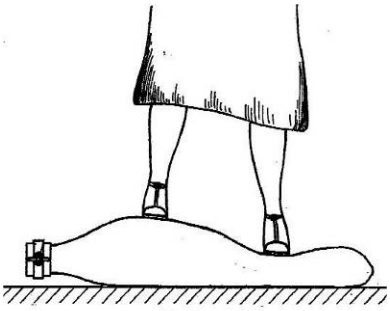

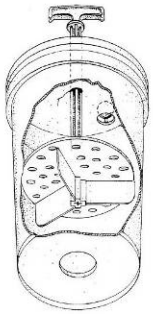

D06F 5/02

Plungers, dollies, pounders, squeezers, or the like

Definition statement

This subclass/group covers:
Illustrative example of subject matter classified in this group.

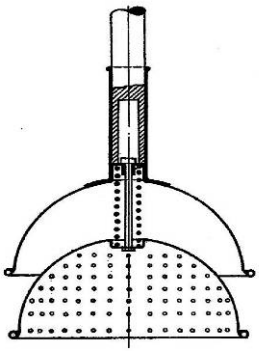

D06F 5/04

adapted for removable mounting on receptacles such as wash-tubs

Definition statement

This subclass/group covers:
Illustrative example of subject matter classified in this group.

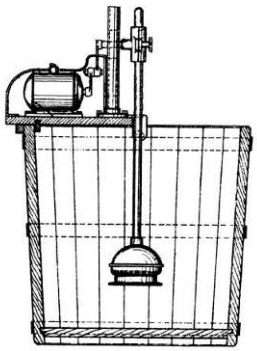

D06F 5/06

Grippers

Definition statement

This subclass/group covers:
Illustrative example of subject matter classified in this group.

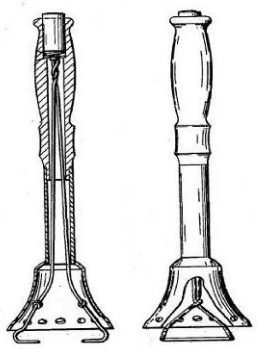

D06F 7/00

Washing devices adapted to be used independently of any particular receptacle, e.g. for removable mounting on wash-tubs, bath-tubs, or the like

Definition statement

This subclass/group covers:

Illustrative example of subject matter classified in this group.

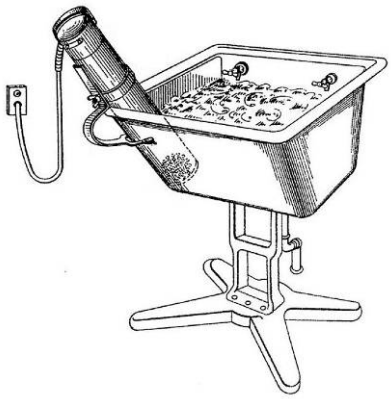

D06F 7/02

of the rotary-impeller type

Definition statement

This subclass/group covers:

Illustrative example of subject matter classified in this group.

D06F 7/04

of the vibrator type

Definition statement

This subclass/group covers:
Illustrative example of subject matter classified in this group.

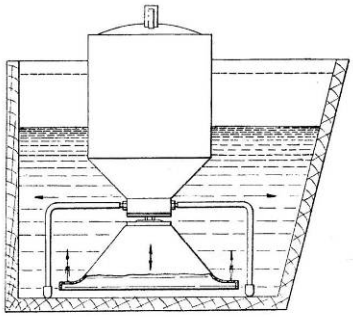

D06F 7/06

agitating the washing liquid by air

Definition statement

This subclass/group covers:
Illustrative example of subject matter classified in this group.

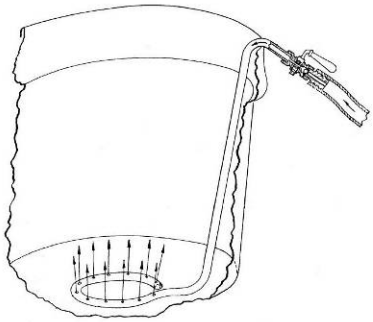

D06F 9/00

Brushing-type washing machines

Definition statement

This subclass/group covers:
Illustrative examples of subject matter classified in this group.

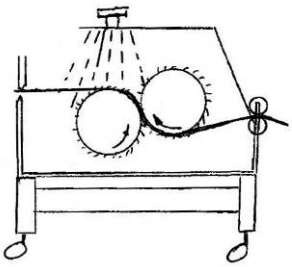

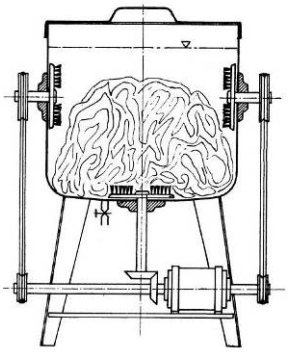

D06F 11/00

Washing machines using rollers, e.g. of the mangle type

Definition statement

This subclass/group covers:
Illustrative example of subject matter classified in this group.

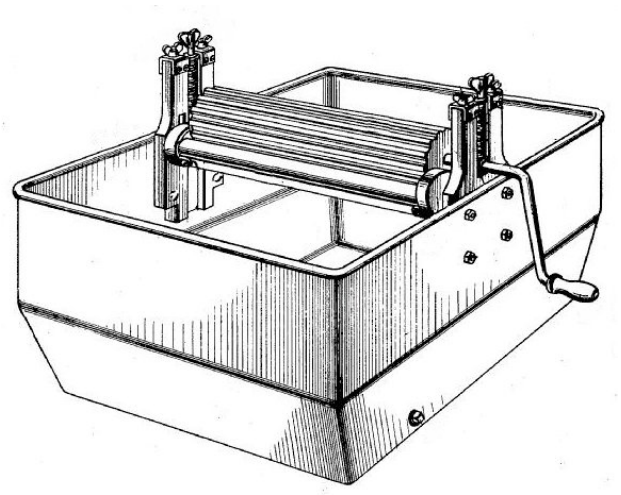

D06F 13/00

Washing machines having receptacles, stationary for washing purposes, with agitators therein contacting the articles being washed (plungers or the like adapted for removable mounting on receptacles D06F 5/04; washing devices adapted to be used independently of any particular receptacle D06F 7/00)

Definition statement

This subclass/group covers:

"American-style" washing machines (characterised by high water and energy consumption and low unbalance).

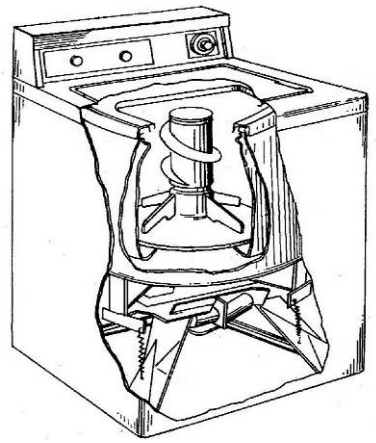

D06F 13/02

Wherein the agitator has an oscillatory rotary motion only

Definition statement

This subclass/group covers:

Illustrative example of subject matter classified in this group.

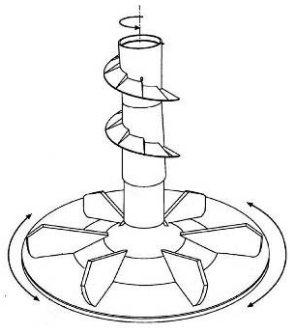

Glossary of terms

In this subclass/group, the following terms (or expressions) are used with the meaning indicated:

Agitator	Rotary and/or oscillating device mounted inside a stationary washing drum and acting mainly on the clothes

D06F 13/04

Wherein the agitator has an axial motion only

Definition statement

This subclass/group covers:

Illustrative example of subject matter classified in this group.

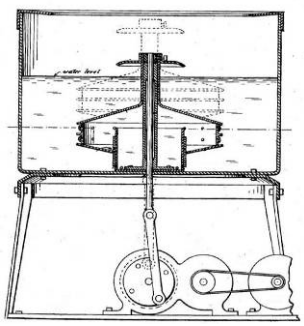

D06F 13/06

Wherein the agitator has both rotary, e.g. oscillating rotary, motion and axial motion

Definition statement

This subclass/group covers:

Illustrative example of subject matter classified in this group.

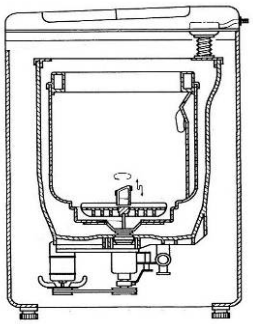

D06F 13/08

Wherein the agitator has a gyratory or orbital motion

Definition statement

This subclass/group covers:
Illustrative example of subject matter classified in this group.

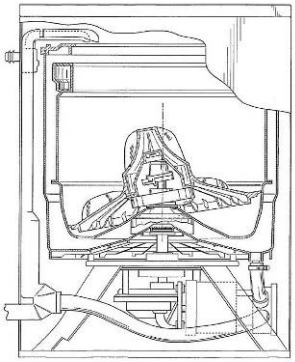

D06F 15/00

Washing machines having beating, rubbing or squeezing means in receptacles stationary for washing purposes (plungers or the like adapted for removable mounting on receptacles D06F 5/04; mangle-type washing machines D06F 11/00)

Definition statement

This subclass/group covers:
Illustrative example of subject matter classified in this group.

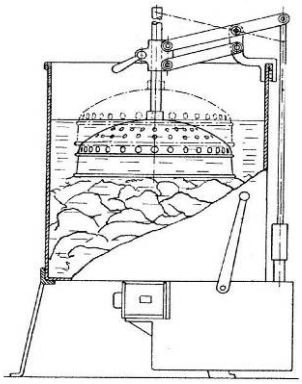

D06F 15/02

Wherein the articles being washed are squeezed by a flexible diaphragm or bag

Definition statement

This subclass/group covers:

Illustrative example of subject matter classified in this group.

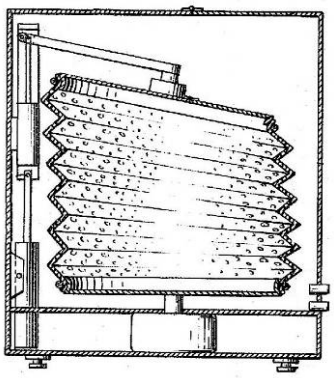

D06F 17/00

Washing machines having receptacles, stationary for washing purposes, wherein the washing action is effected solely by circulation or agitation of the washing liquid (washing devices adapted to be used independently of any particular receptacle D06F 7/00; using vibrations for washing purposes D06F 19/00)

Definition statement

This subclass/group covers:

American and Japanese-style washing machines.

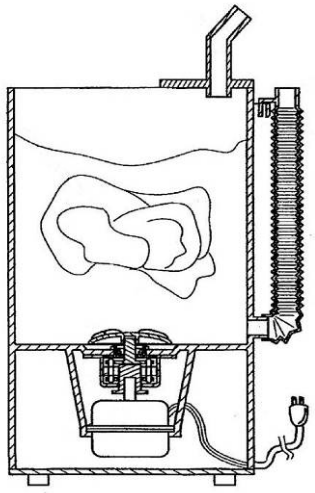

D06F 17/02

by pumps (17/04 takes precedence)

Definition statement

This subclass/group covers:
Illustrative example of subject matter classified in this group.

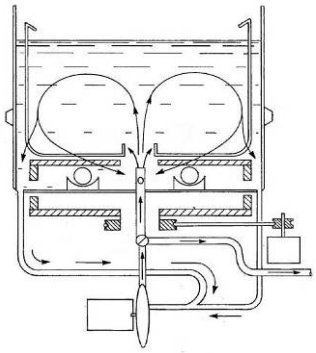

Informative references

Attention is drawn to the following places, which may be of interest for search:

Dishwashers / washing liquid circulation by appl. pressure	A47L 15/08

D06F 17/04

solely by water jets

Definition statement

This subclass/group covers:

Washing machines technically close to dishwashers.

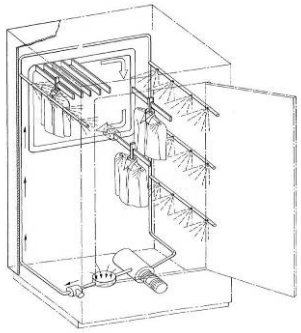

Informative references

Attention is drawn to the following places, which may be of interest for search:

Dishwashers having stat. baskets and rigidly mounted spraying devices	A47L 15/16

D06F 17/06

by rotary impellers

Definition statement

This subclass/group covers:

Illustrative example of subject matter classified in this group.

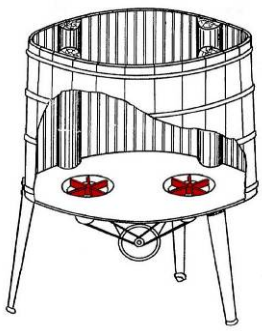

Synonyms and keywords

In this patent documents, the word "Impeller" is often used as a "synonym" for "pulsator".

D06F 17/08

Driving arrangements for the impeller

Definition statement

This subclass/group covers:
Illustrative example of subject matter classified in this group.

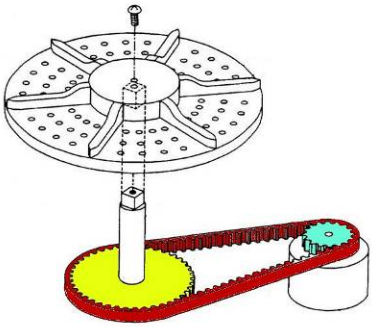

D06F 17/10

Impellers

Definition statement

This subclass/group covers:
Illustrative example of subject matter classified in this group.

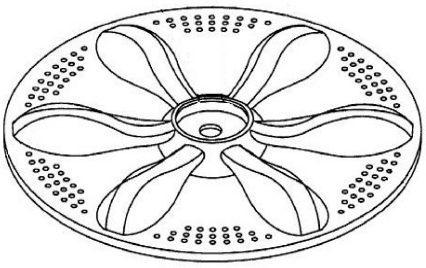

D06F 17/12

solely by gases, e.g. air or steam, introduced into the washing liquid

Definition statement

This subclass/group covers:
Washing machines technically close to dishwashers (no drum is present).

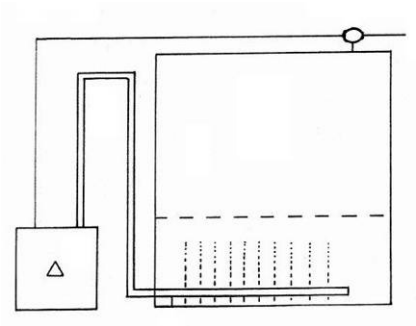

Informative references

Attention is drawn to the following places, which may be of interest for search:

Dishwashers wherein the circulation of the washing liquid is obtained by introducing compressed gas (e.g. air) in the washing liquid	A47L 15/10

D06F 18/00

Washing machines having receptacles, stationary for washing purposes, and having further drying means (details concerning drying only D06F 58/00)

Definition statement

This subclass/group covers:

Illustrative example of subject matter classified in this group.

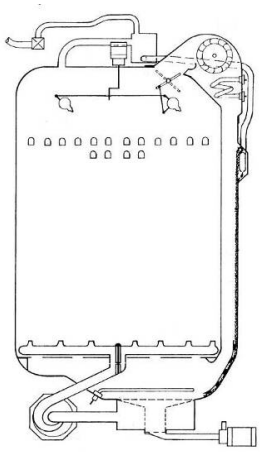

D06F 19/00

Washing machines using vibrations for washing purposes (devices of the vibrator type adapted to be used independently of any particular receptacle D06F 7/04)

Definition statement

This subclass/group covers:

Washing machines comprising vibrating devices.

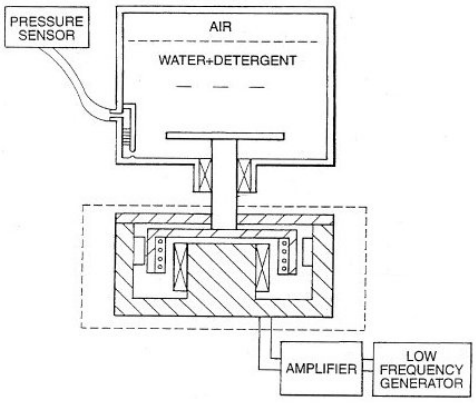

D06F 21/00

Washing machines with receptacles, e.g. perforated, having a rotary movement, e.g. oscillatory movement (with receptacles serving both for washing and centrifugally draining D06F 23/00, D06F 25/00; with receptacles moving bodily about an axis D06F 27/00; programme-control aspects D06F 33/00)

Definition statement

This subclass/group covers:

General concepts regarding the washing machine as a whole;

Machines which do not necessarily spin-dry and which may comprise lifters and/or impellers.

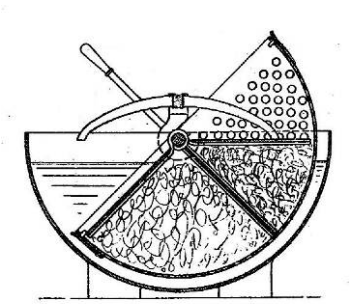

Synonyms and keywords

In patent documents the following words are used as a synoyms

In this patent documents, the following expressions/words "receptacle" and "drum" are often used as as synonyms.

In this patent documents, the following expressions/words "enclosing receptacle" and "tub" are often used as as synonyms.

In this patent documents, the following expressions/words "lifters" and " ribs" are often used as as synonyms.

D06F 21/02

about a horizontal axis

Definition statement

This subclass/group covers:

Illustrative example of subject matter classified in this group.

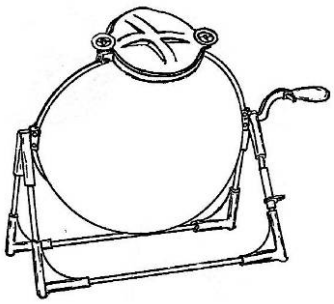

D06F 21/04

within an enclosing receptacle

Definition statement

This subclass/group covers:

Illustrative example of subject matter classified in this group.

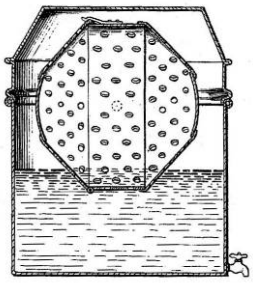

D06F 21/06

about a vertical axis

Definition statement

This subclass/group covers:
Illustrative example of subject matter classified in this group.

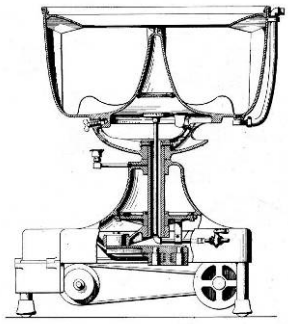

D06F 21/08

Within an enclosing receptacle

Definition statement

This subclass/group covers:
Washing machines comprising a tub (enclosing receptacle).

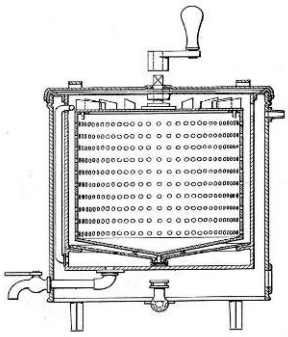

D06F 21/10

about an inclined axis

Definition statement

This subclass/group covers:
Illustrative example of subject matter classified in this group.

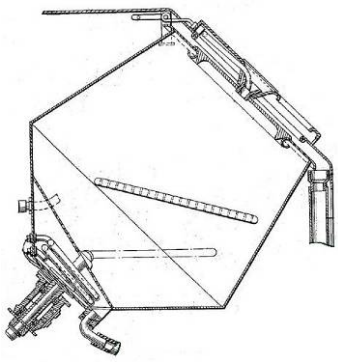

D06F 21/12

The receptacle having a wobbling motion

Definition statement

This subclass/group covers:
Illustrative example of subject matter classified in this group.

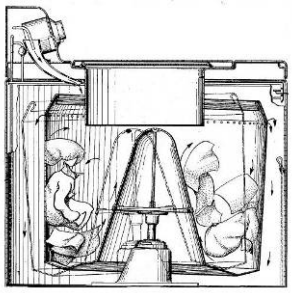

D06F 21/14

with rubbing or beating means not secured to, or forming part of, the receptacle

Definition statement

This subclass/group covers:
Illustrative example of subject matter classified in this group.

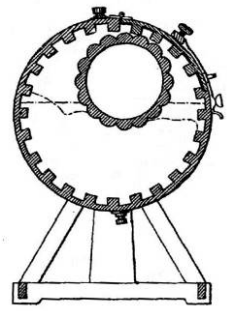

D06F 23/00

Washing machines with receptacles, e.g. perforated, having a rotary movement, e.g. oscillatory movement, the receptacle serving both for washing and centrifugally draining (with further drying means D06F 25/00; programme-control aspects D06F 33/00)

Definition statement

This subclass/group covers:

General layouts.

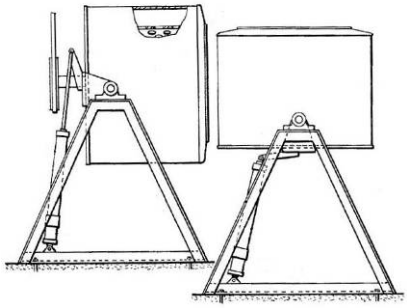

Synonyms and Keywords

In D06F 23/025, D06F 23/04, D06F 23/06 and D06F 23/065 the word "tub" is used as synonym for "drum".

D06F 23/02

and rotating or oscillating about a horizontal axis

Definition statement

This subclass/group covers:

European-style washing machines.

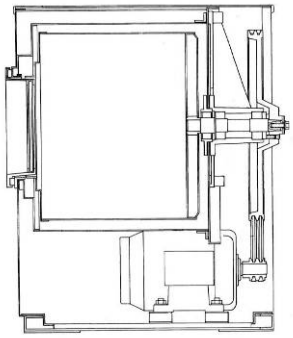

D06F 23/025

[N: with a rotatable imperforate tub]

Definition statement

This subclass/group covers:
Illustrative example of subject matter classified in this group.

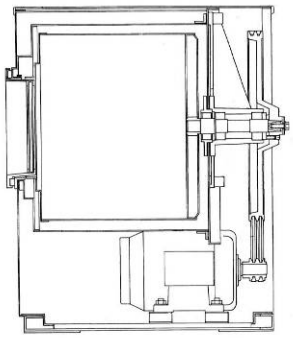

D06F 23/04

and rotating or oscillating about a vertical axis

Definition statement

This subclass/group covers:
Japanese and American-style washing machines.

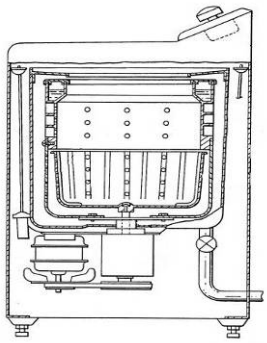

D06F 23/06

and rotating or oscillating about an inclined axis

Definition statement

This subclass/group covers:
Japanese and Korean-style washing machines.

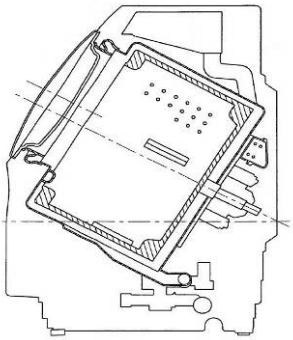

D06F 23/065

[N: with a rotatable imperforate tub]

Definition statement

This subclass/group covers:
Illustrative example of subject matter classified in this group.

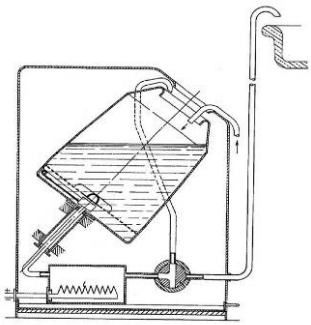

D06F 25/00

Washing machines with receptacles, e.g. perforated, having a rotary movement, e.g. oscillatory movement, the receptacle serving both for washing and centrifugally draining and having further drying means, e.g. using hot air (programme-control aspects D06F 33/00; details concerning drying only D06F 58/00)

Definition statement

This subclass/group covers:

General and simple aspects of the drying means.

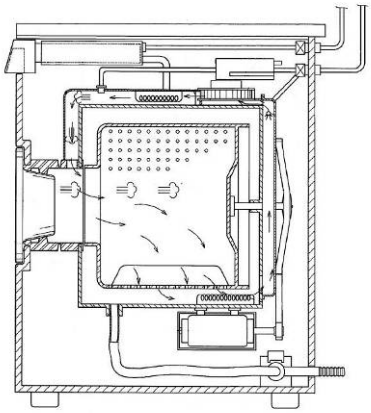

Synonyms and Keywords

In patent documents, the following expression/words "receptacle" and "drum are used as synonyms.

D06F 27/00

Washing machines with receptacles moving bodily, e.g. reciprocating, swinging

Definition statement

This subclass/group covers:

Illustrative example of subject matter classified in this group.

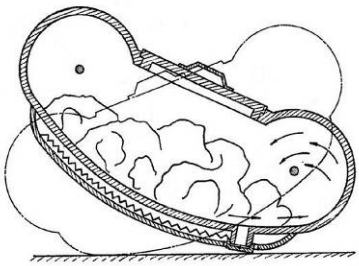

D06F 29/00

Combinations of a washing machine with other separate apparatus in a common frame or the like, e.g. with rinsing apparatus

Definition statement

This subclass/group covers:
Illustrative example of subject matter classified in this group.

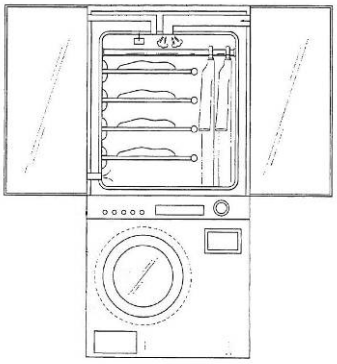

D06F 29/005

[N: the other separate apparatus being a drying appliance]

Definition statement

This subclass/group covers:
Illustrative example of subject matter classified in this group.

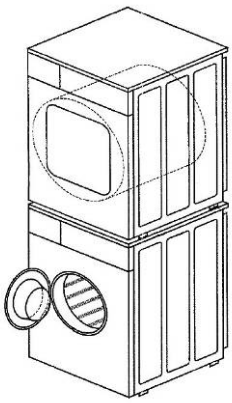

D06F 29/02

with liquid-extracting apparatus (with roller wringer D06F 45/12)

Definition statement

This subclass/group covers:

Illustrative example of subject matter classified in this group.

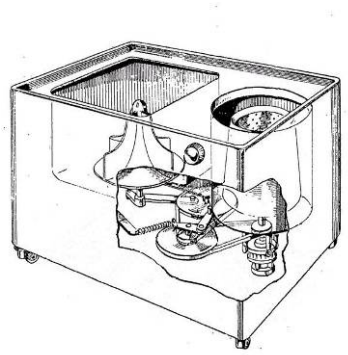

D06F 31/00

Washing installations comprising an assembly of several washing machines or washing units, e.g. continuous flow assemblies

Definition statement

This subclass/group covers:

Industrial devices for hospitals, hotels or professional laundries.

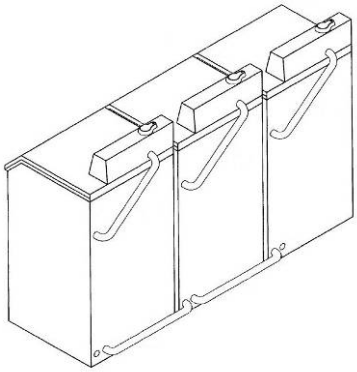

D06F 31/005

[N: consisting of one or more rotating drums through which the laundry passes in a continuous flow]

Definition statement

This subclass/group covers:

Batch or tunnel washing machines, wherein the drums have either vertical or

horizontal axes.

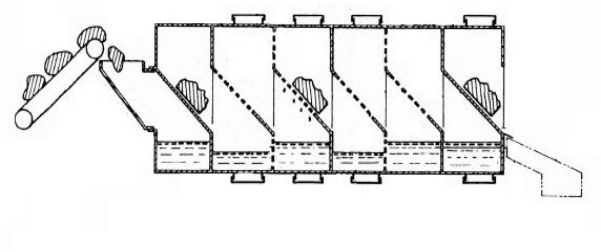

D06F 33/00

Controlling a series of operations in washing machines, e.g. programme-control arrangements for washing and drying cycles (D06F 31/00 takes precedence; programme-control systems in general G05B 19/00, G05G 21/00)

D06F 33/02

electrically

Definition statement

This subclass/group covers:

Electronic devices.

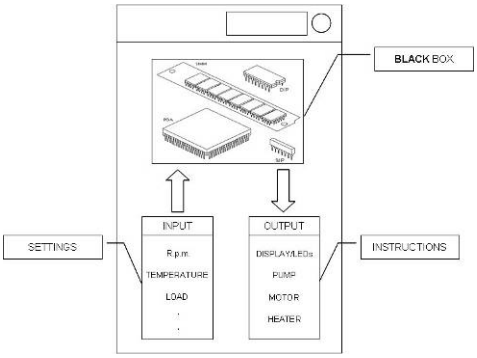

Informative references

Attention is drawn to the following places, which may be of interest for search:

Dishwashers / Devices for the automatic control of the different phases of cleaning.	A47L 15/46

D06F 33/06

substantially mechanically (e.g. using cams)

Definition statement

This subclass/group covers:
Illustrative example of subject matter classified in this group.

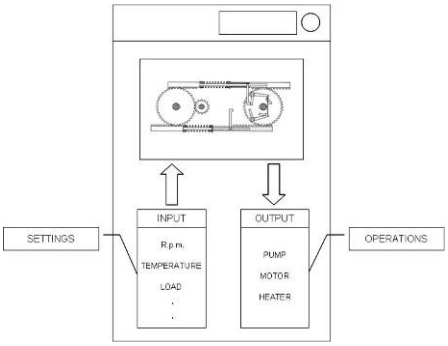

D06F 33/08

substantially hydraulically (e.g. using liquids)

Definition statement

This subclass/group covers:
Illustrative example of subject matter classified in this group.

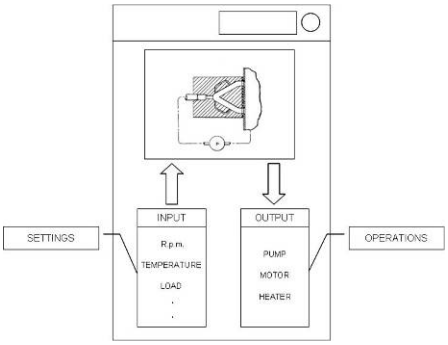

D06F 33/10

substantially pneumatically (e.g. using gas)

Definition statement

This subclass/group covers:
Illustrative example of subject matter classified in this group.

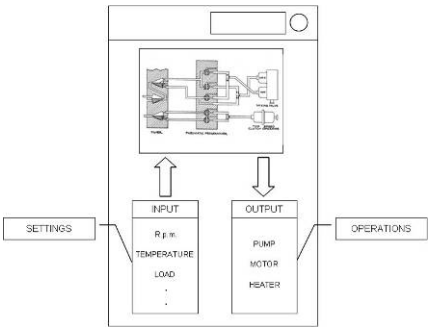

D06F 35/00

Washing machines, apparatus, or methods not otherwise provided for

Definition statement

This subclass/group covers:

Illustrative example of subject matter classified in this group.

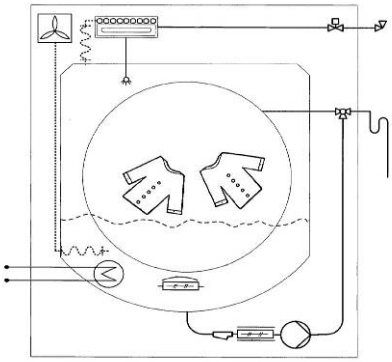

D06F 35/001

[N: using ozone]

Definition statement

This subclass/group covers:

Illustrative example of subject matter classified in this group.

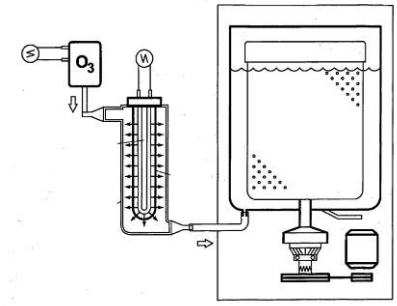

Informative references

Attention is drawn to the following places, which may be of interest for search:

Dishwashers / Sterilizing arrangements using ozone	A47L 15/424
Preparation of ozone in general	C01B 13/10

D06F 35/002

[N: using bubbles]

Definition statement

This subclass/group covers:
Illustrative example of subject matter classified in this group.

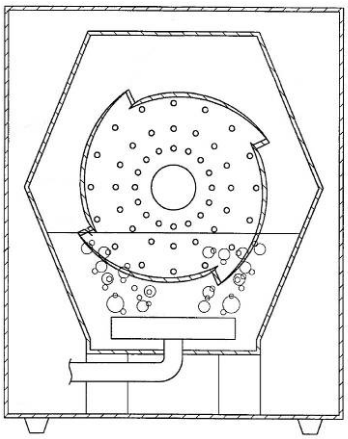

D06F 35/003

[N: using electrochemical cells]

Definition statement

This subclass/group covers:

Illustrative example of subject matter classified in this group.

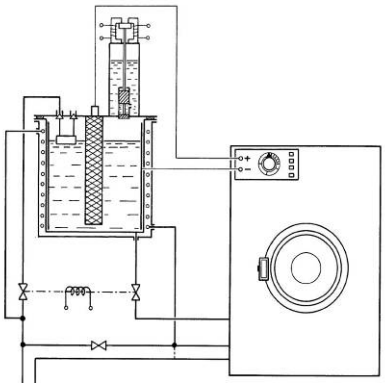

Informative references

Attention is drawn to the following places, which may be of interest for search:

Dishwashers / Sterilizing arrangements using electrochemical cells.	A47L 15/424

D06F 35/004

[N: using chlorine generators]

Definition statement

This subclass/group covers:
Illustrative example of subject matter classified in this group.

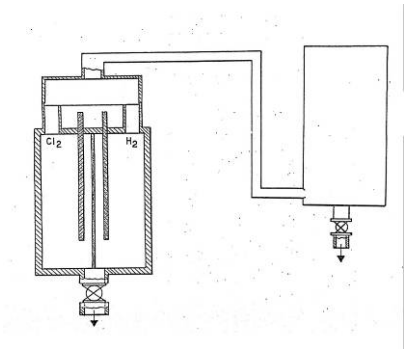

D06F 35/006

[N: for washing or rinsing only]

Definition statement

This subclass/group covers:
Illustrative example of subject matter classified in this group.

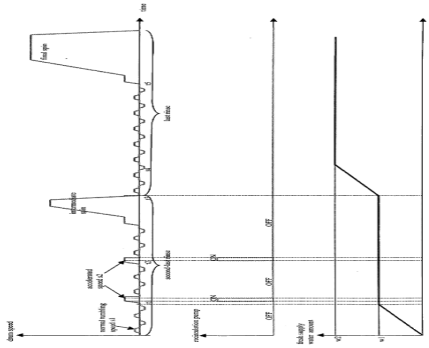

D06F 35/007

[N: for spin-drying only]

Definition statement

This subclass/group covers:
Methods and graphs.

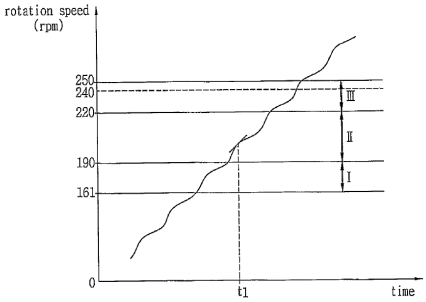

Special rules of classification within this group

Hardware are not to be classified here.

D06F 35/008

[N: for disinfecting the tub or the drum]

References relevant to classification in this group

This subclass/group does not cover:
Methods for disinfecting the clothes or the washing fluid.

D06F 37/00

Details of washing machines of kinds covered by groups D06F 21/00 to D06F 25/00, restricted to machines of these kinds (details of more general application D06F 39/00; details concerning drying only D06F 58/00)

Definition statement

This subclass/group covers:

Bearing supports (see figure - reference sign (2)).

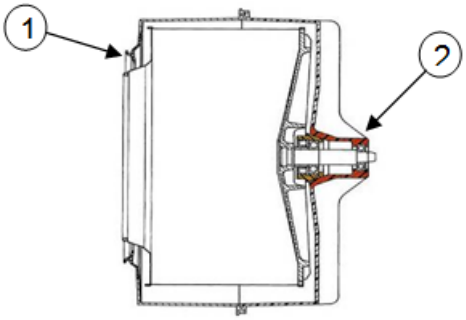

D06F 37/02

Rotary receptacles, e.g. drums

Definition statement

This subclass/group covers:

Details of the drum surface for drums having both horizontal and vertical axes.

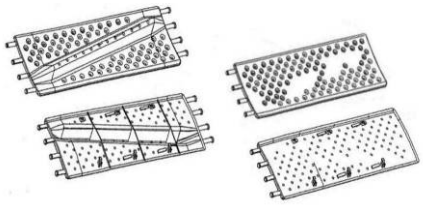

D06F 37/04

Adapted for rotation or oscillation about a horizontal or inclined axis

Definition statement

This subclass/group covers:

Illustrative example of subject matter classified in this group.

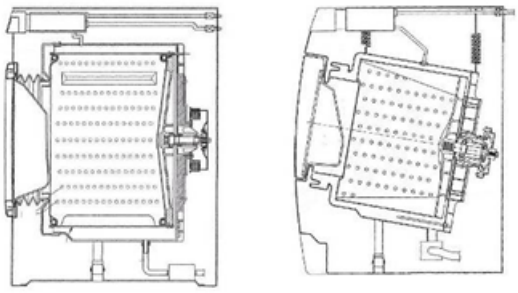

D06F 37/06

Ribs, lifters, or rubbing means forming part of the receptacle

Definition statement

This subclass/group covers:

Illustrative example of subject matter classified in this group.

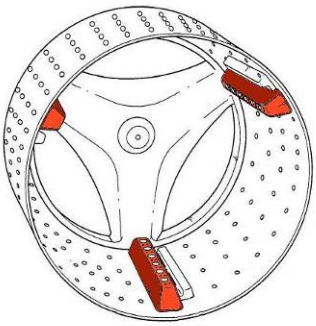

Informative references

Attention is drawn to the following places, which may be of interest for search:

Drums adapted for rotation about a vertical axis, characterised by the shape of the side wall;	FI D06F 37/12
Construction of the inside surface of the drum	F-terms 3B155/DC13
Projections or partitions	F-terms 3B155/DC14

D06F 37/065

[N: ribs or lifters having means for circulating the washing liquid]

Definition statement

This subclass/group covers:
Ribs/lifters comprising water passages (e.g. holes).

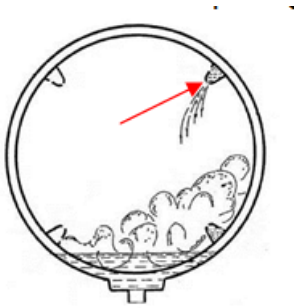

D06F 37/08

partitions

Definition statement

This subclass/group covers:
Shoe holders.

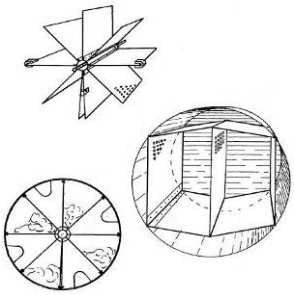

D06F 37/10

Doors; Securing means therefor

Definition statement

This subclass/group covers:
Only doors for "top-loaders" (e.g. drum doors).

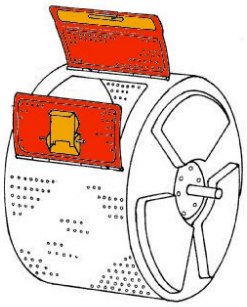

Informative references

Attention is drawn to the following places, which may be of interest for search:

Doors hinged to the tub	D06F 37/28.

D06F 37/12

Adapted for rotation or oscillation about a vertical axis

Definition statement

This subclass/group covers:
Illustrative example of subject matter classified in this group.

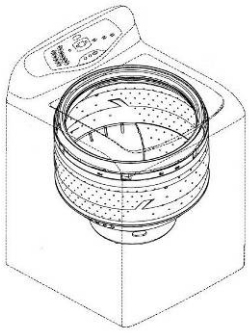

D06F 37/14

Ribs or rubbing means forming part of the receptacle

Definition statement

This subclass/group covers:
Illustrative example of subject matter classified in this group.

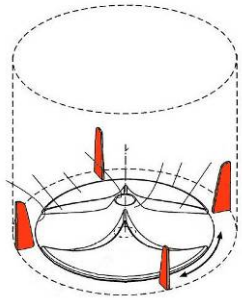

D06F 37/145

[N: ribs or lifters having means for circulating the washing liquid]

Definition statement

This subclass/group covers:
Illustrative example of subject matter classified in this group.

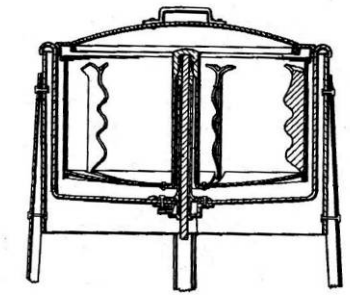

D06F 37/16

partitions

Definition statement

This subclass/group covers:
Illustrative example of subject matter classified in this group.

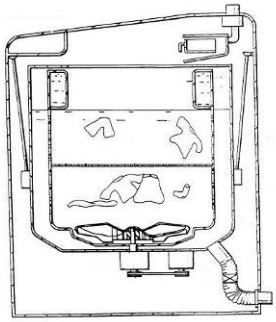

D06F 37/18

Doors or covers; Securing means therefor

Definition statement

This subclass/group covers:
Drum doors for drums having a vertical axis.

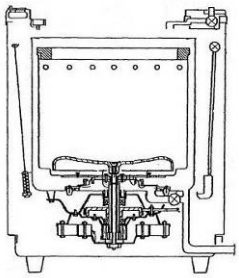

D06F 37/20

Mountings, e.g. resilient mountings, for the rotary receptacle, motor, tub, or casing; Preventing or damping vibrations ([N: counterweights mounted to the tub or mountings therefor D06F 37/265]; damping vibrations in general F16F)

Definition statement

This subclass/group covers:
Illustrative example of subject matter classified in this group.

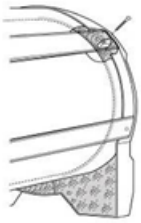

Informative references

Attention is drawn to the following places, which may be of interest for search:

Vibration dampers having rectilinearly moving Friction surfaces;	F16F 7/08
Vibration dampers of the cylinder piston type.	F16F 7/09

D06F 37/203

[N: Arrangements for detecting or measuring unbalance; Preventing vibrations by regulating the speed of rotation of the drum (sensing vibrations to control introduction of counterbalancing liquid D06F 37/225, D06F 37/245)]

Definition statement

This subclass/group covers:

Laundry weighing.

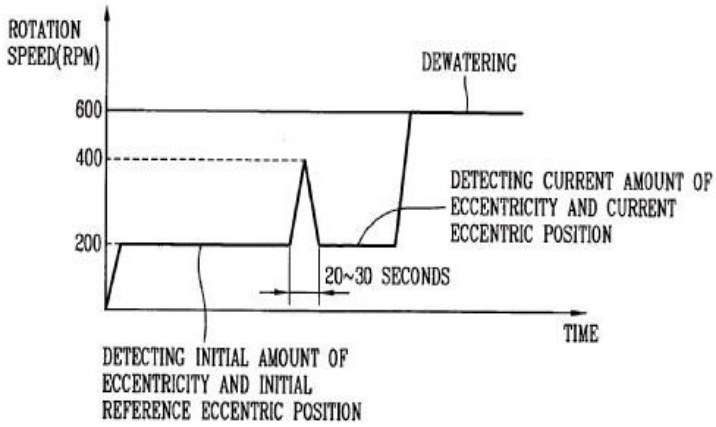

References relevant to classification in this group

This subclass/group does not cover:

Spin profiles	D06F 35/007

D06F 37/206

[N: Mounting of motor]

Definition statement

This subclass/group covers:
Illustrative example of subject matter classified in this group.

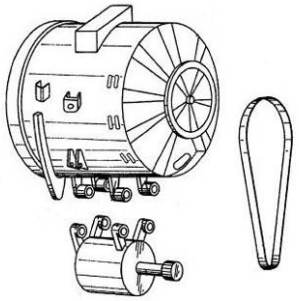

D06F 37/22

in machines with a receptacle rotating or oscillating about a horizontal axis

Definition statement

This subclass/group covers:
Dampers mounting and configuration.

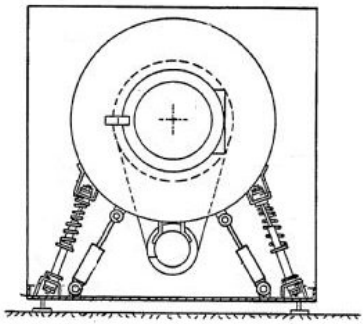

D06F 37/225

[N: Damping vibrations by displacing, supplying or ejecting a material, e.g. liquid, into or from counterbalancing pockets]

Definition statement

This subclass/group covers:

Illustrative example of subject matter classified in this group.

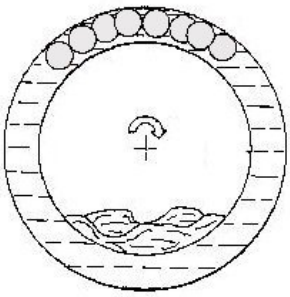

Informative references

Attention is drawn to the following places, which may be of interest for search:

Correcting or balancing weights by using rolling bodies	F16F 15/363

D06F 37/24

in machines with a receptacle rotating or oscillating about a vertical axis

Definition statement

This subclass/group covers:

Illustrative example of subject matter classified in this group.

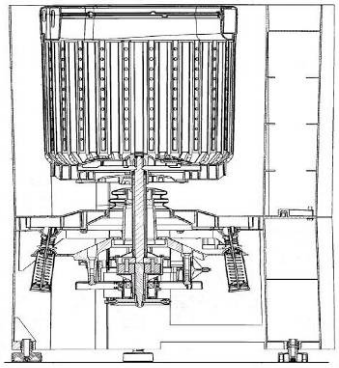

D06F 37/245

[N: Damping vibrations by displacing, supplying or ejecting a material, e.g. liquid, into or from counterbalancing pockets]

Definition statement

This subclass/group covers:

Illustrative example of subject matter classified in this group.

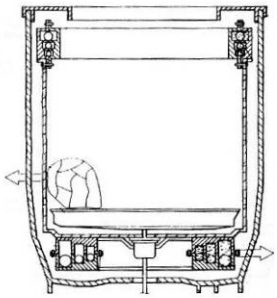

D06F 37/26

Casings; Tubs

Definition statement

This subclass/group covers:

Tubs (finished products).

References relevant to classification in this group

This subclass/group does not cover:

Casings	D06F 39/12

Informative references

Attention is drawn to the following places, which may be of interest for search:

Dishwashers / Details of the tub	A47L 15/4246

D06F 37/261

[N: Tubs made by a specially selected manufacturing process or characterised by their assembly from elements]

Definition statement

This subclass/group covers:

Illustrative example of subject matter classified in this group.

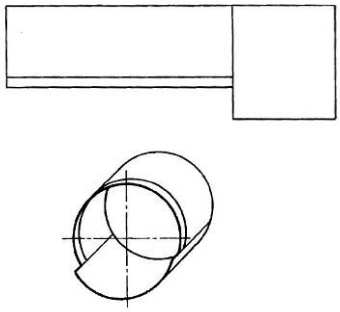

D06F 37/262

[N: made of plastic material, e.g. by injection moulding]

Definition statement

This subclass/group covers:

Illustrative example of subject matter classified in this group.

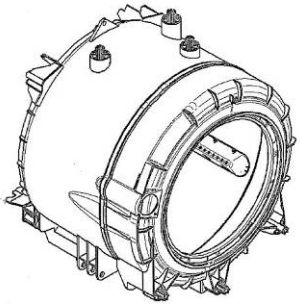

D06F 37/263

[N: assembled from at least two elements connected to each other; Connecting or sealing means therefor]

Definition statement

This subclass/group covers:

Illustrative example of subject matter classified in this group.

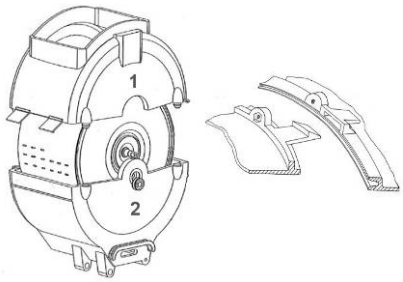

D06F 37/264

[N: Tubs provided with reinforcing structures, e.g. ribs, inserts, braces]

Definition statement

This subclass/group covers:
Illustrative example of subject matter classified in this group.

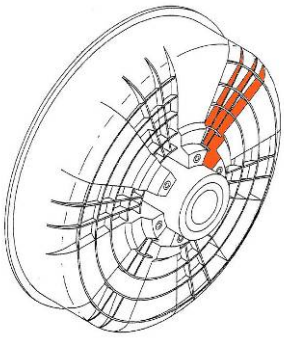

D06F 37/265

[N: Counterweights mounted to the tub; Mountings therefor]

Definition statement

This subclass/group covers:
Water pockets.

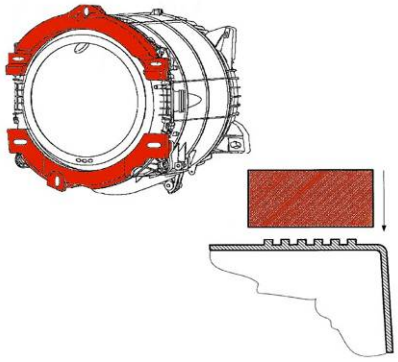

Informative references

Attention is drawn to the following places, which may be of interest for search:

Mortars or concrete compositions	C04B 28/00
Polymeric concrete compositions	C04B 26/06

Special rules of classification within this group

Bearings and bearing supports are not to be classified here.

D06F 37/266

[N: Gaskets mounted between tub and casing around the loading opening]

Definition statement

This subclass/group covers:

Illustrative example of subject matter classified in this group.

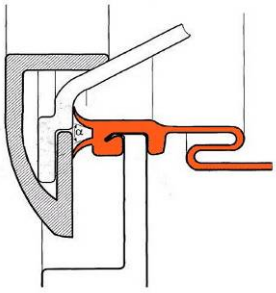

D06F 37/267

[N: Tubs specially adapted for mounting thereto components or devices not provided for in preceding subgroups (D06F 37/206 takes precedence)]

Definition statement

This subclass/group covers:

Special components mounted to the tub.

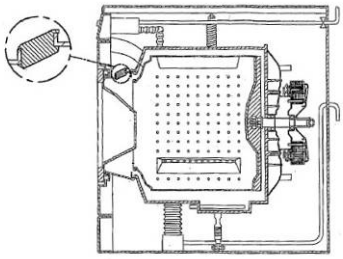

D06F 37/268

[N: for suspension devices]

Definition statement

This subclass/group covers:
Illustrative example of subject matter classified in this group.

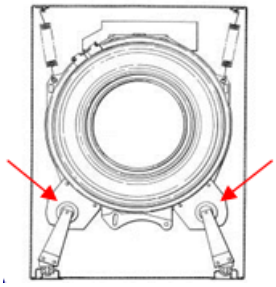

D06F 37/269

[N: for the bearing of the rotary receptacle]

Definition statement

This subclass/group covers:
Illustrative example of subject matter classified in this group.

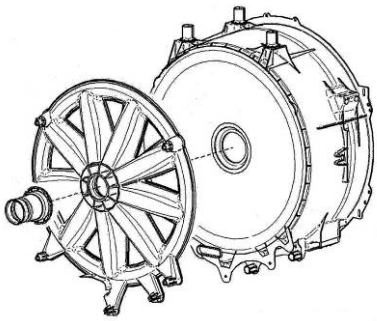

D06F 37/28

Doors; Security means therefor

Definition statement

This subclass/group covers:
Doors hinged to the tub.

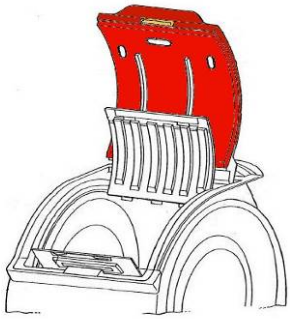

References relevant to classification in this group

This subclass/group does not cover:
Doors hinged to the casing.

D06F 37/30

Driving arrangements

Definition statement

This subclass/group covers:
Gears and motors (pure hardware).

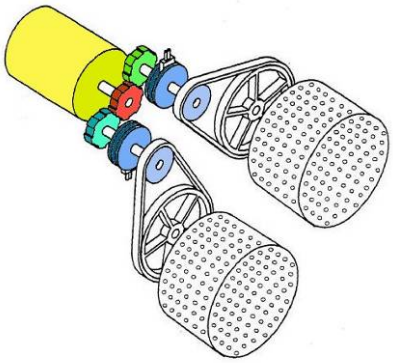

D06F 37/302

[N: Automatic drum positioning]

Definition statement

This subclass/group covers:

Automatic drum positioning devices for top-loaders, wherein the drum doors are aligned with the casing door in order to empty the drum.

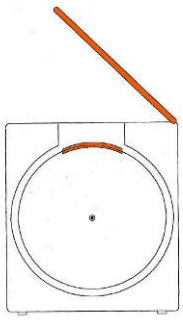

Informative references

Attention is drawn to the following places, which may be of interest for search:

Electric components	H02K 11/0015
Motors or generators.	H02K 29/08

D06F 37/304

[N: Electric speed control; Arrangements or adaptations of electric motors (D06F 37/203 takes precedence)]

Definition statement

This subclass/group covers:

Illustrative example of subject matter classified in this group.

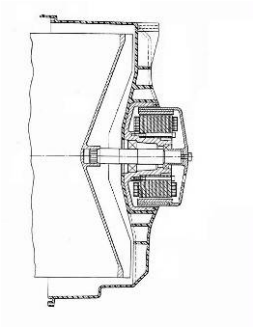

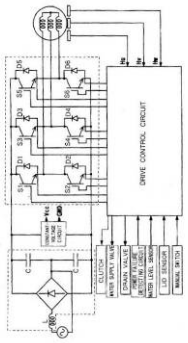

Informative references

Attention is drawn to the following places, which may be of interest for search:

Electric motors as such;	H02K 7/14
Combination of a motor and a further component, e.g. a circuit.	H02K 11/00

D06F 37/306

[N: Control of the reversing movement]

Definition statement

This subclass/group covers:

Illustrative example of subject matter classified in this group.

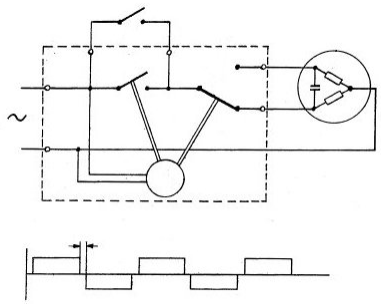

D06F 37/308

[N: Hydraulic or pneumatic speed control; Arrangements or adaptations of hydraulic or pneumatic motors]

Definition statement

This subclass/group covers:

Illustrative example of subject matter classified in this group.

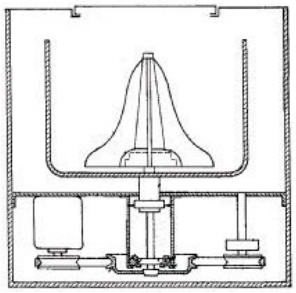

D06F 37/32

for rotating the receptacle at one speed only [N: (D06F 37/304, D06F 37/308 take precedence)]

Definition statement

This subclass/group covers:
Illustrative example of subject matter classified in this group.

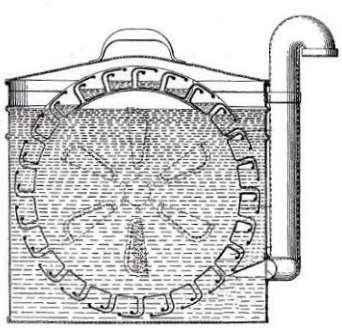

D06F 37/34

in opposite directions, e.g. oscillating

Definition statement

This subclass/group covers:
Illustrative example of subject matter classified in this group.

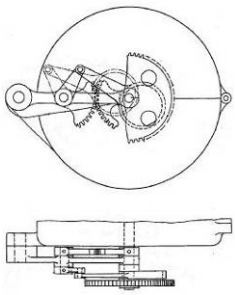

D06F 37/36

for rotating the receptacle at more than one speed [N: (D06F 37/304, D06F 37/308 take precedence)]

Definition statement

This subclass/group covers:
Illustrative example of subject matter classified in this group.

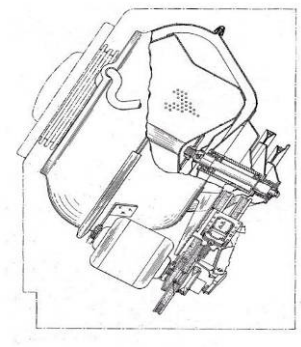

D06F 37/38

in opposite directions

Definition statement

This subclass/group covers:
Illustrative example of subject matter classified in this group.

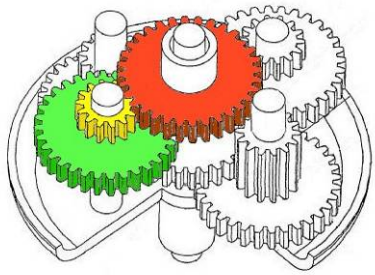

D06F 37/40

for driving the receptacle and an agitator or impeller, e.g. alternatively [N: (D06F 37/304, D06F 37/308 take precedence)]

Definition statement

This subclass/group covers:

Illustrative example of subject matter classified in this group.

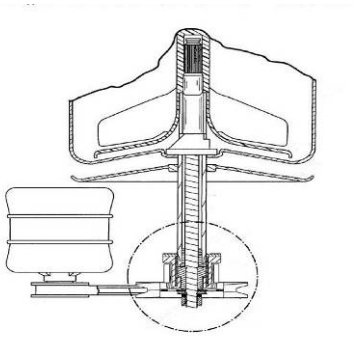

Informative references

Attention is drawn to the following places, which may be of interest for search:

Washing machines having receptacles,stationary for washing purposes, wherein the washing action is effected solely by circulation or agitation of the washing liquid	D06F 17/00
Washing machines having receptacles,stationary for washing purposes,with agitators therein contacting the articles being washed	D06F 13/00

D06F 37/42

Safety arrangements, e.g. for stopping rotation of the receptacle upon opening of the casing door

Definition statement

This subclass/group covers:

- Safety devices for avoiding leakage;
- Door locks for all kind of washing machines.

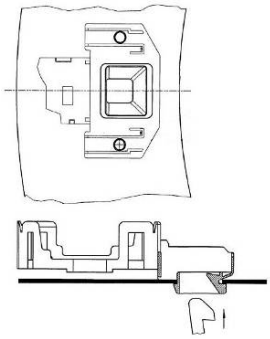

Informative references

Attention is drawn to the following places, which may be of interest for search:

Automatic drum positioning	D06F 37/302
Door locks for dishwashers	A47L 15/4259

D06F 39/00

Details of washing machines in so far as such details are not special to washing machines of groups D06F 21/00 to D06F 25/00 or to any particular type of washing machine defined in groups D06F 9/00 to D06F 19/00 or D06F 27/00

Definition statement

This subclass/group covers:

Illustrative example of subject matter classified in this group.

D06F 39/001

[N: Arrangements for transporting, moving, or setting washing machines; Protective arrangements for use during transport (transport in general B65)]

Definition statement

This subclass/group covers:

Illustrative example of subject matter classified in this group.

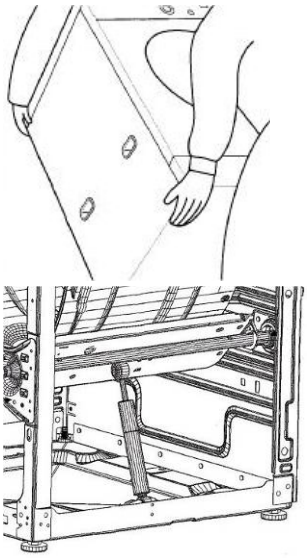

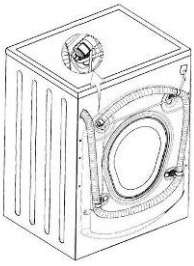

D06F 39/002

[N: Arrangements for detecting or measuring the condition of the laundry or the washing water, e.g. nature or weight of the laundry, turbidity of the washing water]

Definition statement

This subclass/group covers:

Illustrative example of subject matter classified in this group.

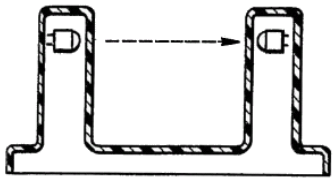

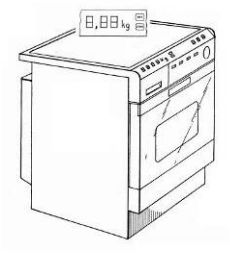

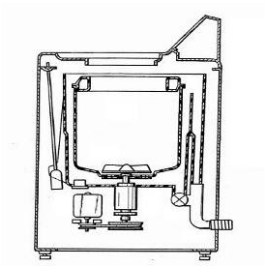

D06F 39/003

[N: Arrangements for measuring or detecting the condition of the laundry, e.g. nature or weight]

Definition statement

This subclass/group covers:

Illustrative example of subject matter classified in this group.

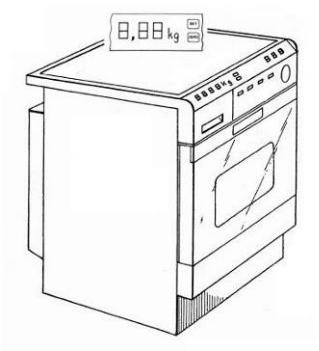

Informative references

Attention is drawn to the following places, which may be of interest for search:

Dishwashers / Arrangements for detecting the condition of the crockery (e.g. quantity)	A47L 15/4295

D06F 39/004

[N: Arrangements for measuring or detecting the condition of the washing water, e.g. turbidity]

Definition statement

This subclass/group covers:

- Devices for measuring the detergent concentration;
- Water hardness measuring devices.

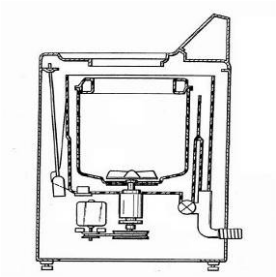

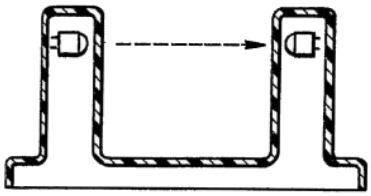

Informative references

Attention is drawn to the following places, which may be of interest for search:

Dishwashers / Arrangements for detecting the condition of the washing water	A47L 15/4297

D06F 39/005

[N: Arrangements for programme selection; Indication of the selected programme, programme progress or other variables, e.g. temperature (time-programme switches H01H 43/00)]

Definition statement

This subclass/group covers:

- Front panels;
- Jog dials, buttons, displays and keyboards mounted to the front panel.

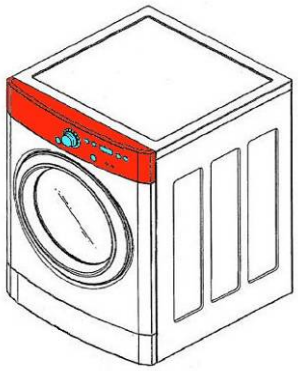

Informative references

Attention is drawn to the following places, which may be of interest for search:

Domestic laundry dryers / Controlling or regulating	D06F 58/28 D06F 2058/2883
Stoves or ranges / Details, e.g. control panels, illumination	F24C 7/082
Refrigerators / Arrangement or mounting of control or safety devices	F25D 29/00
Refrigerators / Mounting of control devices	F25D 29/005
Apparatuses for making beverages / Alarm-clock-controlled mechanisms for coffee or tea making apparatus	A47J 31/52
Programme-control systems / electric	G05B 19/02
Programme-control systems / using selector switches;	G05B 19/10
Arrangements for transmitting signals characterised by the use of a wireless link;	G08C 17/00
Circuit arrangements for providing remote indication of network conditions;	H02J 13/00
Computing / electrical digital data processing / input and output arrangements.	G06F 3/00

D06F 39/006

[N: Recovery arrangements, e.g. for the recovery of energy or water]

Definition statement

This subclass/group covers:

Illustrative example of subject matter classified in this group.

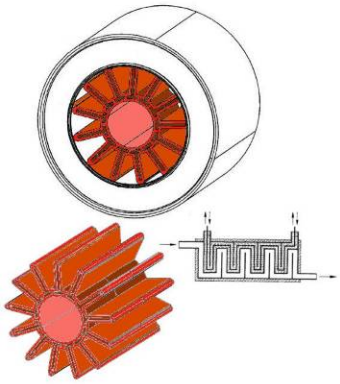

Informative references

Attention is drawn to the following places, which may be of interest for search:

Dishwashers / Recovery arrangements for the recovery of energy or water.	A47L 15/4291

D06F 39/007

[N: Arrangements of water softeners (water softeners in general C02F)]

Definition statement

This subclass/group covers:

Illustrative example of subject matter classified in this group.

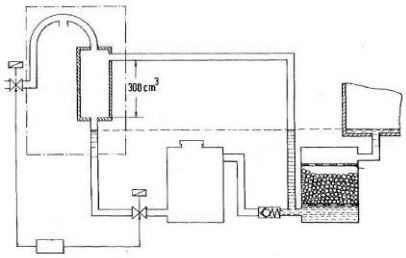

Informative references

Attention is drawn to the following places, which may be of interest for search:

Dishwashers / Water softeners	A47L 15/4229
Dishwashers / Details of the salt containe	A47L 15/4231

D06F 39/008

[N: Steam generating arrangements]

Definition statement

This subclass/group covers:
Illustrative example of subject matter classified in this group.

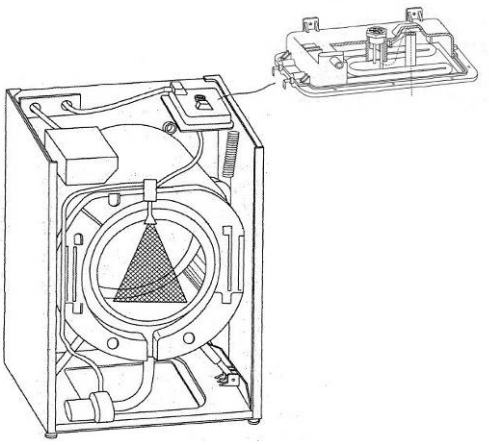

Informative references

Attention is drawn to the following places, which may be of interest for search:

Methods of steam generation in boilers heated electrically with water in reservoirs	F22B 1/284

D06F 39/02

Devices for adding soap or other washing agents

Definition statement

This subclass/group covers:
Multiple dosing systems.

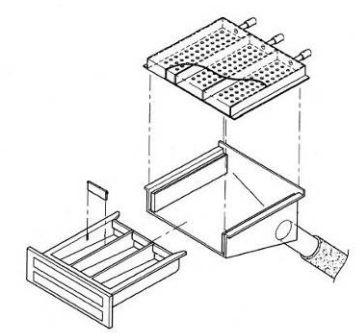

Informative references

Attention is drawn to the following places, which may be of interest for search:

Dishwashers / Devices for adding cleaning agents	A47L 15/44

D06F 39/022

[N: in a liquid state (D06F 39/024 takes precedence)]

Definition statement

This subclass/group covers:
Illustrative example of subject matter classified in this group.

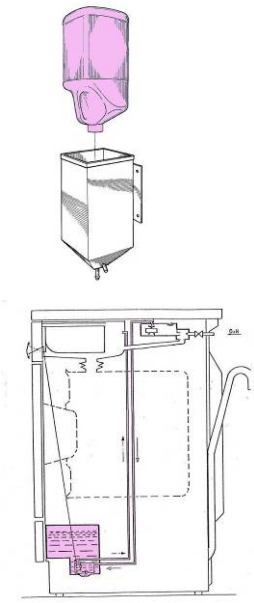

Informative references

Attention is drawn to the following places, which may be of interest for search:

Dishwashers / Devices for adding cleaning agents in the form of liquids.	A47L 15/4418

D06F 39/024

[N: mounted on the agitator or the rotating drum; Free body dispensers]

Definition statement

This subclass/group covers:

- Laundry balls for clothes dryers;
- Test sheets for testing the washing performance;
- Colour catcher sheets.

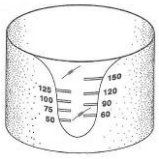

Informative references

Attention is drawn to the following places, which may be of interest for search:

Domestic laundry dryers / Laundry conditioning arrangements	D06F 58/203
Dishwashers / Detachable devices	A47L 15/4445
Free body dispensers	C11D 17/046

D06F 39/026

[N: the powder or tablets being added directly, e.g. without the need of a flushing liquid]

Definition statement

This subclass/group covers:

Illustrative example of subject matter classified in this group.

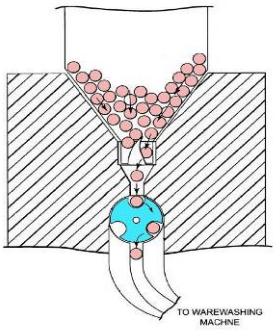

Informative references

Attention is drawn to the following places, which may be of interest for search:

Dishwashers / Devices for adding cleaning agents	A47L 15/44
Dishwashers / Devices for adding cleaning agents by tipping containers;	A47L 15/4409
Detergent tablets	C11D 17/0039
Detergent tablets	C11D 17/0073

D06F 39/028

[N: Arrangements for selectively supplying water to detergent compartments]

Definition statement

This subclass/group covers:

Illustrative example of subject matter classified in this group.

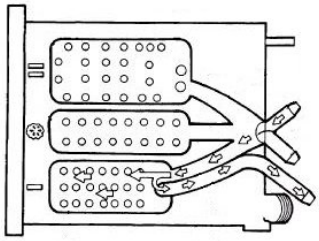

D06F 39/04

Heating arrangements

Definition statement

This subclass/group covers:
Illustrative example of subject matter classified in this group.

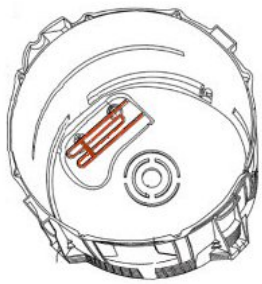

Informative references

Attention is drawn to the following places, which may be of interest for search:

Dishwashers / water-heater arrangements	A47L 15/4285

Special rules of classification within this group

Steam devices are not to be classified here.

D06F 39/045

[N: Temperature measuring or regulating devices]

Definition statement

This subclass/group covers:
Thermostats.

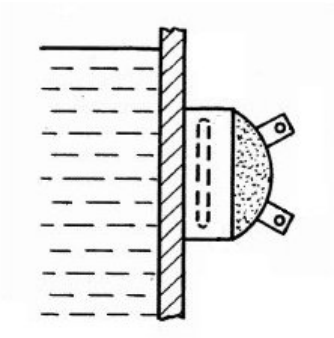

Informative references

Attention is drawn to the following places, which may be of interest for search:

D06F 39/06

Arrangements for preventing or destroying scum

Definition statement

This subclass/group covers:
Sensors.

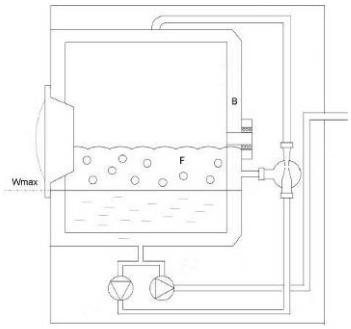

D06F 39/08

Liquid supply (1) or discharge (2) arrangements (supplying liquid detergent D06F 39/02)

Definition statement

This subclass/group covers:
Illustrative example of subject matter classified in this group.

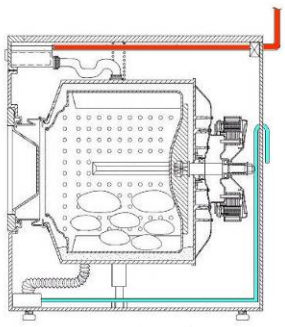

Informative references

Attention is drawn to the following places, which may be of interest for search:

Dishwashers / Water supply / recirculation arrangements	A47L 15/4214
Sensors	G01M 3/3245, G01M 3/186, G05D 7/01

D06F 39/081

[N: Safety arrangements for preventing water damage]

Definition statement

This subclass/group covers:

Water stopping devices (safety devices mounted to the tap).

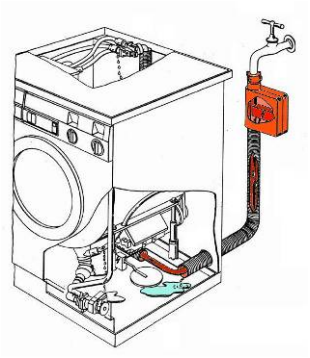

Informative references

Attention is drawn to the following places, which may be of interest for search:

Dishwashers / Safety arrangements for preventing water damage	A47L 15/421
Investigating fluid-tightness of structures / by detecting presence of fluid at the leakage point	G01M 3/04

D06F 39/082

[N: detecting faulty draining operations, e.g. filter blockage, faulty pump]

Definition statement

This subclass/group covers:

Illustrative example of subject matter classified in this group.

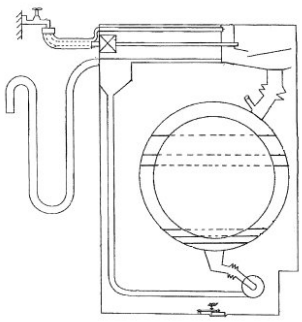

D06F 39/083

[N: Liquid discharge (1) or recirculation (2) arrangements]

Definition statement

This subclass/group covers:
Illustrative example of subject matter classified in this group.

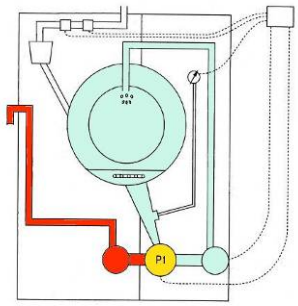

Informative references

Attention is drawn to the following places, which may be of interest for search:

Control of flow / without auxiliary power	G05D 7/01

D06F 39/085

[N: Arrangements or adaptations of pumps (pumps in general F04)]

Definition statement

This subclass/group covers:
Pumps specially adapted for washing machines.

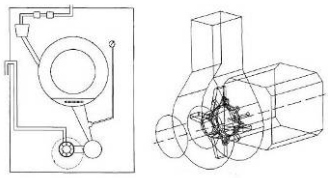

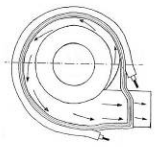

Informative references

Attention is drawn to the following places, which may be of interest for search:

Dishwashers / Recirculation or discharge pumps	A47L 15/4225

D06F 39/086

[N: Arrangements for avoiding detergent wastage in the discharge conduit]

Definition statement

This subclass/group covers:

Non-return valves (e.g. ball or flap valves).

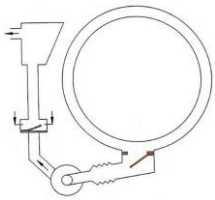

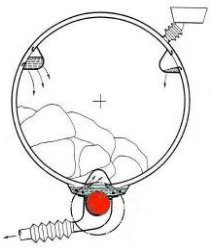

Informative references

Attention is drawn to the following places, which may be of interest for search:

Valves in general	F16K

D06F 39/087

[N: Water level measuring or regulating devices]

Definition statement

This subclass/group covers:
Illustrative example of subject matter classified in this group.

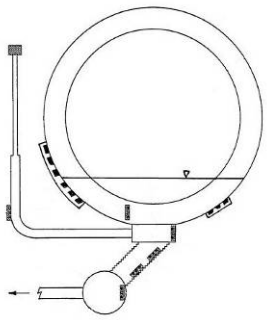

Informative references

Attention is drawn to the following places, which may be of interest for search:

Dishwashers / Water level measuring devices	A47L 15/4244
Water supply with cold and hot water	D06F 2204/088

D06F 39/088

[N: Liquid supply arrangements]

Definition statement

This subclass/group covers:
Illustrative example of subject matter classified in this group.

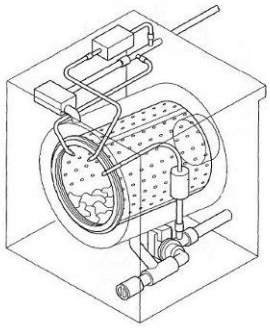

Informative references

Attention is drawn to the following places, which may be of interest for search:

Dishwashers,Water supply,recirculation arrangements	A47L 15/4214

D06F 39/10

Filtering arrangements

Definition statement

This subclass/group covers:
Filters disposed in the water circuit.

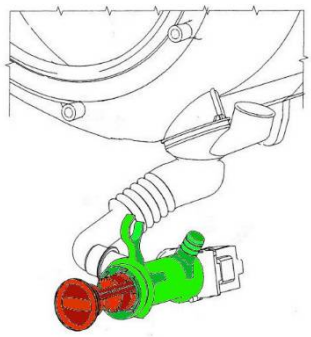

Informative references

Attention is drawn to the following places, which may be of interest for search:

Dishwashers / Water filters;	A47L 15/4202
Dishwashers / Flat filters	A47L 15/4204
Dishwashers / Tubular filters	A47L 15/4206
Dishwashers / Filters / Arrangements for avoiding clogging	A47L 15/4208

D06F 39/12

Casings; Tubs

Definition statement

This subclass/group covers:
Casings.

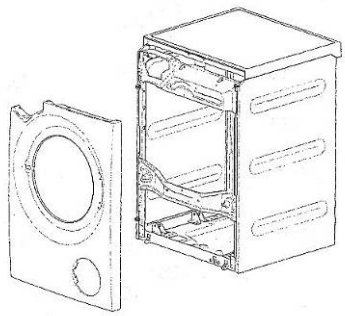

References relevant to classification in this group

This subclass/group does not cover:

Tubs	D06F 37/26

Informative references

Attention is drawn to the following places, which may be of interest for search:

Dishwasher / Details of the casing	A47L 15/4251
Kitchen cabinets / Worktops	A47B 77/022
Domestic plumbing installations / Sinks	E03C 1/184

D06F 39/125

[N: Supporting arrangements for the casing, e.g. rollers or legs]

Definition statement

This subclass/group covers:
Pedestals.

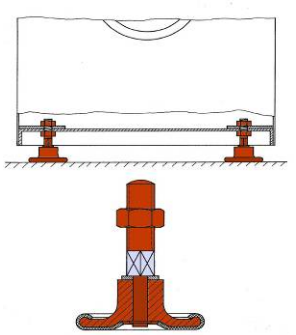

Informative references

Attention is drawn to the following places, which may be of interest for search:

Dishwasher / details of the casing / Rollers or supporting legs	A47L 15/4253
Legs or bases	FTERM-3B155/DA13
Furniture / Adjustable feet having screw means;	A47B 91/022
Furniture / Adjustable feet;	A47B 91/02
Machine casings / Attaching supporting legs on foundations	F16M 7/00

D06F 39/14

Doors or covers; Securing means therefor

Definition statement

This subclass/group covers:

- Doors hinged to the casing for both top- and front-loaders;
- Door hinges;
- Door locks.

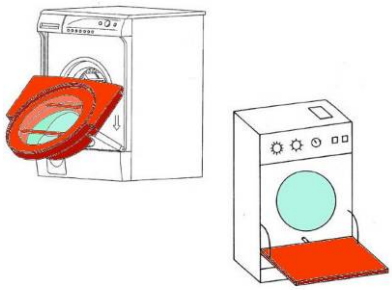

References relevant to classification in this group

This subclass/group does not cover:

Doors hinged to the tub:	D06F 37/28
Doors hinged to the drum:	D06F 37/10

Informative references

Attention is drawn to the following places, which may be of interest for search:

Dishwashers / Details of the casing / Locks	A47L 15/4259
Dishwashers / Details of the casing / Hinges	A47L 15/4261

D06F 41/00

Rinsing apparatus

Definition statement

This subclass/group covers:

Illustrative example of subject matter classified in this group.

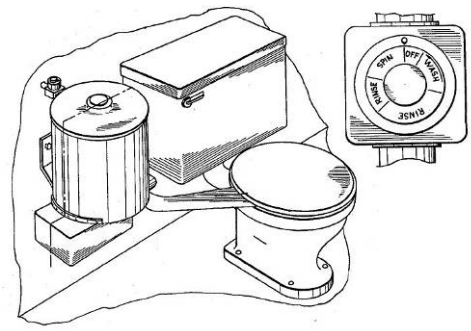

D06F 43/00

Dry-cleaning apparatus [N: or methods] using volatile solvents (D06F 9/00 to D06F 41/00 take precedence)

Definition statement

This subclass/group covers:

Illustrative example of subject matter classified in this group.

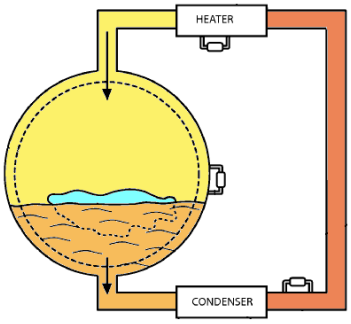

Informative references

Attention is drawn to the following places, which may be of interest for search:

CO2 cleaning	B08B 7/0021

D06F 43/002

[N: Spotting apparatus]

Definition statement

This subclass/group covers:
Illustrative example of subject matter classified in this group.

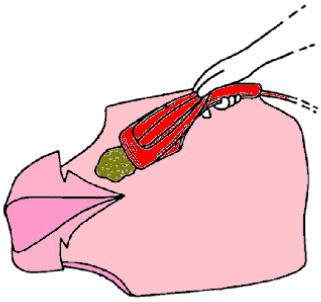

D06F 43/005

[N: Solvent condition control devices, e.g. humidity content]

Definition statement

This subclass/group covers:
Illustrative example of subject matter classified in this group.

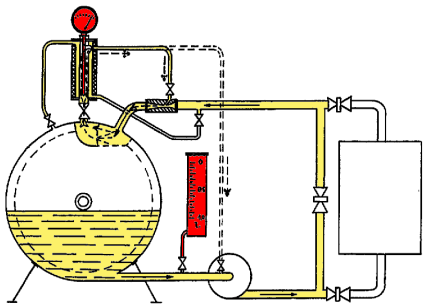

D06F 43/007

[N: Dry cleaning methods]

Definition statement

This subclass/group covers:
Illustrative example of subject matter classified in this group.

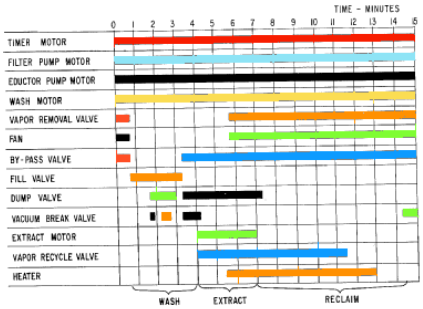

D06F 43/02

having one rotary cleaning receptacle only

Definition statement

This subclass/group covers:
Illustrative example of subject matter classified in this group.

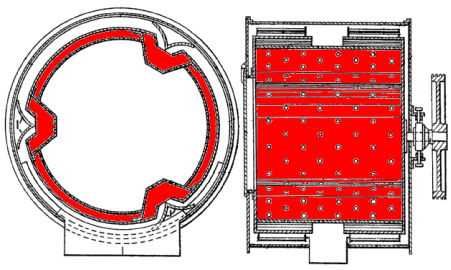

D06F 43/04

having more than one rotary cleaning receptacle

Definition statement

This subclass/group covers:

Illustrative example of subject matter classified in this group.

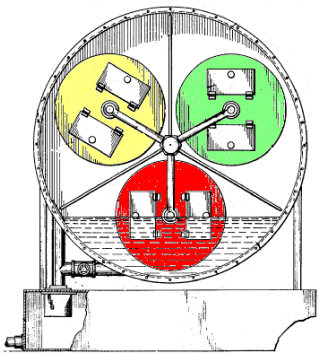

D06F 43/06

wherein the articles to be cleaned are passed through a cleaning chamber or bath

Definition statement

This subclass/group covers:

Illustrative example of subject matter classified in this group.

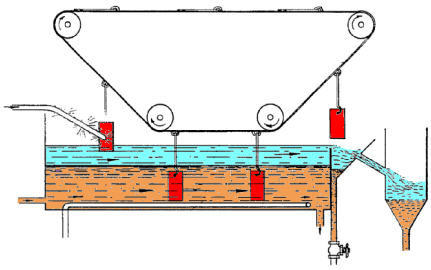

D06F 43/08

Associated apparatus for handling and recovering the solvents (separate apparatus for purifying dry-cleaning solvents B01D)

Definition statement

This subclass/group covers:

Illustrative example of subject matter classified in this group.

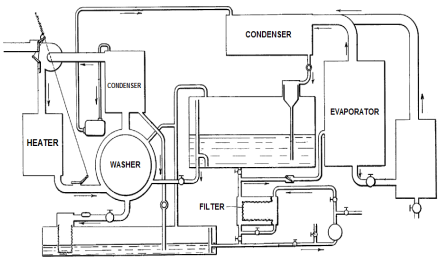

D06F 43/081

[N: Reclaiming or recovering the solvent from a mixture of solvent and contaminants, e.g. by distilling]

Definition statement

This subclass/group covers:

Illustrative example of subject matter classified in this group.

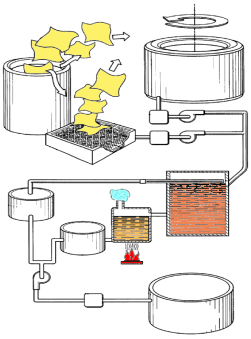

D06F 43/083

[N: Condensing arrangements]

Definition statement

This subclass/group covers:

Illustrative example of subject matter classified in this group.

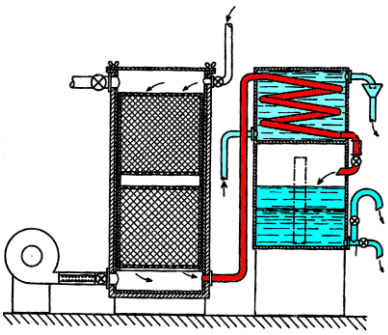

D06F 43/085

[N: Filtering arrangements; Filter cleaning; Filter-aid powder dispensers]

Definition statement

This subclass/group covers:

Illustrative example of subject matter classified in this group.

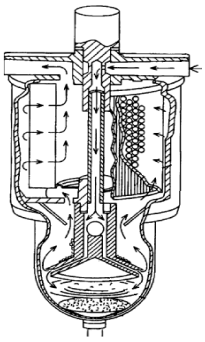

D06F 43/086

[N: Recovering the solvent from the drying air current]

Definition statement

This subclass/group covers:

Illustrative example of subject matter classified in this group.

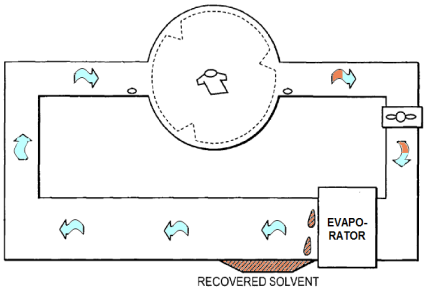

D06F 43/088

[N: Condensing arrangements]

Definition statement

This subclass/group covers:

Illustrative example of subject matter classified in this group.

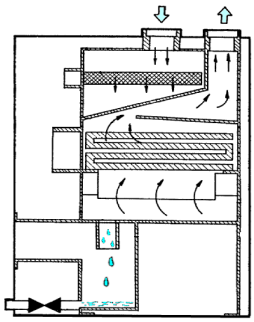

D06F 45/00

Wringing machines with two or more co-operating rollers; Similar cold-smoothing apparatus

Definition statement

This subclass/group covers:
Illustrative example of subject matter classified in this group.

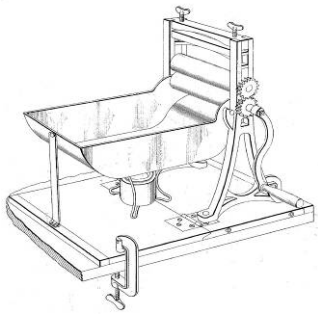

D06F 45/02

wherein the pressure is transmitted by spring means

Definition statement

This subclass/group covers:
Illustrative example of subject matter classified in this group.

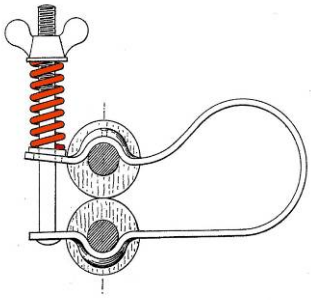

D06F 45/04

with hand-operated quick-release means

Definition statement

This subclass/group covers:
Illustrative example of subject matter classified in this group.

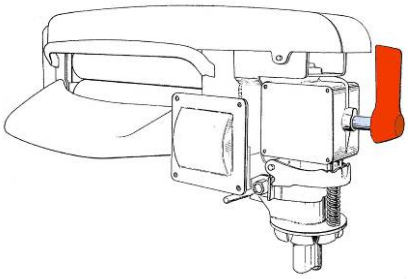

D06F 45/06

with automatically-operated quick-release means

Definition statement

This subclass/group covers:
Illustrative example of subject matter classified in this group.

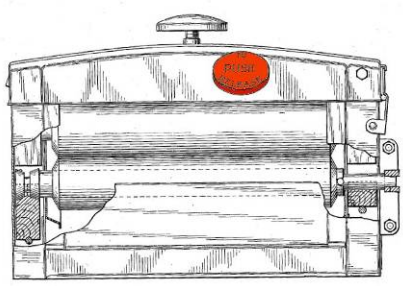

D06F 45/08

wherein the pressure is applied by fluid means

Definition statement

This subclass/group covers:
Illustrative example of subject matter classified in this group.

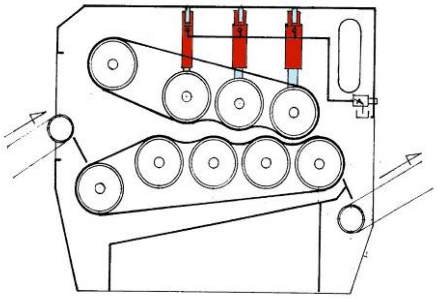

[media=media168., width=6.1cm, height=4.42cm]

D06F 45/10

with three or more co-operating rollers

Definition statement

This subclass/group covers:
Illustrative example of subject matter classified in this group.

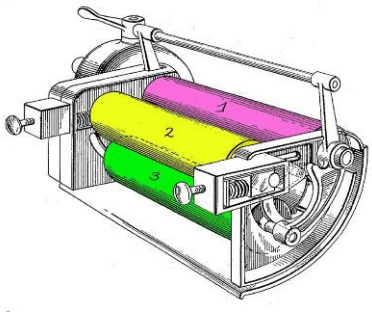

D06F 45/12

combined with washing machines

Definition statement

This subclass/group covers:
Illustrative example of subject matter classified in this group.

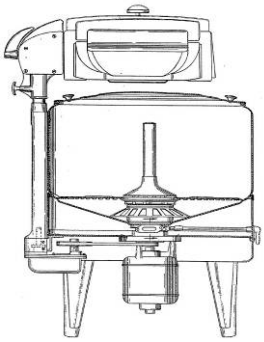

D06F 45/14

with means for removable attachment to washing machines, tables or other supports (combined with tables A47B)

Definition statement

This subclass/group covers:

Illustrative example of subject matter classified in this group.

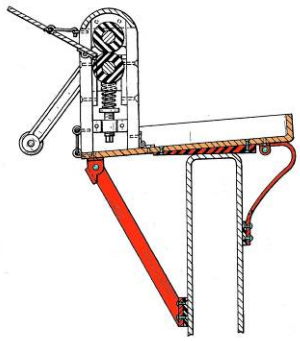

D06F 45/16

Details

Definition statement

This subclass/group covers:

Illustrative example of subject matter classified in this group.

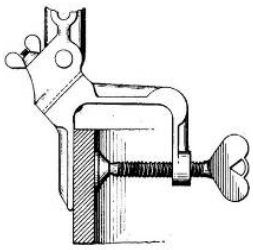

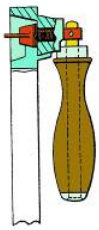

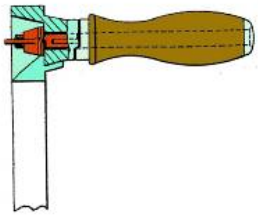

D06F 45/18

Driving or control arrangements for rotation of the rollers

Definition statement

This subclass/group covers:
Illustrative example of subject matter classified in this group.

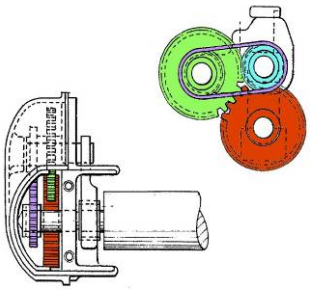

D06F 45/20

Toggle or other lever means for transmitting pressure to the rollers

Definition statement

This subclass/group covers:
Illustrative example of subject matter classified in this group.

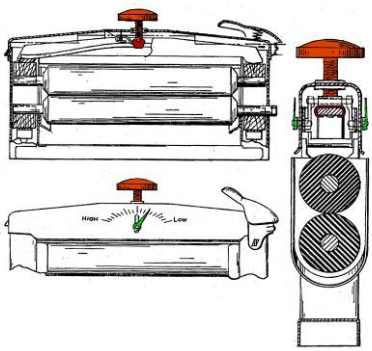

D06F 45/22

Rollers

Definition statement

This subclass/group covers:
Illustrative example of subject matter classified in this group.

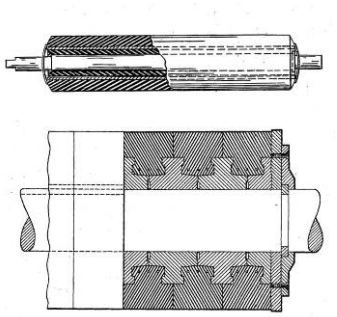

D06F 45/24

Frames guiding or housing the roller shafts; Stands for supporting the roller framework

Definition statement

This subclass/group covers:
Illustrative example of subject matter classified in this group.

D06F 45/26

Draining boards; Feed or discharge boards; Stripping means

Definition statement

This subclass/group covers:
Illustrative example of subject matter classified in this group.

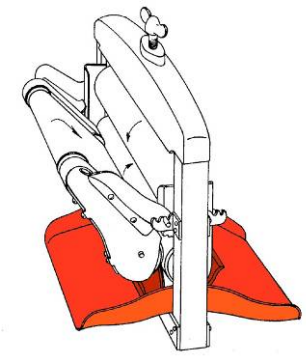

D06F 45/28

Belt arrangements for guiding the linen between the rollers

Definition statement

This subclass/group covers:
Illustrative example of subject matter classified in this group.

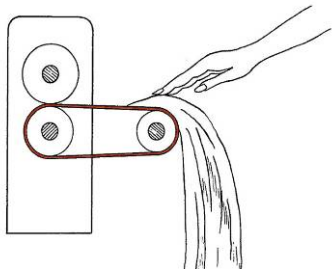

D06F 47/00

Apparatus of the press type for expelling water from the linen

Definition statement

This subclass/group covers:
Illustrative example of subject matter classified in this group.

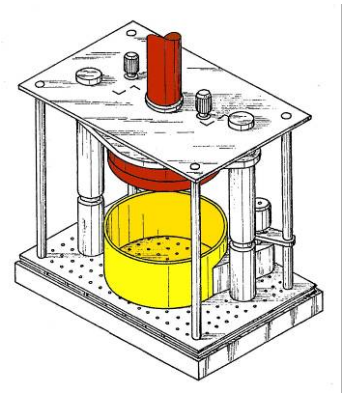

[media=media182., width=4.49cm, height=5.13cm]

D06F 47/02

by a mechanically-actuated ram

Definition statement

This subclass/group covers:
Illustrative example of subject matter classified in this group.

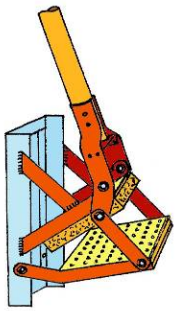

D06F 47/04

by a fluid-actuated ram

Definition statement

This subclass/group covers:
Illustrative example of subject matter classified in this group.

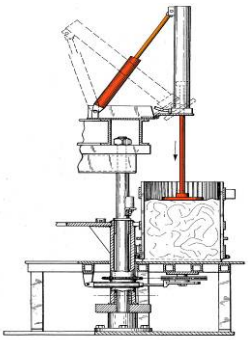

D06F 47/06

by a flexible diaphragm

Definition statement

This subclass/group covers:
Illustrative example of subject matter classified in this group.

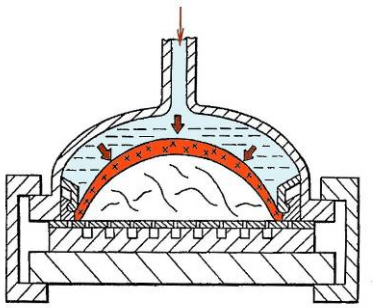

D06F 47/08

Covers; Securing means therefor

Definition statement

This subclass/group covers:

Illustrative example of subject matter classified in this group.

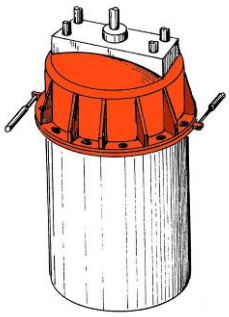

D06F 49/00

Domestic spin-dryers or similar spin-dryers not suitable for industrial use (centrifuges in general B04B)

Definition statement

This subclass/group covers:

Illustrative example of subject matter classified in this group.

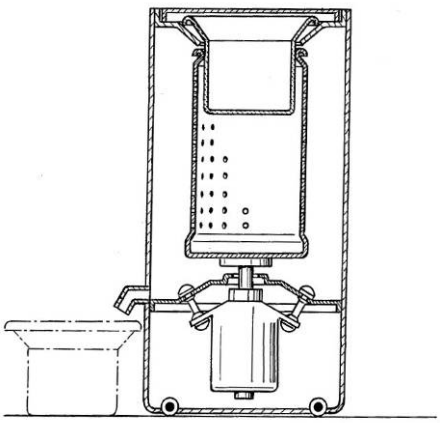

D06F 49/003

[N: Doors or covers; Safety arrangements]

Definition statement

This subclass/group covers:
Illustrative example of subject matter classified in this group.

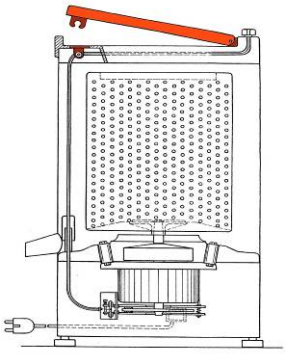

D06F 49/006

[N: Rinsing arrangements]

Definition statement

This subclass/group covers:
Illustrative example of subject matter classified in this group.

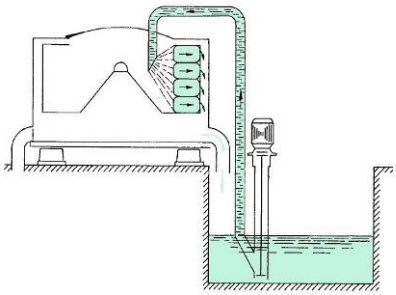

D06F 49/02

Bowl construction

Definition statement

This subclass/group covers:
Illustrative example of subject matter classified in this group.

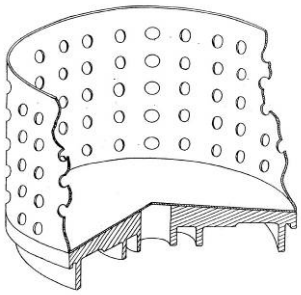

D06F 49/04

Bowl drive

Definition statement

This subclass/group covers:
Illustrative example of subject matter classified in this group.

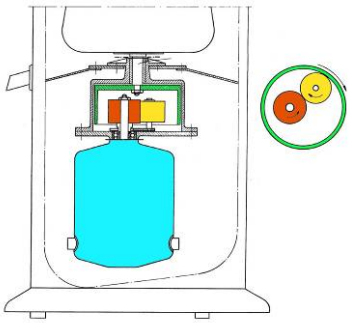

D06F 49/06

Mountings, e.g. resilient mountings, for the bowl or casings; Preventing or damping vibrations (damping vibrations in general F16F)

Definition statement

This subclass/group covers:

Illustrative example of subject matter classified in this group.

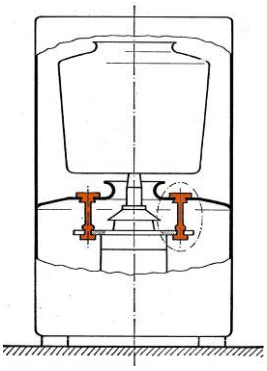

D06F 49/08

Liquid discharge arrangements

Definition statement

This subclass/group covers:

Illustrative example of subject matter classified in this group.

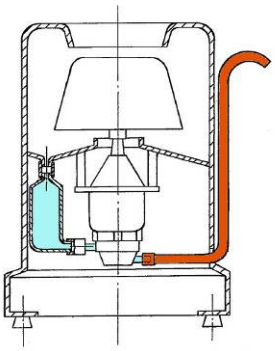

D06F 51/00

Apparatus for expelling or draining water from the linen, not provided for in the preceding groups

Definition statement

This subclass/group covers:
Illustrative example of subject matter classified in this group.

D06F 51/02

by twisting

Definition statement

This subclass/group covers:
Illustrative example of subject matter classified in this group.

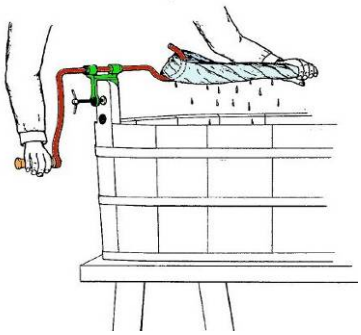

D06F 53/00

Clothes-lines; Supports therefor (drying frames incorporating clothes-lines D06F 57/00; supports or holders specially adapted or mounted for storing and repeatedly paying-out and restoring lengths of lines B65H 75/34; ropes, cables D07B)

Definition statement

This subclass/group covers:
Illustrative example of subject matter classified in this group.

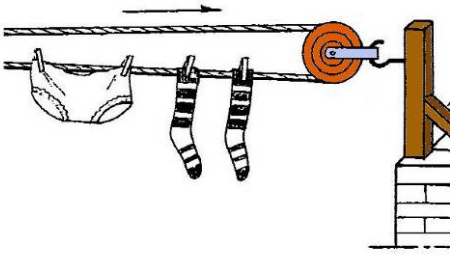

D06F 53/005

[N: Accessories, e.g. line cleaning devices, line protectors, clothes-pin holders]

Definition statement

This subclass/group covers:
Illustrative example of subject matter classified in this group.

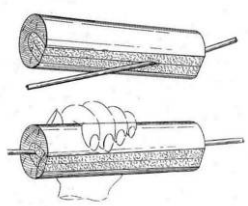

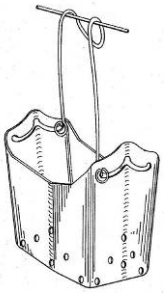

D06F 53/02

Clothes-lines

Definition statement

This subclass/group covers:
Particular kinds of cables.

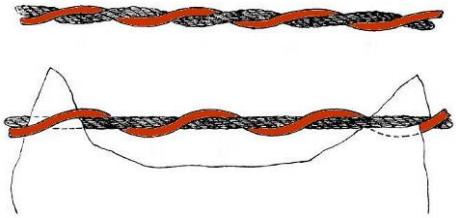

D06F 53/04

Supports, e.g. poles, props for clothes-lines (poles in general E04H)

Definition statement

This subclass/group covers:
Illustrative example of subject matter classified in this group.

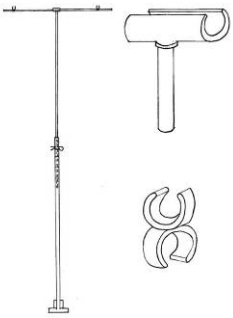

D06F 53/045

[N: comprising means for storing the clothes-line]

Definition statement

This subclass/group covers:
Illustrative example of subject matter classified in this group.

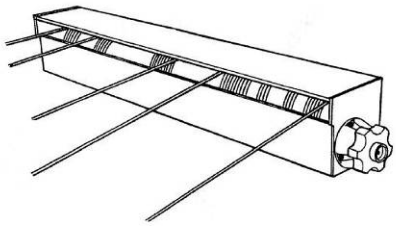

D06F 55/00

Clothes-pegs

Definition statement

This subclass/group covers:
Illustrative example of subject matter classified in this group.

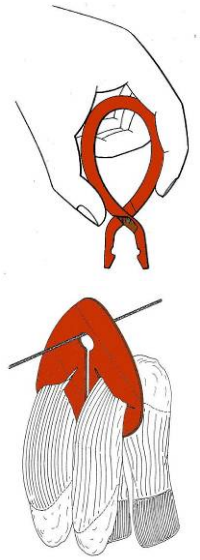

Informative references

Attention is drawn to the following places, which may be of interest for search:

Devices for keeping articles together during laundering	D06F 95/008
Clothing hangers	A47G 25/14

D06F 55/02

with pivoted [N: independent] clamping members

Definition statement

This subclass/group covers:
Illustrative example of subject matter classified in this group.

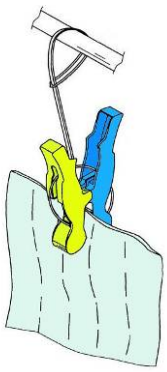

Informative references

Attention is drawn to the following places, which may be of interest for search:

Friction grip fastenings / using pivoting jaws	F16B 2/10

D06F 57/00

Supporting means, other than simple clothes-lines, for linen or garments to be dried or aired (in combination with means for heating or positive air circulation D06F 58/00, F26B; adapted to retain the shape of particular articles being dried D06F 59/00; clothing hangers, e.g. suit hangers A47G 25/14)

Informative references

Attention is drawn to the following places, which may be of interest for search:

Pivotal connections / Arrangements for locking	F16C 11/10

D06F 57/02

mounted on pillars, e.g. rotatably [N: (sockets or holders for poles or posts E04H 12/22)]

Definition statement

This subclass/group covers:

Illustrative example of subject matter classified in this group.

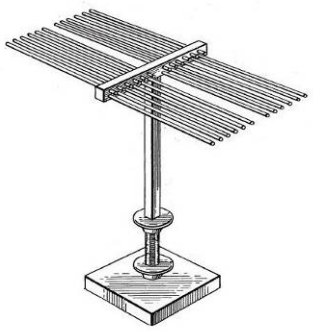

D06F 57/04

and having radial arms, e.g. collapsible

Definition statement

This subclass/group covers:
Illustrative example of subject matter classified in this group.

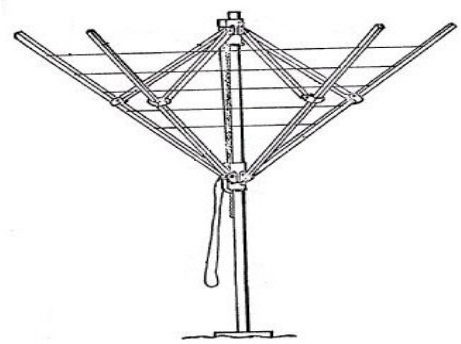

Informative references

Attention is drawn to the following places, which may be of interest for search:

Umbrellas Parasols	A45B 23/00 , A45B 25/00

D06F 57/06

comprising vertical members connected by horizontal bars

Definition statement

This subclass/group covers:
Supporting means foldable along a vertical axis.

D06F 57/08

Folding stands (D06F 57/06 takes precedence)

Definition statement

This subclass/group covers:
Supporting means foldable along a horizontal axis.

D06F 57/10

of the lazy-tongs type

Definition statement

This subclass/group covers:
Illustrative example of subject matter classified in this group.

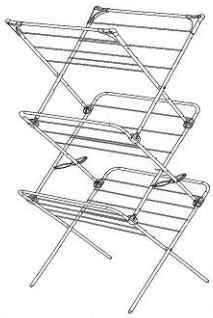

D06F 57/12

specially adapted for attachment to walls, ceilings, stoves, or other structures or objects

Definition statement

This subclass/group covers:

Illustrative example of subject matter classified in this group.

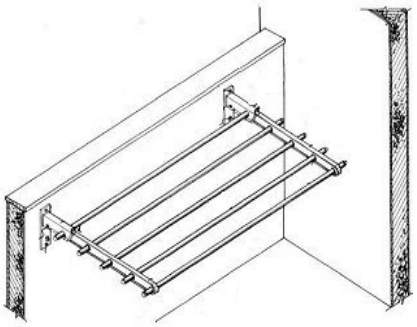

Informative references

Attention is drawn to the following places, which may be of interest for search:

Towel racks	A47K 10/04

D06F 57/122

[N: for attachment by clamping between two retaining-planes]

Definition statement

This subclass/group covers:

Illustrative example of subject matter classified in this group.

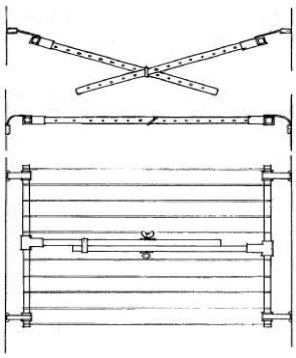

D06F 57/125

[N: for attachment to, or close to, the ceiling]

Definition statement

This subclass/group covers:
Illustrative example of subject matter classified in this group.

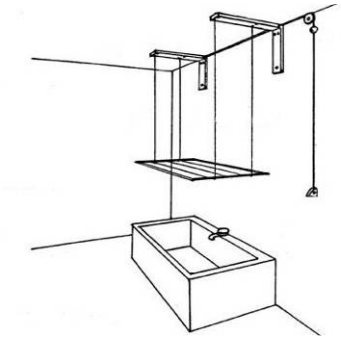

D06F 57/127

[N: for attachment or suspension to central heating radiators]

Definition statement

This subclass/group covers:
Illustrative example of subject matter classified in this group.

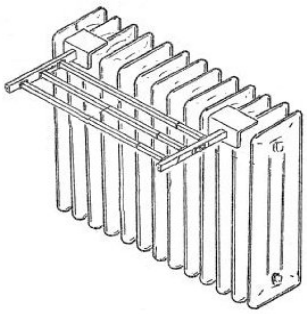

D06F 58/00

Domestic laundry driers (drying in general F26B)

Informative references

Attention is drawn to the following places, which may be of interest for search:

Dishwashers / Drying arrangements	A47L 15/48

D06F 58/02

having drier drums rotating about a horizontal axis

Definition statement

This subclass/group covers:
General details of laundry dryers (e.g. how the drying air circulates).

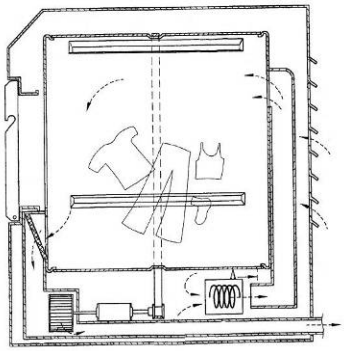

D06F 58/04

Details (controlling or regulating arrangements D06F 58/28)

Definition statement

This subclass/group covers:
Details of Clothes-dryers having horizontal axis.

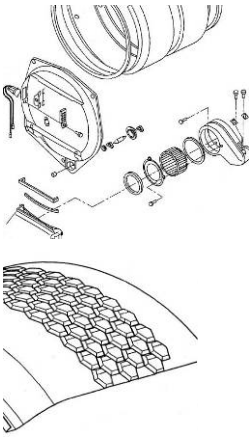

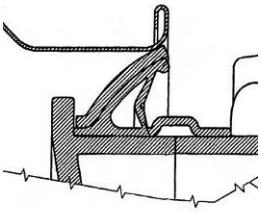

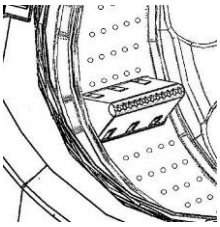

D06F 58/06

Mountings for the rotating drums

Definition statement

This subclass/group covers:
Non-rotating supports.

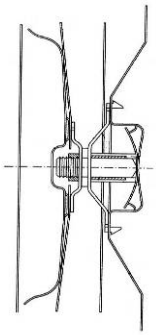

D06F 58/08

Driving arrangements

Definition statement

This subclass/group covers:
Details mounted between the drum and the motor (e.g. belts).

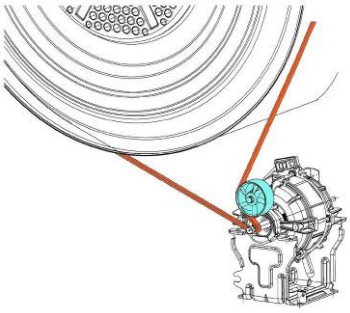

D06F 58/10

Drying cabinets or drying chambers having heating or ventilating means

Definition statement

This subclass/group covers:

Illustrative example of subject matter classified in this group.

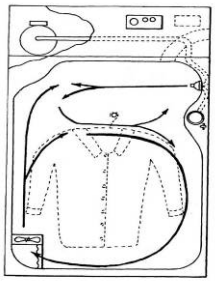

References relevant to classification in this group

This subclass/group does not cover:

Clothes dryers having a rotating drum	D06F 58/02

D06F 58/12

having conveying means for moving clothes, e.g. along an endless track

Definition statement

This subclass/group covers:

Conveying means for moving the clothes along an endless rotating screw.

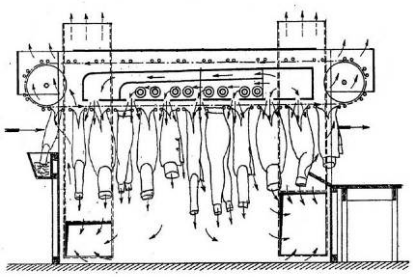

D06F 58/14

Collapsible drying cabinets; Wall mounted collapsible hoods

Definition statement

This subclass/group covers:
Portable drying devices.

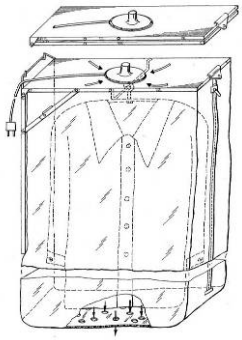

D06F 58/16

having heatable surfaces for contacting the laundry (D06F 59/00 takes precedence)

Definition statement

This subclass/group covers:
Illustrative example of subject matter classified in this group.

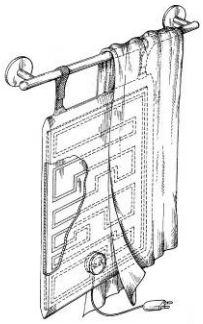

Informative references

Attention is drawn to the following places, which may be of interest for search:

Towel racks having drying means	A47K 10/06
Radiators per se	F24D

D06F 58/18

Detachable or door-mounted drying arrangements for washing machines

Definition statement

This subclass/group covers:

Illustrative example of subject matter classified in this group.

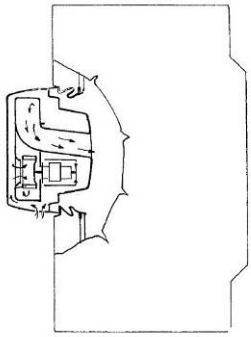

D06F 58/20

General details of domestic laundry driers (D06F 59/00 takes precedence)

Definition statement

This subclass/group covers:

- Vents or pipes;
- Air/air heat exchangers;
- Casing details specific to laundry dryers.

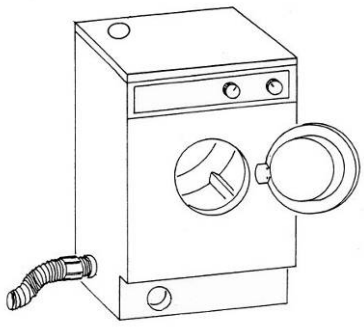

D06F 58/203

[N: Laundry conditioning arrangements]

Definition statement

This subclass/group covers:

Laundry dryers having wetting, starching and/or perfuming devices.

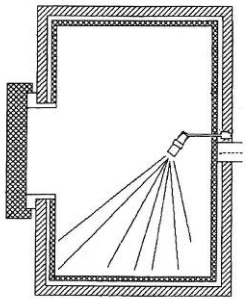

Informative references

Attention is drawn to the following places, which may be of interest for search:

Steam generators per se	F22B 1/28

D06F 58/206

[N: Heat pump arrangements]

Definition statement

This subclass/group covers:

Heat pump arrangements for domestic laundry dryers, e.g. heat pumps of the compressor type, of the sorption type or using thermo-electric elements (e.g. Peltier / Seebeck devices).

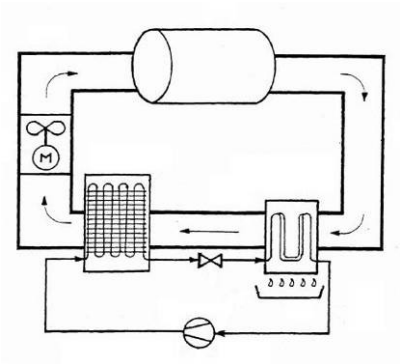

Informative references

Attention is drawn to the following places, which may be of interest for search:

Heat pumps

Drying arrangements for dishwashers / using condensers	A47L 15/483
Drying by condensing the moisture	F26B 21/086
Drying by using sorbent;	F26B 21/083
Heating arrangements	F26B 23/00
Combined heating and refrigeration systems	F25B 29/00
Heating and cooling	F25B 30/00
Air conditioning	F24F 5/0007

Thermo-electric heat pumps (e.g. Peltier)

Heating and cooling	F25B 11/00
Air conditioning	F24F 5/0042
Basic electric elements	H01L 35/00

D06F 58/22

Lint collecting arrangements

Definition statement

This subclass/group covers:

Illustrative example of subject matter classified in this group.

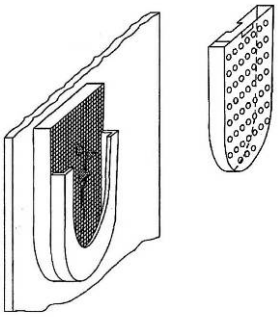

D06F 58/24

Condensing arrangements

Definition statement

This subclass/group covers:
Illustrative example of subject matter classified in this group.

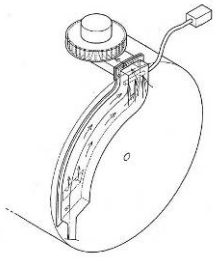

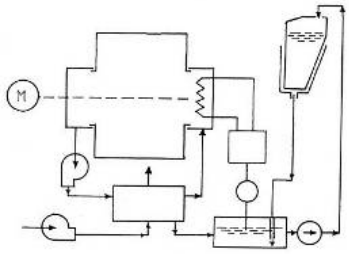

Informative references

Attention is drawn to the following places, which may be of interest for search:

Drying arrangements for dishwashers / using condensers	A47L 15/483
Heat exchangers	F28F, F28D

D06F 58/26

Heating arrangements, e.g. gas heating equipment (D06F 58/18 takes precedence)

Definition statement

This subclass/group covers:
Illustrative example of subject matter classified in this group.

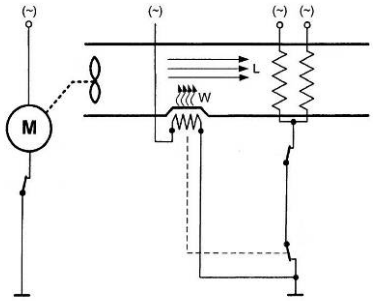

References relevant to classification in this group

This subclass/group does not cover:
Laundry dryers having gas heating devices.

D06F 58/263

[N: Gas heating equipment]

Definition statement

This subclass/group covers:
Laundry driers having gas heating devices.

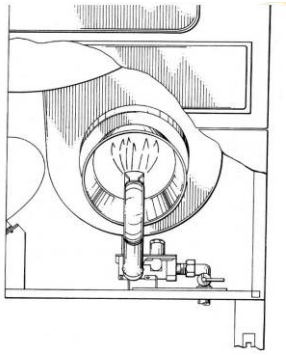

D06F 58/266

[N: Microwave heating equipment]

Definition statement

This subclass/group covers:

Illustrative example of subject matter classified in this group.

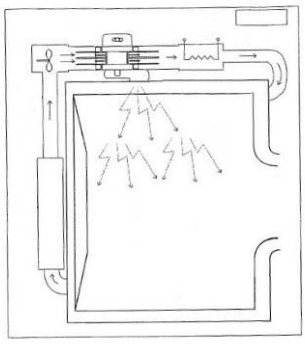

D06F 58/28

Controlling or regulating (controlling or regulating in general G05)

Definition statement

This subclass/group covers:

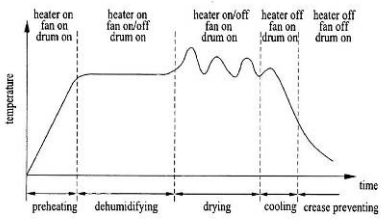

Informative references

Attention is drawn to the following places, which may be of interest for search:

Control of humidity using electric means	G05D 22/02

Special rules of classification within this group

Whenever an application is classified in D06F 58/28, the relevant Indexing Code should always be assigned (unless there is no relevant Indexing Code at all).

If a specific Indexing Code in the D06F 58/28 range is assigned to an application, said same application has also to be classified in D06F 58/28.

The relevant Indexing Codes are the following:

Controlling or regulating;	D06F 58/28
Manual setting	D06F 2058/2803
Setting of the intensity of the heater, motor or blower	D06F 2058/2806
Setting of load, quantity, weight, type of laundry or the like;	D06F 2058/2809
Setting of load, quantity, weight, type of laundry or the like;	D06F 2058/2809
Setting of drying time or timing for part of the programme	D06F 2058/2812
Automatic detection of the humidity of the laundry;	D06F 2058/2816
Detecting the air humidity	D06F 2058/2819
Detecting the air humidity by capacitance	D06F 2058/2822
Detecting the air humidity by resistance	D06F 2058/2825
Detecting the air temperature	D06F 2058/2829
Detecting the variation of quantities in the condenser	D06F 2058/2832
Detecting the laundry electrical capacitance	D06F 2058/2835
Detecting the laundry electrical resistance	D06F 2058/2838
Detecting the laundry temperature	D06F 2058/2841
by means of radiation;	D06F 2058/2845
Detecting the variation of the weight	D06F 2058/2848
Detecting the time for cooling-down or heating-up	D06F 2058/2851
Other automatic detection	D06F 2058/2854
Controlling the correct functioning of the machine	D06F 2058/2858
Detecting the load, e.g. weight or overload	D06F 2058/2861
Controlling the air quantity; mixing with fresh air	D06F 2058/2864

by ON/OFF timing	D06F 2058/2867
Controlling of the heat pump	D06F 2058/287
by ON/OFF timing	D06F 2058/2874
Controlling the driving motor	D06F 2058/2877
by ON/OFF timing;	D06F 2058/288
Displaying or monitoring the programme progress	D06F 2058/2883
Warning to signal incorrect functioning;	D06F 2058/2887
Controlling the heater;	D06F 2058/289
by ON/OFF timing;	D06F 2058/2893
Timing in general; e.g. timing of a part of the cycle	D06F 2058/2896

D06F 59/00

Supports adapted to retain the shape of particular articles being dried, e.g. incorporating heating means [N: (devices for retaining the shape of hats A42B 1/002; apparatus for changing the form and size of hats A42C 3/00)]

Definition statement

This subclass/group covers:

Illustrative example of subject matter classified in this group.

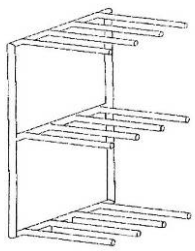

D06F 59/02

for garments

Definition statement

This subclass/group covers:

Illustrative example of subject matter classified in this group.

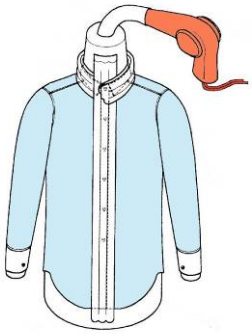

D06F 59/04

for gloves

Definition statement

This subclass/group covers:
Illustrative example of subject matter classified in this group.

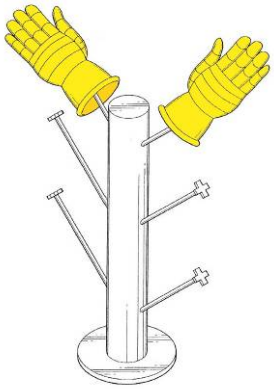

D06F 59/06

for stockings

Definition statement

This subclass/group covers:
Illustrative example of subject matter classified in this group.

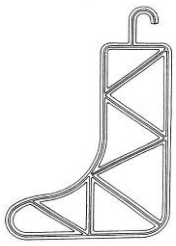

D06F 59/08

for curtains, table cloths, or other articles of sheet form

Definition statement

This subclass/group covers:
Illustrative example of subject matter classified in this group.

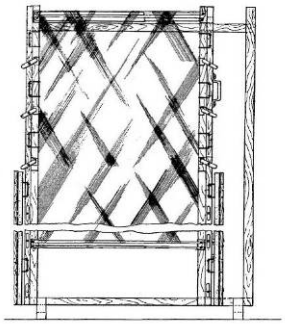

Informative references

Attention is drawn to the following places, which may be of interest for search:

Frames for embroidering	D05C 1/02, D05C 9/04, D05C 9/10
Quilt stretchers	**D05C39/00A**
Stretching frames	D06C 3/08
Stretching printing fabrics	B41F 15/36
Stretching devices for straining screens	B07B 1/48

D06F 60/00

Drying not provided for in groups D06F 53/00 to D06F 59/00

D06F 61/00

Ironing machines using two or more co-operating pressing rollers

Definition statement

This subclass/group covers:

Illustrative example of subject matter classified in this group.

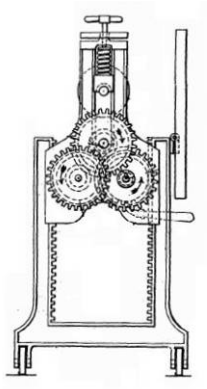

D06F 61/02

with two rollers

Definition statement

This subclass/group covers:

Illustrative example of subject matter classified in this group.

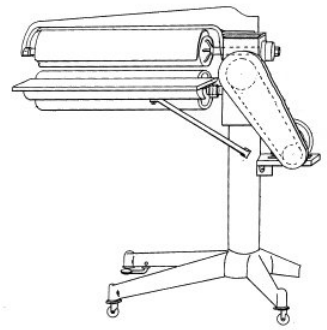

D06F 61/04

with three or more rollers one above the other

Definition statement

This subclass/group covers:

Illustrative example of subject matter classified in this group.

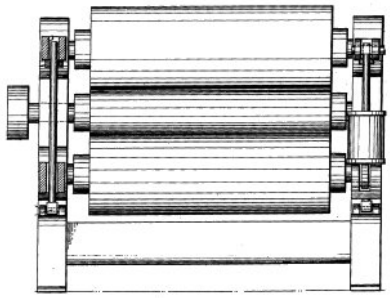

D06F 61/06

with successive pairs of rollers

Definition statement

This subclass/group covers:
Illustrative example of subject matter classified in this group.

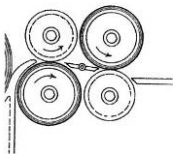

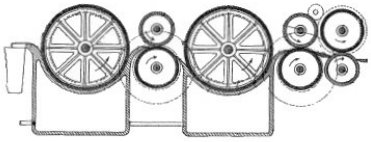

D06F 61/08

with one central roller co-operating with a plurality of circumferential rollers

Definition statement

This subclass/group covers:
Illustrative example of subject matter classified in this group.

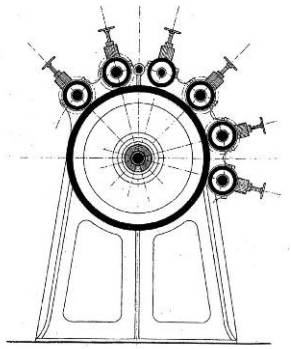

D06F 61/10

with two or more central rollers co-operating with a plurality of circumferential rollers

Definition statement

This subclass/group covers:

Illustrative example of subject matter classified in this group.

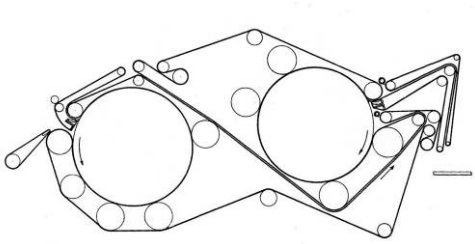

D06F 63/00

Ironing machines having a roller or rollers co-acting with a fixed or moving flat bed or table (coverings or pads D06F 83/00)

Definition statement

This subclass/group covers:

Illustrative example of subject matter classified in this group.

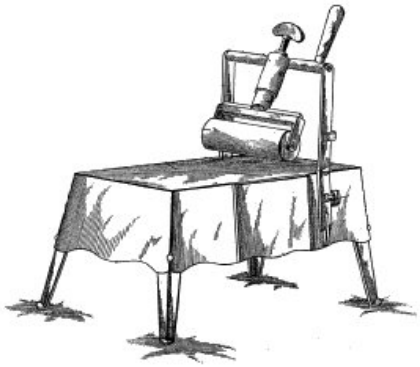

D06F 63/02

with two or more rollers co-acting with a fixed or moving flat bed or table

Definition statement

This subclass/group covers:
Illustrative example of subject matter classified in this group.

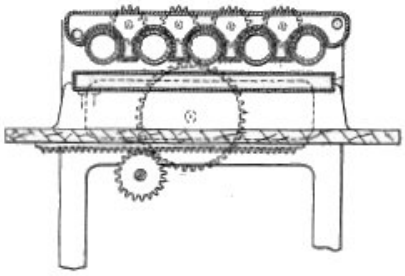

D06F 65/00

Ironing machines with rollers rotating against curved surfaces

Definition statement

This subclass/group covers:
Illustrative example of subject matter classified in this group.

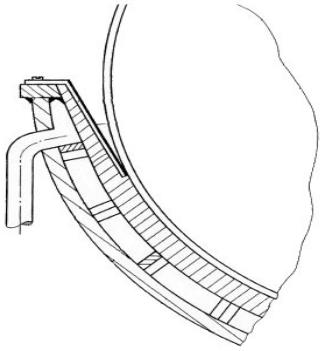

D06F 65/02

with one roller only

Definition statement

This subclass/group covers:
Illustrative example of subject matter classified in this group.

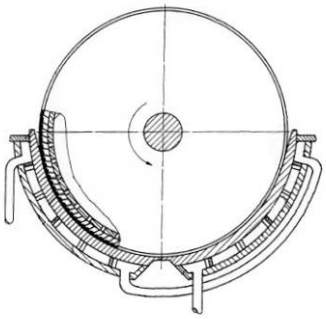

D06F 65/04

the bed being urged against the roller by hand or foot

Definition statement

This subclass/group covers:
Illustrative example of subject matter classified in this group.

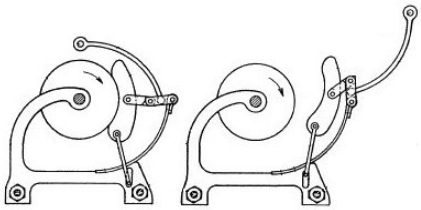

D06F 65/06

the bed being urged against the roller by power

Definition statement

This subclass/group covers:
Mechanical safety features.

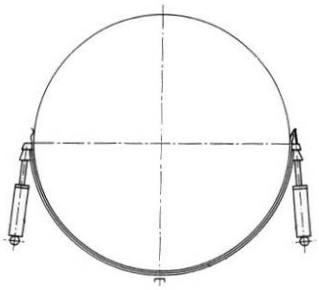

D06F 65/08

the roller being urged against the bed

Definition statement

This subclass/group covers:
Illustrative example of subject matter classified in this group.

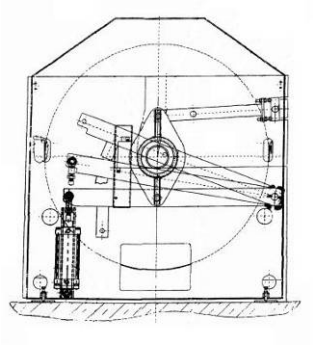

D06F 67/00

Details of ironing machines provided for in groups D06F 61/00, D06F 63/00, or D06F 65/00

Definition statement

This subclass/group covers:
Illustrative example of subject matter classified in this group.

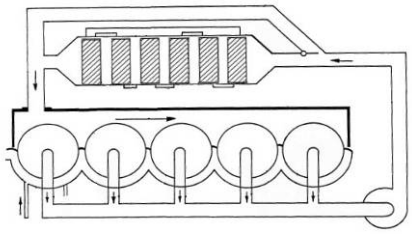

D06F 67/005

[N: Stands or cabinets]

Definition statement

This subclass/group covers:
Illustrative example of subject matter classified in this group.

D06F 67/02

Rollers; Heating arrangements therefor (coverings or pads D06F 83/00)

Definition statement

This subclass/group covers:
Illustrative example of subject matter classified in this group.

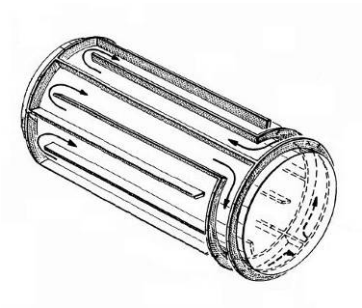

D06F 67/04

Arrangements for feeding or spreading the linen

Definition statement

This subclass/group covers:
Illustrative example of subject matter classified in this group.

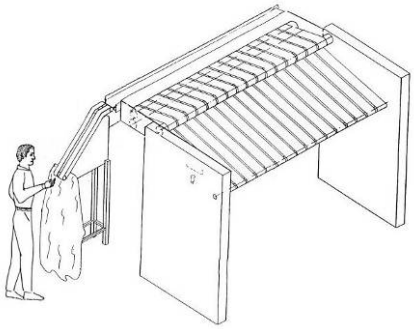

D06F 67/06

Means for stripping the linen from the rollers

Definition statement

This subclass/group covers:
Illustrative example of subject matter classified in this group.

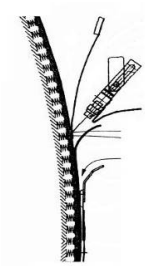

D06F 67/08

Beds; Heating arrangements therefor (coverings or pads D06F 83/00)

Definition statement

This subclass/group covers:
Illustrative example of subject matter classified in this group.

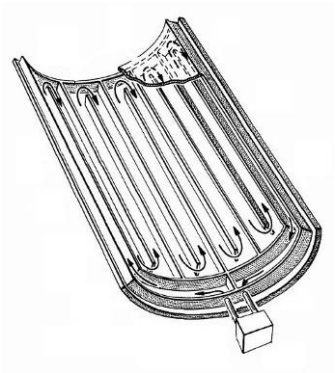

D06F 67/10

Driving arrangements

Definition statement

This subclass/group covers:
Illustrative example of subject matter classified in this group.

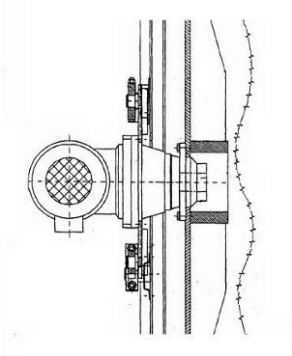

D06F 69/00

Ironing machines not otherwise provided for

Definition statement

This subclass/group covers:
Illustrative example of subject matter classified in this group.

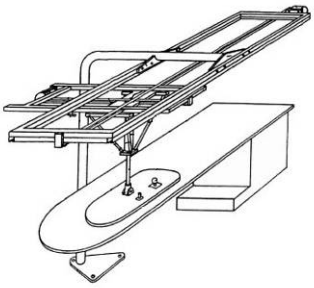

D06F 69/02

using endless or other ironing or pressing belts or aprons

Definition statement

This subclass/group covers:

Ironing machines comprising a moving endless belt pressed against a moveable roller.

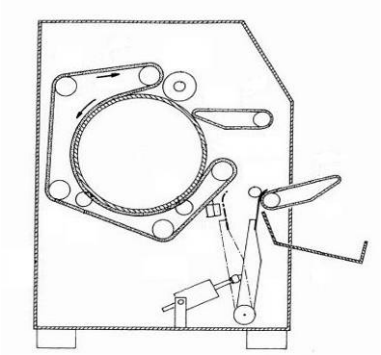

D06F 69/04

with relatively-sliding flat surfaces

Definition statement

This subclass/group covers:

Illustrative example of subject matter classified in this group.

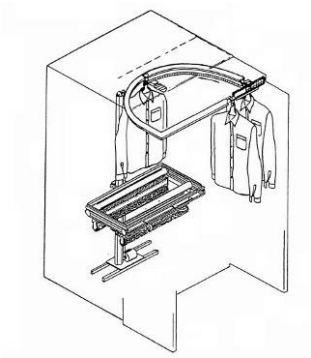

D06F 71/00

Apparatus for hot-pressing clothes, linen, or other textile articles, i.e. wherein there is substantially no relative movement between pressing element and article while pressure is being applied to the article; Similar machines for cold-pressing clothes, linen, or other textile articles (devices for household use, for cold-pressing garments A47G)

Definition statement

This subclass/group covers:

Illustrative example of subject matter classified in this group.

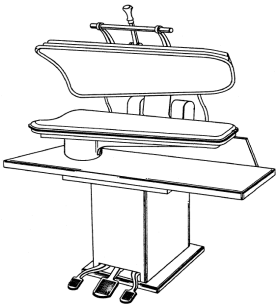

D06F 71/02

actuated wholly by hand or foot (D06F 71/08 takes precedence)

Definition statement

This subclass/group covers:

Illustrative example of subject matter classified in this group.

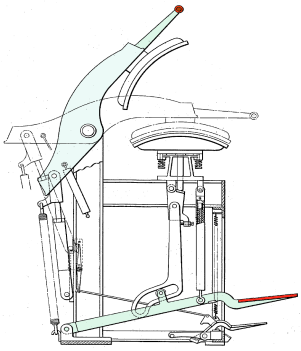

D06F 71/023

[N: with an upper movable pressing member and a lower fixed pressing member]

Definition statement

This subclass/group covers:
Illustrative example of subject matter classified in this group.

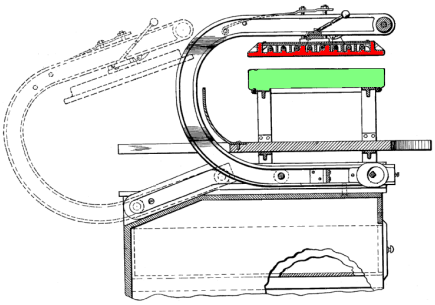

D06F 71/026

[N: the upper movable member rotating about a fixed axis]

Definition statement

This subclass/group covers:
Illustrative example of subject matter classified in this group.

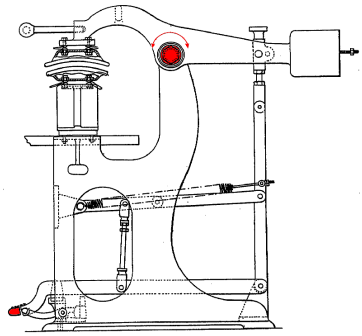

D06F 71/04

power-actuated (D06F 71/08 takes precedence)

Definition statement

This subclass/group covers:
Illustrative example of subject matter classified in this group.

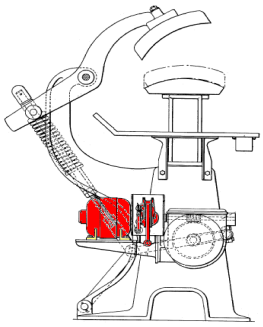

D06F 71/043

[N: with an upper movable pressing member and a lower fixed pressing member (D06F 71/06 takes precedence)]

Definition statement

This subclass/group covers:
Illustrative example of subject matter classified in this group.

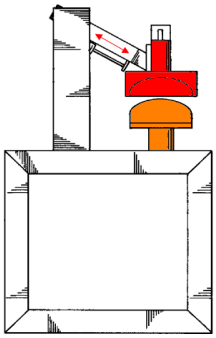

D06F 71/046

[N: the upper movable member rotating about a fixed axis]

Definition statement

This subclass/group covers:
Illustrative example of subject matter classified in this group.

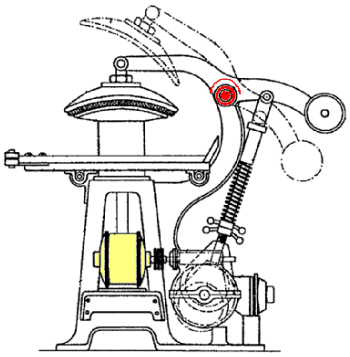

D06F 71/06

fluid-actuated

Definition statement

This subclass/group covers:

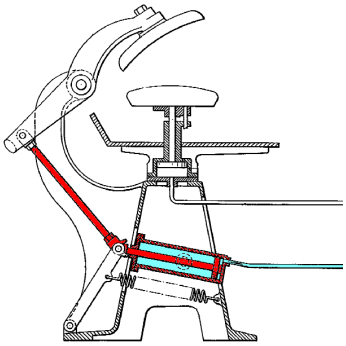

D06F 71/062

[N: with an upper movable pressing member and a lower fixed pressing member]

Definition statement

This subclass/group covers:
Illustrative example of subject matter classified in this group.

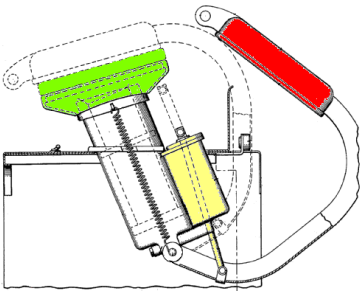

D06F 71/065

[N: the upper movable member rotating about a fixed axis]

Definition statement

This subclass/group covers:
Illustrative example of subject matter classified in this group.

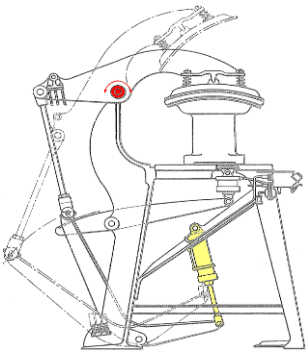

D06F 71/067

[N: Fluid-control mechanisms for controlling the ironing pressure or the movement of the pressure member]

Definition statement

This subclass/group covers:

Illustrative example of subject matter classified in this group.

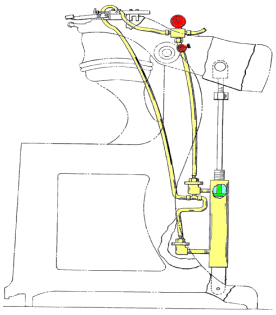

D06F 71/08

wherein one or more of the pressing elements is moved laterally between successive pressing operations (laundry systems or arrangements of apparatus or machines D06F 95/00)

Definition statement

This subclass/group covers:

Illustrative example of subject matter classified in this group.

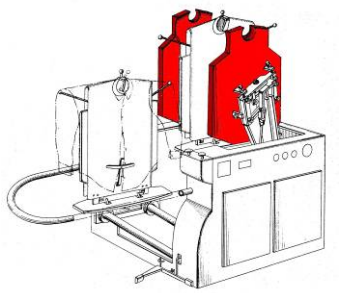

D06F 71/10

by movement about a vertical axis

Definition statement

This subclass/group covers:
Illustrative example of subject matter classified in this group.

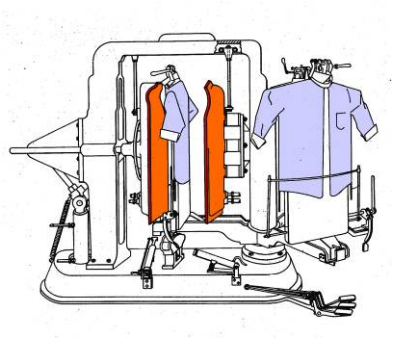

D06F 71/12

by movement about a horizontal axis

Definition statement

This subclass/group covers:
Illustrative example of subject matter classified in this group.

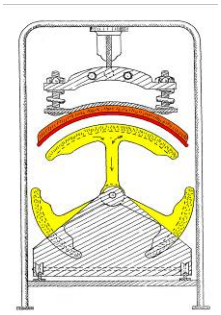

D06F 71/14

by a rectilinear movement

Definition statement

This subclass/group covers:
Illustrative example of subject matter classified in this group.

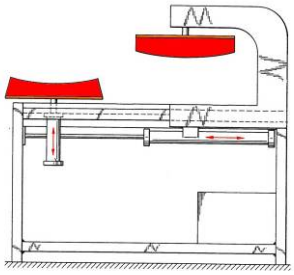

D06F 71/16

having a pressing element or buck adapted to provide interior support for a garment to be pressed (D06F 71/18 takes precedence)

Definition statement

This subclass/group covers:
Illustrative example of subject matter classified in this group.

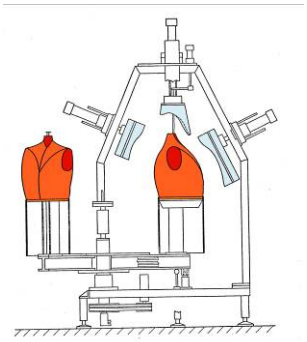

D06F 71/20

for pressing shirts

Definition statement

This subclass/group covers:
Illustrative example of subject matter classified in this group.

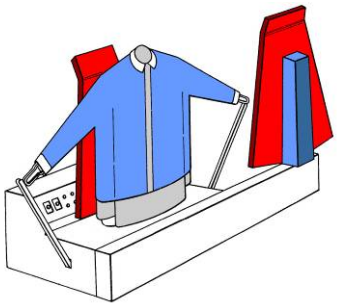

D06F 71/22

for pressing collars

Definition statement

This subclass/group covers:
Illustrative example of subject matter classified in this group.

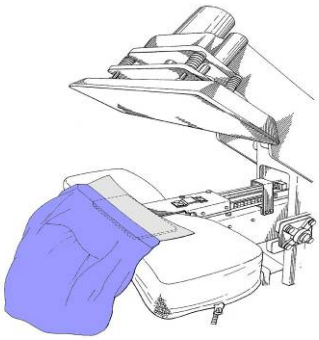

D06F 71/24

for pressing cuffs

Definition statement

This subclass/group covers:
Illustrative example of subject matter classified in this group.

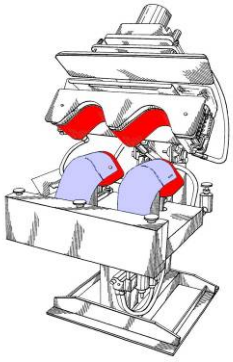

D06F 71/26

for pressing shoulders or necks

Definition statement

This subclass/group covers:
Illustrative example of subject matter classified in this group.

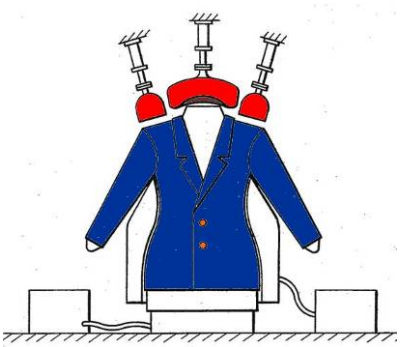

D06F 71/28

for pressing sleeves, trousers, or other tubular garments or tubular parts of garments

Definition statement

This subclass/group covers:
Illustrative example of subject matter classified in this group.

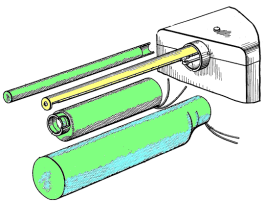

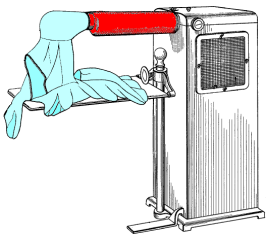

D06F 71/285

[N: for pressing sleeves]

Definition statement

This subclass/group covers:
Illustrative example of subject matter classified in this group.

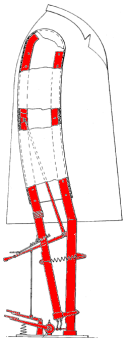

D06F 71/29

Trousers

Definition statement

This subclass/group covers:
Illustrative example of subject matter classified in this group.

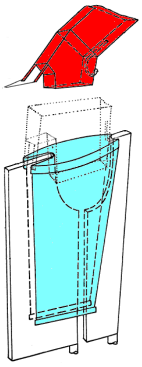

D06F 71/295

[N: the top portion of trousers]

Definition statement

This subclass/group covers:
Illustrative example of subject matter classified in this group.

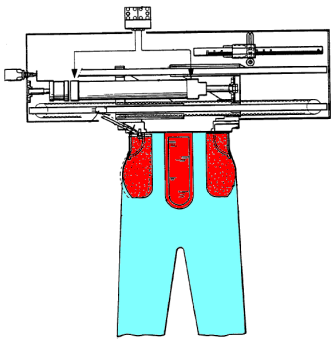

D06F 71/30

specially adapted for pressing seams

Definition statement

This subclass/group covers:
Illustrative example of subject matter classified in this group.

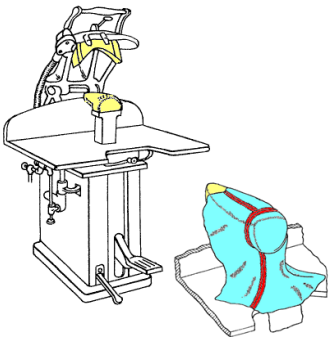

D06F 71/32

Details

Definition statement

This subclass/group covers:
Illustrative example of subject matter classified in this group.

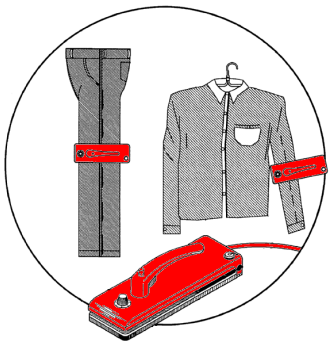

D06F 71/323

[N: Protective devices, e.g. burn guards]

Definition statement

This subclass/group covers:

Illustrative example of subject matter classified in this group.

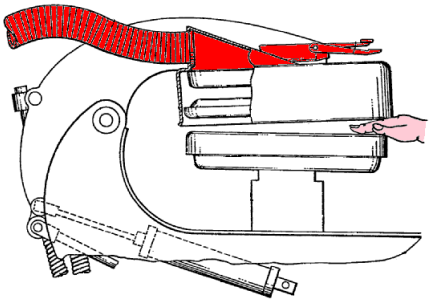

D06F 71/326

[N: Arrangements for producing a sliding or ironing movement between the pressing elements in closed position]

Definition statement

This subclass/group covers:

Illustrative example of subject matter classified in this group.

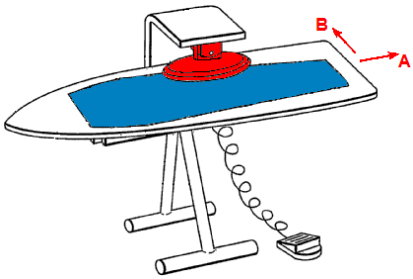

D06F 71/34

Heating arrangements; Arrangements for supplying or removing steam or other gases

Definition statement

This subclass/group covers:

Illustrative example of subject matter classified in this group.

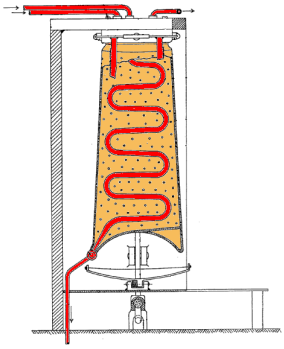

D06F 71/36

Pressing elements (for use in pressing particular garments or parts thereof D06F 71/18; coverings or pads therefor D06F 83/00)

Definition statement

This subclass/group covers:

Illustrative example of subject matter classified in this group.

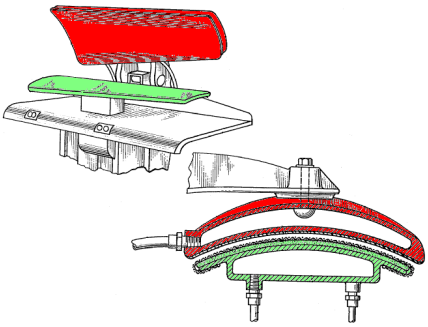

D06F 71/38

Feeding arrangements (feeding by lateral movement of pressing elements D06F 71/08)

Definition statement

This subclass/group covers:

Illustrative example of subject matter classified in this group.

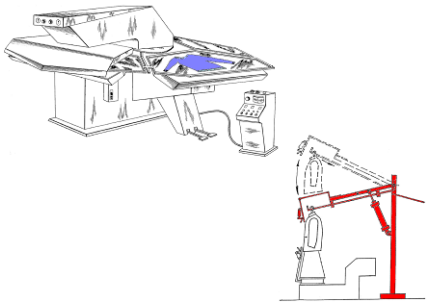

D06F 71/40

Holders or stretchers for the article to be pressed

Definition statement

This subclass/group covers:
Illustrative example of subject matter classified in this group.

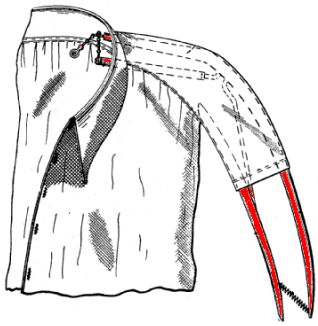

Informative references

Attention is drawn to the following places, which may be of interest for search:

Shaping or stretching of fabrics	D06C 5/00

D06F 73/00

Apparatus for smoothing or removing creases from garments or other textile articles by formers, cores, stretchers, or internal frames, with the application of heat or steam (stretchers for drying purposes D06F 59/00; combined with external pressure means D06F 71/00; stretchers for use with presses D06F 71/40; dress-forms for the tailoring trade A41H; garment stretchers without the application of heat A47G 25/00)

Definition statement

This subclass/group covers:
Illustrative example of subject matter classified in this group.

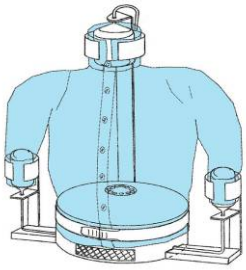

[media=media299., width=3.63cm, height=4.2cm]

Informative references

Attention is drawn to the following places, which may be of interest for search:

Garment bags	A47G 25/54

D06F 73/02

having one or more treatment chambers

Definition statement

This subclass/group covers:
Illustrative example of subject matter classified in this group.

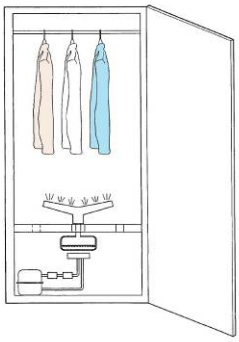

D06F 75/00

Hand irons

Definition statement

This subclass/group covers:

Illustrative example of subject matter classified in this group.

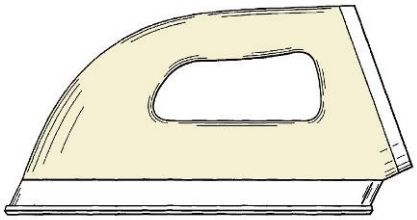

Informative references

Attention is drawn to the following places, which may be of interest for search:

Carpet irons	A47G 27/0443
Steam generators	F22B 1/28

D06F 75/02

Externally-heated hand irons; Hand irons internally heated by means other than electricity, e.g. by solid fuel, by steam

Definition statement

This subclass/group covers:

Illustrative example of subject matter classified in this group.

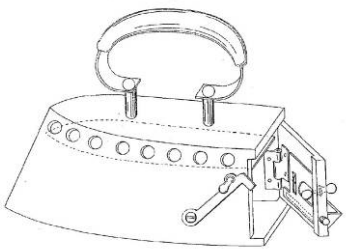

D06F 75/04

by pre-heated block

Definition statement

This subclass/group covers:

Illustrative example of subject matter classified in this group.

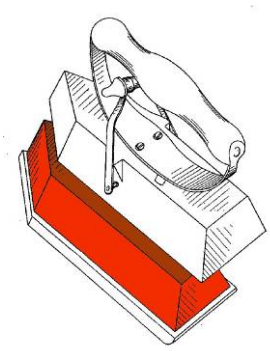

D06F 75/06

with means for supplying steam or liquid to the article being ironed (D06F 75/32 takes precedence)

Definition statement

This subclass/group covers:
Illustrative example of subject matter classified in this group.

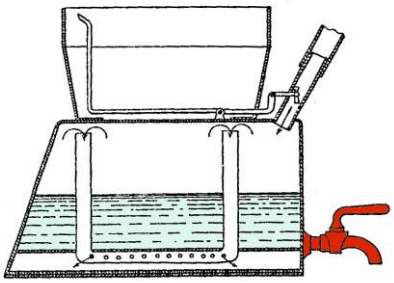

D06F 75/08

Hand irons internally heated by electricity

Definition statement

This subclass/group covers:
Illuminating devices.

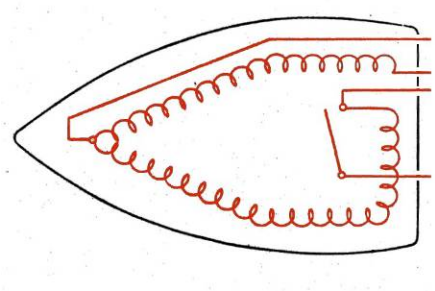

Special rules of classification within this group

Steam irons are not to be classified here.

D06F 75/10

with means for supplying steam to the article being ironed (D06F 75/32 takes precedence)

Definition statement

This subclass/group covers:

Illustrative example of subject matter classified in this group.

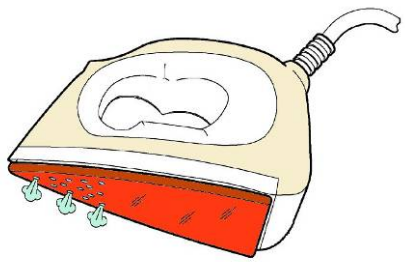

Informative references

Attention is drawn to the following places, which may be of interest for search:

Methods of steam generation, steam boilers	F22B

D06F 75/12

the steam being produced from water supplied to the iron from an external source

Definition statement

This subclass/group covers:

Hand irons having means for supplying steam, wherein steam or water for producing steam are supplied to the iron from an external source (e.g. an external steam generator or a water reservoir and pump).

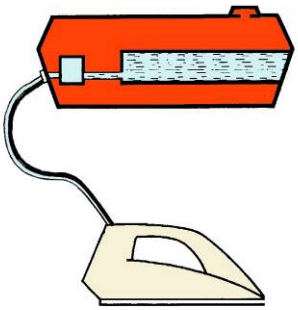

D06F 75/14

the steam being produced from water in a reservoir carried by the iron

Definition statement

This subclass/group covers:

Illustrative example of subject matter classified in this group.

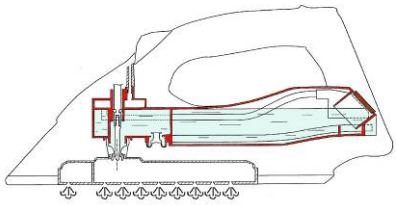

D06F 75/16

the reservoir being heated to produce the steam

Definition statement

This subclass/group covers:

Illustrative example of subject matter classified in this group.

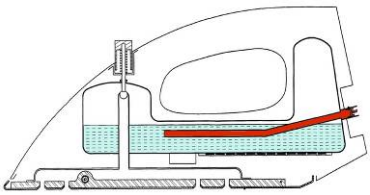

D06F 75/18

the water being fed slowly, e.g. drop by drop, from the reservoir to a steam generator

Definition statement

This subclass/group covers:

Illustrative example of subject matter classified in this group.

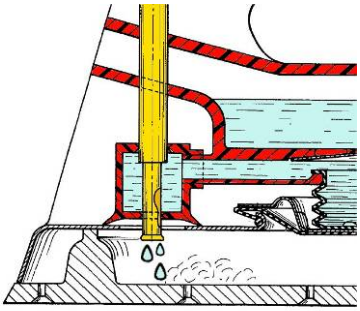

D06F 75/20

Arrangements for discharging the steam to the article being ironed

Definition statement

This subclass/group covers:

Steam outlets arrangements.

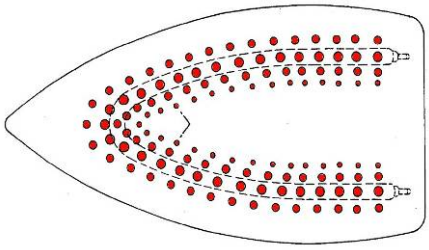

D06F 75/22

with means for supplying liquid to the article being ironed (D06F 75/10 takes precedence)

Definition statement

This subclass/group covers:

Hand irons comprising water sprays.

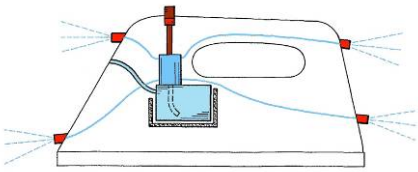

D06F 75/24

Arrangements of the heating means within the iron; Arrangements for distributing, conducting, or storing the heat (electric heating in general H05B)

Definition statement

This subclass/group covers:

Illustrative example of subject matter classified in this group.

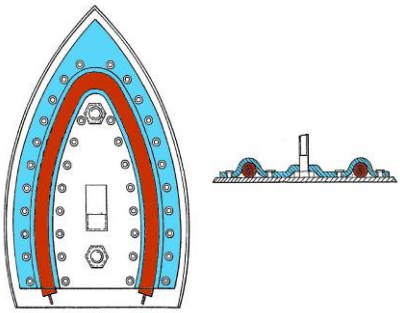

Informative references

Attention is drawn to the following places, which may be of interest for search:

Thermostats for home appliances	H05B 1/0255

D06F 75/243

[N: using other than ohmic-resistance heating means, e.g. electrolytic or induction heating]

Definition statement

This subclass/group covers:

Illustrative example of subject matter classified in this group.

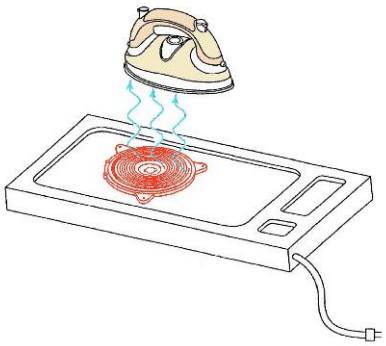

D06F 75/246

[N: using infra-red lamps]

Definition statement

This subclass/group covers:

- Heating means using sources of visible light;
- Heating means using sources of ultraviolet light.

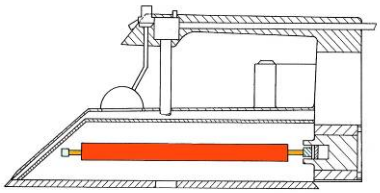

D06F 75/26

Temperature control or indicating arrangements (thermally-actuated switches H01H)

Definition statement

This subclass/group covers:

Hand irons comprising displays, buttons, position detectors and thermostats.

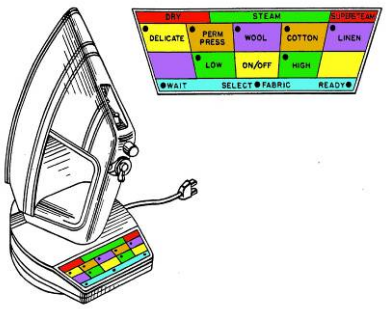

D06F 75/265

[N: Temperature indicating arrangements; Control knobs]

Definition statement

This subclass/group covers:
Illustrative example of subject matter classified in this group.

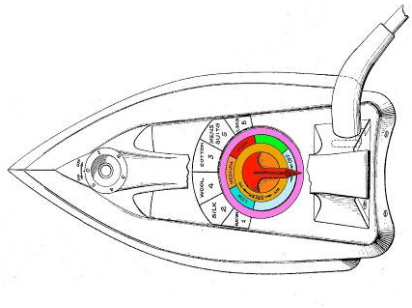

D06F 75/28

Arrangements for attaching, protecting or supporting the electric supply cable

Definition statement

This subclass/group covers:
Cable supports that are part of the hand iron.

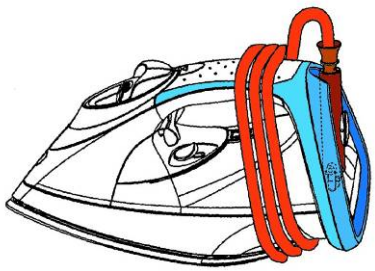

D06F 75/30

Hand irons of special external shape or form

Definition statement

This subclass/group covers:
Hand irons having a special shape or use.

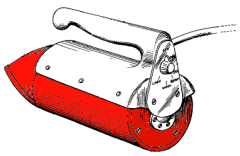

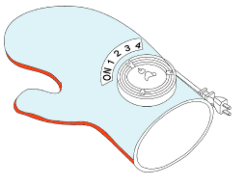

D06F 75/32

Attachments for converting hand irons to steam irons

Definition statement

This subclass/group covers:
Detachable brushes.

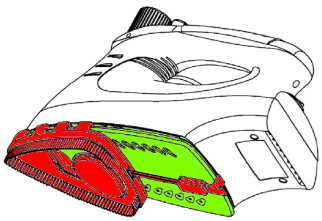

D06F 75/34

Handles; Handle mountings

Definition statement

This subclass/group covers:
Illustrative example of subject matter classified in this group.

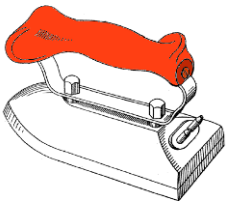

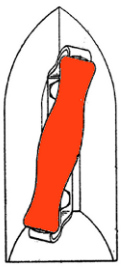

D06F 75/36

Casings

Definition statement

This subclass/group covers:

Illustrative example of subject matter classified in this group.

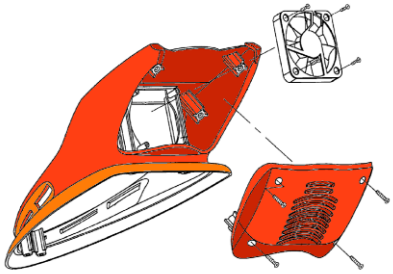

D06F 75/38

Sole plates (D06F 75/20 takes precedence)

Definition statement

This subclass/group covers:

Construction details of fixed or removable soleplates (how the soleplate is built e.g. layers, materials etc.).

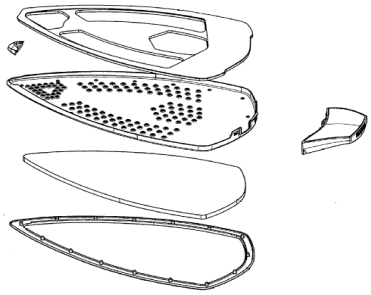

D06F 75/40

Stands or supports attached to the iron

Definition statement

This subclass/group covers:

Illustrative example of subject matter classified in this group.

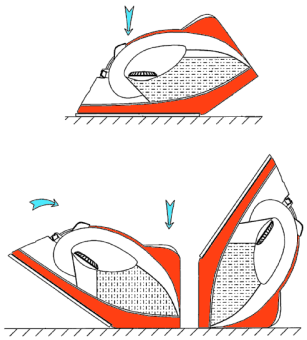

D06F 77/00

Arrangements for exerting pressure on, lifting, or guiding hand irons

Definition statement

This subclass/group covers:

Illustrative example of subject matter classified in this group.

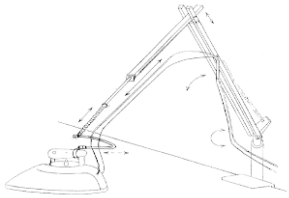

D06F 77/005

[N: using an electro-magnet or a permanent magnet in the iron or the ironing board]

Definition statement

This subclass/group covers:

Illustrative example of subject matter classified in this group.

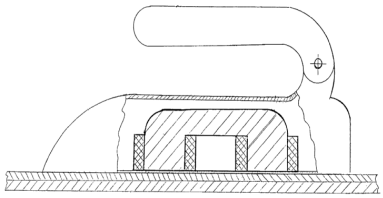

D06F 79/00

Accessories for hand irons

Definition statement

This subclass/group covers:
Water containers for filling the iron.

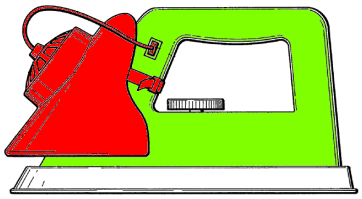

D06F 79/02

Stands or supports neither attached to, nor forming part of, the iron or ironing board

Definition statement

This subclass/group covers:
Illustrative example of subject matter classified in this group.

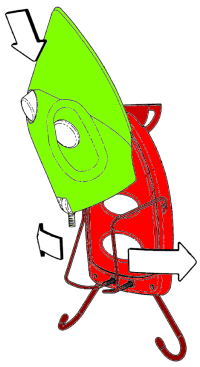

D06F 79/023

[N: with means for supplying current to the iron]

Definition statement

This subclass/group covers:
Illustrative example of subject matter classified in this group.

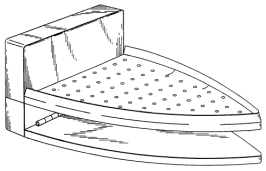

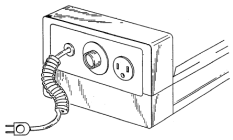

D06F 79/026

[N: for cordless irons]

Definition statement

This subclass/group covers:

Illustrative example of subject matter classified in this group.

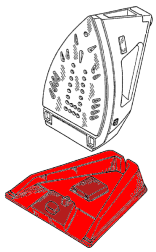

D06F 79/04

Stoves or other heating means specially adapted for heating irons externally [N: ,e.g. by induction heating] (stoves in general F24)

Definition statement

This subclass/group covers:

Illustrative example of subject matter classified in this group.

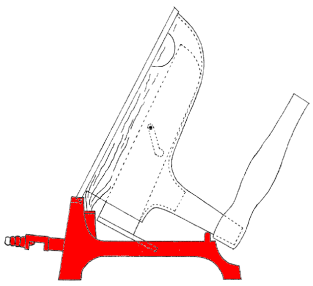

D06F 79/06

Means, not forming part of the iron, for cooling the iron

Definition statement

This subclass/group covers:

Illustrative example of subject matter classified in this group.

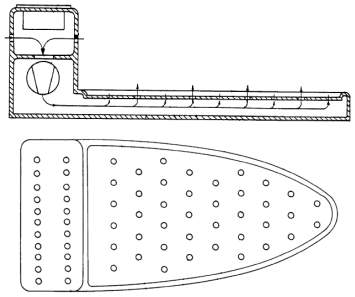

D06F 81/00

Ironing boards (coverings or pads therefor D06F 83/00; combined with tables, mounted in kitchen cabinets A47B; tables in general A47B; combined with ladders E06C; [N: supports for keeping the electric supply cable clear of the iron or of the clothing H02G 11/003])

Definition statement

This subclass/group covers:

Illustrative example of subject matter classified in this group.

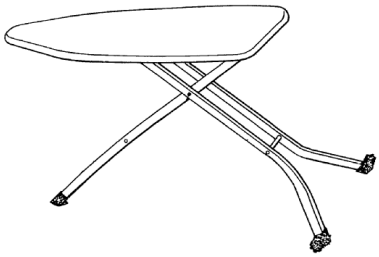

Informative references

Attention is drawn to the following places, which may be of interest for search:

Ironing boards stored in kitchen cabinets	A47B 77/10

D06F 81/003

[N: with flat iron support]

Definition statement

This subclass/group covers:
Illustrative example of subject matter classified in this group.

D06F 81/006

[N: with fabric support or garment rack]

Definition statement

This subclass/group covers:
Illustrative example of subject matter classified in this group.

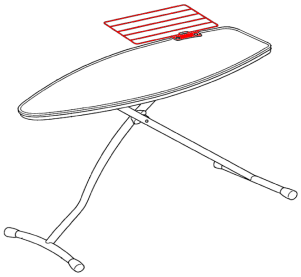

D06F 81/02

with collapsible underframe

Definition statement

This subclass/group covers:
Illustrative example of subject matter classified in this group.

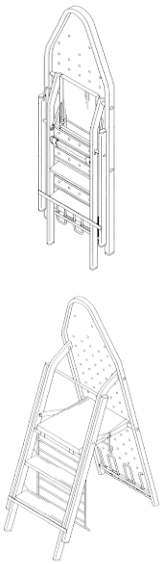

D06F 81/04

with means for adjusting height

Definition statement

This subclass/group covers:
Illustrative example of subject matter classified in this group.

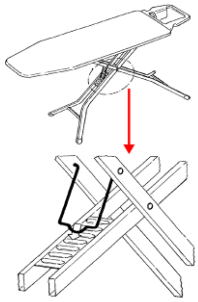

Informative references

Attention is drawn to the following places, which may be of interest for search:

Tables with means for varying the height of the top	A47B 9/16

D06F 81/06

attachable to independent supports, e.g. walls

Definition statement

This subclass/group covers:
Illustrative example of subject matter classified in this group.

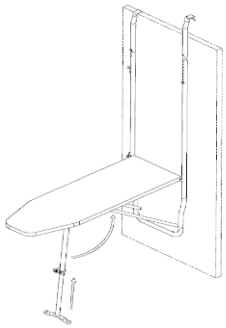

D06F 81/08

incorporating heating, steaming, or forced ventilation means

Definition statement

This subclass/group covers:
Ironing boards having steam suction means.

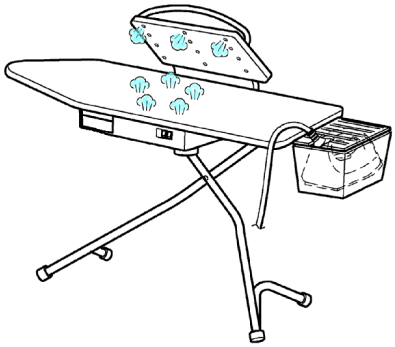

D06F 81/10

Top board elements

Definition statement

This subclass/group covers:
Illustrative example of subject matter classified in this group.

D06F 81/12

Sleeve boards; Attaching means therefor

Definition statement

This subclass/group covers:
Illustrative example of subject matter classified in this group.

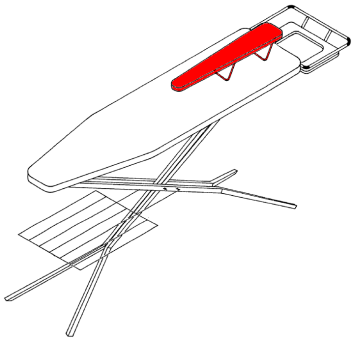

D06F 81/14

Means for attaching covers

Definition statement

This subclass/group covers:
Illustrative example of subject matter classified in this group.

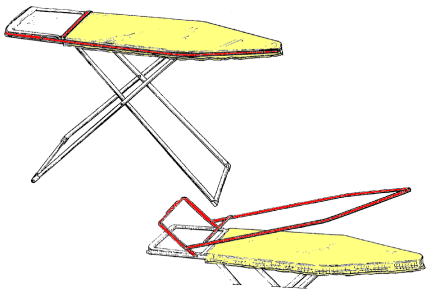

D06F 83/00

Coverings or pads for ironing or pressing members

Definition statement

This subclass/group covers:

Illustrative example of subject matter classified in this group.

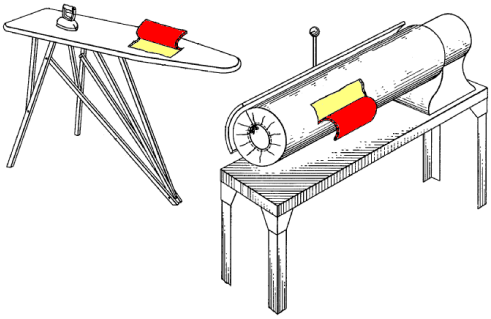

Informative references

Attention is drawn to the following places, which may be of interest for search:

Ironing machines using two or more co-operating pressing rollers	D06F 61/00
Ironing boards	D06F 81/00

D06F 85/00

Independent elements for interposition between the article and the ironing or pressing surface

Definition statement

This subclass/group covers:

Illustrative example of subject matter classified in this group.

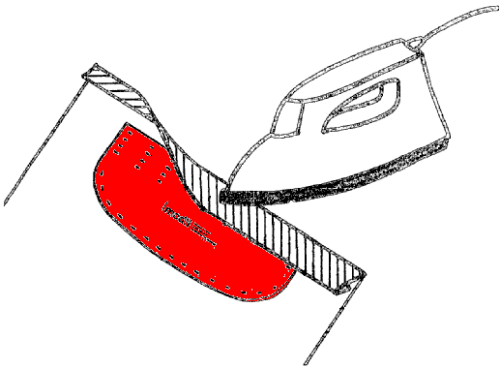

D06F 87/00

Apparatus for moistening or otherwise conditioning the article to be ironed or pressed (apparatus for smoothing or removing creases from garments or other textile articles by formers, cores, stretchers or internal frames, with the application of heat or steam D06F 73/00; [N: devices used in combination with a laundry drier D06F 58/203])

Definition statement

This subclass/group covers:

Steamers.

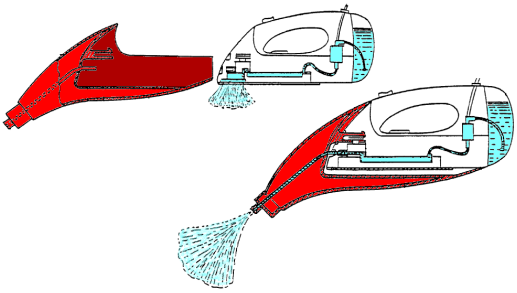

D06F 89/00

Apparatus for folding textile articles with or without stapling

Definition statement

This subclass/group covers:

Devices for creating temporary folds.

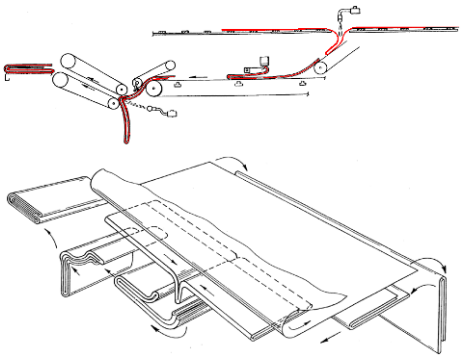

References relevant to classification in this group

This subclass/group does not cover:

Devices for creating permanent folds	A41H 43/00

Hand irons with means for supplying steam to the article being ironed	D06F 75/10

Glossary of terms

In this subclass/group, the following terms (or expressions) are used with the meaning indicated:

Seam	generally formed by two pieces of cloth stitched and/or glued together
Fold	generally formed by folding a piece of cloth onto itself, such that a folding line is formed

D06F 89/005

[N: Manual folding devices, e.g. for folding bed sheets (D06F 89/02 takes precedence)]

Definition statement

This subclass/group covers:

Illustrative example of subject matter classified in this group.

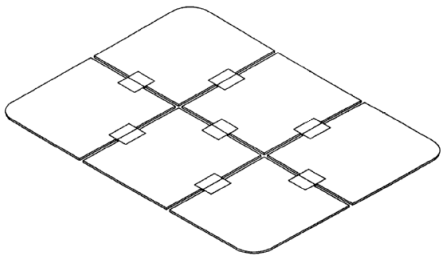

D06F 89/02

of textile articles to be worn, e.g. shirts

Definition statement

This subclass/group covers:

Illustrative example of subject matter classified in this group.

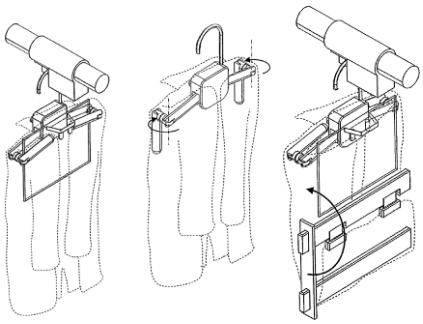

D06F 89/023

[N: of shirts]

Definition statement

This subclass/group covers:
Illustrative example of subject matter classified in this group.

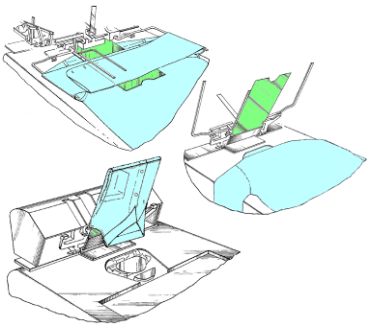

D06F 89/026

[N: Details, e.g. collar holders]

Definition statement

This subclass/group covers:
Illustrative example of subject matter classified in this group.

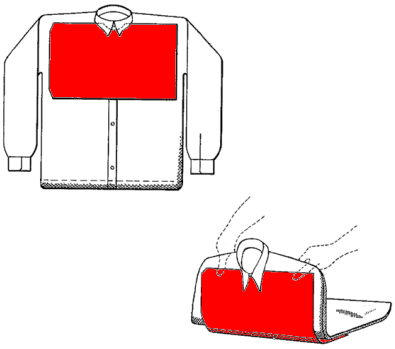

D06F 91/00

Starching apparatus

Definition statement

This subclass/group covers:
Illustrative example of subject matter classified in this group.

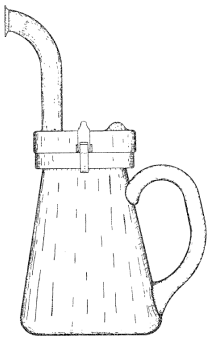

D06F 93/00

Counting, sorting, or marking arrangements specially adapted for laundry purposes.

Definition statement

This subclass/group covers:
Illustrative example of subject matter classified in this group.

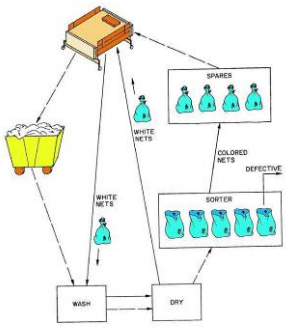

D06F 93/005

[N: Marking arrangements]

Definition statement

This subclass/group covers:
Marks as well as marking arrangements.

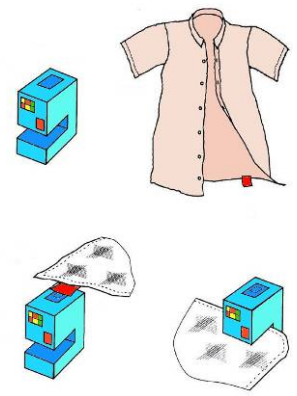

Informative references

Attention is drawn to the following places, which may be of interest for search:

Record carriers with integrated circuit chips	G06K 19/07

D06F 95/00

Laundry systems or arrangements of apparatus or machines; Mobile laundries (D06F 31/00 takes precedence; laundries as buildings E04H)

Definition statement

This subclass/group covers:

Illustrative example of subject matter classified in this group.

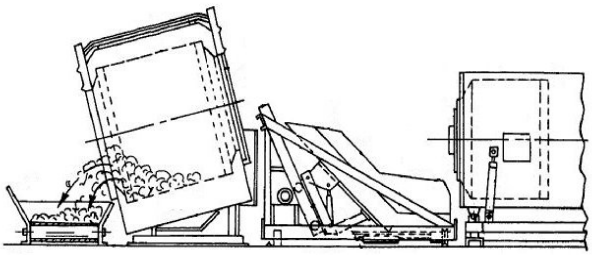

D06F 95/002

[N: Baskets or bags specially adapted for holding or transporting laundry; Supports therefor]

Definition statement

This subclass/group covers:

Illustrative example of subject matter classified in this group.

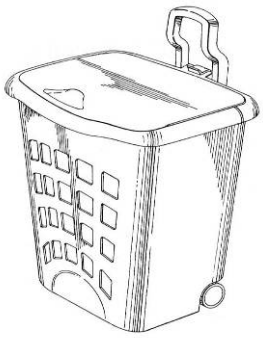

Informative references

Attention is drawn to the following places, which may be of interest for search:

Sack holders	B65B 67/12, B65B 67/1205

D06F 95/004

[N: Bags; Supports therefor]

Definition statement

This subclass/group covers:
Illustrative example of subject matter classified in this group.

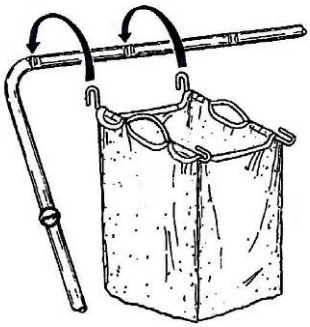

D06F 95/006

[N: Bags for holding the laundry during washing (D06F 5/005 takes precedence)]

Definition statement

This subclass/group covers:

Illustrative example of subject matter classified in this group.

D06F 95/008

[N: Devices for keeping articles together during laundering, e.g. for keeping socks in pairs (D06F 95/004 takes precedence); Devices for protecting or shielding certain parts of the articles during laundering, e.g. button protectors]

Definition statement

This subclass/group covers:

Illustrative example of subject matter classified in this group.

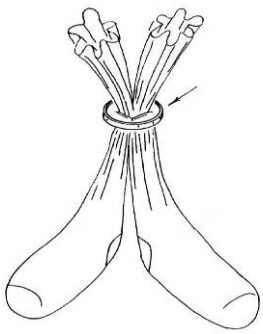

Informative references

Attention is drawn to the following places, which may be of interest for search:

Clothes pegs	D06F 55/00
Pairing socks	A41B 11/002
Friction grip fastenings / using pivoting jaws	F16B 2/10