CLASS 362, ILLUMINATION

SECTION I - CLASS DEFINITION

This class is the residual locus of means and processes for casting visible radiant energy in at least one direction to render objects in that direction visible.

BASIC SUBJECT MATTER OF THE CLASS

The basic subject matter of the class is comprised of:

A. The combination of a source of visible radiant energy and means to modify the distribution or composition of the radiant energy emanating from the source.

B. Methods utilizing the combination of A, above, to cast light in at least one direction to render objects in that direction visible.

SCOPE OF THE CLASS

In addition to the basic subject matter of the class, this class also provides for:

A. Subcombinations of the basic subject matter of the class not provided for elsewhere comprising:

1. means to modify the distribution of composition of light from sources other than the heavenly bodies;

2. means to support a source of visible radiant energy;

3. means to support the modifying means of item (1), above, and

4. combinations of (1), (2) and/or (3) above.

B. Combinations of the basic subject matter of the class and subject matter classified elsewhere insofar as the combination is not provided for elsewhere.

C. Accessories to the basic subject matter of the class limited in their intended use to the basic subject matter of the class.

(1) Note. Wherever drawings are associated with subclass definitions, they are used merely to illustrate the basic concept encompassed by the definition of that subclass and should not be construed as limiting the scope of the subject matter covered by that subclass.

SECTION II - LINES WITH OTHER CLASSES AND WITHIN THIS CLASS

A. LIGHT SOURCES, PER SE

Light sources, per se, are not classifiable in this class (362). For such devices, see References to Other Classes, below.

B. LIGHT MODIFIERS

Generally, light modifying means, per se, used merely to modify light from light sources other than a heavenly body are classifiable in this class (362). For exceptions listed in this class, see Subclass References to the Current Class, below.

Light modifying means not limited in use to illumination are not classifiable in this class. Two such modifying means may be found in References to Other Classes, below: (1) Filter, i.e., means to modify the composition of light, not limited in use to illumination. And (2) Reflectors, refractors, etc., i.e., means to modify the distribution of light, not limited in use to illumination.

C. LIGHT SOURCE SUPPORTS OR HOUSINGS

This class (362) provides for combinations of a support for a light source and significant structure of a light source and for a light source support having structural features limited to use with a light source. Housings for light sources having more than nominally recited light source supporting means or having or comprising light modifier means of this class type are also provided for in this class. For Light source housings, per se, and certain types of light source supports, see References to Other Classes, below.

D. SIGNALLING AND COMMUNICATION

Illuminating means, per se, which are used to convey information (e.g., "signal lanterns") are generally classified in this class (362) unless explicitly provided for elsewhere.

Means to convey information classifiable in another class combined with illuminating means is generally classified in the other class. Classes providing for such combinations may be found in References to Other Classes, below.

E. COMBINATIONS OF DEVICES PROVIDED FOR

IN OTHER CLASSES AND ILLUMINATING MEANS

Combinations of devices provided for in other classes and illuminating means are classified with the device unless specifically provided for in this class (362) whether or not the illuminating means illuminates the device itself. See the search notes of the combination subclasses of this class (362) for the lines between this class and other relevant classes.

Classes providing for combinations of devices of the respective class type and illuminating means may be found in References to Other Classes, below.

F. SPECIAL APPLICATIONS

In general, the proximate function of the basic subject matter of this class (362) is merely to direct visible radiation in at least one direction to render a reflective object in that direction visible to an observer in the path of the light reflected from the object.

Illuminating means used to perform functions provided for in other classes are classified in such classes. See References to Other Classes, for class references to subsection D, above, for classes providing for illuminating means used in signalling and communication. Additional classes also providing for illuminating means used in performing the function of the classes may be found in References to Other Classes, below.

SECTION III - SUBCLASS REFERENCES TO THE CURRENT CLASS

SEE OR SEARCH THIS CLASS, SUBCLASS:

257, see the search notes for exceptions to light modifying means found in this class (362).

SECTION IV - REFERENCES TO OTHER CLASSES

SEE OR SEARCH CLASS:

34, Drying and Gas or Vapor Contact With Solids, subclass 88 for drying apparatus and apparatus for contacting gases or vapors with solids which are provided with electric lamp illuminating means. (See Lines With Other Classes, "Combinations of Devices Provided for in Other Classes and Illuminating Means.")

40, Card, Picture, or Sign Exhibiting, particularly subclasses 480, 502 and 541+ for means for illuminating subject matter of this class. (See Lines With Other Classes, "Signalling and Communication.")

40, Card, Picture, or Sign Exhibiting, particularly subclasses 480, 502 and 541+ for illuminating means associated with the subject matter of the class (40). (See Lines With Other Classes, "Combinations of Devices Provided for in Other Classes and Illuminating Means.")

73, Measuring and Testing, subclass 293 for illuminated liquid level and depth gauges. (See Lines With Other Classes, "Combinations of Devices Provided for in Other Classes and Illuminating Means.")

84, Music, subclass 464 for musical instruments combined with means to produce color or light effects. (See Lines With Other Classes, "Combinations of Devices Provided for in Other Classes and Illuminating Means.")

114, Ships, subclass 66 for observation ships having means to illuminate the object or field to be observed. (See Lines With Other Classes, "Combinations of Devices Provided for in Other Classes and Illuminating Means.")

116, Signals and Indicators, subclass 3 for combinations of horns and lamps, subclasses 18+ for illuminated mechanical code signal apparatus. (See Lines With Other Classes, "Signalling and Communication.")

116, Signals and Indicators, subclass 7 for mechanical burglar alarms combined with illuminating (e.g., floodlighting) means; subclasses 18+ for illuminated mechanical code signal apparatus; subclasses 48, 49 and 54 for mechanical illuminated vehicle motion and direction indicators; and subclasses 241+ for illuminated radio tuning dials. (See Lines With Other Classes, "Combinations of Devices Provided for in Other Classes and Illuminating Means.")

126, Stoves and Furnaces, subclass 209 for a combined body warmer and illuminating means; subclasses 235 and 241 for tool heaters with illuminating means; subclasses 255+ for lamp heaters; and subclass 267 for a combined lunch bucket heater and illuminating means. (See Lines With Other Classes, "Combinations of Devices Provided for in Other Classes and Illuminating Means.")

128, Surgery, for illuminating means for treating the human body with light rays. (See Lines With Other Classes, "Special Applications.")

165, Heat Exchange, for patents claiming heat exchange apparatus combined with a device to be heated or cooled thereby if no structure of said device is included other than the structure necessary for cooperation with the heat exchange apparatus. The mere naming of the device as a lamp, light fixture, etc., will not be sufficient to exclude the patent from Class 165. (See Lines With Other Classes, "Combinations of Devices Provided for in Other Classes and Illuminating Means.")

219, Electric Heating, subclass 553 for heating devices wherein the heating elements are ordinary incandescent lamps. (See Lines With Other Classes, "Special Applications.")

220, Receptacles, for housings, per se, for light sources including such housings having nominally recited light source supporting means. (See Lines With Other Classes, "Light Source Supports or Housings.")

232, Deposit and Collection Receptacles, subclass 13 for illuminated fare boxes. (See Lines With Other Classes, "Combinations of Devices Provided for in Other Classes and Illuminating Means.")

239, Fluid Sprinkling, Spraying, and Diffusing, appropriate subclasses for a fluid fuel distributor which may be disclosed as an illuminating burner. (See Lines With Other Classes, "Light Sources, Per Se.")

239, Fluid Sprinkling, Spraying, and Diffusing, subclasses 18+ for ornamental illuminated fountains. (See Lines With Other Classes, "Combinations of Devices Provided for in Other Classes and Illuminating Means.")

246, Railway Switches and Signals, subclass 473 for illuminated railway signals. (See Lines With Other Classes, "Signalling and Communication.")

246, Railway Switches and Signals, subclass 483 for illuminated semaphore arms. (See Lines With Other Classes, "Combinations of Devices Provided for in Other Classes and Illuminating Means.")

248, Supports, appropriate subclasses for supports which may support, but are not limited to the support of light sources. See also the notes to the definition of subclass 382, below. (See Lines With Other Classes, "Light Source Supports or Housings.")

250, Radiant Energy, subclasses 462.1+ for self-luminous articles. (See Lines With Other Classes, "Light Sources, Per Se.")

250, Radiant Energy, subclasses 200+ for illuminating means combined with photocells. (See Lines With Other Classes, "Combinations of Devices Provided for in Other Classes and Illuminating Means.")

294, Handling: Hand and Hoist-line Implements, subclass 1.2 for a contact lens applicator combined with illuminating means and subclass 66.2 for illuminating means combined with underwater handling equipment. (See Lines With Other Classes, "Combinations of Devices Provided for in Other Classes and Illuminating Means.")

313, Electric Lamp and Discharge Devices, generally, for electric light sources, per se, of the nonconsumable electrode type. See Lines With Other Classes, "Combined With a Support, Combined With a Temperature Modifying Means" (subsection 1), "Combined With a Separable Casing, Jacket, Shield, or Envelope Protective Means," and "Combined With Optical Device or Having a Special Ray Transparent Envelope," in the class definition of Class 313 for the lines between Class 313 and this class (362). (See Lines With Other Classes, "Light Sources, Per Se.")

314, Electric Lamp and Discharge Devices: Consumable Electrodes, for consumable carbon arc-type light sources, per se. (See Lines With Other Classes, "Light Sources, Per Se.")

315, Electric Lamp and Discharge Devices: Systems, for an electric light source and circuitry for energizing the light source where the source of power (battery or generator) is not recited as an integral part of the claimed combination. (See Lines With Other Classes, "Light Sources, Per Se.")

340, Communications: Electrical, appropriate subclasses for claimed combinations whose proximate function is to convey information by means of electrically generated visible light. Such combinations must necessarily include a light source or light source and modifier and some (encoding) means which establishes a correspondence between the distribution, composition or location of the light and some other fact to be communicated. This requirement is based on the premise that, in signalling with visible light, the light itself is merely the carrier of or medium for the transfer of information and not the information itself. If the proximate function of the claimed combination is to convey information and illuminate or to convey information or illuminate, the combination is

classifiable in this class (362). Subcombinations of subject matter of this class (362), for example, a light source and modifier which can be used for signalling (e.g., "signal lantern") or is used for signalling in nonclaimed disclosure, are classified in this class (362), unless explicitly provided for in Class 340. However, N.B., Class 340 has not been screened for such subcombinations which may have been originally classified there in the past. (See Lines With Other Classes, "Signalling and Communication.")

340, Communications: Electrical, subclasses 907+ for illuminating means combined with means to convey information. See also subsection D, above. (See Lines With Other Classes, "Combinations of Devices Provided for in Other Classes and Illuminating Means.")

352, Optics: Motion Pictures, subclasses 198+ for illuminating means used to project motion pictures. (See Lines With Other Classes, "Special Applications.")

353, Optics: Image Projectors, for illuminating means used to project images. (See Lines With Other Classes, "Special Applications.")

356, Optics: Measuring and Testing, subclass 46 for incandescent materials used in the testing of visible light or materials for optical properties; and subclasses 331+ for monochromators of the visible type. (See Lines With Other Classes, "Special Applications.")

359, Optical: Systems and Elements, subclass 885 for optical filters, subclasses 483-502 for polarizers. (See Lines With Other Classes, "Light Modifiers, Filter.").

359, Optics: Systems and Elements, generally, for light modifiers which modify light from an illuminated object or field rather than directly from a light generating means. See subclass 515 for signal reflectors which may modify the distribution of (reflect) light directly from a light generating means; especially subclass 527 for a signal reflector for a signal source remote from the observer; subclass 528 for a signal reflector for a source behind the reflector; subclasses 642-830 for lenses. (See Lines With Other Classes, "Light Modifiers, Reflectors, Refractors, etc.").

368, Horology: Time Measuring Systems or Devices, subclasses 67 and 227 for illuminated clocks.

369, Dynamic Information Storage or Retrieval, subclasses 100+ for apparatus and systems including illuminating means for electrically recording or reproducing photographic sound records. (See Lines With Other Classes, "Special Applications.")

372, Coherent Light Generators, appropriate subclasses for laser-type light sources, per se. (See Lines With Other Classes, "Light Sources, Per Se.")

374, Thermal Measuring and Testing, subclasses 100+ for detailed structures of thermometers.

374, Thermal Measuring and Testing, subclasses 100+ for the detailed structure of thermometers. (See Lines With Other Classes, "Combinations of Devices Provided for in Other Classes and Illuminating Means.")

385, Optical Waveguides, appropriate subclasses for light transmitting fibers, rods, or pipes. (See Lines With Other Classes, "Light Modifiers, Reflectors, refractors, etc.")

398, Optical Communications, various subclasses for light wave communications. (See Lines With Other Classes, "Signaling and Communication.")

399, Electrophotography, for illumination systems including light sources used in electrophotographic devices, specifically subclasses 9+ for diagnostics, subclasses 38+ for controls, subclasses 130+ for image formation, subclasses 168+ for charging, subclasses 177+ for exposure, subclasses 222+ for development, subclasses 297+ for transfer, subclasses 320+ for fixing, subclasses 343+ for cleaning, and subclasses 361+ for document handling. (See Lines With Other Classes, "Light Sources, Per Se.")

416, Fluid Reaction Surfaces (i.e., Impellers), subclass 5 for impellers combined with illuminating means. (See Lines With Other Classes, "Combinations of Devices Provided for in Other Classes and Illuminating Means.")

428, Stock Material or Miscellaneous Articles, subclass 38 for a mass transmissive of light through all layers and having an opaque border; subclass 415 for a stock material product in the form of a nonstructural laminate of glass or quartz next to epoxy; subclasses 426+ for a stock material product in the form of a nonstructural laminate embodying one or more layers of glass or quartz; and subclass 918 (a cross reference art collection) for a material abnormally transparent. (See Lines With Other Classes, "Light Modifiers, Filter.")

431, Combustion, for flame-type light sources, per se, especially subclasses 100+ for a mantle type illuminating burner; subclasses 288+ for a

candle; and subclasses 298+ for a wick-type liquid fuel burner. (See Lines With Other Classes, "Light Sources, per se.")

433, Dentistry, subclasses 29+ for illuminated or illuminating dental apparatus. (See Lines With Other Classes, "Combinations of Devices Provided for in Other Classes and Illuminating Means.")

439, Electrical Connectors, appropriate subclasses for an electrical connector, per se, such as a light bulb or tube socket which may also support or contribute to the support of the light bulb or tube. See also the notes to the definition of subclass 382, below. (See Lines With Other Classes, "Light Source Supports or Housings.")

441, Buoys, Rafts, and Aquatic Devices, subclasses 13+ for illumination buoys. (See Lines With Other Classes, "Combinations of Devices Provided for in Other Classes and Illuminating Means.")

446, Amusement Devices: Toys, subclass 47, 91, 242, and 485+ for illuminated toys. (See Lines With Other Classes, "Combinations of Devices Provided for in Other Classes and Illuminating Means.")

454, Ventilation, for illuminating means combined with means to ventilate an enclosed space other than, or in addition to, a light source or light source enclosure, particularly subclasses 293+ for a ceiling diffuser with a light fixture. (See Lines With Other Classes, "Combinations of Devices Provided for in Other Classes and Illuminating Means.")

463, Amusement Devices: Games, subclasses 51+ for a simulated projectile game wherein a light ray is used to simulate a projectile. (See Lines With Other Classes, "Special Applications.")

472, Amusement Devices, subclasses 57+ and particularly subclass 61 for illusion apparatus with illuminating means appropriate therefor. (See Lines With Other Classes, "Special Applications.")

501, Compositions: Ceramic, subclasses 11+ for glass compositions which may act as a light filter. (See Lines With Other Classes, "Light Modifiers, Filter.")

600, Surgery, appropriate subclasses for illuminated diagnostic apparatus and for apparatus for treating the human body with light rays. In particular, search subclasses 101+ for endoscopes; subclass 11 for pharygoscopes; subclasses 185+ for nonpivoted gags; subclasses 184+ for tongue depressors; subclass 241 for pivoted specula; subclass 200 for reflectors with lamps; subclass 249 for miscellaneous illuminated diagnostic apparatus not otherwise classified; subclass 200.11 for medicating apparatus. (See Lines With Other Classes, "Combinations of Devices Provided for in Other Classes and Illuminating Means.")

601, Surgery: Kinesitherapy, subclass 1 for kinesitherapy devices. (See Lines With Other Classes, "Combinations of Devices Provided for in Other Classes and Illuminating Means.")

602, Surgery: Splint, Brace, or Bandage, subclass 2 for orthopedic devices including light, heat, or electrical applicators. (See Lines With Other Classes, "Combinations of Devices Provided for in Other Classes and Illuminating Means.")

604, Surgery, subclasses 20+ for electrical energy applied to the body for therapeutic purposes. (See Lines With Other Classes, "Combinations of Devices Provided for in Other Classes and Illuminating Means.")

606, Surgery, subclass 1 for surgical instrumentation. (See Lines With Other Classes, "Combinations of Devices Provided for in Other Classes and Illuminating Means.")

SECTION V - GLOSSARY

The following definitions of terms occurring frequently in the titles and definitions of this class are intended only to be used as aids in determining placement of subject matter within this class and do not necessarily encompass all usages of the terms in the art. Because the following definitions are generalized, certain subclass definitions may include definitions of the listed terms which deviate somewhat from the definitions given below. In such cases, the subclass definition is controlling. The use of ambiguous or equivocal art terms in the titles and definitions of this class has been avoided wherever possible. For the interpretation of such terms for classification purposes, see the notes to the definitions of "Modifier".

FILTER

A type of transparent or translucent selected wavelength modifier which absorbs light of at least one wavelength (i.e., color) and transmits light of another wavelength.

ILLUMINATING MEANS

Basic subject matter of the class or subcombinations thereof.

LIGHT SOURCE

An element (e.g., filament) or material (e.g., neon) which converts energy into visible radiant energy and/or the essential container of such an element or material, i.e., a light source envelope including the envelope base (e.g., light bulb, fluorescent tube). Unless otherwise specified a light source is assumed to be a point source. For purposes of classification within this class, nominal recitations such as "light unit", "lamp", "headlight", etc., are assumed to denote only a light source.

MODIFIER

A recited element or combination of elements whose proximate function in the claimed combination is, according to the claim or the claimed disclosure, to alter the distribution or composition of light emitted from a light source by reflecting, refracting, or partially or completely absorbing the light.

(1) Note. Certain terms such as "lens," "shield," "screen," etc., are used in the art in some instances to denote modifiers and in other instances to denote structure whose proximate function is other than to modify light. For example, the term "lens" is used in some instances to denote means whose proximate function is to refract light and in other instances to denote merely a transparent window in a light housing whose proximate function is to protect the light source. Whether or not a means recited in a claim in such ambiguous terms is to be considered a modifier for placement within this class must be determined by the proximate function (according to the claim or the claimed disclosure) of the means in the claimed combination.

(2) Note. Certain terms such as "shade," "bowl," etc., are used in the art in some instances to denote recited modifiers which, according to the claim or claimed disclosure, function to modify light in two or more ways provided for separately in this class. A recited "bowl," for example, may, according to the claim or claimed disclosure, function in the claimed combination to diffuse light by internal scattering within the material of which the bowl is made (viz., translucent bowls) and reflect light from one of its surfaces. Such a modifier is classifiable in the first-occurring subclass providing for modifiers which perform at least one of its modifying functions.

REFLECTOR

A light modifying device having a surface which redirects incident light back into the medium from which it came. Reflectors are more commonly opaque but may be transparent. Light incident on the redirecting surface of a transparent reflector may arrive from the transparent material of the reflector itself in which case it is redirected back into the transparent material of the reflector, or it may arrive at the redirecting surface from some other material (e.g., air) in which case it is redirected back into the other material. Whether a recited transparent modifier is a reflector or some other type of modifier or both depends, for purposes of classification within this class, on its proximate function according to the claim or claimed disclosure.

REFRACTOR

A light modifier whose proximate function is to redirect light comprising a light previous material having a pair of opposed surfaces at least one of which is, at least in part, so angularly related to the other surface that the path of a light ray incident on one opposed surface of the material and the path of the same ray after it emerges from the material through the other opposed surface are not parallel. A nominally recited "lens" is considered a refractor for purposes of classification within this class only if the structural and functional characteristics of a refractor can be imputed to it from the claim or claimed disclosure. (See (1) Note to the definition of "Modifier", above).

SELECTED WAVELENGTH MODIFIER

A type of modifier which modifies light of at least one wavelength (color) differently from light of another wavelength. Such modifiers may reflect, refract or filter light.

TRANSLUCENT

Having the property of certain light previous materials which results in the random internal scattering of light rays passing through the material.

TRANSPARENT

Having the property of certain light previous materials which permits light rays to pass through the material in

straight lines. Transparent illuminating means may or may not be light modifiers.

SUBCLASSES

1 This subclass is indented under the class definition. Subject matter having means for modifying the spectral character of light from an artificial source for the purpose of producing light simulating daylight.

(1) Note. This subclass includes a combination of light sources of differing spectral outputs with means for mixing the outputs for a combined spectral output simulating daylight.

SEE OR SEARCH THIS CLASS, SUBCLASS:

231, for plural light sources with different radiation outputs but not limited to simulated daylight.

SEE OR SEARCH CLASS:

313, Electric Lamp and Discharge Devices, subclasses 110+ for optical device or special ray transmissive envelope, per se.

607, Surgery: Light, Thermal, and Electrical Application, subclass 95 for a cabinet to enclose a person and designed to expose the person to the sun's rays; and subclasses 88+ for devices to apply light to the body for therapeutic purposes.

2 This subclass is indented under subclass 1. Subject matter wherein the means for modifying the light has different effects on different light wavelengths such as absorbing some while transmitting others or reflecting others.

SEE OR SEARCH THIS CLASS, SUBCLASS:

293, for an illumination light source or support combined with a selected wavelength modifier but not limited to simulating daylight.

SEE OR SEARCH CLASS:

359, Optics: Systems (Including Communication) and Elements, subclasses 885+ for light filters, per se.

3 This subclass is indented under the class definition. Subject matter comprising means to illuminate a subject and designed for use with a device (camera) for recording an image of the subject on photosensitive material and not classifiable elsewhere.

(1) Note. This and the indented subclasses include subcombinations adapted to perfect the illumination function such as a "flashgun" designed to give a short burst of high intensity light when used with an unclaimed shutter actuator.

SEE OR SEARCH THIS CLASS, SUBCLASS:

257+, for light projectors of general illumination utility including "photo flood lights" which fail to require structural features that would limit them to a photographic environment.

SEE OR SEARCH CLASS:

174, Electricity: Conductors and Insulators, subclasses 250+ for a printed circuit board, per se.

219, Electric Heating, subclasses 260+ for resistive element igniters.

313, Electric Lamp and Discharge Devices, appropriate subclasses for photoflash bulbs, per se, of the nonconsumable type.

315, Electric Lamp and Discharge Devices: Systems, appropriate subclasses for systems including circuit means for energizing light sources of the nonconsumable type.

361, Electricity: Electrical Systems and Devices, subclasses 243+ for electrical systems for igniting combustible flashbulbs of general utility and wherein the flashbulbs are not limited by specific structure. See the reference to Class 431 below.

396, Photography, subclasses 155+ for combinations of photographic lights and significant camera structure which may include photoelectric means.

399, Electrophotography, for illumination systems including light sources used

in electrophotographic devices, specifically subclasses 177+ for exposure.

431, Combustion, subclasses 357+ for photoflash bulbs, per se, of the combustible type and combinations which include means for igniting such specific bulbs. That section also provides for a nominal light source, such as a "flashbulb", or a nominal light modifier or "reflector" if combined with specific mechanical igniting means, such as percussive means and which may include light source support means. See the reference to Class 361 above which provides for more general utility electrical ignition means that are not limited by light source, modifier or support details.

439, Electrical Connectors, subclass 151 for a coupling part connector combined with means to allow repositioning of a mating part for engagement of different contacts on the mating part (e.g., a flash cube); and subclasses 620+ for an electrical connector combined with a named circuit component; and see the notes appended thereto.

4 This subclass is indented under subclass 3. Subject matter having an electrical device which responds to radiant light energy by (1) varying its electrical characteristics, (2) generating an electric current, or (3) means for determining the intensity or quantity of light emanating from a particular location or direction, wherein any of the aforementioned three are combined with photos:graphic illumination structure.

SEE OR SEARCH THIS CLASS, SUBCLASS:

6, for devices which respond to infrared radiation or other forms of thermal energy.

SEE OR SEARCH CLASS:

250, Radiant Energy, subclasses 200+ for photocells, circuits and apparatus, especially subclass 215 where combined with a diverse type device.

315, Electric Lamp and Discharge Devices: Systems, subclasses 149+ where the system is combined with radiant energy sensitive control means.

356, Optics: Measuring and Testing, subclasses 213+ for photometers per se and see the search class notes for other fields of search.

361, Electricity: Electrical Systems and Devices, subclasses 173+ for relays and solenoids combined with light condition responsive means.

396, Photography, subclasses 155+ for combinations of photographic lights and significant camera structure which may include light sensing or indicating.

5 This subclass is indented under subclass 3. Subject matter including means for measuring or indicating some condition.

SEE OR SEARCH THIS CLASS, SUBCLASS:

23+, for means to illuminate a scale or dial generally.

6 This subclass is indented under subclass 3. Subject matter including thermal sensitive means or means to facilitate the transfer of heat energy.

(1) Note. It is recognized that all material objects are heat conductive and heat sensitive to some degree, but this subclass is limited to means for significantly utilizing the thermal reaction characteristics of the objects.

7 This subclass is indented under subclass 3. Subject matter including means which selectively perform two dissimilar functions by appropriate rearrangement of parts or means including specific adaptor structure.

(1) Note. Included as dissimilar functions are such examples as: continuous lighting and flash lighting, single flash and plural simultaneous flashes for greater light intensity; combustive light source and incandescent or gas discharge light source; and means for converting from

manual lamp substitution to automatic indexing lamp substitution.

SEE OR SEARCH THIS CLASS, SUBCLASS:

12, for the combination of a photoflash bulb and a flood lamp to be used simultaneously but without switching means for converting from one type to the other.

8 This subclass is indented under subclass 3. Subject matter to which has been added a subcombination or assembly which is recognized as the subject matter of some other class.

(1) Note. The subject matter of subclasses 10 to 18 below are considered so basic to the operation characterizing this photographic illumination section that they are dealt with as manifestations of the photographic light operation rather than a combination for this subclass.

(2) Note. In this subclass are included combinations of a photographic light unit and (1) mechanical structure for connection to a camera or (2) cable storage means.

SEE OR SEARCH THIS CLASS, SUBCLASS:

12, for the combination of a photoflash bulb and a flood lamp without control structure such as a selector switch.

9 This subclass is indented under subclass 8. Subject matter wherein the added subcombination includes specific structure to hold an electrochemical cell.

SEE OR SEARCH THIS CLASS, SUBCLASS:

102, for an illuminator combined with a cane, baton, umbrella or club and which may include a battery.

103+, for an illuminator combined with wearing apparel and may include a battery.

109+, for an illuminator and implement which may include a battery.

183+, for an electric self powered lamp per se.

SEE OR SEARCH CLASS:

248, Supports, subclass 503 for vehicle mounted hold-downs.

294, Handling: Hand and Hoist-Line Implements, cross reference art collection 903 for hand-held battery carriers.

307, Electrical Transmission or Interconnection Systems, subclass 150 for power pack systems.

429, Chemistry: Electrical Current Producing Apparatus, Product, and Process, subclass 100 for a battery support, per se.

10 This subclass is indented under subclass 3. Subject matter including means for protecting the user from undesirable effects, or means to protect photographic lighting apparatus or means that include additional structure that must be manipulated before normal operation of photographic lighting apparatus can proceed.

11 This subclass is indented under subclass 3. Subject matter including two or more light sources, or holders for two or more light sources, or structure adapted to support or move said holders.

(1) Note. This subclass, or those indented thereunder, include structure that facilitate proper orientation for photos:graphic lighting such as rotary indexing mechanisms that may support and impart the desired movement to a support for plural light sources (flashcubes).

SEE OR SEARCH THIS CLASS, SUBCLASS:

20, for automatic substitution of nonphotographic light sources.

184, for self powered electric lamps with plural lamp bulbs.

209, for plural nonelectric light sources.

210, for plural carbon arc-type light sources.

227+, for plural light sources.

254, for light source substitution.

12 This subclass is indented under subclass 11. Subject matter wherein the light sources are of different sizes or types.

SEE OR SEARCH THIS CLASS, SUBCLASS:
228+, for plural light sources of a diverse nature for general illumination.

13 This subclass is indented under subclass 11. Subject matter including (1) means for replacing one light source with another, or (2) means for selectively energizing plural light sources one at a time.

14 This subclass is indented under subclass 13. Subject matter including means to move a light source or support from a nonilluminating position to an illuminating position, or which allows such movement to be made by the user from one predetermined position to another illuminating position.

(1) Note. Mere light source socket means that allow the user to insert a light bulb is not sufficient for this or the indented subclasses.

(2) Note. This and the indented subclasses include means for moving a light source support for plural light sources such as a flashcube, where not elsewhere classified.

SEE OR SEARCH THIS CLASS, SUBCLASS:
20, for automatic substitution of nonphotographic light sources.
254, for light source substitution.

SEE OR SEARCH CLASS:
431, Combustion, subclasses 357+ for (1) the combination of a specific Class 431 type combustible flashbulb and a nominal light modifier or reflector; or (2) the subcombination of a percussive actuator and indexing means for a combustible flashbulb; or (3) a nominal flashbulb with mechanical ignition means.

15 This subclass is indented under subclass 14. Subject matter combined with means to apply electrical energy to a combustible light source.

SEE OR SEARCH CLASS:
431, Combustion, subclasses 357+ for a specific Class 431 combustible flashbulb and electrically ignited primer without a specific light modifier or specific light reflector.

16 This subclass is indented under subclass 3. Subject matter including specific means to affect light waves emitted from an illuminating light source.

SEE OR SEARCH THIS CLASS, SUBCLASS:
257+, for the combination of a light source or support and a light modifier for general illumination.
317, for a light modifier, per se, for illumination.

17 This subclass is indented under subclass 16. Subject matter wherein the specific means includes two or more different light modifying structures.

SEE OR SEARCH THIS CLASS, SUBCLASS:
10, for the combination which may include a safety screen.

18 This subclass is indented under subclass 16. Subject matter wherein the specific means permit adjustment of the orientation or position of light affecting surfaces.

SEE OR SEARCH THIS CLASS, SUBCLASS:
228+, for adjustable or positionable light modifiers, per se.
269+, and 277+, for similar subject matter for general illumination.

19 This subclass is indented under the class definition. Subject matter comprising a light source which emits a ray of light having substantially equal components of wave energy in various directions transverse to the path of the ray and means to alter the light so that the ray has a

greater wave energy component in one transverse direction than in another.

(1) Note. Where the illuminating devices includes only a reflector or other means which may incidentally polarize the light; the patent is not classified in this subclass. This subclass includes only illuminating devices where means are provided especially for the purpose of polarizing the light emitted by the light source. See the other appropriate subclasses for illuminating devices with reflectors, especially subclasses indented under subclass 296.

SEE OR SEARCH THIS CLASS, SUBCLASS:

293, for a light source or support therefor and a nonpolarizing filter.

SEE OR SEARCH CLASS:

313, Electric Lamp and Discharge Devices, subclass 112 for an electric lamp having a light polarizer as an integral part thereof.

343, Communications: Radio Wave Antennas, subclass 756 for antennas with a polarization filter or converter; and subclasses 909+ for radio wave polarizers, per se.

359, Optics: Systems (Including Communication) and Elements, subclasses 483+ for (1) light polarizing compositions, (2) light polarizing devices, and (3) polarizing systems not provided for in some other optical class.

20 This subclass is indented under the class definition. Subject matter having either (1) one energy source and first and second light sources and means to supply energy from the energy source to the second light source in response to failure of the first light source; or (2) first and second energy sources and one light source and means to cause the second energy source to supply energy to the light source in response to failure of the first energy source; or (3) first and second energy sources and first and second light sources and means to cause the second energy source to supply energy to the second light source in response to failure of either the first energy source or the first light source.

21 This subclass is indented under the class definition. Subject matter wherein the light source is an incandescent electric filament enclosed in an envelope and may additionally be contained in an enclosing means and wherein electric circuit means is provided to connect the filament to a source of electrical energy and wherein means are provided to disconnect the filament from its source of electrical energy or to reduce or otherwise inhibit the flow of energy through the filament in response to the breakage of the envelope or the enclosing means.

22 This subclass is indented under subclass 21. Subject matter having an enclosure which is sealed and a fluid within the enclosure and wherein the means to disconnect the filament from its source of electrical energy etc. includes a switch and wherein the enclosure, the fluid and the switch are so interrelated that a break in the enclosure either (1) changes the amount of fluid in the enclosure to open the switch, or (2) changes the pressure of the fluid in the enclosure to open the switch and thus open the circuit to the filament.

23 This subclass is indented under the class definition. Subject matter combined with means, claimed or disclosed as bearing two or more markings corresponding to the same number of consecutive measurements of some variable other than merely the position, composition, or distribution of light from the illuminating structure of this class wherein the illuminating structure contributes to the illumination of the markings.

(1) Note. Generally, means for driving, operating or controlling indicator will exclude classification in this Class. For example, a movable pointer, clockwork mechanism, measuring means, condition responsive sensor or positions indicating sensor.

(2) Note. Combinations including specific structure of machinery or apparatus provided for in other classes, beyond recitations of structure necessary to set out the relationship of the illuminated scale, dial or markings, will generally be classified with that machinery or apparatus.

(3) Note. The variable of the definition above, could be just the position of a control knob. The mere disclosure of illuminating an unmarked panel, plate or knob is insufficient for classification herein.

SEE OR SEARCH THIS CLASS, SUBCLASS:

5, for a photographic illuminator with measuring or indicating means. See other subclasses directed to the basic illuminating structure of this class where means indicating the position, compositions or distribution of light may be claimed or disclosed.

SEE OR SEARCH CLASS:

40, Card, Picture, or Sign Exhibiting, subclass 204 for illuminated license plates; subclasses 480 and 502 for illuminated changeable exhibitors; and subclasses 541+ for illuminated signs.

73, Measuring and Testing, subclass 293 for a liquid level gauge with illuminating means; subclass 499 for a speed or acceleration measuring device with an illuminated reading device.

116, Signals and Indicators, subclass 250 for illumination of an indicator and see search notes for other search areas.

177, Weighing Scales, subclasses 177+ for such scales with illumination.

250, Radiant Energy, subclass 463.1 for self luminous dials, etc.

340, Communications: Electrical, see Notes above.

368, Horology: Time Measuring Systems or Devices, subclass 67 for illuminated clocks with recited drive or clockwork mechanism; subclass 227 for clock dials, per se.

24 This subclass is indented under subclass 23. Subject matter wherein the means is part of an instrument for reproducing sounds at a distance wherein the sounds are converted into electrical impulses for transmission by wire and whose circuit is independent of the means for illuminating the instrument.

(1) Note. The dial must be claimed for placement in this subclass rather than in subclass 88 below.

SEE OR SEARCH THIS CLASS, SUBCLASS:

88, for a general illuminator for a telephone instrument.

SEE OR SEARCH CLASS:

379, Telephonic Communications, subclasses 441+ for telephone transmitter dial lights.

25 This subclass is indented under subclass 23. Subject matter wherein the means bearing two or more markings indicates the temperature of the water or water vapor in a heat exchange device which transfers heat from water or water vapor to air.

(1) Note. Subject matter of this subclass type may comprise, for example, an attachment to a radiator cap or part of the radiator cap of an automobile or be attached to the filter neck or radiator of an automobile.

SEE OR SEARCH CLASS:

374, Thermal Measuring and Testing, subclasses 100+ for detailed structure of, thermometers, particularly 146 for radiator cap-mounted thermometers.

26 This subclass is indented under subclass 23. Subject matter wherein the illuminating structure includes (1) an object made of light transmitting material with a relatively narrow surface or side disposed adjacent a light source; or (2) a transparent, relatively elongated structure which transmits light rays from one point to another within the confines of its outer surface or surfaces by internal reflections or nodal transmission.

(1) Note. This and indented subclass include, for example, the combination of a relatively thin light transmitting object and a light source located in an aperture extending through its major surfaces or embedded between said major surfaces.

SEE OR SEARCH THIS CLASS, SUBCLASS:

31, for edge lighted panels without a dial or scale.

551+, for illumination means which includes light fibers, rods or pipes without a dial or scale.

SEE OR SEARCH CLASS:

40, Card, Picture, or Sign Exhibiting, subclasses 423 and 541+ for edge illuminated signs and including fiber optics.

116, Signals and Indicators, subclasses 200, 244, and 286+ for indicators using light guides.

340, Communications: Electrical, subclasses 815.4+, particularly subclasses 815.42+ for light piping used in electrically controlled visual signal indicators.

385, Optical Waveguides, appropriate subclasses for light transmitting fibers, rods, or pipes, per se.

27 This subclass is indented under subclass 26. Subject matter wherein the illuminating structure includes more than one light source.

28 This subclass is indented under subclass 23. Subject matter wherein the scale or dial is contained within an instrument case and the illuminating structure is external to the case; the case having an opening through which the scale or dial is observed and either another opening or light transparent portion through which light from the external illuminating structure enters the case to illuminate the scale or dial.

(1) Note. The instrument has no structure to measure a quantity and the dial has no arrangement or structure to classify the instrument or dial in an appropriate measuring or indicating class.

SEE OR SEARCH CLASS:

33, Geometrical Instruments, subclasses 792+ for dial type distance measuring, and subclasses 501+ for measuring type gauges.

73, Measuring and Testing, subclass 293 for illuminated liquid level gauges; subclass 499 for a speed or acceleration illuminated reading device; subclasses 388+ for fluid pressure gauges; and subclass 431 for instrument casings.

116, Signals and Indicators, subclass 250 for illumination of an indicator and see search notes for other search areas.

324, Electricity: Measuring and Testing, subclasses 76.11+ for measuring, testing or sensing electricity, subclasses 160+ for electrical speed measuring devices, and subclass 156 for casings, per se.

374, Thermal Measuring and Testing, subclasses 100+ for detailed structure of thermometers in such an arrangement.

29 This subclass is indented under subclass 23. Subject matter wherein the means includes a meter housing or casing and the illuminating structure includes a light source within said housing or casing.

30 This subclass is indented under subclass 29. Subject matter wherein the illuminating structure includes light modifiers or directors that are interposed between the means and the light source.

(1) Note. This subclass includes combinations wherein a light source is located behind the viewing face of a dial or scale plate that is translucent or transparent.

SEE OR SEARCH THIS CLASS, SUBCLASS:

153, for edge lighted modifiers or light conducting fibers, rods or pipes which may indirectly illuminate other elements.

33 This subclass is indented under the class definition. Subject matter having a plurality of light sources arranged to direct a condensed and substantially shadowless light onto a surface on which objects upon which manual operations are to be performed are supported.

(1) Note. Subject matter of this subclass type includes, for example, systems for illuminating patients for surgical operations.

SEE OR SEARCH THIS CLASS, SUBCLASS:

227+, for plural light sources for general illumination.

257+, for a single light source or light source support combined with a light modifier for general illumination.

34 This subclass is indented under the class definition. Subject matter having an emitter of light produced by a flameless chemical reaction combined with a light modifier or light modifier support structure.

SEE OR SEARCH THIS CLASS, SUBCLASS:

84, for illuminating structure combined with separate fluorescent or phosphorescent material.

SEE OR SEARCH CLASS:

206, Special Receptacle or Package, subclasses 219+ for a package for mixing.

252, Compositions, subclass 700 for a chemiluminescent composition.

313, Electric Lamp and Discharge Devices, subclasses 483+ for a Class 313 device combined with a luminescent solid or liquid material.

35 This subclass is indented under the class definition. Subject matter in which part or all of the illuminating means rotates continually in one direction about an axis.

(1) Note. Subject matter of this subclass type includes, for example, lighthouse beacons or rotating flashing devices which are mechanical.

SEE OR SEARCH THIS CLASS, SUBCLASS:

166+, for means to block a light source which are not continually revolving.

269+, for light projector which is rotatable.

SEE OR SEARCH CLASS:

40, Card, Picture, or Sign Exhibiting, subclasses 480 and 502 for revolving signs.

340, Communications: Electrical, subclasses 471+ for revolving lights used as hazard warning or emergency lights with vehicles.

36 This subclass is indented under the class definition. Subject matter which includes a steering mechanism or an element of a steering mechanism of a vehicle and wherein the motion of the steering mechanism or the element controls the direction taken by the vehicle; a multiple position switch or plural electric switches, a switch operator to make or break the multiple switch positions or to operate selectively the plural electric switches; a plurality of electric light sources, generally one source being directed forward and at least one light source directed to each side of a vehicle, and in which the motion of the steering mechanism or the steering mechanism element controls the switch operator to control circuits to at least some of the plurality of electric lights.

SEE OR SEARCH CLASS:

315, Electric Lamp and Discharge Devices: Systems, subclass 81 for vehicle headlight systems where no light support is claimed or wherein the headlight is only nominally recited.

37 This subclass is indented under the class definition. Subject matter comprising means to change the direction of movement of a transporting device, or a movable element of such means, and a tiltable or rotatable lamp or lamp support wherein motion imparted to the direction changing means or to the element thereof to change the direction of movement of the transporting device is also used concurrently to tilt and rotate the lamp or lamp support.

(1) Note. The subject matter of this subclass type includes lamps or lamp supports which are directly supported by the steering gear or the steering gear element so that the motion of the steering gear or element to direct a vehicle is also the same motion given to the lamp or lamp support.

SEE OR SEARCH CLASS:

315, Electric Lamp and Discharge Devices: Systems, subclass 81 for vehicle headlight systems where no

light support is claimed or wherein the headlight is only nominally recited.

38 This subclass is indented under subclass 37. Subject matter having a fluid motion transmission means controlled by the steering gear or steering gear element connected to the lamp or to the lamp support so that the motion imparted by the steering gear or steering gear element to direct the movement of a vehicle is also used concurrently to transmit motion through the fluid motion transmission means to tilt or rotate the lamp or lamp support.

(1) Note. A dashpot to damp the oscillation of a pivoted lamp or pivoted lamp support is not considered a fluid motion transmission means of this subclass type.

39 This subclass is indented under subclass 37. Subject matter wherein the lamp or lamp support is rotatable in a horizontal plane in response to the movement of the transporting device or a movable element of such means and the lamp or lamp support or at least a portion of the lamp or lamp support is rotatable also in a vertical plane and manual means is connected to the lamp or lamp support or to the portion of the lamp support to pivot the lamp or lamp support in the vertical plane.

(1) Note. The manual means includes mechanism responsive to the foot, hand or the other member of a human operator to impart motion to pivot the lamp or lamp support or portion thereof in the vertical plane.

40 This subclass is indented under subclass 37. Subject matter having means operated by the motion of some portion of the human body to tilt or rotate the lamp or lamp support independently of the steering mechanism or element.

41 This subclass is indented under subclass 37. Subject matter which includes means responsive to the movement of the vehicle steering mechanism or element when a turn by the vehicle is being made in one direction relative to linear movement of the vehicle to rotate the pivoted lamp or pivoted lamp support in the same direction as the turn but not when a turn by the vehicle is being made in the opposite relative direction.

(1) Note. Typically, subject matter of this subclass type includes two headlamps where one headlamp turns and the other remains stationary when a vehicle steering mechanism turns in one direction. When the vehicle turns in the other direction, the one headlamp is stationary and the other turns in the opposite direction to the first turn.

42 This subclass is indented under subclass 37. Subject matter wherein the steering mechanism or element includes or comprises a rotatable and turnable annular or circular vehicle supporting member which contacts and rolls on a vehicle supporting surface; or wherein a turnable means is provided to support means to stop or decelerate the vehicle and wherein the lamp or lamp support is tilted or rotated by the turning motion of the vehicle supporting member or the stopping means support.

43 This subclass is indented under subclass 37. Subject matter wherein there are two lamps each rotatable about an axis or two lamp supports each having a portion rotatable about an axis, a motion transmission means connecting the steering gear or the steering gear element to both of the rotatable lamps or to the two rotatable portions of the lamp supports so that motion imparted by the steering gear or the steering gear element to turn or direct a vehicle is also imparted through the motion transmission means to rotate both of the lamps concurrently or rotate both of the lamp support portions with the turning or direction of a vehicle.

44 This subclass is indented under subclass 43. Subject matter wherein there is a single mechanical connection between the steering gear or the steering gear element and the motion transmission means.

45 This subclass is indented under subclass 44. Subject matter wherein the motion transmission means is so connected to the two rotatable lamps or to the two rotatable lamp support portions that the motion imparted to the motion transmission means by the steering gear or the steering gear element first turns one of the two rotatable lamps and the motion of the "one" rotatable lamp in turn rotates the second rotat-

able lamp or the motion imparted to the motion transmission means by the steering gear or steering gear element first turns one of rotatable lamp support portions and the motion of the "one" rotatable lamp support portion in turn rotates the second rotatable lamp support portion.

46 This subclass is indented under subclass 45. Subject matter wherein the steering gear or the steering gear element includes either a first movable member to receive motion from a human operator; a movable shaft which receives the motion from the first movable member; a second movable member receiving the motion from the movable shaft or a movable rod moved by the second movable member and the motion transmission means is connected to either the first movable member, the movable shaft, the second movable member or the movable rod.

47 This subclass is indented under subclass 46. Subject matter wherein the motion transmission means includes a rigid rod connected to (1) each of the lamps to rotate each of the lamps about its axis, or (2) to each of the rotatable portions of the lamp supports to rotate each of the rotatable lamp support portions about its axis and a rigid member connected directly to each of the rigid rods to impart motion to the rods.

48 This subclass is indented under subclass 45. Subject matter wherein motion is imparted to the motion transmission means to move the two rotatable lamps or lamp portions concurrently by a movable bar which is part of the steering gear and which functions to join two movable spindle arms of a vehicle steering arrangement so that the spindle arms turn concurrently in the same direction.

49 This subclass is indented under subclass 44. Subject matter wherein the steering gear includes, or the steering gear element is a movable member to receive motion from a human operator, a movable shaft which receives the motion from the movable member responsive to the human operator, a movable member receiving the motion from the movable shaft, or a movable rod moved by the member receiving the motion from the movable shaft.

50 This subclass is indented under subclass 49. Subject matter wherein the motion transmission means includes a rigid crank rod directly connected to the rotatable lamp or lamp support to pivot the lamp or lamp support about an axis and a rigid movable member connected to the crank rod so that the motion of the rigid movable member given by the movable steering gear element turns the crank rod to impart a turning motion to the rotatable lamp or lamp support to move the lamp or lamp support about its axis.

51 This subclass is indented under subclass 44. Subject matter wherein motion is imparted to the motion transmission means to move the two rotatable lamps or lamp support portions concurrently by a movable bar which is part of the steering gear and which function to join two movable spindle arms of a vehicle steering arrangement so that the spindle arms turn concurrently in the same direction.

52 This subclass is indented under subclass 43. Subject matter wherein motion is imparted to the motion transmission means to move the two rotatable lamps or lamp support portions by a movable bar which is part of the steering gear and which functions to join two movable spindle arms of a vehicle steering arrangement so that the spindle arms turn concurrently in the same direction.

53 This subclass is indented under subclass 37. Subject matter wherein the rotatable lamp or lamp support is connected through a motion transmission means to the means to change the direction of a vehicle or a movable element of such means which includes or is a movable steering member to receive motion from a human operator; a movable shaft which receives the motion from the member responsive to a human operator; a movable member receiving the motion from the movable shaft or a movable rod moved by the member receiving the motion from the movable shaft.

54 This subclass is indented under subclass 53. Subject matter wherein the motion transmission means includes a rigid crank rod directly connected to the rotatable lamp or lamp support to pivot the lamp or lamp support about an axis and a rigid movable member connected to

the crank rod so that the motion of the rigid movable member received from the movable steering member or the movable shaft or the movable member receiving the motion from the shaft or the movable rod, causes the crank rod to pivot the lamp or lamp support about the axis.

55 This subclass is indented under subclass 37. Subject matter wherein the lamp or lamp support is rotatable and the means to change the direction of movement of a transporting device includes, or the movable element of such device, is a steering knuckle which supports a steering wheel spindle or an arm connected to the knuckle; a motion transmission means connecting the knuckle or the arm connected to the knuckle to the lamp or lamp support so that motion imparted by the knuckle or the arm connected to the knuckle to turn or direct a vehicle is also imparted through the motion transmission means to rotate the lamp or lamp support concurrently with the turning of a vehicle.

(1) Note. Attachments which are motion transmission elements which are connected to a pivoted lamp or lamp support are here.

56 This subclass is indented under subclass 55. Subject matter wherein the motion transmission means or the rotatable lamp or lamp support includes a motion transfer linkage which permits a portion of one member to slide within a portion of another member while transferring the motion of the knuckle or knuckle arm to rotate the lamp or lamp support.

57 This subclass is indented under subclass 37. Subject matter wherein the vehicle steering gear includes or the vehicle steering gear element is a bar capable of motion which functions to move both steering wheels of a vehicle in the same direction and the lamp is rotatable about an axis or the lamp support has a portion rotatable about an axis; and a motion transmission means connects the bar to the rotatable lamp or the rotatable portion of the lamp support so that the motion of the bar is used to direct the movement of a vehicle and concurrently to impart motion to the rotatable lamp or the rotatable portion of the lamp support through the motion transmission means.

(1) Note. Many patents here include a spring forming part of the rotating means which spring upon rotative movement to the rotative lamp or rotative portion of the lamp support stores energy to revert the rotating lamp or rotating portion of the lamp support back to its initial position before movement by the steering gear or steering gear element. Springs are used to bias the lamp or support against movement in a vertical direction.

58 This subclass is indented under subclass 57. Subject matter which includes a means to release the rotatable lamp or the rotatable portion of the lamp support from the control of the bar and the motion transmission means.

(1) Note. The means to release may be between a tie rod and the motion transmission means, part of the transmission means, between the rotatable lamp or the rotatable portion of the lamp support and the motion transmission means or part of the rotatable lamp or rotatable part of the lamp support.

59 This subclass is indented under subclass 57. Subject matter wherein the motion transmission means includes a rigid rod connected to the rotatable lamp or the rotatable portion of the lamp support to pivot the lamp or the rotatable portion of the lamp support about its axis and therein a movable rigid member connected to the rigid rod so that the motion imparted by the bar is transmitted through the movable member to the rod to turn the pivoted lamp or rotatable portion of the lamp support about its axis.

60 This subclass is indented under subclass 59. Subject matter which includes a movable connection between (1) the bar and the motion transmission means, (2) the rigid rod and the rigid member, (3) the rigid rod and the rotatable lamp or the rotatable portion of the lamp support, or (4) any two members of the motion transmission means wherein the movable connection includes a movable elongated opening formed in a member or by movable elements forming such an opening and a movable second member shaped to move within the opening or between the elements forming the opening

whereby upon movement of the elongated opening; the second member between or within the opening will move or when the second member moves within or between the member or elements forming the member the elongated opening will move to transmit motion.

84 This subclass is indented under the class definition. Subject matter comprising a light source or light source support combined with a separate fluorescent or phosphorescent material.

(1) Note. This subclass does not include a light source per se wherein fluorescent material is merely applied to a lamp bulb. See the search class notes below.

SEE OR SEARCH THIS CLASS, SUBCLASS:

34, for chemiluminescent lighting structure that may include fluorescent or phosphorescent material.

217+, for elongated light sources of the fluorescent type wherein the fluorescent material is part of the light sources.

260, for fluorescent light source combined with modifiers.

SEE OR SEARCH CLASS:

250, Radiant Energy, subclasses 483.1+ for luminescent devices responsive to invisible radiation; and subclasses 493.1+ for radiant energy generation and sources that may include fluorescent or phosphorescent materials.

252, Compositions, subclasses 301.2+ for fluorescent or phosphorescent compositions.

313, Electric Lamp and Discharge Devices, subclasses 483+ and the subclasses specified in the notes thereto for electric lamps, per se, and electronic tubes which have combined therewith a fluorescent or phosphorescent material.

85 This subclass is indented under the class definition. Subject matter combined with a panel or cabinet on which are mounted switches, indicators or other apparatus used for centrally controlling electrical or mechanical devices, not classified elsewhere.

SEE OR SEARCH THIS CLASS, SUBCLASS:

23, for scale or dial illuminators.

86, through 96, for specific electrical or mechanical devices combined with illuminating structure.

86 This subclass is indented under the class definition. Subject matter combined with a sound transducer with means for illuminating some part of the transducer.

(1) Note. In this and the indented subclasses are placed patents whose claims all relate to the illuminating features to be applied to the transducer and such combinations with modifications of the transducer merely for the promotion of illumination. If specific structure is claimed in the transducer with which the source of light is combined, which specific structure is independent of the illumination, the patent is classified with the transducer whether the illuminating features are broadly or specifically claimed.

87 This subclass is indented under subclass 86. Subject matter wherein the transducer is an instrument for reproducing sound usually by means of the vibration of a stylus or needle following a spiral groove on a revolving disc or cylinder.

88 This subclass is indented under subclass 86. Subject matter wherein the transducer is an instrument for reproducing sounds at a distance wherein the sounds are converted into electrical impulses for transmission by wire and whose circuit is independent of the means for illuminating the transducer.

(1) Note. This subclass includes illuminator attachments for a telephone wherein the illuminator includes mechanical switch actuator structure intended to interact with telephone structure such as a switch arm which would engage and be operated by the movement of the telephone receiver.

SEE OR SEARCH THIS CLASS, SUBCLASS:

24, for means to illuminate a telephone dial plate other than just by an external light source placed for general illumination of the telephone as a whole.

SEE OR SEARCH CLASS:

379, Telephonic Communications, appropriate subclasses, for specific telephones and systems.

89 This subclass is indented under the class definition. Subject matter in combination with a device including an assemblage of parts that transmit forces, motion, and energy one to another in a predetermined manner and generally support structure wherein illuminating means of the class is attached to or built into the device to illuminate some part of the device or work area of the device, and not classified elsewhere.

(1) Note. Illuminating light supports are considered basic subject matter of the class even if they include machine elements, and are classified in subclasses 382+ below rather than being considered a combined device for this section 89+.

(2) Note. Hand held machine tools or implements are classified in subclasses 109+ below.

(3) Note. Mere supports or holders of objects other than illuminating elements are classified below with the specific type of object support or holder, e.g., subclasses 98+, paper holders, subclasses 127+, furniture, subclasses 135+, viewing mirror, and subclasses 154+, container.

(4) Note. Heating or refrigerating and fluid dispensers are provided for below in subclasses 92+ and 96.

SEE OR SEARCH THIS CLASS, SUBCLASS:

109+, for hand-held machine tools combined with an illuminator.

SEE OR SEARCH CLASS:

34, Drying and Gas or Vapor Contact With Solids, subclass 88 for apparatus with illuminating means.

83, Cutting, subclasses 520+ for cutting apparatus with illuminating or viewing means for work.

269, Work Holders, subclass 11 for holder illuminating means.

400, Typewriting Machines, appropriate subclasses for typewriters, per se.

408, Cutting by Use of Rotating Axially Moving Tool, subclass 16 for combinations with signal, indicator, illumination or optical means.

416, Fluid Reaction Surfaces (i.e., Impellers), subclass 5 for such surfaces with illumination means.

425, Plastic Article or Earthenware Shaping or Treating: Apparatus, subclasses 169+ for the class device with an illuminator.

90 This subclass is indented under subclass 89. Subject matter wherein the machine performs the function of uniting or ornamenting material by means of a strand which is inserted (stitched) in the material at spaced locations by a needle having an eye, or equivalent structure, and enchained or otherwise locked in position.

SEE OR SEARCH CLASS:

112, Sewing, subclasses 2+ for sewing machines, per se.

91 This subclass is indented under subclass 89. Subject matter wherein the machine is designed or adapted for the removal of foreign matter, not elsewhere classified.

SEE OR SEARCH CLASS:

15, Brushing, Scrubbing, and General Cleaning, subclass 324 for vacuum cleaners with an illuminator for the work area.

134, Cleaning and Liquid Contact With Solids, subclass 113 for apparatus combined with alarm, signal, indicating, testing, inspecting, illuminating or display means.

92 This subclass is indented under the class definition. Subject matter combined with apparatus for heating or cooling articles not otherwise classified.

(1) Note. Apparatus including an enclosure with a display or observation window for articles that might be placed in the enclosure is classified in subclass 126 below.

SEE OR SEARCH THIS CLASS, SUBCLASS:

126, for an illuminated showcase with heat insulation or dissipation means.

218, for an elongated source light unit with cooling means, and also the following subclasses for other illumination structure with heating or cooling means: 264, 294, 345, 364, 373, and 437.

SEE OR SEARCH CLASS:

99, Foods and Beverages: Apparatus, subclass 341 for cooking apparatus with illuminating means.

126, Stoves and Furnaces, subclass 97 for a heating and illuminating stove using a liquid fueled wick, subclass 213 for an illuminated stove lid or top, subclass 267 for a dinner bucket combined with a lantern heated by fluid fuel or subclass 388.1 for a liquid heater having an open-top vessel that may include a lid and an indicator or signaler feature.

165, Heat Exchange, subclasses 58+ for heating and cooling apparatus.

219, Electric Heating, subclass 220 for a heating device with light means; and subclasses 339+ for a fluid heater of the radiant energy type.

312, Supports: Cabinet Structure, subclass 236 for cabinets for heating and cooling; and subclass 116 for the refrigerated showcase type.

340, Communications: Electrical, subclass 640 for a heater element condition indicator; and subclass 655 for a heating circuit energization indicator.

432, Heating, subclass 32 for combinations with indicating, illuminating or inspection means.

93 This subclass is indented under subclass 92. Subject matter wherein the apparatus is combined with a light fixture which burns a material to produce light.

SEE OR SEARCH THIS CLASS, SUBCLASS:

159, 209 and 266, for nonelectric illuminators, per se, of the class type.

94 This subclass is indented under subclass 92. Subject matter combined with a circuit breaker linked with a closure of said apparatus to control the operation of a light source.

SEE OR SEARCH THIS CLASS, SUBCLASS:

100, 135 and 155, for door or closure-controlled illuminator switches combined with other apparatus.

SEE OR SEARCH CLASS:

200, Electricity: Circuit Makers and Breakers, subclasses 61.62+ for closure operated circuit breakers.

307, Electrical Transmission or Interconnection Systems, subclasses 10.8+ for automobile light systems.

315, Electric Lamp and Discharge Devices: Systems, subclass 84 for circuits dealing with a door or closure controlled load device.

95 This subclass is indented under the class definition. Subject matter combined with a cover for an electrical circuit breaker or electrical receptacle, not classified elsewhere.

SEE OR SEARCH CLASS:

200, Electricity: Circuit Makers and Breakers, subclasses 310+ for illuminated switch indicators.

340, Communications: Electrical, subclasses 640 and 656 for pilot-light indicators.

96 This subclass is indented under the class definition. Subject matter combined with structure for distributing or dealing out liquid, gaseous, or fluidic materials for purposes other than supplying fuel or heat exchange materials to an artificial light source, not classified elsewhere.

SEE OR SEARCH THIS CLASS, SUBCLASS:

118, for the combination of an illuminator and a pen or pencil.

149, for illuminating structure combined with a subceiling with fluid handling means.

218, 294, 345, 364, 373, and 437, for illumination structure of the class with ventilating or cooling means.

SEE OR SEARCH CLASS:

222, Dispensing, especially subclass 113 for dispensing apparatus combined with an illuminator and see the notes thereat.

239, Fluid Sprinkling, Spraying, and Diffusing, subclass 284.2 for a liquid sprayer for a headlamp lens.

97 This subclass is indented under the class definition. Subject matter comprising a generally planar, horizontal transparent or translucent material that is structurally located over and with a light source or light source support and serves as a support for material to be illuminated, not elsewhere classified.

(1) Note. Included in this subclass are drafting tables with the above illuminating structure for the purpose of facilitating tracing or tables for inspecting fabrics or other thin flexible materials.

(2) Note. Class 108, subclass 23 with similar patents, was not screened.

SEE OR SEARCH THIS CLASS, SUBCLASS:

98+, for means to hold or support paper or similar material combined with illumination means.

SEE OR SEARCH CLASS:

40, Card, Picture, or Sign Exhibiting, subclass 361 for transparent film viewers.

108, Horizontally Supported Planar Surfaces, subclass 23 for tables with illumination means, and see (2) Note above.

355, Photocopying, subclasses 113+ for light boxes used for contact printing.

356, Optics: Measuring and Testing, subclasses 239.1+ for flaw inspection means involving passing light through a transparent or translucent article.

399, Electrophotography, for illumination systems including light sources used in electrophotographic devices, specifically subclasses 177+ for exposure.

98 This subclass is indented under the class definition. Subject matter combined with means for supporting sheet-like reading or writing material, and not classifiable elsewhere.

SEE OR SEARCH THIS CLASS, SUBCLASS:

97, for support means including a transparent or translucent supporting surface over a light source.

127, for articles of furniture in general, combined with illuminating means.

SEE OR SEARCH CLASS:

40, Card, Picture, or Sign Exhibiting, subclasses 714+ for tables with illumination means, subclasses 341+ for copyholders, and subclasses 541+ for illuminated signs.

99 This subclass is indented under subclass 98. Subject matter wherein the combination constitutes a unitary, readily carried structure.

SEE OR SEARCH THIS CLASS, SUBCLASS:

109, for other readily carried structure combined with illuminating means.

100 This subclass is indented under the class definition. Subject matter combined with a device attached to some part of a door or its knob to illuminate the knob or a hole for receiving a key not elsewhere classified.

SEE OR SEARCH THIS CLASS, SUBCLASS:

94, for the combination of a heater or refrigerator and illumination means controlled by a door.

137, and 155, for the combination of a vanity case and illumination means controlled by a closure.

SEE OR SEARCH CLASS:

200, Electricity: Circuit Makers and Breakers, subclasses 61.62+ for the combination for a switch and closure, closure operator or accessory.

315, Electric Lamp and Discharge Devices: Systems, subclass 84 for the combination of a load of the class type and door or closure controlling means.

101 This subclass is indented under the class definition. Subject matter combined with a receptacle for holding a liquid other than fuel or heat exchange materials for a light source, not classified elsewhere.

SEE OR SEARCH THIS CLASS, SUBCLASS:

96, for subject matter of this class combined with a fluid dispenser.

118, for a pen and illuminator.

154+, for a general container with illumination means.

318, for a light modifier of the fluid medium type.

417, for a font support.

SEE OR SEARCH CLASS:

40, Card, Picture, or Sign Exhibiting, subclasses 406+ for display devices with gas or liquid movement.

99, Foods and Beverages: Apparatus, subclass 341 for cooking apparatus with illumination means.

134, Cleaning and Liquid Contact With Solids, subclass 113 for apparatus of the class combined with illuminating means.

102 This subclass is indented under the class definition. Subject matter combined with a cane, baton, umbrella or club of the hand-held type, and not classified elsewhere.

SEE OR SEARCH THIS CLASS, SUBCLASS:

109+, for an illuminator combined with other hand-held implements.

157+, for self powered portable illuminators of the hand-held type, especially subclasses 202+.

SEE OR SEARCH CLASS:

33, Geometrical Instruments, subclasses 293+ for sighting rods or targets.

84, Music, subclass 477 for twirling and conducting batons.

135, Tent, Canopy, Umbrella, or Cane, subclasses 16+ for umbrellas and canes, per se.

103 This subclass is indented under the class definition. Subject matter combined with (1) a garment, covering or clothing, (2) a harness to be worn by an animal, or (3) an article generally composed of precious stones and metal (jewelry) and of an analogous nature or imitations of the same which are intended to be worn upon the person as ornaments, not otherwise classified.

SEE OR SEARCH THIS CLASS, SUBCLASS:

191, for a flashlight casing with support means.

382, for strap supports for an illuminator.

396, for clamp or hook supports for an illuminator.

SEE OR SEARCH CLASS:

2, Apparel, appropriate subclasses for garments or clothing, per se.

36, Boots, Shoes, and Leggings, subclasses 122+ for boots and shoes, per se.

119, Animal Husbandry, subclasses 858+, especially subclass 859, for an animal collar including an illumination element when the collar is more than nominally recited.

104 This subclass is indented under subclass 103. Subject matter wherein a light source or light source support is combined with articles generally composed of precious metal and stones of an analogous nature not otherwise classified or imitations of the same, which are intended to be worn upon the person as ornaments.

SEE OR SEARCH CLASS:

24, Buckles, Buttons, Clasps, etc., appropriate subclasses for jewelry fasteners.

63, Jewelry, appropriate subclasses for jewelry, per se.

105 This subclass is indented under subclass 103. Subject matter wherein the garment, covering or harness is to be worn on the head of the animal or supported by some portion of the head.

(1) Note. A head covering as used in this and the indented subclasses refers to elements which extend generally along and contiguous to the head surface, and (1) over the top of the head, usually in arch or dome-like fashion, and/or (2) peripherally around at least a portion of the front, sides and/or back of head in general conformance with head contour, as exemplified by a mere head band.

SEE OR SEARCH CLASS:

2, Apparel, subclasses 171+ for head coverings, per se.

351, Optics: Eye Examining, Vision Testing and Correcting, subclasses 41+ for spectacles and eyeglasses, per se.

106 This subclass is indented under subclass 105. Subject matter wherein the covering extends generally over the major portion of the head as distinguished from a mere head band or open framework.

SEE OR SEARCH THIS CLASS, SUBCLASS:

396, for hook or clamp-type lamp supports for headgear.

SEE OR SEARCH CLASS:

2, Apparel, subclass 422 for cap attachments for receiving light unit structure.

107 This subclass is indented under subclass 106. Subject matter adapted for use with a nonelectric type illuminator.

108 This subclass is indented under subclass 103. Subject matter wherein the garment, clothing or harness includes means passing over the shoulder or encircling the torso of the animal.

(1) Note. This subclass includes sling-type suspension means where an element passes over one shoulder, around the neck, and over the other shoulder.

SEE OR SEARCH CLASS:

2, Apparel, subclass 310 for shoulder suspension or torso or limb encircling garment supporters or retainers.

224, Package and Article Carriers, subclasses 5+ for body and belt attached carriers.

441, Buoys, Rafts, and Aquatic Devices, subclass 89 for body attached, worn, supporting, or encircling buoyant devices combined with diverse class art devices.

109 This subclass is indented under the class definition. Subject matter combined with a hand-held device whose function is to perform, or assist in the performance of a specific operation, or a hand-held holder for such device other than a container, not classified elsewhere.

(1) Note. This section includes a hand-held holder for a key in subclass 116, below.

(2) Note. An illuminator with a handle but without specific structure for holding a tool element will be classified according to its illuminator structure or function, such as a round flashlight in subclass 202.

SEE OR SEARCH THIS CLASS, SUBCLASS:

23+, for hand-held instruments with an illuminated scale or dial.

34, for chemiluminescent illuminators that may be hand held.

96, for hand-held fluid dispensers with illuminators.

101, for hand-held liquid containers and illuminators.

102, an illuminator combined with a cane, baton, umbrella or club.

136+, for vanity case container with a mirror and illuminator.

138+, for an inspection device with a mirror and illuminator.

154+, for an illuminator combined with a container.

157+, for self powered lamps, per se, which may include a handle, and see (2) Note above.

SEE OR SEARCH CLASS:

33, Geometrical Instruments, especially subclasses 348+ for measuring instruments of the class type combined with illumination means, such as a spirit level.

269, Work Holders, subclass 11 for holder illuminating means.

349, Liquid Crystal Cells, Elements and Systems, subclasses 61+ for liquid crystal devices with illumination.

359, Optics: Systems (Including Communication) and Elements, subclasses 385+, 475, 591+, and 798+ for optical devices with illuminating means.

600, Surgery, subclasses 108, 160+, 179+, 183, 191, 213, 224, 242, 246, and 249 for various diagnostic instruments combined with illuminating means.

110 This subclass is indented under subclass 109. Subject matter wherein the device is a weapon from which a shot may be discharged by gunpowder or structure formed to resemble a weapon.

SEE OR SEARCH CLASS:

42, Firearms, appropriate subclasses for firearms, per se, and note especially subclass 1.

353, Optics: Image Projectors, subclass 42 for a light spot pointer projector, per se; subclass 43 for a projector shaped like a pistol or gun.

463, Amusement Devices: Games, subclasses 51+ for a simulated projectile game wherein a light ray is used to simulate a projectile.

111 This subclass is indented under subclass 110. Subject matter wherein illuminator structure may be attached to the weapon in such a way that a shot may not be discharged.

(1) Note. This subclass includes patents wherein a light source or switch mechanism is placed in the bore of the weapon.

112 This subclass is indented under subclass 110. Subject matter which includes a hand-held portable illumination device having a housing shaped to resemble a firearm having a hand grip by which the device is held and carried.

SEE OR SEARCH THIS CLASS, SUBCLASS:

191, for an electric self powered lamp having a handle or other mounting means.

SEE OR SEARCH CLASS:

446, Amusement Device: Toys, subclasses 405+ and 403 a toy gun, having a lamp, and subclass 485 for other toys having lamps.

113 This subclass is indented under subclass 110. Subject matter wherein the class illumination structure includes a circuit breaker by a part of a means moved by a finger to fire the weapon.

114 This subclass is indented under subclass 110. Subject matter wherein the weapon includes an electric circuit breaker located in a handle of the weapon.

SEE OR SEARCH THIS CLASS, SUBCLASS:

112, for an imitation firearm that may include a switch in the handle thereof.

115 This subclass is indented under subclass 109. Subject matter wherein the device is for cutting, dressing or trimming hair.

SEE OR SEARCH THIS CLASS, SUBCLASS:

91, for a cleaning machine with illuminator.

116 This subclass is indented under subclass 109. Subject matter wherein the instrument includes means for retaining a lock key.

117 This subclass is indented under subclass 109. Subject matter wherein the device includes a metallic mass which, when heated, may be used to apply heat to another object.

(1) Note. This subclass includes flat irons, and soldering irons not classified elsewhere.

SEE OR SEARCH THIS CLASS, SUBCLASS:

92+, for heaters that are not hand held and combined with illumination means not classified elsewhere.

SEE OR SEARCH CLASS:

219, Electric Heating, subclass 220 for electrical heating devices with light means; subclasses 227+ for hand manipulative heating devices, especially subclass 230 where combined with light means.

340, Communications: Electrical, subclass 640 for electrical pilot-light indicators.

118 This subclass is indented under subclass 109. Subject matter wherein the device is a coating implement with material supply.

SEE OR SEARCH CLASS:

401, Coating Implements With Material Supply, appropriate subclasses for coating implements, per se.

119 This subclass is indented under subclass 109. Subject matter wherein the device is used to facilitate a mechanical operation such as driving, forming, shaping or finishing an article.

SEE OR SEARCH CLASS:

30, Cutlery, appropriate subclasses for hand cutting implements, per se.

81, Tools, appropriate subclasses for hand tools, per se.

120 This subclass is indented under subclass 119. Subject matter wherein the device includes an elongated shank, bit or blade portion.

SEE OR SEARCH THIS CLASS, SUBCLASS:

102, for hand-held devices with elongated portions such as canes, batons, umbrellas or clubs.

121 This subclass is indented under the class definition. Subject matter comprising a light source or light source support combined with either (1) a figure with five or more points that represents a star, or (2) a figure with an upright bar traversed by a horizontal bar, not classified elsewhere.

SEE OR SEARCH THIS CLASS, SUBCLASS:

227+, for plural light sources.

SEE OR SEARCH CLASS:

40, Card, Picture, or Sign Exhibiting, appropriate subclasses, for movable display exhibitors or those with the illusion of motion, and with illuminating means.

428, Stock Material or Miscellaneous Articles, subclass 3 for a cruciform, per se, subclass 11 for a star ornament, per se.

122 This subclass is indented under the class definition. Subject matter comprising a light source or light source support combined with vegetation (i.e., any member of living beings typically lacking locomotive movement or obvious nervous or sensory organs) or parts (e.g., blossoms, leaves) or simulations thereof and not classifiable elsewhere.

SEE OR SEARCH CLASS:

40, Card, Picture, or Sign Exhibiting, appropriate subclasses for movable display exhibitors or those with the illusion of motion, and with illuminating means. See especially subclasses 480, 502, 543+, and 614+.

428, Stock Material or Miscellaneous Articles, appropriate subclasses for ornaments, per se, especially subclass 10 for a wreath-type ornament.

123 This subclass is indented under subclass 122. Subject matter wherein the member is a woody perennial plant having an elongated main stem generally with few branches on its lower part, or a shrub or herb, or an imitation thereof, and not classified elsewhere.

124 This subclass is indented under the class definition. Subject matter comprising a light source or light source support combined with an imitation of a living being of the nonvegetable type (i.e., typically differing from plants in its capacity for spontaneous movement and rapid motor response to stimulation) and not classifiable elsewhere.

SEE OR SEARCH CLASS:

40, Card, Picture, or Sign Exhibiting, subclasses 411+ for movable figure display; subclass 540 for illuminated

dummies; and subclass 543 for displays with the illusion of motion.

446, Amusement Devices: Toys, subclass 392 for a figure toy luminous eyes, and subclass 485 other toys having lamps.

125 This subclass is indented under the class definition. Subject matter combined with an enclosure that includes a transparent wall or with a transparent wall for such an enclosure which permits an article that may be placed within the enclosure to be seen from outside the enclosure, and not classifiable elsewhere.

SEE OR SEARCH THIS CLASS, SUBCLASS:

133, for cabinets without a transparent display wall combined with illuminating means.

154+, for containers without a transparent display wall combined with illuminating means.

SEE OR SEARCH CLASS:

40, Card, Picture, or Sign Exhibiting, subclasses 446+ for changeable exhibitors, and subclass 540 for illuminated display dummies.

312, Supports: Cabinet Structure, subclass 114 for a showcase-type refrigerator, and subclass 223.5 for cabinets with illumination means.

126 This subclass is indented under subclass 125. Subject matter wherein the enclosure includes structure to minimize the transfer of thermal energy through a wall of the enclosure, or to dispel undesirable thermal energy, e.g., refrigerated showcase.

SEE OR SEARCH CLASS:

62, Refrigeration, subclasses 246+ for apparatus of the display type.

127 This subclass is indented under the class definition. Subject matter combined with articles of the support type used for the general convenience of occupants of a room or other occupiable space, and not classifiable elsewhere.

(1) Note. This subclass, and those indented hereunder, deal with articles that function to merely support an object. Articles, whose function is dynamic, are generally classified in the subclasses above or in the class providing for the function, e.g., telephone, refrigerator, machinery, etc.

(2) Note. In this subclass, and those indented hereunder, the supporting is of articles other than a light unit, per se. For example, a base with a vertical standard with a light socket attached thereto, is considered a light support and is not classified here unless there is also recited additional structure for supporting some diverse art object such as a projecting shelf for an ash tray.

SEE OR SEARCH THIS CLASS, SUBCLASS:

97, for table with a transparent or translucent top located over a light source.

SEE OR SEARCH CLASS:

108, Horizontally Supported Planar Surfaces, subclass 23 for a table with illumination means.

211, Supports: Racks, appropriate subclasses.

248, Supports, appropriate subclasses.

128 This subclass is indented under subclass 127. Subject matter combined with a smooth surface intended to form an image of an object other than a light source by reflection.

(1) Note. Mirrored medicine wall cabinets or nonportable mirrored vanity or makeup stands/racks are classified here rather than in subclasses 136+ below.

SEE OR SEARCH THIS CLASS, SUBCLASS:

135+, for a mirror combined with illumination structure.

136+, for portable vanity cases.

SEE OR SEARCH CLASS:

312, Supports: Cabinet Structure, subclass 224 for cabinet structure with a mirror.

129 This subclass is indented under subclass 128. Subject matter wherein elements of the combination may be readily changed in position with

respect to one another or to a stationary object as a unit.

SEE OR SEARCH THIS CLASS, SUBCLASS:
139, for adjustable mirrors and illumination means, and also see subclasses 141 and 142+.

130 This subclass is indented under subclass 127. Subject matter wherein the article permits one to lie and sleep.

SEE OR SEARCH CLASS:
5, Beds, appropriate subclass for bed details, per se.

131 This subclass is indented under subclass 127. Subject matter wherein the article is a device for supporting the weight of a person in a seated position.

SEE OR SEARCH CLASS:
297, Chairs and Seats, subclass 217.6 for an illumination means combined with a modified chair structure.

132 This subclass is indented under subclass 127. Subject matter wherein the article has structurally different means for supporting articles, e.g., table top and a standard with a bracket with a hook portion.

133 This subclass is indented under subclass 127. Subject matter wherein the article is an enclosure with article supporting means.

(1) Note. A recited "cabinet" will not be excluded from this subclass if the disclosure indicates that it is intended to hold articles other than light unit components.

(2) Note. A "cabinet" for this subclass does not include partial enclosures that have one side or top open permanently, i.e., a display rack that is closed on only three of four sides is classified above.

SEE OR SEARCH THIS CLASS, SUBCLASS:
136+, for portable vanity cases.
154+, for enclosures or containers of the portable type.

SEE OR SEARCH CLASS:
312, Supports: Cabinet Structure, appropriate subclasses for specific cabinet structure, and subclass 223.5 for cabinet structure combined with illumination means.

134 This subclass is indented under subclass 127. Subject matter wherein the article of furniture is a block-like mass with article supporting means or surface but without spacing legs, panels or pedestal.

135 This subclass is indented under the class definition. Subject matter combined with a smooth surface intended to form an image of an object other than a light source by reflection, not classified elsewhere.

SEE OR SEARCH THIS CLASS, SUBCLASS:
128+, above for articles of furniture combined with a mirror and illumination means.

SEE OR SEARCH CLASS:
353, Optics: Image Projectors, appropriate subclasses for image projection involving reflectors.
355, Photocopying, appropriate subclasses, image project-on printing involving reflectors.
359, Optics: Systems (Including Communication) and Elements, subclasses 838+ for image forming reflectors, per se.
399, Electrophotography, for illumination systems including light sources used in electrophotographic devices, specifically subclasses 177+ for exposure.

136 This subclass is indented under subclass 135. Subject matter combined with a small box for containing toilet articles.

(1) Note. This subclass includes portable collapsible or hand-carried cases as distinguished from the dressing table furniture type of subclass 128 above. This subclass also includes mirrored purses or bags.

SEE OR SEARCH THIS CLASS, SUBCLASS:
128+, for dressing table-type mirrored vanities without a carrying handle.
154+, for illuminated containers without a mirror.

SEE OR SEARCH CLASS:
132, Toilet, subclass 83 for a powder box and applicator with a mirror.

137 This subclass is indented under subclass 136. Subject matter combined with a device linked with a closure of said box to control the operation of a light source.

SEE OR SEARCH THIS CLASS, SUBCLASS:
94, for a heater or refrigerator door controlled switch.
155, for a container with a door or lid controlled switch.

138 This subclass is indented under subclass 135. Subject matter wherein the surface is structurally combined with a light source support which adapts the resultant combination for the inspection of inaccessible places and which usually includes a handle.

SEE OR SEARCH THIS CLASS, SUBCLASS:
109+, for an illuminator and hand-held implement.

SEE OR SEARCH CLASS:
351, Optics: Eye Examining, Vision Testing and Correcting, subclasses 221 and 243 for eye examining instruments with illumination means.
600, Surgery, subclass 300 for diagnostic instruments with illumination means.

139 This subclass is indented under subclass 138. Subject matter wherein the resultant combination has means allowing the adjustment of the various elements thereof.

140 This subclass is indented under subclass 135. Subject matter combined with (1) more than one light source or light source support, or (2) different types of devices that can change light.

SEE OR SEARCH THIS CLASS, SUBCLASS:
227+, for illumination with plural light sources.
257+, for a light source and a light modifier.

141 This subclass is indented under subclass 140. Subject matter wherein elements of the combination may be readily changed in position with respect to one another or to a stationary object as a unit.

142 This subclass is indented under subclass 135. Subject matter wherein elements of the combination may be readily changed in position with respect to one another or to a stationary object as a unit.

143 This subclass is indented under subclass 142. Subject matter wherein the surface element faces in a different or opposite direction than that of a light-directing element of an integral light-beam apparatus.

(1) Note. This subclass includes combination wherein the light rays emitted by the integral light-beam apparatus are not intended to strike the mirror surface either directly or indirectly, e.g., vehicle spot light with an integral rear view mirror facing in the opposite direction.

SEE OR SEARCH THIS CLASS, SUBCLASS:
459+, for illuminating means combined with a vehicle.

144 This subclass is indented under subclass 142. Subject matter wherein a combination of said surface and light source, support or modifier may be readily changed in position as a unit.

SEE OR SEARCH THIS CLASS, SUBCLASS:
269, for the combination of a light modifier and light source or support that is tiltable or rotatable as a unit.
504, and 523+, for the combination of a vehicle with operating means to move a pivoted lamp.
527, for a vehicle aperture with a retractable headlight.

145 This subclass is indented under the class definition. Subject matter wherein a light source support or light source is combined with a component of a constructed stationary body, not classified elsewhere.

(1) Note. In this subclass and those indented hereunder are placed patents whose claims all relate to the illuminating features to be applied to a body component and such combinations with modifications of the body merely for the promotion of illumination. If novelty is claimed in the body or component structure with which a source of light is combined, which novelty is independent of the illumination, the patent is classified with the other body.

(2) Note. In this subclass and those indented hereunder, support elements for a light source or unit which do not also function as supports for components of the stationary body or building are not considered body components for placement in this section. That is, structure which has no other purpose than that of supporting a light source is not considered a static structure component for this section.

(3) Note. Class 52, Static Structures (e.g., Buildings), takes building structure including features having functions in addition to merely supporting the illuminating means or forming the enclosure, barrier or other structure illuminated. In interpreting this line, the presence of a claim to building structure not including illuminating means is considered conclusive of the fact that such additional function features are present.

SEE OR SEARCH THIS CLASS, SUBCLASS:

100, for door knob and keyhole illuminators.

101, for illumination means combined with a liquid container.

SEE OR SEARCH CLASS:

52, Static Structures (e.g. Buildings), subclass 28 for the subject matter of that class combined with artificial illuminating means, and see the Search Class note there with respect to this class.

135, Tent, Canopy, Umbrella, or Cane, subclass 91 for tents with lighting means.

359, Optics: Systems (Including Communication) and Elements, subclasses 591+ for building interior illumination with outside light.

146 This subclass is indented under subclass 145. Subject matter wherein the component is part of a flight of stairs, its supporting framework, casing, baluster or railing.

147 This subclass is indented under subclass 145. Subject matter wherein the component is a vertical upright or overhead enclosing part of a room or building.

148 This subclass is indented under subclass 147. Subject matter comprising means forming a secondary horizontal barrier spaced below and coextensible with a ceiling and at least one light source supported relative to the secondary barrier or the ceiling such that light from the source is directed through or reflected from at least a portion of the secondary barrier.

149 This subclass is indented under subclass 148. Subject matter combined with means directing the flow of a liquid or gas.

150 This subclass is indented under subclass 148. Subject matter wherein at least one light source is supported by means supporting the secondary barrier.

151 This subclass is indented under subclass 145. Subject matter wherein the component is (1) a framed heading to conceal curtain tops or fixtures, or (2) a wall or ceiling molding.

152 This subclass is indented under subclass 145. Subject matter wherein the component is structure forming a border, fence, gate or awning.

SEE OR SEARCH THIS CLASS, SUBCLASS:

146, for interior fencing in the form of staircase posts and boards with illumination means.

SEE OR SEARCH CLASS:
135, Tent, Canopy, Umbrella, or Cane, subclass 91 for canopies, per se.
256, Fences, appropriate subclasses for fences, per se.
404, Road Structure, Process, or Apparatus, subclasses 6+ for constructed stationary bodies such as traffic guides, markers and curbs.

153 This subclass is indented under subclass 145. Subject matter wherein the component is a surface of a structure on which one travels.

SEE OR SEARCH THIS CLASS, SUBCLASS:
146, for staircase illuminators.
152, for borders or curbs with illumination means.

SEE OR SEARCH CLASS:
404, Road Structure, Process, or Apparatus, appropriate subclasses for road structure, per se.

153.1 Pavement:
This subclass is indented under subclass 145. Subject matter wherein the component is a paved surface on which vehicles travel, or on which vehicles are parked.

SEE OR SEARCH CLASS:
404, Road Structure, Process, or Apparatus, subclasses 9+ for lamp housings mounted in, or on, a paved surface wherein no electrical structure is claimed.

154 This subclass is indented under the class definition. Subject matter combined with a receptacle for diverse articles not classified elsewhere.

(1) Note. In this subclass and those indented thereunder are placed patents whose claims all relate to the illuminating features to be applied to a receptacle and such combinations with modifications of the receptacle merely for the promotion of illumination. If novelty is claimed in the receptacle with which a source of light is combined, which novelty is independent of the illumination, the patent is classified with the receptacle.

(2) Note. See the subclasses above for specific receptacles. Receptacles for illuminator elements, such as a casing for the batteries of a self powered light source, are not treated as receptacles for diverse articles for this section but rather are classified with the particular illumination feature.

SEE OR SEARCH THIS CLASS, SUBCLASS:
101, for a liquid container with illumination means.

SEE OR SEARCH CLASS:
206, Special Receptacle or Package, appropriate subclasses.

155 This subclass is indented under subclass 154. Subject matter combined with a circuit breaker linked with a closure for said receptacle to control the operation of a light source.

SEE OR SEARCH THIS CLASS, SUBCLASS:
94, for the combination of a heater or refrigerator, illumination means and a door controlled switch.
137, for a vanity case with a mirror and a closure controlled switch.

SEE OR SEARCH CLASS:
315, Electric Lamp and Discharge Devices: Systems, subclass 84 for a door or closure controlled load device of that class type.

156 This subclass is indented under subclass 154. Subject matter wherein the receptacle is of the type that is carried by a person on a trip.

157 This subclass is indented under the class definition. Subject matter comprising (1) a casing to support an energy source on or within the casing and a light source or a support for the light source powered by the energy source; or (2) a support to hold an energy source and a light source or a support for the light source powered by the energy source; or (3) a light modifier connected to a casing or support designed to support an energy source used to produce light wherein the modifier directs light from a light source powered by the energy source; or

(4) a battery and a light source totally supported by the battery; or (5) subcombinations and elements of, and accessories limited in use to, an integral self energized lamp which produces illumination for general lighting not provided for elsewhere.

(1) Note. A reservoir for a source of energy may or may not be claimed in patents before 1920. The total disclosure of patents prior to 1920 including such a reservoir for a gas, liquid or solid burner if meeting the requirements of this subclass will allow the placement of a patent in this subclass.

(2) Note. A gas, liquid or solid energy source, capable of chemically uniting with the oxygen of the air to produce primarily light and heat secondarily, a burner for the gas, liquid or solid energy source and an optical modifier of light generated by the energy source in the burner will be placed here when the energy source is contained integrally with the structure having the burner and the light modifier.

(3) Note. Electric energy sources such as primary and secondary batteries and electric generators are here when the source is integral with the light generator.

158 This subclass is indented under subclass 157. Subject matter wherein the casing encloses the energy source and the light source powered by the energy source and wherein the casing permits light emitted by the light source to exit through a portion of the casing which is light transmissive and wherein (1) the casing is sealed against liquid, gas or dust, or (2) an element or elements of the lamp are sealed against liquid, gas or dust, or (3) the lamp is encased in a covering which is transparent to the light emitted by the lamp, and which is sealed against liquid, gas or dust.

(1) Note. The lamp may be enclosed in a container which may be partially or totally transparent to the light emitted by the light source, or the lamp casing may be sealed by structure such as a covering, a coating of material or joints or the casing may be sealed as by a gasket. Further, a light element may be coated or potted to make the element fluid proof.

SEE OR SEARCH THIS CLASS, SUBCLASS:

21+, for lamps which open the electrical circuit to the light bulb in case of fracture of the light source envelope or enclosure.

164, for nonelectric miners safety lamps (Davey Lamp).

159 This subclass is indented under subclass 157. Subject matter wherein the light is generated by means other than means which converts energy associated with an electric current into visible radiant energy.

(1) Note. Structure which is a subcombination of a nonelectric light unit but specialized for use with such a light unit is placed here or in the subclasses indented hereunder.

SEE OR SEARCH THIS CLASS, SUBCLASS:

209, for plural nonelectric lamps not of the self-powered type.

228+, for plural lamps, one of which may be of the nonelectric, nonself-powered type.

266+, for nonelectric light source, not of the self-powered type combined with a light modifier.

382+, for light supports for or with a nonelectric light source of the nonself-powered type.

SEE OR SEARCH CLASS:

431, Combustion, subclasses 100+ for a mantle type illuminating burner and subclasses 298+ for a wick type liquid fuel burner. Also see the Search Class Note under the class definition of Class 431.

160 This subclass is indented under subclass 159. Subject matter having means for burning acetylene for the emission of light and means to modify the emitted light.

SEE OR SEARCH CLASS:
48, Gas: Heating and Illuminating, appropriate subclasses for gas generators.
239, Fluid Sprinkling, Spraying, and Diffusing, appropriate subclasses for a fluid distributor which may be disclosed as an illuminated burner.

161 This subclass is indented under subclass 159. Subject matter having a light unit comprising a wick or other capillary fuel conveying structure on which fuel burns, the wick being imbedded in a meltable solid fuel, e.g., wax, etc., which is meltable by the heat of the flame and is fed to the flame by the wick, or structure peculiarly adapted for supporting the solid fuel and a modifier.

SEE OR SEARCH THIS CLASS, SUBCLASS:
190, for imitation candles.

SEE OR SEARCH CLASS:
431, Combustion, subclasses 288+ for a candle or residual candle apparatus.

162 This subclass is indented under subclass 161. Subject matter having means to effect a reduction in size of the supporting structure from an operative condition to an inoperative condition.

163 This subclass is indented under subclass 161. Subject matter wherein the modifier is a single unit to encompass the candle and transmit light and having an opening at the top and bottom for the passage of air.

SEE OR SEARCH THIS CLASS, SUBCLASS:
312, for a chimney-type light modifier.

164 This subclass is indented under subclass 159. Subject matter having means to prevent a flame from igniting combustible gases which may surround the light unit.

(1) Note. The means for preventing ignition is usually a fine screen. These devices are not sealed type units.

SEE OR SEARCH THIS CLASS, SUBCLASS:
158, for sealed units, e.g., dust proof, water tight, etc.

165 This subclass is indented under subclass 164. Subject matter having means to prevent unauthorized access to the light source.

166 This subclass is indented under subclass 159. Subject matter having means to absorb a portion of the light ray energy and transmit the remainder or means to stop all light ray energy from being transmitted.

167 This subclass is indented under subclass 166. Subject matter having a refractor or transparent housing closure (i.e., "lens") and wherein the selective wavelength transmitting or light blocking means is movable between the light source and the lens.

168 This subclass is indented under subclass 167. Subject matter having more than one lens.

169 This subclass is indented under subclass 166. Subject matter having more than one refractor or transparent housing closure members through which light is transmitted.

170 This subclass is indented under subclass 169. Subject matter having means whereby a light unit body is revolved on a support.

(1) Note. The subject matter of this subclass type includes plural lenses generally of different colors so that by rotating the unit a change in color will be visible to one looking at the unit.

SEE OR SEARCH THIS CLASS, SUBCLASS:
168, for nonelectric lamps having plural lenses and separate selective wavelength transmitting or light blocking means movable between at least one of the lenses and the light source.

171 This subclass is indented under subclass 159. Subject matter wherein a portion of the products of combustion is led back to the flame or in which the air, or a portion thereof, for combustion is preheated by the combustion.

SEE OR SEARCH CLASS:
126, Stoves and Furnaces, subclass 79 for heating stoves that are provided with means for returning the gases or products of combustion from the smoke outlet to the combustion chamber of the stove.
431, Combustion, subclasses 104+ for a mantle-type burner in which the fuel is heated by the products of combustion, and subclass 215 for a burner in which the exhaust products heat the burner fuel.

172 This subclass is indented under subclass 171. Subject matter wherein the lamp's lower part is peculiarly structured.

(1) Note. Generally the structure of this subclass type relates to the tubes leading to the burner.

SEE OR SEARCH THIS CLASS, SUBCLASS:
181, for base structure, per se.

173 This subclass is indented under subclass 171. Subject matter wherein the lamp's upper part is peculiarly structured.

(1) Note. Subject matter of this subclass generally relates to the hood or dome structure which connects with the upper end of the tubes and which allow the escape of the products of combustion.

SEE OR SEARCH THIS CLASS, SUBCLASS:
182, for dome structure, per se.

174 This subclass is indented under subclass 171. Subject matter wherein a globe is movable with respect to its support structure for access to the burner.

175 This subclass is indented under subclass 174. Subject matter wherein the globe has one motion away from the support structure and another motion of rotation about a pivot.

176 This subclass is indented under subclass 174. Subject matter wherein the globe is moved in alternate directions in a straight line.

177 This subclass is indented under subclass 174. Subject matter wherein the globe is rotatably reciprocated about a fixed axis.

178 This subclass is indented under subclass 171. Subject matter wherein details of the tube construction is enumerated.

179 This subclass is indented under subclass 159. Subject matter having a lace-like hood or envelope of thin, porous refractory material which, when positioned in a flame, incandesces.

SEE OR SEARCH CLASS:
431, Combustion, subclasses 100+ for an incandescent mantle.

180 This subclass is indented under subclass 159. Subject matter having means to encompass a light source and transmit light and has an opening on the top and bottom for a draft.

SEE OR SEARCH THIS CLASS, SUBCLASS:
312, for chimney refraction, per se.

181 This subclass is indented under subclass 159. Subject matter wherein a light unit lower part is peculiarly structured.

SEE OR SEARCH THIS CLASS, SUBCLASS:
172, for base structure of a tubular-type light unit.

182 This subclass is indented under subclass 159. Subject matter wherein a light unit upper part is peculiarly structured.

183 This subclass is indented under subclass 157. Subject matter wherein the energy source is an electric battery enclosed within a casing and having a light source energizeable by the battery and electric connectors supported by the casing to permit electrical energy to be passed from outside the casing and electrical means external or internal of the casing connected to the connectors and to the battery or to the light source or support therefor, whereby electric power supplied to the electrical means (1) directly, or indirectly through the light source support, energizes the light source, or (2) recharges the battery when the light source or

light source support is electrically disconnected from the battery.

(1) Note. The battery in this subclass is a rechargeable or a regular dry cell battery.

(2) Note. The subcombination of a self-powered lamp which includes charging terminals to connect an external power source to the battery of self-powered lamp is placed here.

(3) Note. Here also are self-powered lamps with integral charging means.

184 This subclass is indented under subclass 157. Subject matter wherein there are one or more casings which support within the casing or casings an electrical battery or batteries and there are plural electrical filament bulb light sources supported on the casing or casings, or there are plural light bulb supports supported on the casing or casings.

185 This subclass is indented under subclass 184. Subject matter which includes a guard held by a casing to protect the bulbs or bulb sockets from damage and which permits light from the light bulb or light from a bulb when supported by the bulb support, to pass through.

SEE OR SEARCH THIS CLASS, SUBCLASS:

186, for wire guards protecting a bulb or bulb socket when combined with a flashlight casing.

186 This subclass is indented under subclass 157. Subject matter wherein the energy source is an electric battery supported on or within the casing, the light source is an electric filament light source and the light source support is for an electric filament light bulb and there is (1) a light transmissive member surrounding the filament light source or light source support to permit light, emitted from the source or a source supported by the support, to be transmitted through the member in at least one hundred and eighty degrees of angle in more than one plane, or (2) a protective member covering the light bulb or the light bulb support which permits light from the light bulb or from a light bulb when supported by the light bulb support to pass through the protective member.

187 This subclass is indented under subclass 157. Subject matter wherein there is at least one optical light modifier which receives light emitted by the light source and wherein the light source, the light source support or the optical modifier is adjustably mounted so that manual adjustment of the light source, light source support or the light modifier will cause a change in the light pattern formed by the light.

188 This subclass is indented under subclass 187. Subject matter wherein the light or the light source support is movable.

189 This subclass is indented under subclass 157. Subject matter wherein the casing encloses a battery and also holds an electric light source or support therefor or wherein there is a support to hold a battery and an electric light source or support therefor, and wherein (1) the arrangement of the battery, light source and/or light source support is designed not to be reused, or (2) the casing or support is formed in part of a material which is deformable.

(1) Note. The term "deformable" includes plastic, metal in the form of foil and cellulose material such as paper. Here, the casing or support may be extruded, cast or stamped or may be a wrapping, but the material of the casing or support is flexible.

(2) Note. If, as recited, the battery is integral with a bulb or a bulb socket or light modifier and the unit is a "throw-away," the claim is classifiable in the subclass. If, as recited, only the battery pack unit, as opposed to a battery or individual batteries which can be replaced, is replaceable and separable from the light bulb or bulb socket and the battery pack unit supports the lamp bulb or lamp bulb socket, the claim is classifiable in subclasses 194+.

190 This subclass is indented under subclass 157. Subject matter having means to position, by itself or in combination with some other disclosed means, a self-powered lamp with respect to some reference point or reference structure.

(1) Note. The "reference point" or "reference structure" of this subclass type need not be included in or part of the claimed combination. For example, a "reference point" of this subclass type may be on or included in structure fixedly positioned with respect to the earth's surface, such as a table or floor, from which reference point the self-powered lamp is positioned at least in part by the means of this subclass type, as for example, a base.

191 This subclass is indented under subclass 190. Subject matter combined with or having means to attach the support to the reference structure.

(1) Note. For the definition of "reference structure" see the search this class, subclass note below.

(2) Note. The reference structure may be an animate or inanimate support. The "means to attach the support" of this subclass includes: handles, bails, clamps, hooks, hangers, straps, magnets and suction cups.

SEE OR SEARCH THIS CLASS, SUBCLASS:

103+, for a lamp held by a piece of wearing apparel or a body support.

190, (1) Note for the definition of "reference structure" as used in this subclass (191).

249+, for a support holding plural light sources.

269, for a light source or light support with a light modifier held on a rotatable or tiltable support.

285, for a light source or support with a light modifier held on an adjustable or repositional support.

382+, for a light support, per se, particularly subclass 382 for a strap support, subclasses 396+ for a clamp or hood support, subclass 398 for a magnetic support, and subclasses 399+ for a handle or bail support.

192 This subclass is indented under subclass 157. Subject matter wherein the energy source is a means which converts mechanical energy into electrical energy.

193 This subclass is indented under subclass 192. Subject matter wherein the mechanical energy is imparted to the generator by a moving member which frictionally engages a movable part of the generator.

194 This subclass is indented under subclass 157. Subject matter comprising an electric voltaic energy source, and an electric light source or support therefor totally supported by the voltaic energy source.

195 This subclass is indented under subclass 194. Subject matter wherein the voltaic energy source has electrical connectors attached to the voltaic energy source to deliver the energy of the source externally of the source to the light source or light source support and the light source or light source support is totally supported by one or more of the connectors.

196 This subclass is indented under subclass 157. Subject matter wherein the casing is composed of two similar parts which together form the flashlight casing.

197 This subclass is indented under subclass 157. Subject matter wherein an electric light source or support therefor and the casing each has an axis, and the axis of the light source or light source support is permanently at an angle to the axis of the casing, or the axis of the light source or light source support is adjustable relative to the axis of the casing.

(1) Note. An arrangement of a light source or light source support having an axis and a casing having an axis parallel to the axis of the light source or light source support is excluded from this subclass.

(2) Note. Subject matter of this subclass type includes, for example, "elbow flashlights."

SEE OR SEARCH THIS CLASS, SUBCLASS:

191, for a flashlight casing or an end with a support for holding the casing or cap.

200+, for flashlights which have a casing having at least two major sides parallel to each other and the light source or light source support and battery are supported by the casing.

202, for cylindrical flashlights whose casing supports a lamp bulb or a lamp support and encloses a battery.

198 This subclass is indented under subclass 197. Subject matter wherein the light source or light source support is connected to the casing by a means which is movable to permit the light source or light source support to be moved to various locations consistent with the length of the means or by an electric cord of such length to permit the light source or light source support to be moved to various locations consistent with the length of the cord.

(1) Note. The means of this subclass type may be, for example, telescopic, flexible, and sectional pivoted members.

199 This subclass is indented under subclass 197. Subject matter wherein the light source or light source support is mounted upon the casing so that the light source or light source support is turnable about a point.

200 This subclass is indented under subclass 157. Subject matter wherein the casing encloses an electric battery and includes at least two planar surfaces parallel to each other and supports an electrical filament lamp bulb.

201 This subclass is indented under subclass 200. Subject matter wherein the lamp bulb includes an electric contact and the battery has an electrical contact and the contact of the bulb always physically touches the contact of the battery to pass an electrical current through the contacts from the battery to the filament.

202 This subclass is indented under subclass 157. Subject matter comprising casings for electrically self-powered lamp wherein the casing is an elongated hollow member having a generally circular cross-section.

203 This subclass is indented under subclass 202. Subject matter having a battery of the primary type with electrical terminals and an electrical light source or support therefor having electrical terminals and a device to move a terminal of the light source or light source support into or away from the contact with a terminal of the battery.

204 This subclass is indented under subclass 202. Subject matter having a battery of the primary type and a casing which is a nonconductor of electricity and a first conductor supported by the casing and a second conductor separated electrically from the first conductor and also supported by the casing and an electrical current make and break device electrically connecting the first and second conductors to selectively pass current between the battery and an electric light source or support therefor.

205 This subclass is indented under subclass 202. Subject matter having a primary battery with electrical terminals and an electric light source having terminals or an electric light source support having at least one electrical terminal contactable with one or more terminals of the light source and a manually operated electrical current make or break device electrically connecting or disconnecting one of the terminals of the battery with a terminal of the light source or light source support.

206 This subclass is indented under subclass 205. Subject matter wherein the cylinder has two ends and the electrical light source or the support therefor is located at one end of the cylinder and the switch is located at the other end of the cylinder.

207 This subclass is indented under subclass 157. Subject matter comprising an attachment to the self-energized lamp to hold and extra electrical filament type (lamp bulb) light source, which attachment is supported on or within an electrical self-energized lamp or on a subcombination thereof.

(1) Note. The spare electrical bulb may be supported on the end cap of the flashlight, on the spring, between an end cap and the battery or batteries, which forms part of the electrical circuit between the

battery or batteries and the lamp bulb, on the reflector of a flashlight or on any member forming part of the flashlight.

208 This subclass is indented under subclass 157. Subject matter wherein the subcombinations or elements of self energized lamps include parts and arrangements of parts necessary to form a complete electric flashlight but not in themselves forming a complete flashlight and and adjuncts to complete electric flashlights which permit a flashlight to function as a light source in a manner different from the normal use of a flashlight itself.

209 This subclass is indented under the class definition. Subject matter wherein there are two or more spatially separate light sources and wherein at least two of the sources are comprised of light emitting means other than means which converts energy associated with an electric current into visible radiant energy and means to modify the light therefrom.

SEE OR SEARCH THIS CLASS, SUBCLASS:

228+, for plural light sources, one of which may be nonelectric.

266, for a nonelectric light source (or support therefor) combined with a light modifier.

SEE OR SEARCH CLASS:

431, Combustion, for nonelectric light sources, per se.

210 This subclass is indented under the class definition. Subject matter wherein there are two or more spatially separate light sources at least two of which include an electrode containing carbon which is consumed during the operation of the device and means to modify the light therefrom.

SEE OR SEARCH THIS CLASS, SUBCLASS:

209+, for a carbon arc-type light source and means to modify the light therefrom.

228, for plural light source, one of which may be of the carbon arc type.

211 This subclass is indented under the class definition. Subject matter comprising combinations of two or more selectively energizeable filament type light sources in a common envelope and a modifier.

SEE OR SEARCH THIS CLASS, SUBCLASS:

227+, for two or more selectively energizeable filament type light sources each in its own envelope.

212 This subclass is indented under subclass 211. Subject matter provided with means to actuate the various filaments, either singularly or simultaneously.

213 This subclass is indented under subclass 211. Subject matter wherein means are provided for permitting the modifier and light source to be moved relative to each other to vary the distribution of light.

214 This subclass is indented under subclass 211. Subject matter provided with means to absorb, or randomly scatter some or all of the light from at least one of the filaments.

(1) Note. Subject matter of this subclass type includes, for example, translucent screens.

SEE OR SEARCH THIS CLASS, SUBCLASS:

215, for corrugated, faceted or fluted reflectors or lenses combined with multiple filament light sources.

215 This subclass is indented under subclass 211. Devices wherein the light modifier has a complex modifying surface comprised of a plurality of angularly related planes or plurality of surfaces of revolution.

216 This subclass is indented under the class definition. Subject matter comprising a source of light which, as recited in the claims, is virtually a curved line.

(1) Note. Included in the subject matter of this subclass is, for example, a light source comprised of a continuous fluorescent surface of revolution generated about a nonlinear axis since the rays of light emitted by such a light source, if extended inwardly, all meet on the nonlinear axis which thus constitutes the vir-

tual curved line light source of this subclass type.

(2) Note. The light source of this subclass type are either recited as being curvilinear or as in combination with means whose recited structure and function necessarily recognize the curvilinearity of the light source. Thus, a filament type light source is not necessarily classifiable here even though the filament may be disclosed as being curved.

217 This subclass is indented under the class definition. Subject matter comprising (a) a light source (see, Glossary: "Light Source") which is virtually a straight line, at least in part, or having a dimension substantially greater in one direction than any in a plane transverse to said direction, and a light modifier (see, Glossary: "Light Modifier") structurally related to the light source so as to modify light therefrom, or (b) a support for such a light source with or without a light modifier.

(1) Note. Light sources of the type provided for in this subclass and the subclasses indented hereunder are usually recited as "tubular", "elongated", "linear", "cylindrical", and "extended". In all other cases, the elongated nature of the light source must be implied by the claims themselves or necessarily imputed from the claimed disclosure in order to render the claimed combination structurally complete and operative for the functions referred to in the claim. For example: "means to support a pair of fluorescent lamps" is sufficient basis for placement in this subclass or the subclasses indented hereunder even though fluorescent lamps are often elongated since the word "fluorescent" itself does not imply length. On the other hand, "means to support a pair of lamps parallel to each other" is sufficient basis for placement in this subclass or the subclasses indented hereunder since the word "parallel" implies that the lamps have length.

SEE OR SEARCH THIS CLASS, SUBCLASS:

260, "fluorescent type", for combination of a fluorescent light source or support therefor and a modifier wherein the source is not an elongated type.

218 This subclass is indented under subclass 217. Subject matter having means to remove heat generated by the light from some part of the claimed combination.

SEE OR SEARCH THIS CLASS, SUBCLASS:

96, for fluent material means for conveying thermal energy generated by means other than the light source from one point to another.

219 This subclass is indented under subclass 217. Subject matter having means to structurally interconnect two or more elongated source light units or supports such that the long dimension of the respective light sources extend along the same line.

220 This subclass is indented under subclass 217. Subject matter having at least one supporting means for an elongated light source which supporting means is so structurally related to some other part of the claimed combination as to permit the support to be moved from one position to another relative to the other part of the combination.

(1) Note. Included in the subject matter of this subclass are light source supports comprising two or more spatially separated means for supporting the same light source, one of which is movable relative to the other to accommodate light sources of different lengths.

221 This subclass is indented under subclass 217. Subject matter having means structurally relating (as by housing or supporting) a circuit element other than the light source or its terminal connectors to the light source, its support or the light modifier.

(1) Note. The circuit elements of this subclass type do not include mere electrical connection means such as wiring, terminals, or connectors. Switches, however, are included.

222 This subclass is indented under subclass 221. Subject matter in which the claimed combination includes an element made in whole or in part of a light pervious material.

(1) Note. The element may be a light modifier or, for example, a part of the light housing.

223 This subclass is indented under subclass 217. Subject matter in which the claimed combination includes an element made in whole or in part of a light pervious material.

(1) Note. The element may be a light modifier or, for example, a part of the light housing.

224 This subclass is indented under subclass 223. Subject matter having two or more elements made in whole or in part of a light pervious material.

225 This subclass is indented under subclass 217. Subject matter having two or more elongated light sources or supports for two or more elongated light sources.

227 This subclass is indented under the class definition. Subject matter including more than one source of light (see, Glossary: "Light Source").

(1) Note. For inclusion here and in the indented subclasses the sources must be claimed.

SEE OR SEARCH THIS CLASS, SUBCLASS:

33, for plural sources arranged to provide a condensed and shadowless illumination for a work area.

209, for plural nonelectric light sources.

210, for plural carbon arc-type light sources.

211, for a multiple filament source in a light unit.

217+, for plural elongated light sources in a light unit.

SEE OR SEARCH CLASS:

399, Electrophotography, for illumination systems including light sources used in electrophotographic devices, specifically subclasses 177+ for exposure.

228 This subclass is indented under subclass 227. Subject matter wherein at least one of the light sources consists of a light emitting heated or ionized solid or gas of one type and at least one other light source consists of a light emitting heated or ionized solid or gas of another type.

(1) Note. Examples of types of diverse light generators provided for in this subclass and the subclasses indented hereunder include any two of the following: electrically (resistively) heated carbon filament, electrically (resistively) heated tungsten filament, electrically ionized neon, hot gaseous products of combustion (flame), partially ionized (irradiated) phosphor coating (fluorescent tube).

229 This subclass is indented under subclass 228. Subject matter wherein at least one light source is the flame of a burning gas and at least one other is an electrical generator of visible radiation.

SEE OR SEARCH THIS CLASS, SUBCLASS:

457, for fittings used in combined gas and electric fixtures.

230 This subclass is indented under subclass 227. Subject matter wherein at least one of the light sources emits light of specified wavelength or spectral distribution or wherein at least one modifier affects light of at least one wavelength differently from light of at least one other wavelength.

231 This subclass is indented under subclass 230. Subject matter having at least one source of light emitting light having a spectral distribution different from the light emitted by at least one other source, or having at least two modifiers each of which affects light of one selected wavelength differently from light of another wavelength, the selected wavelengths of the two modifiers being different.

SEE OR SEARCH THIS CLASS, SUBCLASS:
1+, for subject matter for producing particular wavelengths for the purpose of simulating daylight.

232 This subclass is indented under subclass 227. Subject matter wherein means are provided for moving, or adjusting the position of a source relative to its modifier.

SEE OR SEARCH THIS CLASS, SUBCLASS:
277+, for adjustable or repositionable modifier not claimed in combination with plural sources.
285+, for an adjustable light source.
319+, for an adjustable or positionable light modifier.

233 This subclass is indented under subclass 227. Subject matter wherein means are provided which permit at least one of the light sources or its modifier to be moved by or under the control of a human operator situated beyond reach of the light source or modifier.

234 This subclass is indented under subclass 227. Subject matter in combination with features other than light modifying elements, light support structure, or electrical connection means, and not provided for in preceding subclasses.

SEE OR SEARCH THIS CLASS, SUBCLASS:
253, for combined subject matter wherein plural light sources are not claimed.

SEE OR SEARCH CLASS:
206, Special Receptacle or Package, subclasses 216+ for the combination of a lamp assemblage, or package or a lamp with disparate means. Note, "Assemblage" and "Package" concepts are stated in Class 206.

235 This subclass is indented under subclass 227. Subject matter including means to alter the distribution or composition of incident light from at least one light source, by changing its direction or by the absorption of some or all its energy.

SEE OR SEARCH THIS CLASS, SUBCLASS:
19, for light polarizers.
230, for similar subject matter wherein the particular wavelength is claimed.
257, for a light modifier combined with a light source (or support therefor).
317, for a light modifier, per se.

236 This subclass is indented under subclass 235. Subject matter wherein each of at least two light sources is associated with a modifier which does not receive light directly from the other source or sources.

SEE OR SEARCH THIS CLASS, SUBCLASS:
257+, for a light source or support therefor and modifier.

237 This subclass is indented under subclass 236. Subject matter wherein the light modifiers in the light units are substantially duplicates or mirror images of one another.

238 This subclass is indented under subclass 237. Subject matter including means to spatially locate plural units with respect to each other or with respect to a common support.

(1) Note. The positioning means frequently includes a conduit for the electrical supply.

239 This subclass is indented under subclass 238. Subject matter wherein the positioning means also constitutes or provides means enabling the plural units to be adjusted relative to each other.

SEE OR SEARCH THIS CLASS, SUBCLASS:
233, for remote adjustment or positioning means.

240 This subclass is indented under subclass 237. Subject matter including means to enclose two or more light units.

(1) Note. A housing provides a window for the ingress and egress of light, which may have a transparent or translucent cover, and often has ventilation open-

ings, but otherwise totally encloses the light units.

241 This subclass is indented under subclass 237. Subject matter wherein the modifiers each have a surface which redirects the light back into the medium from which it came.

242 This subclass is indented under subclass 236. Subject matter wherein a modifier associated with a light source is of a different type than the modifier associated with another light source.

(1) Note. Examples of different types of light modifiers are light reflectors, light concentrating refractors, light diffusing refractors, light filters, and light blocking shields.

243 This subclass is indented under subclass 242. Subject matter wherein one of the light modifiers has a surface which redirects the light back into the medium from which it came.

244 This subclass is indented under subclass 236. Subject matter wherein a modifier includes means having a pair of surfaces which causes light passing through to bend, and thus emerge from the means at an angle different from which it entered.

SEE OR SEARCH THIS CLASS, SUBCLASS:
246, for refractors which scatter light.
326, for refractors, per se.

245 This subclass is indented under subclass 244. Subject matter including means which redirects light back into the medium from which it came in addition to a refraction type modifier.

(1) Note. The reflector may be part of the same light unit having a refractor, or may be part of a distinct light unit.

SEE OR SEARCH THIS CLASS, SUBCLASS:
327, for a light modifier, per se, comprising a refractor with a reflector.

246 This subclass is indented under subclass 244. Subject matter wherein the refractor randomly scatters the emergent light.

247 This subclass is indented under subclass 236. Subject matter wherein a modifier includes means to redirect light back into the medium from which it came.

SEE OR SEARCH THIS CLASS, SUBCLASS:
341, for a reflector modifier, per se.

248 This subclass is indented under subclass 236. Subject matter including means to block or absorb light rays from a source.

(1) Note. A "shade" which reflects light is a reflector.

SEE OR SEARCH THIS CLASS, SUBCLASS:
351, for shielding type modifiers, per se.

249 This subclass is indented under subclass 227. Subject matter including means to spatially position a light source relative to some reference point or structure.

SEE OR SEARCH THIS CLASS, SUBCLASS:
382+, for supports for plural light sources, per se.

250 This subclass is indented under subclass 249. Subject matter wherein the support includes means to vary the position of the light source or sources relative to the reference point or structure.

SEE OR SEARCH THIS CLASS, SUBCLASS:
233, for remote adjustment means.

251 This subclass is indented under subclass 249. Subject matter including electrical means to control the electrical current to a light source.

SEE OR SEARCH CLASS:
200, Electricity: Circuit Makers and Breakers, for switch structure, per se.

252 This subclass is indented under subclass 249. Subject matter wherein the light sources are supported in a specific spatial relationship.

(1) Note. The arrangement of the sources is often designed to suggest some other object, such as a star of flag.

SEE OR SEARCH THIS CLASS, SUBCLASS:
392, for an imitation candle support, per se.
416, for a harp or font.

253 This subclass is indented under the class definition. Subject matter comprising combinations not elsewhere provided for of basic subject matter of the class, including subcombinations thereof, with additional means whose proximate function in the combination does not contribute to the efficacy (i.e., intended proximate function) of the class type subject matter.

(1) Note. This subclass constitutes the residual locus for the combination of illuminating means with the object being illuminated. For example, the combinations of a light source and a modifier bearing locomotive identification numbers is classified here since, even though the modifier is class type subject matter, the function of the indicia is, primarily, to express information about the locomotive and only secondarily to modify the light from the source by altering its distribution. Mere combinations however of light sources and colored lenses, for example, to be used as signaling means are not classified here since such combinations only constitute basic subject matter of the class. Also, combinations of illuminating means and signalling means which conveys information about the illuminating means are not classified here since the proximate function for the signaling means (i.e., to convey information) contributes to the efficacy of the illuminating means.

SEE OR SEARCH CLASS:
40, Card, Picture, or Sign Exhibiting, subclasses 204+ for illuminated license plates, various subclasses under 427+ and 446+ for illuminated display devices, subclass 540 for illuminated dummies, subclasses 541+ for illuminated signs, particular subclass 556 for vehicle light, and subclass 557 for streetlights with signs.

254 This subclass is indented under the class definition. Subject matter having at least two light supports which are movable with respect to an energy source or one light bulb with plural energy source contacts which is movable with respect to an energy source.

(1) Note. The light support or light bulb are moved because one or the other has failed.

SEE OR SEARCH THIS CLASS, SUBCLASS:
20, for a light source substitution done automatically.

SEE OR SEARCH CLASS:
313, Electric Lamp and Discharge Devices, subclass 236 for electric lamps, per se, which are provided with a spare electrode to replace a defective electrode, subclass 237 for electric lamps, per se, which are provided with means to replace a defective electrode or which are readily demountable so as to be easily repaired, and subclasses 272 and 316 for plural filament incandescent lamps.
315, Electric Lamp and Discharge Devices: Systems, subclass 87 and 88, and indented subclasses for electric lamp and electric space discharge device systems provided with means to substitute another lamp or electric space discharge device for the operating lamp or discharge device if the operating lamp or discharge device fails to operate properly. Class 362 provides for such subject matter when the protector, support, or light distributor is claimed.
340, Communications: Electrical, subclasses 500+ for means automatically responsive to a condition and search class for other classes with related art.

255 This subclass is indented under the class definition. Subject matter consisting of a light modifier having or combined with means cooperable with a light source envelope base (see,

Glossary: "Light Source") to fixedly position the modifier relative thereto.

(1) Note. The cooperable means may, for example, grip or press against the envelope or press the modifier against the envelope with sufficient force that the friction between the contacting surfaces prevent one surface from moving relative to the other under normal operating conditions.

256 This subclass is indented under subclass 255. Subject matter combined with one or more light modifiers not mounted on the light source envelope.

257 This subclass is indented under the class definition. Subject matter comprised of a light source (see, Glossary: "Light Source") or support therefor and a modifier (see, Glossary: "Light Modifier") structurally related to the light source so as to modify light therefrom.

(1) Note. Nominal recitations of a light unit (e.g., "light unit", "headlight", "lamp") generally imply only a source of light and are insufficient basis for placement in this subclass and the subclasses indented hereunder unless a light source and a light modifier must be imputed from the claimed disclosure to render the claimed combination structurally complete and operative for the functions referred to in the claim.

(2) Note. Light sources having light modifying envelopes are not classifiable, per se, in this class (362). (For the loci of such subject matter, see the Search Class Notes below). However, combinations of such light sources with additional modifying means are classifiable in this subclass and the subclasses indented hereunder.

SEE OR SEARCH THIS CLASS, SUBCLASS:

317+, for combinations of a modifier and a light source which may be spatially related but are not related by the structure of the claimed combination.

SEE OR SEARCH CLASS:

313, Electric Lamp and Discharge Devices, subclasses 110+ for light sources having light modifying envelopes, per se.

399, Electrophotography, for illumination systems including light sources used in electrophotographic devices, specifically subclasses 177+ for exposure.

258 This subclass is indented under subclass 257. Subject matter which includes an electric light source lamp or support therefor; a flexible extensible electric cord connected to the light source or light source support to deliver electric energy to the lamp and a cord storage device to hold the cord when not in use or to retain the excess portion of cord that is not needed at the moment; the cord being of such length as to permit the light source to be used as a portable light at varying distances from an electrical power source up to the limit of the length of the cord.

(1) Note. The line between Class 191, Electricity: Transmission to Vehicles, Class 362, Illumination, and Class 242, Winding, Tensioning, or Guiding is as follows: A claim including an in name only lamp combined with a flexible extension cord to deliver electrical energy to the lamp and a cord storage device to store the cord is in Class 191, subclasses 12+. Class 362 will take a claim to illumination structure beyond a nominal recitation of a lamp, or light unit. Class 242 which is generic to winding and reeling of indefinite length material will not take a claim restricted to use with electrical conductors, which transmit electrical energy.

259 This subclass is indented under subclass 257. Subject matter wherein the light source is a molecular or atomic oscillator having an optical resonator which produces a narrow, intense beam of coherent, visible light.

SEE OR SEARCH CLASS:

372, Coherent Light Generators, appropriate subclasses for laser type light sources, per se.

260 This subclass is indented under subclass 257. Subject matter wherein the source of light is a solid or liquid material which emits visible light when irradiated by invisible radiation.

SEE OR SEARCH THIS CLASS, SUBCLASS:

84, for a luminescent material combined with a source (or support therefor) of visible light.

217+, for an illuminating device having an elongated fluorescent type light source or having supports for such a light source.

263+, for light sources comprised of a gas or vapor which emits visible light when ionized by invisible radiant energy.

SEE OR SEARCH CLASS:

313, Electric Lamp and Discharge Devices, particularly subclasses 483+ for fluorescent light sources, per se.

261 This subclass is indented under subclass 257. Subject matter wherein the light source has an electrode containing carbon which is consumed during the operation of the device.

SEE OR SEARCH CLASS:

314, Electric Lamp and Discharge Devices: Consumable Electrodes, appropriate subclasses for consumable electrode and the electric systems therefor. Also, see notes to other classes that utilize consumable electrodes.

262 This subclass is indented under subclass 261. Subject matter having means to feed the electrode by gravity or positive means to move the electrode.

263 This subclass is indented under subclass 257. Subject matter wherein the light source consists of a gas or vapor containing ionized or partially ionized molecules or atoms which, in changing their ionization states from nonionized to ionized or vice versa or from one ionization level to another, emit visible radiant energy.

(1) Note. The subject matter of this subclass and the subclasses indented hereunder includes, for example, gas or vapor discharge-type light sources and "glow" tubes which are virtually point sources of light.

SEE OR SEARCH THIS CLASS, SUBCLASS:

216, for an ionized gas or vapor light source which is or includes a virtually curved line segment.

217+, for an ionized gas or vapor light source which is or includes a virtually straight line segment.

260, for a fluorescent light source which emits visible light in response to incident invisible radiation emitted from an ionized gas or vapor discharge.

264 This subclass is indented under subclass 263. Subject matter having means for raising or lowering the temperature of the light source, light source support or light modifier.

265 This subclass is indented under subclass 263. Subject matter having operatively associated therewith an inductive, capacitive or resistive circuit element.

266 This subclass is indented under subclass 257. Subject matter wherein the light is generated by means other than means which converts energy associated with an electric current into visible radiant energy.

SEE OR SEARCH THIS CLASS, SUBCLASS:

312+, for a nonelectric light source having a light pervious chimney.

382+, for supports for or with nonelectric light sources, particularly subclass 409 for ceiling-suspended supports and subclass 415 for standard-type supports.

267 This subclass is indented under subclass 257. Subject matter having a means (e.g., gasket) filling the space between two adjacent elements to prevent matter on one side of the elements from passing between them to the other side or having a gas other than air in contact, at least in part, with the source, support therefor, or modifier.

(1) Note. Mere recitation of a "sealed" light source (or support therefor) and modifier (e.g., "sealed-beam head lamp") is insufficient basis for classification in this subclass if the sealing means itself is not recited.

SEE OR SEARCH THIS CLASS, SUBCLASS:

306, for resilient means to force a source or modifier element into engagement with another adjacent element without a sealing means between the two elements.

310, for housing means for a light source or light source support and modifier without a sealing means between two adjacent parts.

268 This subclass is indented under subclass 257. Subject matter including a plurality of lens elements or lens components for concentrating or spreading a light beam.

(1) Note. The term "component" as applied to a lens designates either a single transparent mass of refractive material having two opposed refracting surfaces or a grouped plurality of such masses arranged in series along the optical axis of the lens with their adjacent refracting surfaces either in full over all contact or in spaced parallel relation with the spacing being of such small magnitude that it does not enter into the lens computations; the two refracting surfaces of the single mass and the two axially extreme refracting surfaces of the plurality of masses having at least a portion thereof axially air-spaced from all other adjacent refracting surfaces that may be present in the lens. The axial dimension of the air-spacing between either the opposed surfaces of the single mass or the axially extreme surfaces of the grouped plurality of masses and the other adjacent refracting surfaces that may be present in the lens must be of sufficient magnitude to enter into the lens computations in order to limit the axial extent of the lens component.

(2) Note. The term "element" as applied to a lens designates any single transparent mass of refractive material having two opposed refracting surfaces which surfaces are disposed transversely of the optical axis of the lens and spaced there along; i.e., any one of the masses in the above component definition regardless of its spacing from adjacent refracting surfaces that may be present in the lens.

SEE OR SEARCH CLASS:

359, Optics: Systems (Including Communication) and Elements, subclasses 642+ for lenses, per se, and the appropriate subclasses.

269 This subclass is indented under subclass 257. Subject matter wherein the light source (or support therefor) and modifier are structurally related by a common support having means to permit the light source (or support therefor) and modifier to assume two different positions about an axis without moving with respect to each other.

(1) Note. The recitation of a "sealed-beam headlight" is considered a nominal recitation of a light source and the combination of a "sealed beam headlight" and a tiltable or rotatable supporting means is therefore not classified in this subclass or the subclasses indented hereunder if no light modifier is recited in the combination. Such combinations are classified elsewhere and cross-referenced to this subclass or the subclasses indented hereunder.

(2) Note. Light units which are held in one position by resilient means are not classifiable in this subclass or the subclasses indented hereunder merely because an outside force acting against the resilient means can rotate or tilt the unit temporarily to a second position. The second position is not considered "assumed" since it lasts only as long as the outside force is applied.

SEE OR SEARCH THIS CLASS, SUBCLASS:

66, for a pivoted lamp or lamp support combined with vehicle structure, e.g., fender.

306, for a light source or modifier held in place by resilient means and having no means recited to vary the position of the light source or modifier.

365+, for means to mount a tiltable or rotatable lamp housing (e.g., a "sealed beam" unit) in a recess in, for example, unclaimed vehicle structure.

270 This subclass is indented under subclass 269. Subject matter wherein means are provided to permit and guide movement of the light source (or support therefor) and modifier in a straight line with respect to the common support without moving relative to each other.

271 This subclass is indented under subclass 269. Subject matter having means to move the unit relative to its support.

272 This subclass is indented under subclass 271. Subject matter wherein the actuator converts the potential energy of a voltage or pressure differential into a force which moves the unit.

273 This subclass is indented under subclass 271. Subject matter wherein the light unit is structurally related to its support by a relatively rotatable helix-shaped member such that rotation of the member about the axis of the helix produces movement of the unit in the direction of the axis of the helix.

274 This subclass is indented under subclass 271. Subject matter wherein the unit is structurally related to its support by a yieldable means in such a way that relative movement between the unit and its support results in deformation of the yieldable means.

275 This subclass is indented under subclass 269. Subject matter wherein the unit is rotatable with respect to its support about two or more axes.

(1) Note. Light units mounted for universal movement are classifiable here, such means may include resilient positioning means urging the unit in one direction against a stop which prohibits movement in that direction but still allows tilting or rotating of the unit caused by, for example, a movement acting on the unit.

276 This subclass is indented under subclass 257. Subject matter with or including means which continuously senses a variable incident force or energy field and which varies or maintains the distribution, composition or intensity of light from the source or modifier in response to changes in the sensed force or energy.

(1) Note. The sensing means of this subclass may respond, for example, to relative changes in direction of the force or gravity, changes in gas pressure, changes in incident radiant energy or changes in thermal energy.

(2) Note. The condition responsive means of this subclass type may vary the distribution composition or intensity of light continuously with changes in the sensed force or energy or abruptly at some level of sensed force or energy.

SEE OR SEARCH THIS CLASS, SUBCLASS:

384, for a light source or light source support, per se, movable by a gravity responsive pivoted weight.

SEE OR SEARCH CLASS:

160, Flexible or Portable Closure, Partition, or Panel, subclasses 1+ for automatically controlled flexible closures and partitions of general utility.

250, Radiant Energy, subclasses 200+ for photocell electric circuits and photocell apparatus. Indented subclass 205 includes those photocells which control a shutter in the light path between light source and photocell; subclasses 552+ include a photocell means which detects a light emitting source wherein the source is solid state.

315, Electric Lamp and Discharge Devices: Systems, subclasses 82+ and 149+ for photoelectrically controlled electric lamp circuits (e.g., shifting from "bright" to "dim" filament).

340, Communications: Electrical, appropriate subclasses for condition responsive lamps which convey information about the condition sensed.

277 This subclass is indented under subclass 257. Subject matter wherein means is provided for structurally relating the modifier to the light source, light source support or some other part of the claimed combination in two or more positions of the illuminated surface of the modifier or from an illuminated position to an unilluminated position.

278 This subclass is indented under subclass 277. Subject matter wherein the modifier is made of a deformable material and is adjusted or repositioned by deformation.

279 This subclass is indented under subclass 277. Subject matter wherein the modifier includes at least two spaced adjacent modifying means each having at least two plane or curved surfaces of the type generated by a straight or curved line (the "generatrix"); the means being so arranged relative to each other and to the light source that (a) no two of the surfaces are generated by an extension of the same generatrix, (b) one of the surfaces of one means faces one of the surfaces of the adjacent means, (c) one of the surfaces of each means is exposed to light from the light source, and (d) light from the source is able to pass both surfaces of each means and at least one of the surfaces in a direction parallel or tangent to its generatrix, the means movable relative to the light source but fixed relative to each other.

(1) Note. A "grid" for purposes of classification in this subclass consists of at least two intersecting pairs of louvers.

(2) Note. The two spaced adjacent means of this subclass may be part of the same element, as for example, a spiral louver.

280 This subclass is indented under subclass 277. Subject matter wherein the illuminated surface of the modifier is planar or a surface of revolution generated by the rotation of a straight or curved line generatrix about an axis and (a) if planar, the modifier is movable such that the illuminated surface moves only in its own plane, or (b) if curved, the modifier is movable such that the illuminated surface is rotated about the axis of its generatrix.

281 This subclass is indented under subclass 280. Subject matter having two or more adjustable or repositionable modifiers each with a modifying surface movable in its own plane or extension, the modifiers being movable relative to each other.

(1) Note. Classifiable in this subclass is, for example, the combination of a light source and an iris type shutter.

282 This subclass is indented under subclass 277. Subject matter wherein the modifier is movable between two or more positions by rotation about at least one axis.

(1) Note. If claimed combinations classifiable here includes modifiers which are disclosed as being adjustable or repositionable in the plane or extension of the modifying surface, such combinations are placed as originals in subclasses 280 or 281, contrary to normal classification procedure, in order to avoid proliferation of cross-reference copies.

283 This subclass is indented under subclass 282. Subject matter having two or more adjustable or repositionable modifiers at least one of which is angularly adjustable or repositionable, the modifiers being movable relative to each other.

284 This subclass is indented under subclass 282. Subject matter having means movable with respect to the modifier and so structurally related thereto that movement of the means relative to the modifier moves the modifier relative to the light source or light source support.

285 This subclass is indented under subclass 257. Subject matter wherein the light source or light source support is movable between at least two positions relative to some other part of the claimed combination.

286 This subclass is indented under subclass 285. Subject matter having means to establish an electromagnetic force which acts directly or through a mechanical motion transmission means on the light source or light source sup-

port to move the light source or light source support from one position to another.

287 This subclass is indented under subclass 285. Subject matter wherein the light source is movable in a curved path.

288 This subclass is indented under subclass 285. Subject matter wherein the light source is urged in at least one direction by an elastically deformable means (e.g., spring).

289 This subclass is indented under subclass 285. Subject matter wherein the light source is supported by means engaging a helix bearing member in such a way that when the helix bearing member is rotated about the axis of the helix, the light source is moved by the helix in the axial direction.

290 This subclass is indented under subclass 257. Subject matter wherein the modifier includes at least two spaced adjacent modifying means each having at least two plane or curved surfaces of the type generated by a straight or curved line (the "generatrix"); the means being so arranged relative to each other and to the light source that (a) no two of the surfaces are generated by an extension of the same generatrix, (b) one of the surfaces of one means faces one of the surfaces of the adjacent means, (c) one of the surfaces of each means is exposed to light from the light source, and (d) light from the source is able to pass both surfaces of each means and at least one of the surfaces in a direction parallel or tangent to its generatrix.

(1) Note. A "grid" for purposes of classification in this subclass consists of at least two intersecting pairs of louvers.

(2) Note. The two spaced adjacent means of this subclass may be part of the same element, as for example, a spiral louver.

SEE OR SEARCH THIS CLASS, SUBCLASS:

325, for angularly adjustable louvered or grid type modifiers, per se.

330, for panel type refractor modifiers which may include louvers or grids.

342, for louvered or grid type reflectors, per se.

354, for louvered or grid type translucent or opaque modifiers, per se.

291 This subclass is indented under subclass 290. Subject matter wherein at least one of the surfaces exposed to light from the light source is nonplanar.

292 This subclass is indented under subclass 290. Subject matter wherein at least two of the surfaces exposed to light from the light source converge towards each other.

293 This subclass is indented under subclass 257. Subject matter wherein the modifier has different effects on radiation of different wavelengths, as for example, absorbing some and transmitting others or transmitting some and reflecting others.

294 This subclass is indented under subclass 257. Subject matter combined with means to conduct heat away from part of the combination or to prevent heat from being conducted to a part of the combination.

295 This subclass is indented under subclass 257. Devices provided with means to activate the light unit or with means to regulate the strength of an electric current supplied to the light unit by varying the resistance of the circuit.

296 This subclass is indented under subclass 257. Subject matter wherein the modifier includes a surface which redirects incident light back into the medium from which it came.

SEE OR SEARCH THIS CLASS, SUBCLASS:

341, for reflectors, per se, for illuminating purposes.

SEE OR SEARCH CLASS:

313, Electric Lamp and Discharge Devices, subclasses 113+ for a light source with a reflective coating on its envelope.

297 This subclass is indented under subclass 296. Subject matter having either one modifier with two reflecting surfaces or two modifiers each with one reflecting surface; the surfaces being distinguished either by being separated by nonreflecting areas or spaces or by being generated

by noncolinear straight lines; a curve and a straight line or by two different curves.

(1) Note. One of the surfaces may be integral with, or be a reflecting coating on, the light source envelope, but for a light source with a reflecting coating on its envelope, per se, see, the Search Notes below.

SEE OR SEARCH CLASS:
313, Electric Lamp and Discharge Devices, subclasses 113+ for a light source with a reflecting coating on the envelope.

298 This subclass is indented under subclass 297. Subject matter wherein the two reflecting surfaces are so arranged relative to each other and to the light source that light from the source is reflected by one surface onto the other.

299 This subclass is indented under subclass 298. Subject matter wherein at least one reflecting modifier consists of or is combined with a transparent material having surfaces so arranged relative to at least some of the incident light from the source that the angle of entry of the light with respect to the illuminated surfaces is different from the angle of the emergent light with respect to the surface from which it emerges.

300 This subclass is indented under subclass 298. Subject matter wherein at least one modifier consists of or is combined with a modifier made of material pervious to light.

301 This subclass is indented under subclass 298. Subject matter wherein at least one of the reflecting surfaces lies at least in part in one plane.

302 This subclass is indented under subclass 298. Subject matter wherein at least two opposed reflecting surfaces are generated by the revolution of different curved or straight lines (generatrices) revolved about the same axis.

SEE OR SEARCH CLASS:
280, Land Vehicles, subclass 816 for skis and ski poles having lights combined therewith.

303 This subclass is indented under subclass 302. Subject matter wherein light in both directions along the axis of the coaxial surfaces is blocked either by the light source support or a reflecting surface or some other opaque modifier.

304 This subclass is indented under subclass 297. Subject matter wherein two of the reflecting surfaces are generated by the revolution of different curved or straight lines about the same axis.

(1) Note. One of the surfaces may be integral with, or be a coating on, the light source envelope.

305 This subclass is indented under subclass 304. Subject matter wherein light in both directions along the axis of the coaxial surfaces is intercepted by either the light source support or an opaque, translucent or transparent modifier.

306 This subclass is indented under subclass 296. Subject matter wherein movement of the light source, the modifier or both with respect to some other part of the recited combination is prevented in at least one direction by the force exerted by an elastic means under stress.

(1) Note. The elastic means may act directly on the element being held by it or indirectly as through a latch.

(2) Note. The elastic means may also have another function as, for example, carrying current to the light source. Bayonet-type sockets are often of this type.

SEE OR SEARCH THIS CLASS, SUBCLASS:
267, for a light source or modifier resiliently biased against an element with a flexible means between the light source or modifier and the element to hermetically seal the juncture.
269, for resiliently mounted light units with means to rotate or tilt the light unit against the effect of the resilient means from one position to another.

307 This subclass is indented under subclass 296. Subject matter wherein the reflecting surface is part of or in combination with a modifier made of light pervious material.

308 This subclass is indented under subclass 307. Subject matter wherein the light pervious material is transparent and has surfaces arranged relative to at least some of the incident light from the source such that the angle of entry of the light with respect to the light-facing surface is different from the angle of the emergent light with respect to the surface from which it emerges.

309 This subclass is indented under subclass 308. Subject matter wherein one of the surfaces is generated by two or more straight lines or curves moving either linearly or angularly about one or more axes, such surfaces being generally characterized as "faceted" or "corrugated".

310 This subclass is indented under subclass 296. Subject matter wherein means are provided to completely encase the light source (and its envelope, if any) so that the atmosphere inside the means is isolated from the atmosphere outside.

(1) Note. The means may be or include a modifier.

SEE OR SEARCH THIS CLASS, SUBCLASS:

267, for means hermetically sealing the light source from outside atmosphere or for containing the light source, support therefor or modifier in a gas.

311 This subclass is indented under subclass 257. Subject matter wherein the modifier is made of a light pervious material.

(1) Note. Light pervious materials include light pervious fabrics even though the material out of which the fabric is made may not be light pervious.

312 This subclass is indented under the class definition. Subject matter comprising hollow, open-ended tube-like means for surrounding a flame-type light source to protect the flame or to protect the environment from the flame and to guide the flow of ambient air to or from the flame to promote combustion or to carry away combustion products while permitting the egress of light from the flame, or means cooperable with such means to improve or insure its proper functioning.

(1) Note. The classification of claimed subject matter in this subclass or the subclasses indented hereunder may necessarily be based on disclosure of intended use.

SEE OR SEARCH THIS CLASS, SUBCLASS:

356, for chimney-like modifiers (e.g., frosted) for incandescent light source.

363, for nonmodifying light-permeable enclosures of light sources.

376+, for nonmodifying chimney-like incandescent light protecting guards.

313 This subclass is indented under subclass 312. Subject matter comprising means engaging and positioned at least in part by the chimney and cooperable therewith to improve or insure the proper functioning of the chimney other than means to support or hold the chimney in place.

SEE OR SEARCH THIS CLASS, SUBCLASS:

314, for means to support or hold the chimney relative to the light source.

379, for smoke bells.

380, for spark arrestors.

SEE OR SEARCH CLASS:

126, Stoves and Furnaces, subclass 258 for heater chimney with article support.

314 This subclass is indented under subclass 312. Subject matter comprising means to secure the chimney relative to the light source against dislocation by exterior forces (e.g., force of gravity, acceleration or deceleration of a vehicle).

315 This subclass is indented under subclass 312. Subject matter wherein the chimney is made up of distinct parts or elements.

(1) Note. The chimney may be part transparent and part opaque or it may be

made of separate parts to avert breakage by unequal expansion.

(2) Note. The parts of the chimney can include a shade or means to block light rays.

SEE OR SEARCH THIS CLASS, SUBCLASS:
351+, for a shielding means and a chimney.

316 This subclass is indented under subclass 312. Subject matter wherein the bottom part of the chimney has a special form or shape to engage with a support element.

SEE OR SEARCH THIS CLASS, SUBCLASS:
314, for a chimney with a modified base and support means.

317 This subclass is indented under the class definition. Subject matter comprising means to alter the distribution or composition of incident light by changing its direction or by absorption of some or all of its energy.

(1) Note. Some terms used to denote light modifying structure may also be used to denote structure which does not modify incident light. Placement of such structure in this subclass or the subclasses indented hereunder will depend on the disclosed proximate function of the structure in the claimed combination. For example, structure denoted as a "lens" which is disclosed as focusing or otherwise redirecting light is classifiable in this subclass or the subclasses indented hereunder, but structure denoted as a "lens" which is disclosed as merely covering or protecting a light source is not classifiable here. Other examples of ambiguous terms include "shade", "globe", "bowl", "shield", and "screen".

SEE OR SEARCH THIS CLASS, SUBCLASS:
376+, "GUARD MEANS" for structure denoted as a "lens" which is disclosed as merely covering or protecting a light source.

318 This subclass is indented under subclass 317. Subject matter wherein a fluid medium is employed to modify light from a source.

SEE OR SEARCH THIS CLASS, SUBCLASS:
331, for plural successive light transmitting elements.

SEE OR SEARCH CLASS:
359, Optics: Systems (Including Communication) and Elements, subclass 886 for a filter including a fluid.

319 This subclass is indented under subclass 317. Subject matter including means to allow at least a portion of the modifier to shift from one position to another with respect to a base or support structure.

SEE OR SEARCH THIS CLASS, SUBCLASS:
277+, for a light source or support and a modifier adjustable or repositionable relative thereto.
352, for a shielding means that is collapsible or folding.

320 This subclass is indented under subclass 319. Subject matter wherein the modifier is made of a deformable material and is adjusted or repositioned by deformation.

SEE OR SEARCH THIS CLASS, SUBCLASS:
278, for a light source or support therefor and a flexible modifier.

321 This subclass is indented under subclass 319. Subject matter wherein the modifier is planar and movable only in its own plane.

SEE OR SEARCH THIS CLASS, SUBCLASS:
280+, for a modifier movable in a plane and a light source or support therefor.
323, for a curved modifier that moves in a curved plane.

322 This subclass is indented under subclass 319. Subject matter wherein the modifier is movable by rotation about at least one axis.

323 This subclass is indented under subclass 322. Subject matter wherein the modifier has a surface of revolution generated by the rotation of a straight curved line generatrix about an axis and is movable such that the surface is rotated about the axis of its generatrix.

SEE OR SEARCH THIS CLASS, SUBCLASS:

280+, for a curved modifier that moves in a curved plane and a light source or support therefor.

321, for a modifier that is planar and moves in its own plane.

324 This subclass is indented under subclass 322. Subject matter having means to move the modifier with respect to its base or support structure.

SEE OR SEARCH THIS CLASS, SUBCLASS:

284, for means to move a modifier with respect to light source or support therefor.

325 This subclass is indented under subclass 322. Subject matter wherein the modifier includes at least two spaced adjacent modifying means each having at least two plane or curved surfaces of the type generated by a straight or curved line (the "generatrix"); the means so arranged relative to each other that (a) no two of the surfaces are generated by an extension of the same generatrix; (b) one of the surfaces of one means faces one of the surfaces of the adjacent means, and (c) light is able to pass both surfaces of each means and at least one of the surfaces in a direction parallel or tangent to its generatrix, and wherein the means are pivoted either individually or as a unit for angular adjustment or repositioning relative to each other or to a common support.

(1) Note. A "grid" for purposes of classification in this subclass consists of at least two intersecting pairs of louvers.

(2) Note. The two spaced adjacent means of this subclass may be part of the same element as, for example, a U-shaped or spiral louver.

326 This subclass is indented under subclass 317. Subject matter comprising a light pervious material having a pair of opposed refracting surfaces at least one of which is, at least in part, so angularly related to the other surface that the path of a light ray incident on one opposed surface of the material and the path of the same ray after it emerges from the material through the other opposed surface are not parallel.

(1) Note. A refracting surface of this subclass type comprises an interface between the material of the refractor and some other material (usually air) in which the speed of light is different.

(2) Note. A light pervious material having only parallel refracting surfaces, such as window pane, or concentric refracting surfaces, such as a nonfocusing or nondispersing headlight lenses, is not considered a refractor of this subclass type. For the loci of such devices, see the Search Notes below.

SEE OR SEARCH THIS CLASS, SUBCLASS:

318, for a liquid type refractor.

363, for transparent globe type housings of the nonlight-modifying type.

375, for glass window-type housing closures.

376, for nonmodifying-light source protecting means made of transparent material.

SEE OR SEARCH CLASS:

313, Electric Lamp and Discharge Devices, subclasses 110+ for electric lights, per se, which include a refractor as an integral part thereof.

343, Communications: Radio Wave Antennas, subclasses 753+ for antennas with a spaced or external radio wave refractor; subclass 783 for waveguide-type antennas with an internal wave refraction means; and subclasses 909+ for radio wave refracting means, per se.

359, Optics: Systems (Including Communication) and Elements, for optical elements of general use, see subclasses 591+ for means for illuminating buildings interior with outside light, and subclasses 642+ for lenses.

404, Road Structure, Process, or Apparatus, subclasses 22+ for a pavement with light admitting means.

428, Stock Material or Miscellaneous Articles, subclasses 156+ for a stock material product in the form of a single or plural layer web or sheet including a component of varying thickness, and subclasses 426+ for a nonstructural composite web or sheet embodying one or more layers of glass.

327 This subclass is indented under subclass 326. Subject matter including means for causing a light ray striking a surface to return back into the medium from which it came.

(1) Note. A prism which only reflects is placed in the coordinated subclasses below. If the prism both reflects and refracts, it is proper for this or the indented subclasses.

SEE OR SEARCH THIS CLASS, SUBCLASS:

341, for reflectors, per se.

SEE OR SEARCH CLASS:

343, Communications: Radio Wave Antennas, subclass 755 for antennas with spaced or external radio wave refractor and reflector.

328 This subclass is indented under subclass 327. Subject matter wherein the reflector and refractor are spaced from each other and are different elements.

(1) Note. If the reflector and refractor are laminated together they are one element and placed in subclass 327.

329 This subclass is indented under subclass 327. Subject matter wherein the modifier has means to envelop a light source.

(1) Note. The enclosure may be made up of plural parts, e.g., refractor and reflector, etc.

SEE OR SEARCH THIS CLASS, SUBCLASS:

363, for a protector in the shape of a globe.

330 This subclass is indented under subclass 326. Subject matter wherein the refractor has an overall rectangular perimeter having length and width greatly exceeding its thickness.

(1) Note. The panel may be comprised of louver-like elements forming a lattice through which air may pass.

SEE OR SEARCH THIS CLASS, SUBCLASS:

339, for prisms on a circular disk or undefined area.

331 This subclass is indented under subclass 326. Subject matter wherein there is more than one refractor and the refractors are so located with respect to each other that light ray from a source passing through one refractor will also pass through another refractor.

SEE OR SEARCH THIS CLASS, SUBCLASS:

318, for a liquid enclosed within a refractor.

332 This subclass is indented under subclass 326. Subject matter wherein the refractor has areas which are joined together to form a modifier.

(1) Note. The joined areas are not integral but can be taken apart.

SEE OR SEARCH THIS CLASS, SUBCLASS:

331, for refractors which may be joined together but the light ray pass successively therethrough.

333 This subclass is indented under subclass 326. Subject matter wherein the intersections of each of the opposed surfaces with a transverse plane includes a plurality of convexities each of which constitute a refractor "element", the

joined bases of which constitute a "main surface".

(1) Note. The opposed surfaces of the subject matter of this subclass and the subclasses indented thereunder are, for example, corrugated or faceted.

334 This subclass is indented under subclass 333. Subject matter wherein at least one of the main surfaces is nonlinear.

SEE OR SEARCH THIS CLASS, SUBCLASS:

338, for a curved main surface with plural similar curvilinear refracting elements.

340, for a curved main surface with plural angular refracting elements.

335 This subclass is indented under subclass 326. Subject matter wherein the intersection of one of the opposed surfaces and a transverse plane is or includes a curved line refracting element.

(1) Note. For purposes of classification in this subclass and the subclasses indented hereunder, a distinct convexity in or of the intersection of the opposed surface with a transverse plane is referred to as a "refracting element" of the intersection.

SEE OR SEARCH THIS CLASS, SUBCLASS:

333, for refractors wherein in the intersection of each of the opposed surfaces with a transverse plane includes a curved line refracting element.

336 This subclass is indented under subclass 335. Subject matter wherein the intersection of one of the opposed surfaces and a transverse plane includes a plurality of refractor elements of different sizes or shapes.

(1) Note. For the definition of "refracting element", see the search note below.

SEE OR SEARCH THIS CLASS, SUBCLASS:

335, (1) Note, for the definition of "refracting element".

337 This subclass is indented under subclass 336. Subject matter wherein at least one of the refracting elements is comprised of at least two straight lines joined at an angle.

(1) Note. For the definition of "refracting element", see the search note below.

SEE OR SEARCH THIS CLASS, SUBCLASS:

335, (1) Note, for the definition of "refracting element".

338 This subclass is indented under subclass 335. Subject matter wherein two or more curved line refractor elements form convexities whose bases are joined to form a curved or angled base line.

(1) Note. For the definition of "refracting element", see the search note below.

SEE OR SEARCH THIS CLASS, SUBCLASS:

335, (1) Note, for the definition of "refracting element".

339 This subclass is indented under subclass 326. Subject matter wherein the intersection of one of the opposed surfaces with a transverse plane includes a plurality of regularly occurring and regularly shaped convexities each comprised of at least two straight lines joined at an angle.

SEE OR SEARCH THIS CLASS, SUBCLASS:

326, for refractors comprised of randomly occurring prismatic type refracting surfaces of the type, for example, formed by sand-blasting a glass surface.

340 This subclass is indented under subclass 339. Subject matter wherein the intersections of the other opposed surface and a transverse plane is a curve.

SEE OR SEARCH THIS CLASS, SUBCLASS:

333, for prismatic type refractors wherein the surface opposed to the prismatic forms, in intersection with a trans-

verse plane, a plurality of curved convexities.

341 This subclass is indented under subclass 317. Subject matter having a surface which redirects incident light back into the medium from which it came.

(1) Note. The term "shade" may denote either structure which reflects light from its surface and/or structure which absorbs or scatters light internally. Thus, placement in this subclass or the subclasses indented hereunder of structure denoted as a "shade" must depend on its disclosed proximate function in the claimed combination. For structure denoted as a "shade" which is not disclosed as reflecting light from one of its surfaces, see the Search Notes below.

SEE OR SEARCH THIS CLASS, SUBCLASS:

351+, for opaque or translucent modifiers including modifiers denoted as "shade", and particularly, subclasses 355+ for light permeable modifiers which scatter light by random internal reflections.

SEE OR SEARCH CLASS:

313, Electric Lamp and Discharge Devices, subclasses 113+ for electric lamps, per se, which include a reflector as an integral part thereof.

343, Communications: Radio Wave Antennas, subclasses 755, 761, 775, 779, 781+, 815, 817, 818+, and 834+, for antennas with a reflector; and subclasses 912+ for radio wave reflectors, per se.

359, Optics: Systems (Including Communication) and Elements, subclasses 838+ for reflectors of general use, per se.

404, Road Structure, Process, or Apparatus, subclasses 6+ for reflection material in a traffic guide or barrier, and subclasses 9+ for reflective material in a traffic director.

428, Stock Material or Miscellaneous Articles, subclasses 426+ for a nonstructural composite product including a layer of glass, and especially subclasses 433+ where the glass is next to a free metal or an alloy, resulting in most instances in a reflector or mirror surface.

342 This subclass is indented under subclass 341. Subject matter wherein the modifier includes at least two spaced adjacent modifying means each having at least two plane or curved surfaces of the type generated by a straight or curved line (the "generatrix"); at least one of the surfaces of each means being reflective, the means being so arranged relative to each other that (a) no two of the surfaces are generated by an extension of the same generatrix, (b) one of the surfaces of one means faces one of the surfaces of the adjacent means, and (c) light is able to pass both surfaces of each means and at least one of the surfaces in a direction parallel or tangent to its generatrix.

(1) Note. A "grid", for purposes of classification in this subclass, consists of at least two intersecting pairs of louvers.

(2) Note. The two spaced adjacent means of this subclass may be part of the same element as, for example, a U-shaped or spiral louver.

343 This subclass is indented under subclass 341. Subject matter combined with a modifier other than a reflector or refractor.

SEE OR SEARCH THIS CLASS, SUBCLASS:

327, for a reflector and refractor.

344 This subclass is indented under subclass 341. Subject matter including means to protect at least part of an illuminating device or to protect an object, e.g., person, animal, etc., from an illuminating device.

345 This subclass is indented under subclass 341. Subject matter including means to lower the temperature of or to move air to or from the reflector.

(1) Note. The means to cool the reflector can be, for example, holes for air circulation or means to circulate air or fluid over the surface of a reflector.

346 This subclass is indented under subclass 341. Subject matter wherein there is one reflective surface spaced from another reflective surface so a light ray can pass between them or a reflective surface is joined to another reflective surface to form a single reflector.

(1) Note. Surfaces laminated together do not constitute a single reflector of this subclass type.

347 This subclass is indented under subclass 341. Subject matter wherein the intersection of the reflective surface and at least one transverse plane forms a curved line.

348 This subclass is indented under subclass 347. Subject matter having a repetitive arrangement of forms, elements, designs or decorations on at least a portion of the surface.

349 This subclass is indented under subclass 347. Subject matter wherein the intersection of the reflective surface and a transverse plane forms a line with curved and straight segments.

350 This subclass is indented under subclass 347. Subject matter having a concave reflective surface generated by a symmetrical curved line rotated 180 degrees about the axis of symmetry.

SEE OR SEARCH THIS CLASS, SUBCLASS:
323, for a modifier of this subclass type generated by a segment of a circle (the generatrix) and which is repositionable about the center of the generatrix.

351 This subclass is indented under subclass 317. Subject matter having a material which affects the distribution of light either by preventing the light from passing therethrough or by randomly scattering the light as it passes therethrough.

352 This subclass is indented under subclass 351. Subject matter wherein the modifier includes means to affect a reduction in its size from an operative condition to an inoperative condition.

SEE OR SEARCH THIS CLASS, SUBCLASS:
319, for means to adjust the size or shape of a light modifier.

353 This subclass is indented under subclass 351. Subject matter wherein the modifier has means to fasten it to a shield or cover for a light source engaging light source support.

SEE OR SEARCH THIS CLASS, SUBCLASS:
343, for a modifier and a reflector with socket engaging means.

354 This subclass is indented under subclass 351. Subject matter wherein the modifier includes at least two spaced adjacent modifying means each having at least two plane or curved surfaces of the type generated by a straight or curved line (the "generatrix"); the means so arranged relative to each other that (a) no two of the surfaces are generated by an extension of the same generatrix, (b) one of the surfaces of one means faces one of the surfaces of the adjacent means, and (c) light is able to pass both surfaces of each means and at least one of the surfaces in a direction parallel or tangent to its generatrix.

(1) Note. A "grid", for purposes of classification in this subclass, consists of at least two intersecting pairs of louvers.

(2) Note. The two spaced adjacent means of this subclass may be part of the same element, as for example, a U-shaped or spiral louver.

355 This subclass is indented under subclass 351. Subject matter wherein the light is randomly scattered as it passes through the modifier.

(1) Note. The light may be scattered by, for example, random internal reflections within the modifier from a plurality of points rather than from a surface.

356 This subclass is indented under subclass 355. Subject matter wherein the diffusing means is annular.

SEE OR SEARCH THIS CLASS, SUBCLASS:
351+, for a shade when no diffusing material is claimed.

357 This subclass is indented under subclass 356. Subject matter wherein the diffusing means is a woven or knitted fabric and is supported by an annular frame.

SEE OR SEARCH THIS CLASS, SUBCLASS:
358, for annular, wire frame supported modifiers not recited as of the diffusing type.

358 This subclass is indented under subclass 351. Subject matter wherein the modifier means is supported at least in part by wire support structure.

359 This subclass is indented under subclass 351. Subject matter wherein the modifier is to be attached to the outer surface of a housing or light modifier so as to block light rays in at least one direction coming from a light unit.

SEE OR SEARCH THIS CLASS, SUBCLASS:
323, for a modifier movable in its own plane.

360 This subclass is indented under subclass 351. Subject matter wherein the means to modify the light is made of more than one piece.

(1) Note. The pieces may be joined together by a frame or support. The means to join the pieces is not considered part of the modifying means.

SEE OR SEARCH THIS CLASS, SUBCLASS:
332, for plural section refractors.

361 This subclass is indented under subclass 351. Subject matter wherein at least part of a surface of the modifier that is exposed to light rays is nonlinear with respect to a flat plane.

SEE OR SEARCH THIS CLASS, SUBCLASS:
323, for a modifier movable in its own plane.

362 This subclass is indented under the class definition. Subject matter comprising means to entirely enclose a light source except for openings for the egress of light and for which means no other light modifying function is recited.

(1) Note. Subject matter of this subclass type may only partially enclose a light source if it cooperates with some other means (e.g., "lens", "cover") to completely enclose the source except from openings for the egress of light.

SEE OR SEARCH THIS CLASS, SUBCLASS:
317+, for housings combined with or comprising light modifiers.

363 This subclass is indented under subclass 362. Subject matter having means for surrounding a light source wherein said means is made of light pervious material.

(1) Note. The globe itself may assume various shapes such as spherical, semispherical, cylindrical, etc.

(2) Note. Generally, the patents in this subclass claim globe structure which contributes to the entire enclosure of a light source.

SEE OR SEARCH THIS CLASS, SUBCLASS:
312, for a globe of the draft-type, i.e., chimney effect.

364 This subclass is indented under subclass 362. Subject matter which is mountable fully or partially in a hollow place, as in the space behind a panel, ceiling, wall, etc., the panel, etc., having an opening therein for receiving the housing.

(1) Note. A housing of this subclass type usually includes a supporting flange, mounted peripherally at or near the housing portion which engages the

panel, etc., for positioning the housing in the hollow place.

365 This subclass is indented under subclass 364. Subject matter comprising means for supporting the recessed housing in place, such as by attachment to the panel or some other structure behind the panel.

366 This subclass is indented under subclass 365. Subject matter having adjustment means to allow for variations in panel thickness or panel angle so that the housing may be easily and properly mounted.

367 This subclass is indented under subclass 362. Subject matter comprising a framework which includes sides (usually nonparallel) transparent to light, e.g., clear or partially clear glass panes.

368 This subclass is indented under subclass 362. Subject matter comprising means for mounting the housing onto some surface or object.

(1) Note. This subclass and subclasses indented hereunder differ from subclass 365 by being mounted "on" something rather than being mounted "in" something.

369 This subclass is indented under subclass 368. Subject matter having resilient mounting means, such as a rubber washer, for inhibiting or preventing the transmission of abrupt movement, to protect the housing and the light source contained therein.

370 This subclass is indented under subclass 368. Subject matter comprising an arm or bracket attached externally to the housing for mounting the housing.

371 This subclass is indented under subclass 370. Subject matter comprising means for moving the housing relative to its supporting arm or bracket.

372 This subclass is indented under subclass 362. Subject matter having means for repositioning the light source within the housing.

373 This subclass is indented under subclass 362. Subject matter having means to eliminate heat build up, such as by air ventilating holes or cooling fins.

374 This subclass is indented under subclass 362. Subject matter comprising housings combined with means to hold a closure in position relative to the housing.

(1) Note. Closures provided for in this subclass are of the type defined in subclass 375.

375 This subclass is indented under subclass 362. Subject matter comprising a housing combined with transparent means to cover at least in part the opening for the egress of light.

376 This subclass is indented under the class definition. Subject matter having means to protect a part of an illuminating device from damage or tampering or to protect an object, e.g., person, animal, etc., from an illuminating device.

(1) Note. Included in this subclass are guards in the form of a cage or screen.

377 This subclass is indented under subclass 376. Subject matter wherein part of the guard has means to attach the guard to a light source.

SEE OR SEARCH THIS CLASS, SUBCLASS:

255, for a modifier with means to engage a light source.

378 This subclass is indented under subclass 376. Subject matter wherein part of the guard has means to attach the guard to a light source support.

SEE OR SEARCH THIS CLASS, SUBCLASS:

344, for a guard and reflector means with socket engaging means.

353, for a shield and socket engaging means.

379 This subclass is indented under the class definition. Subject matter comprising means placed over flame-type light sources to prevent the heat or smoke therefrom from blackening or

otherwise injuring superimposed structures (e.g., ceilings).

SEE OR SEARCH CLASS:
104, Railways, subclass 52.
454, Ventilation, appropriate subclasses for smoke bells which may also ventilate a room or other structure.

380 This subclass is indented under the class definition. Subject matter comprising means (e.g., screens) for preventing the escape of sparks or solid burning bodies from or the access of insects or dirt into flame type light sources.

SEE OR SEARCH THIS CLASS, SUBCLASS:
164, for flame screens for miner's safety lamps.

SEE OR SEARCH CLASS:
110, Furnaces, subclasses 119+ for spark arrestors for nonillumination type flames.

381 This subclass is indented under the class definition. Subject matter comprising a device applied to a gas fixture whereby means are provided for attaching a tube, generally a flexible one, to the gas fixture or its support for supplying fuel to an auxiliary gas-light fixture or burner without destroying the usefulness as illuminators of any of the gas fixture's burner tips.

SEE OR SEARCH CLASS:
138, Pipes and Tubular Conduits, subclasses 118+ for flexible pipes.

382 This subclass is indented under the class definition. Subject matter comprising structural means to position, by itself or in combination with some other disclosed means, a light source or modifier with respect to some reference point or reference structure.

(1) Note. The "reference structure" of this subclass may be included in the "structural means" of this subclass or it may not. The "reference structure" or "reference point" need not be on an element recited in the claims for structure of this subclass type to be classifiable in this subclass or the subclasses hereunder.

(2) Note. The line between this class, subclasses 382+ and Classes 248, Supports and 439, Electrical Connectors, is as follows: Class 362, subclasses 382+ takes any combination of a support with significant structure of a light source or a light source support having structural features limited to use with the light source. Class 248 takes supporting structure, per se. The mere naming of a light source, as in the preamble of a claim or in any other way which does not positively include it as an element of the claim, will not operate to take the claim out of Class 248 unless the support itself is an essential part of the light source or has no obvious utility as a support in some other art classes. See Class 248 definitions, Note (2), for lines between this class (362) and Class 248. Class 439 takes an electrical connector, per se. The mere recitation in a claim of a light source, which is not claimed as being connected to or mounted in the electrical connector, will generally not operate to take the claim out of Class 439. If an electrical connector in name only is claimed with supporting means which is not limited in use to a Class 362 light source, the claim is classifiable in Class 439. A detailed electrical connector (e.g., a claimed contact) with or without a support therefor, claimed with a light source in name only is classifiable in Class 439. If a detailed electrical connector is combined with a support which has structural features limiting the combination to use with a claimed light source, even if claimed in name only, the claim is classifiable in Class 362. See Class 439 definition, section III (1) and (2) for lines between this class (362) and Class 439.

SEE OR SEARCH CLASS:
248, Supports, appropriate subclasses for structure for supporting light sources.
439, Electrical Connectors, appropriate subclasses for an electrical connector for use with a light source; especially subclasses 527+ for an electrical connector with supporting structure therefor.

383 This subclass is indented under subclass 382. Subject matter wherein the structural means to position a light source includes a pivoted support and (1) audible means to detect sound emitted by an object and to transmit the sound to the ears of a human operator or to a meter visually noted by a human operator, or (2) visual sighting means under the control of a human operator to locate an object and means under the control of the operator responsive to the audible means or to the visual sighting means connected to the pivoted support to pivot the light source support in the direction of the sound of sighting object.

(1) Note. The subject matter of this subclass type includes, for example, aircraft detection search lights movable in two different planes.

384 This subclass is indented under subclass 382. Subject matter wherein the structural means to position a light source or modifier includes a pivoted lamp support, a freely moving material mounted to move in response to a change of direction or a change in velocity of the material and means connecting the freely movable material to the pivoted headlight support.

(1) Note. The material may be solid or fluent material which forms the freely movable mass.

(2) Note. Included are gyroscopes, pendulums and flywheels and the lamp support may be vertically or horizontally movable.

SEE OR SEARCH THIS CLASS, SUBCLASS:

269+, for a tiltable or rotatable light source and modifier movable as a unit.

277+, for a light source and an adjustable or repositionable light source with a light modifier.

319+, for an adjustable positionable light modifier.

368+, for a light housing with an adjustable mounting means.

372, for a light housing with an adjustable light source.

385 This subclass is indented under subclass 382. Subject matter wherein the structural means to position a light source or modifier includes a movable support for the light source or modifier and a motor driven by a liquid or a gas under pressure greater than or less than atmospheric pressure to move the movable support.

386 This subclass is indented under subclass 382. Subject matter wherein the structural means to position a light source or modifier is a movable support for the light source or modifier and an electromagnetic operator connected to the support to move the support when the electromagnetic operator is energized.

(1) Note. The electromagnetic operator includes a solenoid or electric motor and the electric circuit to energize the operator may be included in the claim.

SEE OR SEARCH THIS CLASS, SUBCLASS:

35, for revolving lamps which may be electromagnetically rotated.

37+, for a vehicle steering mechanism or element actuated pivoted lamp or lamp support which may be electromagnetically actuated.

227+, for plural light sources, particularly subclass 233 for remote adjustment or positioning means for plural light sources, which may be electromagnetically operated.

272, for a light source or support and modifier which is tiltable or rotatable as a unit and is electromagnetically actuated.

286, for an adjustable or repositionable light source or light source support which is electromagnetically adjusted or repositioned.

SEE OR SEARCH CLASS:

310, Electrical Generator or Motor Structure, particularly subclasses 12+ for linear motors, per se, and subclasses 40+ for rotary motors.

318, Electricity: Motive Power Systems, subclasses 119+ for reciprocating or oscillating motor energized systems; subclass 139 for battery-fed motor systems and subclasses 445+ for auto-

matic and/or time delay circuits to energize an electric motor; particularly subclasses 466+ for movement, position or limit of travel control circuits for an electric motor.

387 This subclass is indented under subclass 382. Subject matter which includes a flexible extensible electric cord to deliver electrical energy to a light source from an appropriate electrical source, and a cord storage member to hold the cord when not in use or to hold the excess cord not needed when in use.

(1) Note. Rotating reels, fixed reels and housings to store the electric cord are included in this subclass.

(2) Note. Class 248 can have reels for suspended supports even though limited to use with electrical conductors. Also, an in name only lamp or lamp unit combined with a storage device for the electrical power cord delivering power to the lamp or lamp unit is Class 191. Class 242 will not take reels restricted to use with electrical conductors.

SEE OR SEARCH THIS CLASS, SUBCLASS:
157, for self powered lamps which include an extensible electric cord storage member.
258, for a light source or support therefor and a modifier with an extensible electric cord storage member.

SEE OR SEARCH CLASS:
191, Electricity: Transmission to Vehicles, subclasses 122+ for flexible extension reels.
242, Winding, Tensioning, or Guiding, subclasses 324+ for a reeling device of general use, particularly subclasses 400+ for a reeling device combined with a nonreeling carrier, for example a portable electric appliance, and subclasses 388+ for a reeling device for multiple line segments; e.g., one fixed to an electrical source and a second portion connected to a shiftable electrical appliance.
248, Supports, subclass 329 for a suspended support by a cord having a reel on which the cord is wound.

388 This subclass is indented under subclass 382. Subject matter wherein the support has means enabling it to cooperate with either a horizontal or a vertical surface to position a light source or modifier with respect thereto.

389 This subclass is indented under subclass 382. Subject matter having means to increase the frictional resistance to relative movement between the support and the reference structure without increasing the force between the two.

(1) Note. This device is generally a formation of spurs projecting from the bottom of the support to prevent displacement when placed on slippery surfaces.

390 This subclass is indented under subclass 382. Subject matter having resilient means for inhibiting or preventing the transmission of abrupt motion between one part of the support and another or the reference structure.

391 This subclass is indented under subclass 382. Subject matter wherein the support includes means to suspend a light source or modifier from a suspended cable or line.

(1) Note. The cable or line is suspended from two points, and the support of this subclass type is attachable to the cable or line between the two points.

392 This subclass is indented under subclass 382. Subject matter wherein the support is covered by or comprises means which duplicates in appearance, a candle.

SEE OR SEARCH THIS CLASS, SUBCLASS:
161+, for candle-type illuminating means.

393 This subclass is indented under subclass 392. Subject matter wherein part of the support is movable relative to another part of the support to reposition the light source or modifier.

394 This subclass is indented under subclass 382. Subject matter comprising means to open or close the circuit energizing an electrical light

source other than such means which are merely nominally recited.

SEE OR SEARCH CLASS:

200, Electricity: Circuit Makers and Breakers, subclass 2 for circuit make and break means which functions according to the fully raised position of the light source or modifier; subclasses 329+ for switch actuators or operators.

395 This subclass is indented under subclass 394. Subject matter comprising a standard wherein a portion thereof actuates a circuit breaker.

(1) Note. Ordinary pull-chain and push-button type switch actuators are not considered portions of standards of this subclass type even though mounted thereon since such actuators do not contribute to the supporting function of the standard.

(2) Note. For the definition of the term "standard", as used in the definition and notes of this subclass, see the search note below.

SEE OR SEARCH THIS CLASS, SUBCLASS:

410, for the term "standard", as used in the definition and notes of this subclass (395).

396 This subclass is indented under subclass 382. Subject matter wherein the support includes either (1) at least two members movable towards each other to grip the reference structure between them, or (2) an effectively C-shaped member which is loosely engageable over a reference structure, to support a light source or light modifier against the force of gravity.

SEE OR SEARCH CLASS:

2, Apparel, subclass 422 for light source supports combined with hats, generally miners' caps, which employ clamps or hooks.

397 This subclass is indented under subclass 382. Subject matter wherein the support is attachable to the reference structure by means which creates or maintains a vacuum between the support and the reference structure, so that the force of atmospheric pressure counteracts forces tending to move the support and reference structure relative to each other.

398 This subclass is indented under subclass 382. Subject matter which includes a magnetic means (permanent or electrical) to attach the support to the reference structure.

SEE OR SEARCH CLASS:

248, Supports, subclass 206 for magnetically mounted brackets of general application.

439, Electrical Connectors, subclasses 38+ for an electrical connector with magnetic securing or supporting means.

399 This subclass is indented under subclass 382. Subject matter comprising a support liftable by a human being and having means conformable to the grasp of the human hands to facilitate the lifting of the support.

SEE OR SEARCH CLASS:

16, Miscellaneous Hardware, subclasses 110+ for handles not otherwise classified.

220, Receptacles, subclasses 752+ for a container handle.

439, Electrical Connectors, subclasses 476.1+ for an electrical connector with a handle or a distinct manipulating means.

400 This subclass is indented under subclass 399. Subject matter wherein the handle or bail has structural means for attaching a means thereto to protect the illuminating means or the user.

401 This subclass is indented under subclass 382. Support comprising (1) supporting structure, such as a rod, which is supported by a fulcrum at some point between its ends, one portion of the rod between the fulcrum and an end of the rod being adapted for supporting the light source or light modifier and another portion of the rod between the fulcrum and the other end of the rod having means, usually adjustable for equalizing the otherwise upsetting force of the weight of the light source or modifier in order to position the light source or modifier, or (2) a system of ropes and pulleys, one end of the

rope having the light source or modifier attached thereto and another end having balancing means for equalizing the force tending to move the light source.

402 This subclass is indented under subclass 401. Subject matter wherein the force equalizing means is a resilient member.

403 This subclass is indented under subclass 382. Subject matter comprising (1) means for supporting the light source or modifier from above against movement due to gravity; and (2) means for permitting the light source or modifier to be moved by the force of gravity from one supported position to another.

404 This subclass is indented under subclass 382. Subject matter which depends from an overhead horizontal surface, comprising means which extends for a substantial length between the ceiling or the canopy (cover) which engages the ceiling, and the light source or the light modifier.

(1) Note. The suspended support of this subclass type is more than a "nipple-pipe" (commonly limited in the trade to a 6 inch length) which, when used, is usually concealed by a canopy.

(2) Note. The canopy of this subclass type does not conceal a light socket or light source.

SEE OR SEARCH THIS CLASS, SUBCLASS:

403, for adjustable supports comprising light source raising and lowering means.

416, for specialized hanging means for arc lamps.

430, for adjustable supports having means for being mounted to a reference structure, such as a ceiling.

437+, for a canopy for covering a socket or for supporting a light modifier.

457, for miscellaneous ceiling mounted supports with canopies.

405 This subclass is indented under subclass 404. Subject matter comprising a member with a plurality of radial arms extending therefrom.

(1) Note. Supports of this subclass type may have one or more ring type supports attached to the radial arms.

(2) Note. The member of this subclass type may not be a prominent one, but may comprise only a central joint connection for the radial arms.

406 This subclass is indented under subclass 405. Support comprising attaching means for connecting the member and its associated structure to the ceiling.

407 This subclass is indented under subclass 404. Subject matter comprising a cord or rope or an electrical conductor, which supports the light source, combined with a device for repositioning the light source an its light modifier to concentrate light rays on a desired area or object.

408 This subclass is indented under subclass 404. Subject matter comprising a light modifier holder.

409 This subclass is indented under subclass 404. Subject matter for supporting a nonelectric light source.

410 This subclass is indented under subclass 382. Subject matter wherein the structural means is provided with means cooperable with an underlying (i.e., adjacent in the direction of the force of gravity) planar surface normal to the force of gravity to sustain or position without the aid of any securing device; the light source or modifier against movement having a component in the direction of the force of gravity (e.g., tilting or "tipping over").

(1) Note. The means cooperable with an underlying planar surface of this subclass type provides a "base" for the light source or modifier.

411 This subclass is indented under subclass 410. Subject matter including means for regulating electric power supplied to an electric light source (e.g., a resistance element, transformer, etc.) other than merely a nominally recited on-off switch.

412 This subclass is indented under subclass 410. Subject matter wherein the standard is, or resembles, a vessel having a mouth of smaller area than the greatest cross-sectional area of the vessel.

413 This subclass is indented under subclass 410. Subject matter wherein one part of the standard is repositionable relative to another part or to the reference point or structure.

414 This subclass is indented under subclass 410. Subject matter comprising light source supporting means mounted at the top end of the standard.

415 This subclass is indented under subclass 410. Subject matter having nonelectric light source features.

416 This subclass is indented under subclass 382. Subject matter comprising means for suspending an arc lamp from some reference point or structure.

SEE OR SEARCH THIS CLASS, SUBCLASS:
404+, for chandelier and other ceiling-suspended type supports.

417 This subclass is indented under subclass 382. Support comprising means suspendable from the reference structure having at least two depending arms for supporting a light source therebetween.

(1) Note. The arms are usually shaped for receiving an annular light modifier, e.g., shade.

418 This subclass is indented under subclass 382. Subject matter wherein one part of the support is repositionable relative to another.

419 This subclass is indented under subclass 418. Subject matter wherein the adjustable light support has structure to move the light support in a plurality of ways each move being distinct from the other or the adjustable light support has at least a portion of the adjustable light support movable in another way in addition to the movement of the adjustable support.

420 This subclass is indented under subclass 419. Subject matter wherein there are plural adjustable headlight supports each support or a portion of each of the supports being pivoted in two different ways and the plural headlight supports or the positions of the supports are connected so that both headlight supports or the portions of the headlights move together and manual means to pivot both headlight supports or both portions or the headlight supports in at least one of the two different ways.

(1) Note. The term "manual" includes hand, feet, arm or other body portion operated motion transmission means.

421 This subclass is indented under subclass 419. Subject matter wherein the adjustable light source support includes a spherical bearing surface, a holder or outer member conforming to the bearing surface enclosing the bearing surface so that the bearing surface and the holder or outer member have relative movement with respect to each other to form a universally movable light support for a light source.

(1) Note. The subject matter of this subclass type includes, for example, hemispherical ball and socket light supports.

SEE OR SEARCH THIS CLASS, SUBCLASS:
523+, for a vehicle or a vehicle element with an operating means to move a lamp, lamp support or subcombination of a lamp.
227+, for plural lamp sources, particularly subclass 233 for remote adjustment or positioning means for the lamp source.

SEE OR SEARCH CLASS:
248, Supports, subclasses 181.1+ for a stand having a ball and socket joint.
403, Joints and Connections, subclasses 52+, particularly subclasses 122+ for ball and socket joints.

422 This subclass is indented under subclass 419. Subject matter wherein the adjustable light support includes a tube capable of movement about the tube axis; a motion transmission member mounted for movement within the

tube; the adjustable light support including a pivoted portion which forms the support of a light source capable of movement in addition to the movement of the tube about its axis and manual means connected to the tube to rotate the tube and the movable portion about the tube axis and connected to the motion transmission member to pivot the movable portion of the support selectively about its pivot.

423 This subclass is indented under subclass 422. Subject matter wherein the internal motion transmission member is mounted in the tube for rotary movement and connected at each end of the member are a pair of rotating members with teeth which intermesh to transmit motion imparted by the manual means to the pivoted portion of the light support.

424 This subclass is indented under subclass 422. Subject matter wherein the internal motion transmission member is mounted for movement in a rectilinear manner and the internal motion transmission member connects the manual means to the pivoted portion of the light support so that the manual means imparting motion transfers motion to the pivoted portion by way of the internal motion transmission member.

425 This subclass is indented under subclass 419. Subject matter wherein the structure to move the light support in a plurality of ways includes a manually operated motion transmission member mounted to have straight line and circular motion connected to the adjustable support such that the straight line motion of the member causes the movable light support to turn one way and the circular movement of the member causes the support to move another way.

426 This subclass is indented under subclass 419. Subject matter wherein the adjustable light source support has pivotal movement about a first axis and the support includes two diverging members, each member having a pivot point so that the two pivot points mount a light source or an element of a light source or an element of a light source for movement about a second axis different from the first axis.

SEE OR SEARCH THIS CLASS, SUBCLASS:

39, for the combination of a vehicle steering mechanism or element and a pivoted lamp or lamp support which also has a pivoted motion about another axis under the control of manual means.

269+, for a light source or support and modifier which is tiltable and rotatable.

368+, for a light housing with mounting means which has movement about plural axes.

385, for a lamp support having motion about plural axes under the control of at least one fluid pressure motor.

386, for a lamp support having plural motions under the control of at least one electromagnetic motor or solenoid.

523+, for the combination of a vehicle or vehicle element with a pivoted lamp or lamp support which may also be pivoted about a second axis.

SEE OR SEARCH CLASS:

248, Supports, subclasses 124.1+ for a vertically and horizontally adjustable standard bracket; subclass 258 for a rod type bracket adjustable in two different directions; subclass 278.1 for an adjustable bracket having vertical and horizontal pivots; subclasses 393+ for a movable stand which is tiltable and adjustable in a horizontal plane.

427 This subclass is indented under subclass 418. Subject matter wherein the light support supported in two or more positions includes at least a member having an axis and means to mount the member so that (1) the member can turn about its own axis, (2) the member can be turned about an axis different from the axis of the member, or (3) a light source supported by the member can be turned about the axis of the member.

428 This subclass is indented under subclass 427. Subject matter wherein there is motion transmission means connected to the pivoted light support member or to a pivoted light source supported on the member to pivot the member

or the light source as a result of a force imparted to the motion transmission means.

429 This subclass is indented under subclass 418. Subject matter comprising an adjustable socket holder.

430 This subclass is indented under subclass 418. Subject matter comprising means for attaching the adjustable arm or bracket to the reference point or reference structure.

431 This subclass is indented under subclass 382. Subject matter comprising a post which must be secured to the floor, ground, or other substantially horizontal surface in order to function properly as a light source support.

SEE OR SEARCH THIS CLASS, SUBCLASS:

403, for posts having light unit raising and lowering means.

410+, for similar supports which function without the aid of any securing device.

432 This subclass is indented under subclass 382. Subject matter comprising structural means for spacing a light source or modifier from a solid vertical barrier (e.g., building wall, retaining wall).

(1) Note. The subject matter of this subclass and the subclasses indented hereunder usually consists of an elongated member with a light source supporting means at or near one end, and at the other end, means integral or cooperable with the reference structure to support the member itself, or a pair of such members for cooperatively supporting a light source between them.

SEE OR SEARCH THIS CLASS, SUBCLASS:

370+, for arms or brackets combined with a housing.

404+, for a ceiling-suspended light source having an arm or bracket.

410+, for standards having an arm or bracket.

431+, for posts having an arm or bracket.

433 This subclass is indented under subclass 382. Subject matter comprising devices for supporting modifiers in position relative to a light source.

SEE OR SEARCH THIS CLASS, SUBCLASS:

317+, for supports which are integral parts of the modifiers.

434 This subclass is indented under subclass 433. Subject matter comprising skeleton frames having a flanged ring to engage a light source engaging support and electrical connector and a ring to which the modifier is connected.

435 This subclass is indented under subclass 434. Subject matter attached to the socket which are such length as to support the modifier below the socket.

436 This subclass is indented under subclass 435. Subject matter attached to the socket and provided with clamping jaws which engage the modifier below the socket.

437 This subclass is indented under subclass 433. Subject matter which additionally enclose a light source engaging support and electrical connector.

438 This subclass is indented under subclass 437. Subject matter which cover the electric socket and clamp the modifier thereto.

439 This subclass is indented under subclass 437. Subject matter comprising means for attaching the light modifier holder or socket cover to the reference point or the reference structure.

440 This subclass is indented under subclass 433. Subject matter comprising a resilient ring to hold or clamp the rim of a modifier within the flange of a frame such as a socket cover, socket extension, or skeleton frame.

441 This subclass is indented under subclass 433. Subject matter which engage the modifier at its lower end, the support not being an integral part of the shade.

442 This subclass is indented under subclass 441. Subject matter that consists of a series of radial arms for directly engaging the modifier, the support not being an integral part of the modifier.

443 This subclass is indented under subclass 433. Subject matter in the form of collars mounted on a light source engaging support and electrical connector which collars support the modifier against gravity but, upon removal, permit the modifier to slip off the socket.

444 This subclass is indented under subclass 433. Subject matter in the form of spring frames mounted directly on the bulb.

SEE OR SEARCH THIS CLASS, SUBCLASS:
255+, for modifiers having spring frames for mounting on a bulb.

445 This subclass is indented under subclass 433. Subject matter in the form of spring frames mounted directly on the middle or bulged portion of the lamp chimney.

446 This subclass is indented under subclass 433. Subject matter comprising means to support a modifier on the side of the light source.

447 This subclass is indented under subclass 433. Subject matter especially designed to support modifiers upon candles.

448 This subclass is indented under subclass 433. Subject matter which are formed integrally with a portion of a light source engaging support and electrical connector or a cover for such a support.

449 This subclass is indented under subclass 433. Subject matter adapted to be adjusted to fit various sizes of modifiers or to change the position of the modifier in relation to the light source.

450 This subclass is indented under subclass 433. Subject matter reducible in size when not in use.

451 This subclass is indented under subclass 433. Subject matter that allows the modifier to be readily dropped or otherwise moved out of the way relative to the light source to allow access to the light.

452 This subclass is indented under subclass 433. Subject matter comprising a plurality of substantially vertical arms, carrying a flanged ring or shield which engages the perforations in the crown of an annular modifier; the arms being within the modifier and attached at their other ends to the light support or electric socket.

453 This subclass is indented under subclass 433. Subject matter comprising chains or rods having fastening means, such as bands or clips, which engage the rim of a bowl shaped light modifier.

454 This subclass is indented under subclass 453. Subject matter having means for supporting an electric socket.

455 This subclass is indented under subclass 433. Subject matter comprising a device for holding a lens and for attaching the lens to an element of this class, such as a chimney, electric socket, light source, etc.

456 This subclass is indented under subclass 455. Subject matter wherein the lens holder is a plate having an aperture therein for receiving the lens.

SEE OR SEARCH CLASS:
40, Card, Picture, or Sign Exhibiting, subclasses 579+ for illuminated sign, lamp box with perforated face.

457 This subclass is indented under the class definition. Subject matter comprising miscellaneous attachments and fittings, not otherwise provided for.

458 This subclass is indented under the class definition. Subject matter not classifiable elsewhere.

459 SUPPORTED BY VEHICLE STRUCTURE: (E.G., ESPECIALLY ADAPTED FOR VEHICLE)

This subclass is indented under the class definition. Subject matter comprising an illuminating means supported on a device intended for carrying passenger,goods or equipment (e.g., a car, truck, train, plane, or boat) or part of such a device intended for carrying passenger, goods, or equipment.

(1) Note. Illuminating means combined with a wheelborne support which cooperates with a track having limited movement while in normal use is classified in this subclass.

(2) Note. The illuminating means of the subject matter of this subclass and the subclasses indented hereunder consists of a light source, modifier, light source support, or modifier support or combinations thereof.

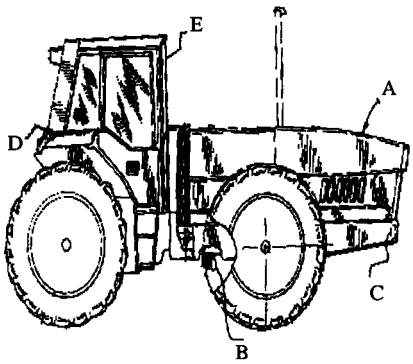

A - Vehicle; B - Vehicle other light; C - Vehicle rear light; D - Vehicle front light; E - Vehicle cab or operator's station

SEE OR SEARCH CLASS:

315, Electric Lamp and Discharge Devices: Systems, subclasses 77+ for vehicle headlight systems with no claimed light support or wherein the headlight is only nominally recited.

460 Including headlamp beam measuring or indicating (e.g., headlamp beam leveling, aiming, inclination detecting):

This subclass is indented under subclass 459. Subject matter comprising a leveling gauge, angular scale, or similar device to facilitate leveling or aiming the light ray of the light, usually consisting of a reflector and a special lens, relative to the vehicle or a positioning and directing device for positioning or directing the elevation direction of the light ray relative to the vehicle.

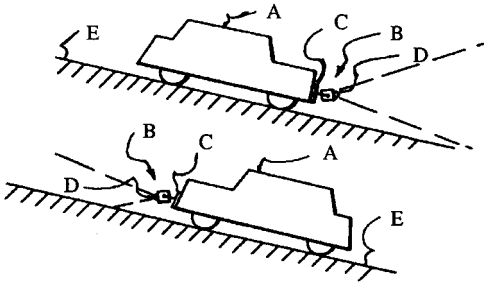

A - Vehicle; B - Headlight assembly; C - Headlight support plate; D - Headlight with inclination adjusting and detecting mechanism; E- Inclined road

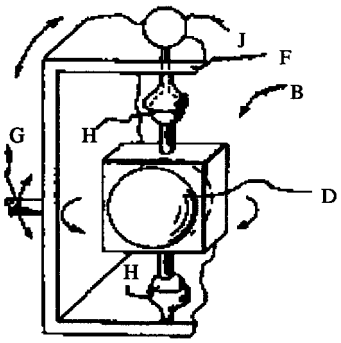

F - Headlight receptacle; G - Swing shaft; H - Pivoted ball & socket shaft; J - Electric motor

461 Plumb or level having liquid-type bubble:

This subclass is indented under subclass 460. Subject matter including (1) a weight suspended from an end of a line and used to test vertical alignment of the headlamp beam or (2) a positioning device consisting of a body portion having an elongated chamber and having a viscous fluid entrapping a gas bubble which moves within the confines of the chamber and further including a viewing surface formed on

the body portion providing a view of the position of the gas bubble through the viewing surface to provide a visual indication for proper aiming of the headlamp beam.

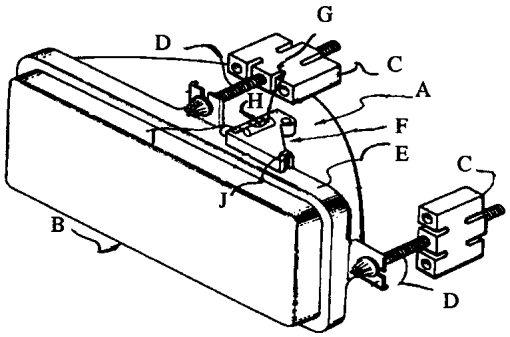

A - Leveling device; B - Headlamp assembly; C - Adjustment assemblies; D - Adjustment screws; E - Lamp surface; F - Housing; G - Fluid receiving chambers; H - Bubble; J - Clamps

SEE OR SEARCH CLASS:

33, Geometrical Instruments, subclass 288 for an alignment device for positioning or determining the position of an automobile headlamp, subclasses 335+ for a device adapted for cooperation with the vehicle headlight for indicating a direction, subclasses 365+ for a level or plumb responsive to terrestrial gravitation and establishing either a horizontal or a vertical direction, and subclasses 613+ for a gauge to verify the alignment or proper mutual arrangement of the two parts.

356, Optics: Measuring and Testing, subclass 121 for an optical axis adjusting system for a headlamp, and subclass 249 for a fiducial instrument having a liquid surface (e.g., bubble level).

462 Including indicia mark (e.g., calibrated rod)

This subclass is indented under subclass 461. Subject matter comprising an additional measuring unit consisting of a guide member having a scale fixed to the illuminating means,a rotatable aiming screw, a slide member threadedly joined with a male screw portion of the aiming screw and wherein (1) the slide member is combined with the guide member and the aiming screw and (2) the rotation of the aiming screw moves the slide member along the guide member to provide the visual indication of the illumination angle of the headlamp beam.

(1) Note. The measuring unit may also include a display mechanism consisting of an indicator needle which rotates with respect to a calibrated screen or a radial scale to display relative angle of headlight alignment and may further include a knob for initial adjustment or setting of the needle position.

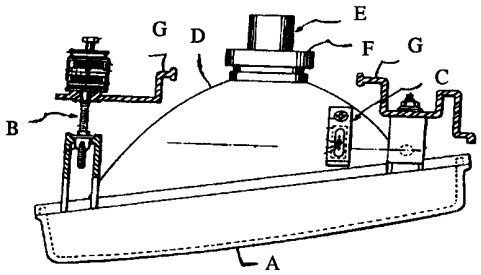

A - Front lens; B - Calibrated rod; C - Level or plumb; D - Lump body; E - Bulb socket; F - Locking cap; G - Lamp housing

SEE OR SEARCH CLASS:

33, Geometrical Instruments, subclass 288 for a device for positioning or determining the position of the automotive headlamp, and subclass 335 for a indicator device adapted for cooperation with the vehicle headlamp for determining a deviation from the horizontal or vertical.

463 Including indicia mark (e.g., calibrated rod):

This subclass is indented under subclass 460. Subject matter comprising an additional measuring unit consisting of a guide member having a scale fixed to the illumination means, a rotatable aiming screw, a slide member threadedly joined with a male screw portion of the aiming screw and wherein (1) the slide member is combined with the guide member and the aiming screw and (2) the rotation of the aiming screw moves the slide member along the guide member to provide the visual indication of the illumination angle of the headlamp beam.

(1) Note. The measuring unit may also include a display mechanism consisting

of an indicator needle which rotates with respect to a calibrated screen or radial scale, to display relative angle of headlight alignment and may further include a knob for initial adjustment or setting of the needle position.

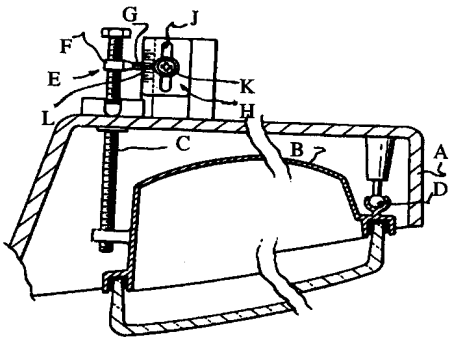

A - Lamp housing; B - Reflecting mirror; C - Adjusting screw; D - Ball joint; E - Index portion; F - Nut; G - Index member; H - Mating index portion; J - Elongated groove; K - Mounting screen; L - Mating index

SEE OR SEARCH CLASS:

33, Geometrical Instruments, subclass 288 for a device for positioning or determining the position of the automotive headlamp and subclass 335 for a indicator device adapted for cooperation with the vehicle headlamp for determining a deviation from the horizontal or vertical.

464 Condition responsive (e.g., position): This subclass is indented under subclass 459. Subject matter comprising a sensing means having a characteristic which changes in response to a change in a particular mode or location of the illumination means and wherein the change in characteristic produces a change in the position or intensity of the illumination means.

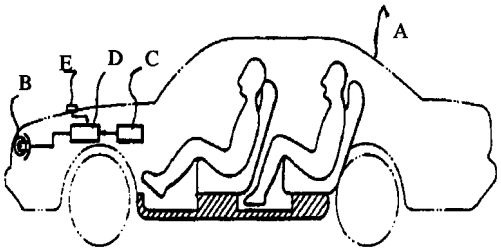

A - Vehicle; B - Headlamps; C - Power supply section; D - Lamp controller for turning on and off headlamps in response to signal generated from sensor "E"; E - Brightness sensor

SEE OR SEARCH THIS CLASS, SUBCLASS:

276, for a condition responsive light source and a modifier, and subclass 802 for a position or condition responsive switch.

SEE OR SEARCH CLASS:

307, Electrical Transmission or Interconnection Systems, subclass 10.8 for a lighting circuit for a automobile.

315, Electric Lamp and Discharge Devices: Systems, subclasses 77+ for a lamp and discharge system as applied to a vehicle in general.

340, Communications: Electrical, subclasses 468+ for a condition responsive external signal light system.

465 Automatically adjusted headlamp beam: This subclass is indented under subclass 464. Subject matter wherein the illuminating means comprises a shaft of light ray or rays and wherein the intensity of light ray or rays is controlled without manual intervention.

(1) Note. Patents in this subclass include a light sensor attached on the pivotal headlamp for detecting the presence of a leading vehicle, an adjusting mechanism for adjusting the optical axis of the headlamp, and a controller for actuating the adjusting mechanism in response to the sensor signal of the light sensor to move the headlamp for automatically adjusting the angle of the headlamp optical axis.

(2) Note. Patents in this subclass include (a) a sensor means, attached to the headlamp means, for detecting an obstacle and generating a sensor signal corresponding to the obstacle, (b) an adjusting means, associated with headlamp, for adjusting the optical axis of the headlamp means, and (c) a control means, coupled to the sensor means and the adjusting means, for actuating the adjusting means to automatically adjust the headlamp means to illuminate a predetermined area.

(3) Note. A system for the automatic correction of the orientation of the beam of light of the headlamp includes a means for turning at least the optical system of the headlamp about an axis of rotation adjacent the optical axis and a transducer detector system adapted to detect the angle of inclination of the vehicle while turning, and a means for turning the optical system of the headlamp being controlled by the transducer detector in such a manner that a compensating orientation variation is applied to the headlamp beam when the vehicle makes a turn.

(4) Note. There are some patents in this subclass which only adjust the headlights' intensity for fog, rain, or other light conditions.

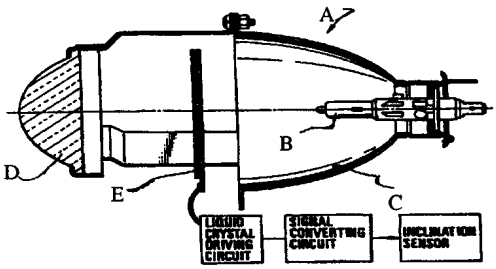

A - Headlamp; B - Light source; C - Reflector; D - Lens; E - Light shielding plate

SEE OR SEARCH CLASS:

315, Electric Lamp and Discharge Devices: Systems, subclasses 82+ for a vehicle headlight system, and subclass 84 for a door closure controlled load device.

340, Communications: Electrical, subclasses 468+ for a condition responsive external signal light system.

466 Computer controlled:

This subclass is indented under subclass 465. Subject matter wherein action of the control means is determined by an electronic device for performing a mathematical calculation.

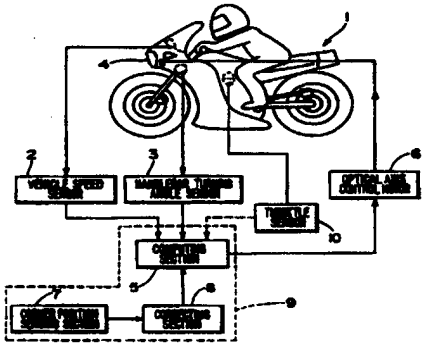

SEE OR SEARCH CLASS:

364, Electrical Computers and Data Processing Systems, subclasses 424.01+ for vehicle guidance, operation, or indication in general.

467 Electromagnetically, electrodynamically, or electronically actuated:

This subclass is indented under subclass 465. Subject matter including an operative means comprising (1) an electrically energized coil of insulated wire producing a magnetic field in the coil, (2) mutually coupled conductors which are caused to move relative to each other by interaction of the magnetic field produced by flow of electric current in the conductors, and (3) a closed regulating circuit having an input derived through transducers from the inclination of the vehicle axis with respect to the road surface.

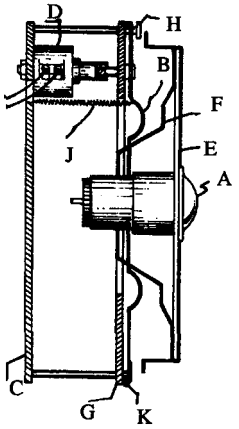

A - Headlight; B - Housing; C - Vehicle Structure; D - Bimetallic compensator; E - Lamp-holding ring; F - Lamp adjusting ring; G - Mounting Plate; H - Stop nut; J - Return spring; K - Pivots. NOTE: UPON ACTIVATION, COMPENSATOR EXPANDS AND PUSHES HOUSING FORWARD TO DEFLECT HEADLIGHT BEAM.

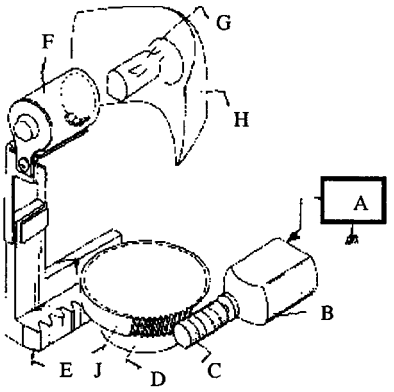

A - Motor control circuit; B - Electric motor; C - Worm gear; D - Pinion gear; E - Rack; F - Globe; G - Bulb (Light source); H - Reflector or reflecting mirror; J - Worm wheel

SEE OR SEARCH CLASS:

307, Electrical Transmission or Interconnection Systems, subclass 10.8 for an electrically controlled vehicle-mounted system for an automobile including lighting circuits.

468 Hydraulically or pneumatically actuated: This subclass is indented under subclass 465. Subject matter wherein the headlight adjusting mechanism is controlled by a piston of a liquid or gas pressure operated device.

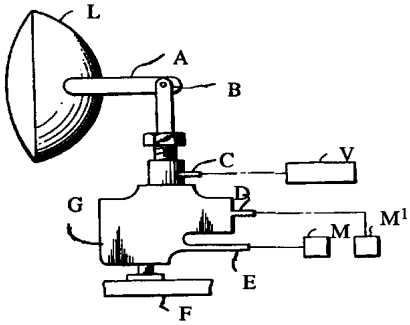

A - Lever; B - Ball joint; C - Pipe stub; D, E - Pipe stubs = Fluid lines; F - Fixed vehicle structure; G - Control element; L - Headlight; M - M^1 -Axle modulators; V - Vacuum source

469 Weight biased or mechanically actuated: This subclass is indented under subclass 465. Subject matter wherein (1) a centrifugal force being developed when the vehicle is turned is utilized to effect a corresponding pivotal movement of the headlight so that the light beam is directed along the road ahead of the vehicle or (2) a flexible connection or similar device extending between parts associated with and movable relative to sprung and unsprung vehicle members controlling the direction of the headlight beam.

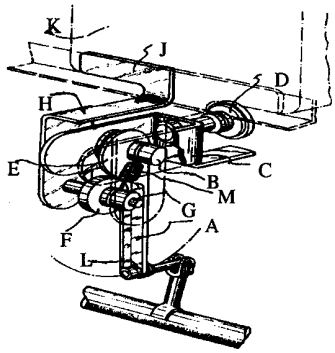

A - Crank arm controlled at its end "L" by transverse shaft B which controls headlight; B - Shaft; C - Clamp; D - Member to vehicle body; E - Cam; F - Disc; G - Axle; H - Stirrup (Free to rotate about B and fastened to

member "J"; J - Member connected to headlight; K - Headlight; M - Spring connects shaft and axle

470 Aircraft:
This subclass is indented under subclass 459. Subject matter including illuminating means especially adapted for a vehicle adapted to be supported above the earth entirely by air pressure.

(1) Note. The light source may be mounted externally or internally of the aircraft or portion of the aircraft.

(2) Note. Only enough structure of the aircraft or portion of the aircraft is generally given to form a support for the light unit.

(3) Note. When the light source or subcombination is mounted internally of the aircraft, an aperture is claimed to permit the illumination to be radiated therethrough to the exterior of the aircraft or portion thereof.

(4) Note. Included here is a lamp in name only, or a lamp with or without an electrical circuit combined with nominally recited aircraft or aircraft part.

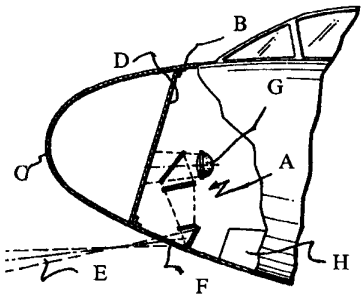

A - Lighting system; B - Airplane hose; C - Radome; D - Forward bulkhead; E - Exit light beam; F - Exit lens; G - Lamp; H - Wheel well

SEE OR SEARCH CLASS:
244, Aeronautics and Astronautics, subclasses 24+ for an aircraft detail combined with a nominally recited illumination device, lighter than air, in general, subclasses 114+ for a aircraft landing field arrangement in general, and subclasses 117+ for a aircraft structure in general.

471 Interior (e.g., instrument, cockpit):
This subclass is indented under subclass 470. Subject matter wherein the aircraft comprises an instrument board and a cockpit and the illuminating means is adapted for lighting of the instrument board or cockpit of an aircraft.

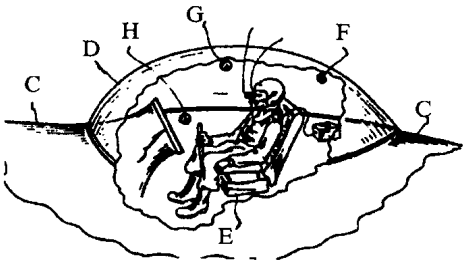

A- Cockpit; B- Instrument panel; C- Aircraft fuselage; D- Canopy; E- Pilot seat; F, G, H - Illuminating light fixtures

SEE OR SEARCH THIS CLASS, SUBCLASS:
23, for an illuminated scale or dial.
29+, for an internal light source including indirect illumination.
26+, for an edge illuminated modifier.
549, for a light emitting diode.

472 Having retractable lamp:
This subclass is indented under subclass 470. Subject matter including a closure member connected with a linkage to move between the opened and closed positions and an actuator mechanism including a motor and a linkage arrangement to move the illuminating means in the first position to project a beam of light and a second position wherein the illuminating means is concealed within a housing body.

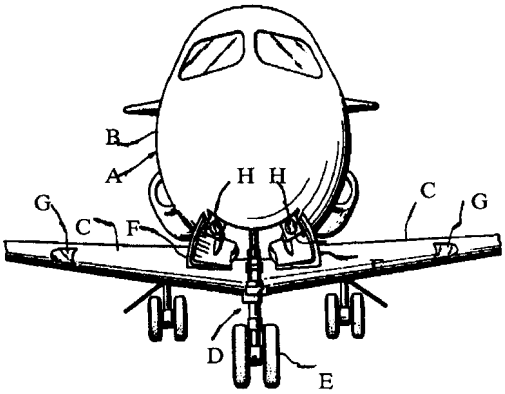

A - Aircraft; B - Fuselage; C - Wings; D - Landing gear assembly; E - Wheels; F - Landing gear doors (front); G - Wing mounted lights; H - Retractable landing gear lights

SEE OR SEARCH THIS CLASS, SUBCLASS:

523+, for an adjustable lamp or lamp support.

473 Bicycle or motorcycle:

This subclass is indented under subclass 459. Subject matter wherein the illuminating means is especially adapted for (1) a vehicle having two wheels one behind the other, a steering handle, and a saddle seat or seats and usually propelled by the action of the rider's feet upon pedals, or (2) a two-wheeled self-propelled vehicle having one or two riding saddles and usually propelled by a gasoline engine.

(1) Note. The subject matter of this subclass includes nominally recited light sources as well as light units or elements of the light unit, such as an optical light modifier or a light casing support for a light, per se.

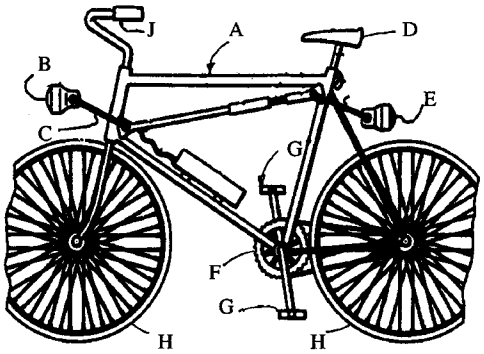

A - Bicycle frame; B - Headlamp; C - Lamp support; D - Seat; E - Rear lamp; F - Bracket; G - Pedals; H - Pair of wheels; J - Handle

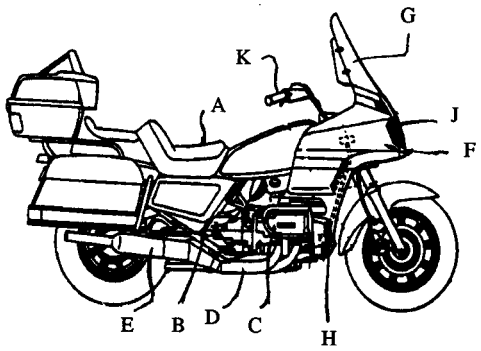

A - Motorcycle; B - Main frame; C - Engine; D - Exhaust pipe; E - Muffler; F - Main frame cover; G - Windshield cover; H - Supplementary light; J - Headlight; K - Steering handle

SEE OR SEARCH THIS CLASS, SUBCLASS:

193, for a bicycle wheel driven generator.

396, for a support to attach a lamp to a bicycle.

SEE OR SEARCH CLASS:

74, Machine Element or Mechanism, subclasses 551.1+ for a bicycle handlebar and subclasses 594.1+ for a bicycle crank and pedals where no light source is involved.

224, Package and Article Carriers, subclasses 30+ for a bicycle carrier in general.

280, Land Vehicles, subclasses 200+ for a bicycle, and subclasses 847+ for a bicycle dust and mud guard.

310, Electrical Generator or Motor Structure, subclass 67 for a bicycle hub generator, and subclasses 152+ for a permanent magnet machine.

315, Electric Lamp and Discharge Devices: Systems, subclasses 77+ for a vehicle lamp and discharge device system.

340, Communications: Electrical, subclass 432 for a bicycle alarm or indication.

474 Handlebar:

This subclass is indented under subclass 473. Subject matter wherein the bicycle or the motorcycle comprises a shaped rod that forms part of a bicycle's or motorcycle's steering mechanism and having a hand grip thereon and wherein the illuminating means includes light modifying means other than the headlight and the light modifying means either (1) is detachably mounted on the shaped rod or (2) illuminates the hand grip on the shaped rod.

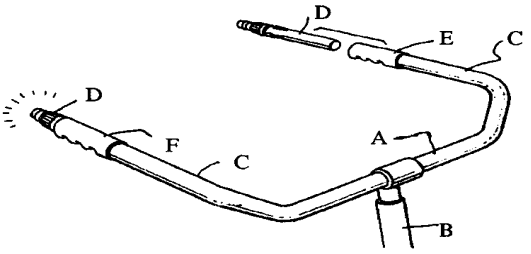

A - Headlamp; B - Steering post; C - Left & right hollow arms; D - Light units; E, F - Hand grip sleeves

SEE OR SEARCH CLASS:

74, Machine Element or Mechanism, subclasses 551.1+ for a bicycle handlebar in general.

224, Package and Article Carriers, subclass 30 for a handlebar attached package or article carrier; subclass 41 for a handlebar supported bracket.

475 Headlight:

This subclass is indented under subclass 473. Subject matter wherein a lamp is mounted in front of the bicycle or motorcycle and the lamp comprises a light bulb, a reflector disposed behind the light bulb, a light casing accommodating the light bulb and the reflector, and a lens attached in the front face of the light casing for illuminating the surface on which the wheel is moving.

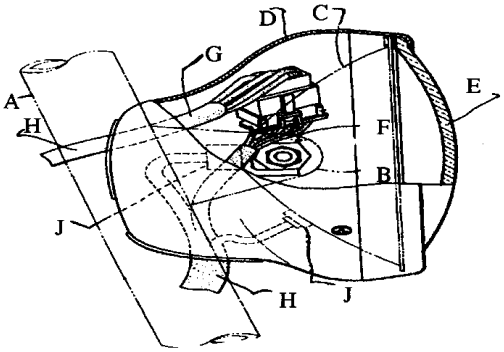

A - Motorcycle front fork; B - Brackets; C - Reflector; D - Headlight casing; E - Front lens; F - Supporting member; G - Wiring coupler; H - Input-output wiring harness; J - Headlight sockets

SEE OR SEARCH THIS CLASS, SUBCLASS:

285, for an adjustable or repositionable light source.

296, for a light source and a modifier including a reflector.

476 Headlight support:

This subclass is indented under subclass 475. Subject matter including structural means in which the lamp is positioned with respect to some reference point or reference structure.

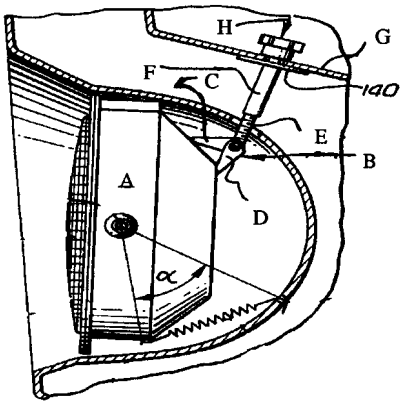

A - Headlamp; B, C, D - Support bracket assembly; E, F - Support rod; G - Support plate; H - Adjustable knob

SEE OR SEARCH THIS CLASS, SUBCLASS:

382+, for a support in general.

396, for a clamp or hook.

418+, for an adjustable light support including mounting means.

523+, for an adjustable lamp or lamp support.

SEE OR SEARCH CLASS:

248, Supports, subclasses 327+ for a vertically suspended support.

439, Electrical Connectors, subclasses 527+ for an electrical connector with a supporting structure.

477 Marine:

This subclass is indented under subclass 459. Subject matter wherein the transporting support comprises a watercraft and the illuminating means is especially adapted for imparting light to different parts of the watercraft.

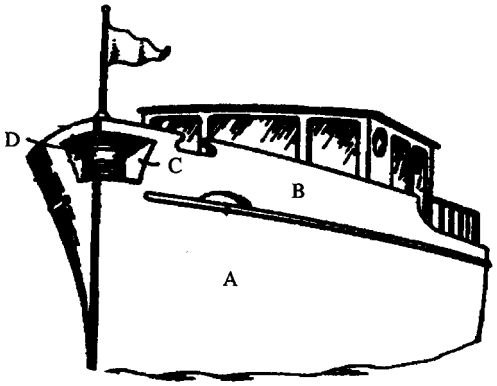

A - Vesser hull; B - Bullwork; C - Opening for light; D - Headlight

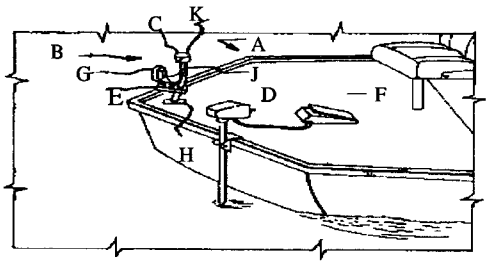

A - Boat; B - Multiple light system; C - Mast-mounted light assembly; D - Bow; E - Light assembly mounting means; F - Deck; G - Auxiliary or additional light; H - Light mast mounting plate; J - Tubular mast or standard; K - Mast-mounted navigation light

SEE OR SEARCH CLASS:

114, Ships, subclasses 343+ for a boat, boat component, or attachment in general and subclass 66 for an observation ship having the means to illuminate the object or field.

340, Communications: Electrical, subclasses 984+ for a watercraft alarm or indicating system.

441, Buoys, Rafts, and Aquatic Devices, subclasses 13+ for a buoy with a illuminated signalling device.

478 Bus or railway rolling stock:

This subclass is indented under subclass 459. Subject matter wherein the transporting means is either (1) a vehicle which is motor driven and designed to carry passengers usually according to a schedule along a fixed route or (2) a wheeled transportation equipment for a runaway or track formed of rails laid usually in two parallel lines.

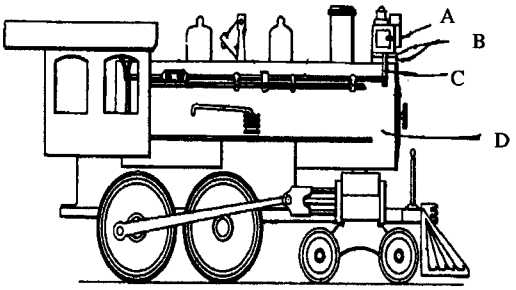

A - Headlight (movable); B - Movable support base; C - Crank handle; D - Locomotive

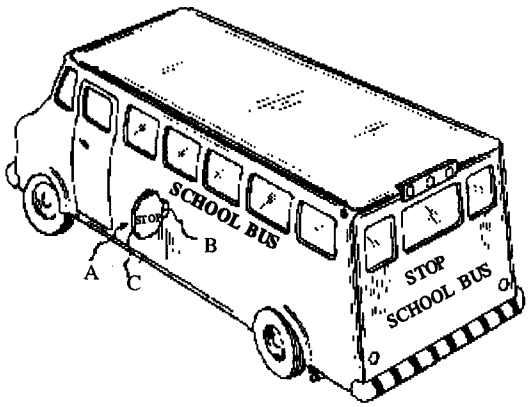

A - Stop sign light unit; B - Support bracket; C - Lighting system with plurality of lights

SEE OR SEARCH CLASS:
191, Electricity: Transmission to Vehicles, subclasses 50+ for a trolley in general.

479 Roof or ceiling:
This subclass is indented under subclass 478. Subject matter especially adapted for a top outside cover of the bus or railway rolling stock or the underside of the top cover of the bus or railway rolling stock.

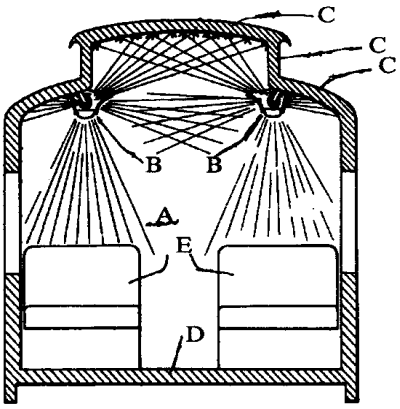

A - Train; B - Lighting fixtures; C - Roof or ceiling; D - Floor; E - Seats

SEE OR SEARCH CLASS:
105, Railway Rolling Stock, subclasses 329.1+ for a passenger car body in general.
224, Package and Article Carriers, subclass 29.5 for a vehicle-attached article carrier (e.g., railway).

480 Ventilation casing or fixture:
This subclass is indented under subclass 479. Subject matter wherein the bus or railway rolling stock comprises an overhead air duct, an aisle, and passenger seats and the illuminating means is supported by the overhead air duct or air distributing means and the air duct or air distributing means direct light down on an aisle or passenger seat.

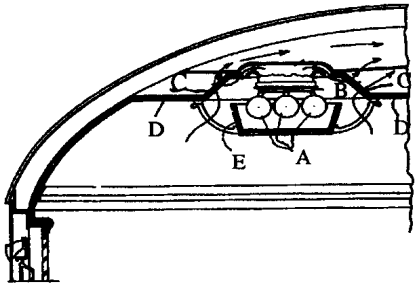

A - Lamps; B - Lamp support; C - Ventilating air passage; D - Roof frame; E - Lamp shade

SEE OR SEARCH THIS CLASS, SUBCLASS:
149, for a building ceiling light with air or fluid handling means.

SEE OR SEARCH CLASS:
454, Ventilation, subclass 83 for a ventilation system for a railcar, bus, or trailer in general, subclasses 108+ for a specific air distributor, subclasses 136+ for a vehicle roof structure in general, and subclasses 292+ for a ceiling-type inlet airway in general.

481 Threshold illumination:
This subclass is indented under subclass 478. Subject matter wherein the bus or railway rolling stock comprises a step, an entrance, or a side and the illuminating means is especially adapted to distribute the light along the step, entrance, or side of the bus or railway rolling stock.

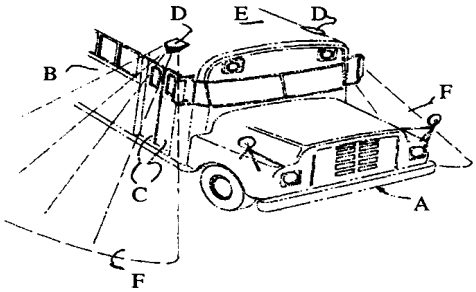

A - Bus; B - Body of bus; C - Hinged doors; D - Light housing; E - Roof; F - Light beam

SEE OR SEARCH THIS CLASS, SUBCLASS:

495, for illuminating means combined with a running board.

482 Dashboard:

This subclass is indented under subclass 478. Subject matter including illuminating means supported on an outside panel member extending across the front of the bus or railway rolling stock to obtain proper lighting of the railroad track.

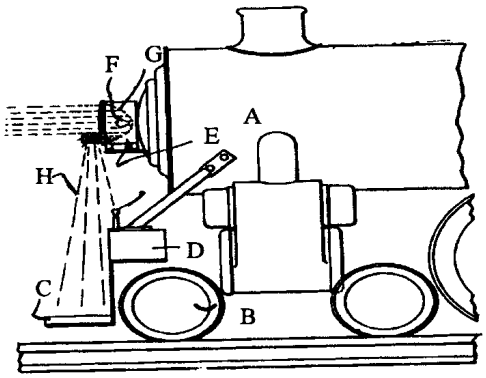

A - Locomotive; B - Bumper beam; C - Step or dashboard; D - Hand rail; E - Headlight; F - Light source; G - Reflector; H - Light beam to dash board

SEE OR SEARCH THIS CLASS, SUBCLASS:

489, for an automotive interior dashboard light.

SEE OR SEARCH CLASS:

180, Motor Vehicles, subclass 90 for a dashboard in general.

483 Seat:

This subclass is indented under subclass 478. Subject matter wherein the illuminating device is adapted for illuminating a bench or chair designed specifically for use in a bus or railway rolling stock to support one or more persons during the movement of the bus or railway rolling stock.

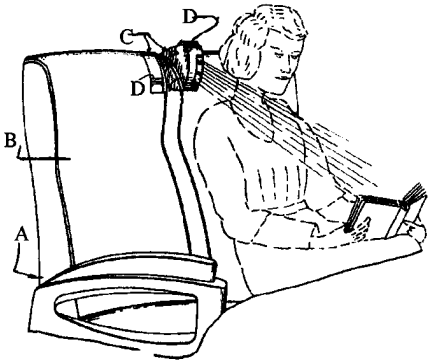

A - Vehicle seat; B - Backrest; C - Light fixture; D - Light manipulating handle

484 Baggage Rack:

This subclass is indented under subclass 478. Subject matter wherein the bus or railway rolling stock comprises a shelf used for storing the personal belongings of a person in transit and the illuminating means is supported by the shelf.

(1) Note. The illuminating means of this subclass type may be integral with or separable from the shelf.

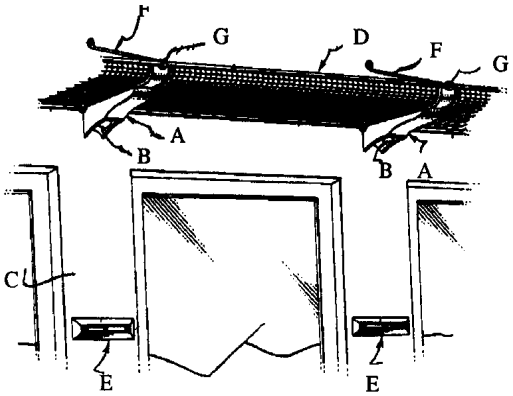

A - Light fixture; B - Light source; C - Railroad car wall; D - Baggage rack; E - Reflector; F, G - Rack support

SEE OR SEARCH CLASS:

224, Package and Article Carriers, subclasses 273+ for a vehicle-attached package or article carrier in general.

485 Truck, trailer, or wagon:

This subclass is indented under subclass 459. Subject matter wherein the illuminating means is especially adapted for (1) an automotive wheeled vehicle built for the transportation of goods or a heavy article on its own chassis (i.e., a truck), or (2) a nonautomotive highway or industrial plant vehicle designed to be hauled by a motor truck, tractor, or passenger automobile (i.e., a trailer), or (3) a heavy four-wheel vehicle, usually uncovered, designed especially for transporting bulky material and drawn originally by an animal but often by a motor vehicle (i.e., a wagon).

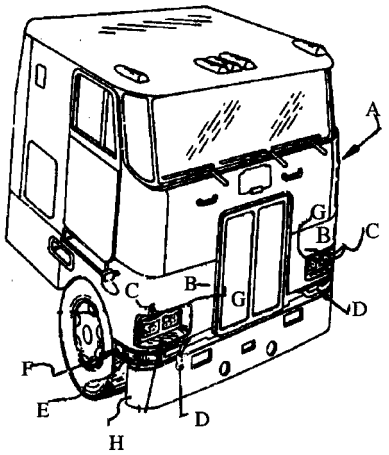

A - Truck tractor; B - Front shirt; C - Headlamps; D - Turn signal; E - Reflector; F - Side marker light; G - Lamp housing; H - Bumper

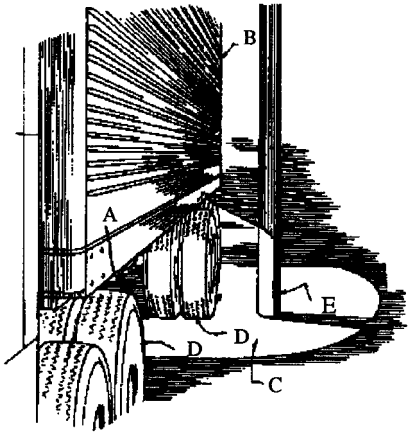

A - Light unit; B - Trailer; C - Rear wheels; D - Area illuminated by light unit `A'; E - Street curb or obstruction

SEE OR SEARCH CLASS:

180, Motor Vehicles, subclass 89.12 for a tractor or similar vehicle cab in general, and subclass 90 for a dashboard in general.

280, Land Vehicles, digest 8 for a separable body or container-type semi-trailer in general.

296, Land Vehicles: Bodies and Tops, subclass 190 for a operator's cab in general, and subclasses 210+ for a roof structure in general.

486 Portable:

This subclass is indented under subclass 459. Subject matter comprising a self-contained illuminating means capable of being easily and conveniently moved from one location to another.

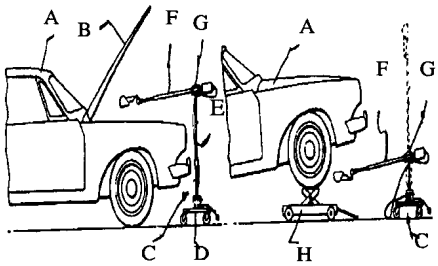

A - Automobile; B - Hood; C - Portable lamp; D - Lamp base; E - Lamp standard; F - Pivoted arm; G - Pivot; H - Jack

SEE OR SEARCH THIS CLASS, SUBCLASS:

652, for a quick disconnect-type light unit.

SEE OR SEARCH CLASS:

280, Land Vehicles, subclass 32.6 for a repairman's creeper.

487 Automobile:

This subclass is indented under subclass 459. Subject matter including illuminating means especially adapted for a four-wheeled automotive vehicle or a motor car designed for passenger transportation on a street or roadway and usually propelled by an internal-combustion engine using a volatile fuel (e.g., gasoline).

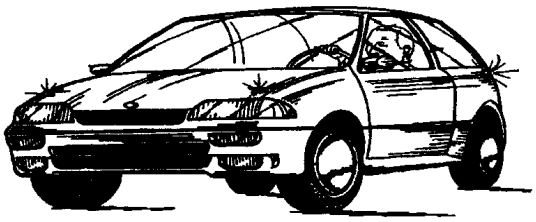

488 Interior:
This subclass is indented under subclass 487. Subject matter including illuminating means mounted on the inside of an automobile.

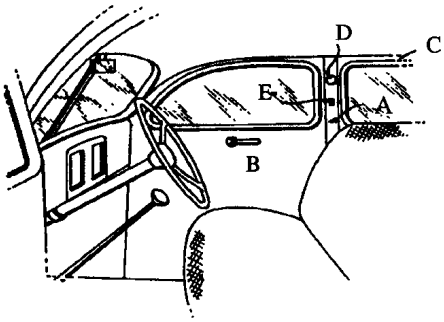

A - Door post; B - Front door; C - Rear door window; D - Door post light; E - Light switch

489 Dashboard:
This subclass is indented under subclass 488. Subject matter wherein the automobile comprises an instrument board panel extending across an automobile below the windshield, usually containing dials, controls, and accessories, and the illumination means facilitates the viewing of the panel.

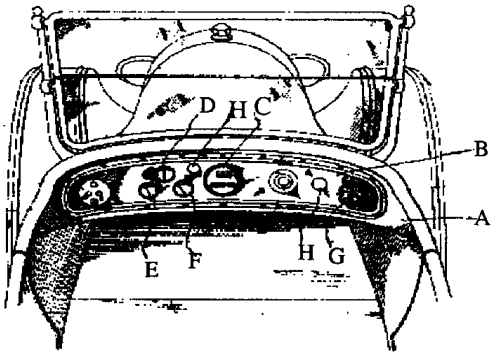

A - Dashboard; B - Instrument board; C, D, E, F, G - Indicating instruments; H - Instrument board lamps

SEE OR SEARCH THIS CLASS, SUBCLASS:
482, for a bus or railway rolling stock dashboard illumination means.

490 Ceiling:
This subclass is indented under subclass 488. Subject matter including illuminating means adapted for installation on the underside of the roof of the automobile.

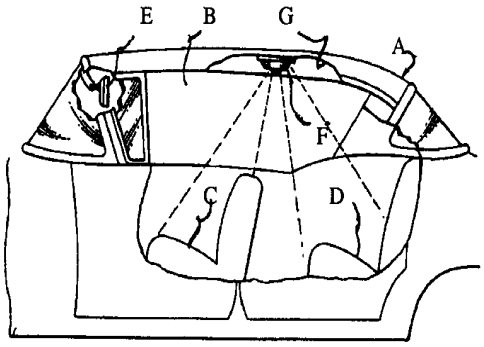

A - Vehicle; B - Passage compartment; C - Front seat; D - Rear seat; E - Rear view mirror; F - Ceiling lamp; G - Ceiling

SEE OR SEARCH THIS CLASS, SUBCLASS:
479, for a light source adapted for a bus or railway rolling stock roof or ceiling.

SEE OR SEARCH CLASS:
296, Land Vehicles: Bodies and Tops, subclasses 210+ for a roof structure in general, and subclass 215 for a roof structure having a light-transmitting means.

491 Gearshift:
This subclass is indented under subclass 488. Subject matter especially adapted to illuminate a bar of metal or other rigid substance used to exert a pressure to engage or disengage a toothed wheel to perform a vehicle transmission.

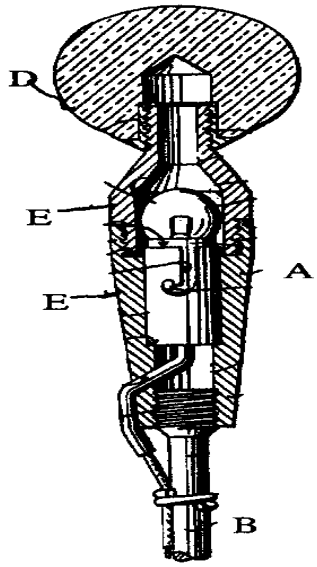

A - Illuminated head; B - Rear shift lever; C - Light bulb; D - Knob; E - Tubular housing

SEE OR SEARCH THIS CLASS, SUBCLASS:

474, for illuminating means adapted for a bicycle handlebar.

SEE OR SEARCH CLASS:

74, Machine Element or Mechanism, subclass 523 for a hand operated lever in general, and subclasses 543+ for a control handle in general.

116, Signals and Indicators, subclass 28.1 for a transmission indicator.

492 Sun visor or vanity mirror:

This subclass is indented under subclass 488. Subject matter including illuminating means especially adapted for a polished or smooth substance forming an image by the reflection of light used for makeup and supported by a projecting front piece on a windshield to protect the eyes from glare or an overhang to give shade.

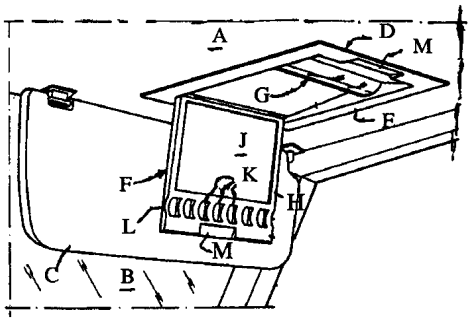

A - Ceiling; B - Windshield; C - Sun visor; D - Flush mounted shell; E - Frame; F - Mirror unit; G - Illuminating unit; H - Panel; J - Mirror; K - Light emitting slots; L - Screen; M - Recesses to flip down mirror

SEE OR SEARCH THIS CLASS, SUBCLASS:

135+, for a light source used with a viewing mirror.

SEE OR SEARCH CLASS:

248, Supports, subclasses 466+ for a mirror or picture-type support in general.

296, Land Vehicles: Bodies and Tops, subclass 97.1 for a glare screen or visor.

359, Optics: Systems (Including Communication) and Elements, subclasses 872+ for a mirror movable relative to a support in general.

493 Roof:

This subclass is indented under subclass 487. Subject matter wherein the automobile comprises a top cover and a windshield and the illumination means is positioned on the top cover of the automobile above the windshield.

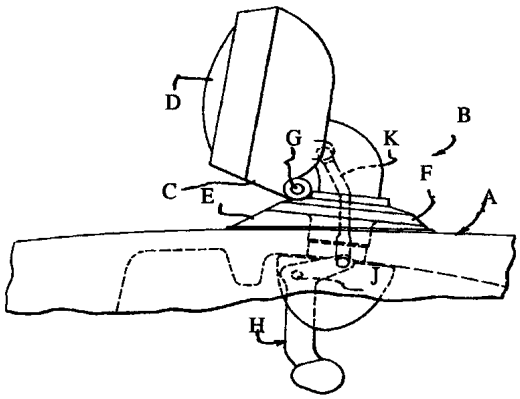

A - Roof; B - Light assembly; C - Lamp housing; D - Lamp; E - Base housing; F - Mounting plate; G - Pivot; H - Handle; J - Pivot; K - Linkage

SEE OR SEARCH CLASS:

224, Package or Article Carriers, subclasses 309+ for a carrier associated with a vehicle roof in general.

494 Rear view mirror:

This subclass is indented under subclass 487. Subject matter wherein the illuminating means is positioned on a polished or smooth substance forming an image used for sighting an object approaching from behind the automobile.

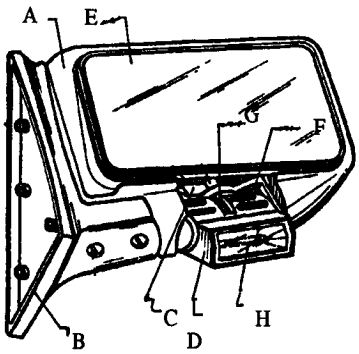

A - Back mirror case; B - Pillar; C - Mechanism to drive illumination light; D - Illumination light; E - Back mirror; F - Support frame; G - Guiding member; H - Light bulb

SEE OR SEARCH THIS CLASS, SUBCLASS:

135+, for a viewing mirror in general.

492, for a sun visor or vanity mirror.

SEE OR SEARCH CLASS:

340, Communications: Electrical, subclasses 475+ for a land vehicle turn signal light system, subclasses 760+ for a solid body light emitter visual display system, and subclasses 815.01+ for a visual indicator.

359, Optics: Systems (Including Communication) and Elements, subclasses 601+ for a glare or unwanted light reduction with mirror, subclasses 838+ for a vehicle mirror, and especially subclasses 871+ for a mirror with a support.

495 Running board:

This subclass is indented under subclass 487. Subject matter wherein the illumination means is adapted to be mounted on a footboard or a threshold of the automobile to illuminate the footboard or threshold.

(1) Note. The illuminating means may illuminate an area to the side of the automobile, the footboard itself, or the vicinity of the footboard.

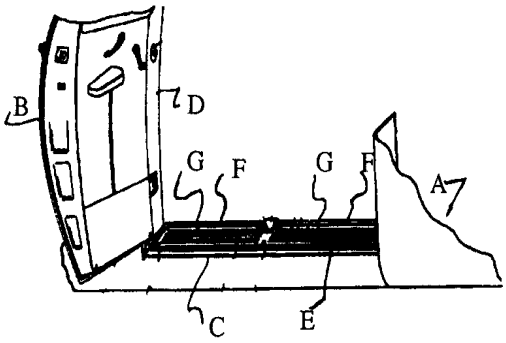

A - Vehicle body; B - Door; C - Running board; D - Door post; E - Corrugated plate; F - Elongated slots; G - Light transmitting rods

SEE OR SEARCH CLASS:

180, Motor Vehicles, subclass 90.6 for a footboard and pedal guard of a motor vehicle in general.

280, Land Vehicles, subclasses 163+ for a step attachment of a wheeled vehicle in general.

496 Hood, grill, or trunk:

This subclass is indented under subclass 487. Subject matter wherein the automobile comprises an engine compartment, an ornamental metal screen at the front of the automobile covering the radiator core, or a luggage compartment, as well as a body part covering these compartments brightened by the illuminating means.

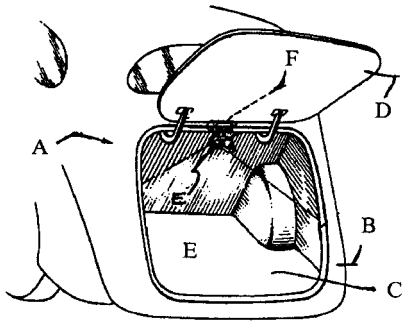

A - Car body; B - Rear panel; C - Trunk; D - Trunk door; E - Illuminating means; F - Support bracket

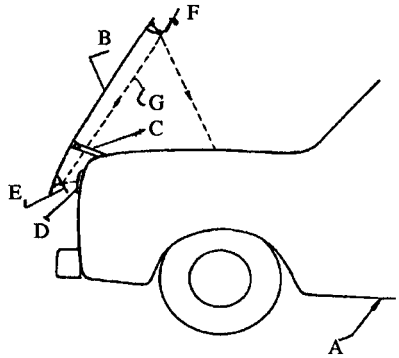

A - Vehicle; B - Hood; C - Pivotal bracket; D - Headlights; E, F - Mirrors; G - Light beam path

SEE OR SEARCH THIS CLASS, SUBCLASS:
480, for a ventilation casing or fixture.
502, for a radiator or radiator cap.

SEE OR SEARCH CLASS:
180, Motor Vehicles, subclasses 69.2+ for a hood in general.
292, Closure Fasteners, digest 14 for a hood latch in general.
296, Land Vehicles: Bodies and Tops, subclasses 37.1+ for a auxiliary article compartment in general, and subclasses 146+ for a door or window having specified vehicle features in general.

497 License plate:
This subclass is indented under subclass 487. Subject matter wherein the automobile comprises a flat, thin, smooth, usually rectangular piece of metal having a automobile identification name or numbers brightened by the illuminating means.

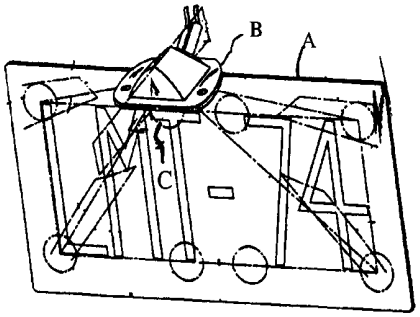

A - License plate; B - Lamp; C - Light source

SEE OR SEARCH CLASS:
40, Card, Picture, or Sign Exhibiting, subclasses 204+ for a illuminated license plate.

498 Turn signal indicator:
This subclass is indented under subclass 497. Subject matter wherein the illuminating means comprises a light source to indicate the direction in which the automobile is about to turn.

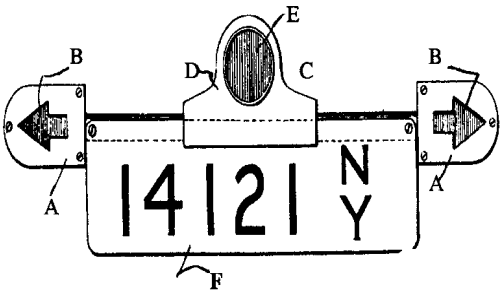

A - Signal lamps; B - Turn signal; C - License plate lamp; D - Lamp casing; E - Light source; F - License plate

SEE OR SEARCH THIS CLASS, SUBCLASS:
540+, for a turn signal light.

SEE OR SEARCH CLASS:
40, Card, Picture, or Sign Exhibiting, subclasses 541+ for a illuminated sign in general, and especially subclasses 553+ for a vehicle light having multiple functions.

340, Communications: Electrical, subclasses 815.06+ for a visual indicator having a transparent display element; and subclasses 475+ for a land vehicle turn signal light system.

499 Including brake or emergency:
This subclass is indented under subclass 498. Subject matter wherein the illuminating means comprises a light source to indicate intended movement or stoppage of the automobile.

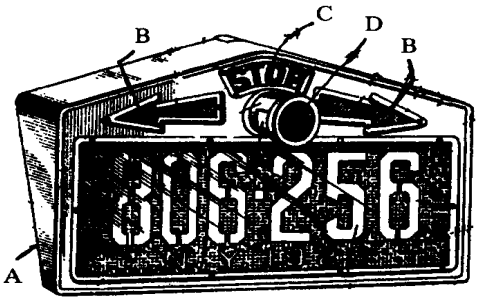

A - License plate; B - Turn signals; C - Brake or emergency; D - Lamp

SEE OR SEARCH CLASS:
40, Card, Picture, or Sign Exhibiting, subclasses 553+ for a vehicle light having multiple functions.
340, Communications: Electrical, subclass 479 for a external brake light system.

500 Wheel spindle, axle, or hub cap:
This subclass is indented under subclass 487. Subject matter wherein the automobile comprises a long usually tapered rod supporting the wheel, a shaft supporting the wheel, or a usually cylindrical central part of the wheel, for supporting the illuminating means.

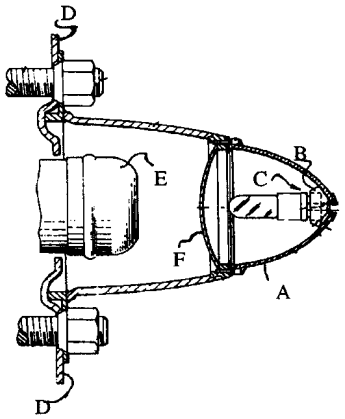

A - Lens; B - Bearing support; C - Light assembly; D - Wheel hub; E - Grease cap; F-Reflector

SEE OR SEARCH THIS CLASS, SUBCLASS:
42, for a tire, wheel, or brake backing plate movement lamp.
806+, for a ornamental or decorative light source.

SEE OR SEARCH CLASS:
40, Card, Picture, or Sign Exhibiting, subclass 587 for a tire or wheel sign.

501 Door or door handle:
This subclass is indented under subclass 487. Subject matter wherein the automobile comprises (1) a movable piece of firm material or a structure supported usually along one side and swinging on pivots or hinges, by means of which an opening may be closed or kept open for a passage into an automobile and (2) a part on the movable opening or closing the movable piece and the illuminating means piece that is designed especially to be grasped by the hand and is supported on the movable piece or the part.

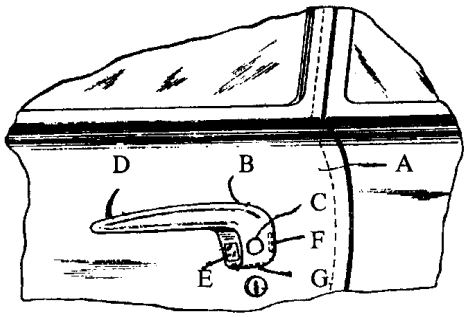

A - Car door; B - Door handle; C - Light source; D - Handle part; E, F, G - Open with transparent glass

SEE OR SEARCH THIS CLASS, SUBCLASS:

94, for a door-controlled switch of a heater or refrigerator.

100, for a door knob or key hole illuminator.

SEE OR SEARCH CLASS:

16, Miscellaneous Hardware, subclasses 110+ for a handle in general.

296, Land Vehicles: Bodies and Tops, subclasses 146+ for a door or window with a special vehicle feature in general.

502 Radiator:

This subclass is indented under subclass 487. Subject matter wherein the automobile comprises a heat exchange member consisting of an assembly of sheets or tubes, called a core, used for transferring heat for a liquid cooled internal combustion engine and the illuminating means is supported by the heat exchange means.

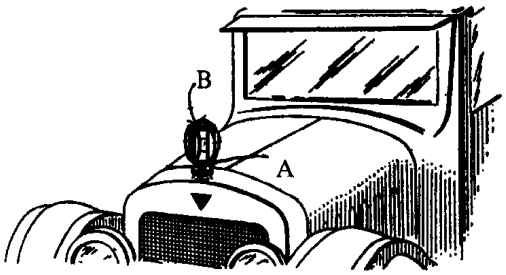

A - Radiator cap; B - Lamp

SEE OR SEARCH THIS CLASS, SUBCLASS:

25, for a radiator water temperature meter having an illuminated scale or dial.

SEE OR SEARCH CLASS:

40, Card, Picture, or Sign Exhibiting, subclass 591 for an automotive vehicle carried sign.

180, Motor Vehicles, subclasses 68.4+ for a radiator or condenser mounting in general.

222, Receptacles, digest 32 for a radiator cap in general.

503 Windshield or window:

This subclass is indented under subclass 487. Subject matter wherein the automobile comprises (1) a transparent glass screen forming the upper front of the automobile compartment or (2) a transparent glass cover, usually to admit light, on the side or rear of the automobile and the illuminating means is supported by the screen or the cover.

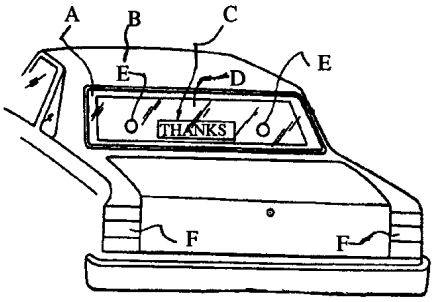

A - Rear window; B - Vehicle; C - Illuminating means; D - Window screen; E - Signal indicators (additional); F - Tail lights

SEE OR SEARCH THIS CLASS, SUBCLASS:

541, for a window-mounted brake light.

SEE OR SEARCH CLASS:

296, Land Vehicles: Bodies and Tops, subclasses 84.1+ for a windshield in general, and subclasses 97.1+ for a glare screen or visor in general.

504 Including adjustable lamp support:
This subclass is indented under subclass 503. Subject matter wherein the significance is attributed to repositionable means for holding the illuminating device on the windshield or window.

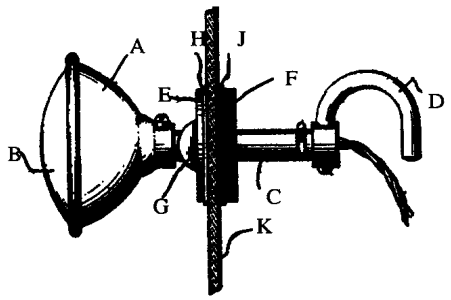

A - Lamp; B - Lens; C - Stem; D - Handle; E - Mounting ring; F - Retaining ring; G - Bearing portion ring "E"; H, J, - Friction washers; K - Windshield. Note: Mounting ring "E" is free to be turned by manipulating of stem "C" through handle "D".

SEE OR SEARCH THIS CLASS, SUBCLASS:
269+, for a tiltable or rotatable light source and modifier.
285+, for an adjustable or repositionable light source support.
523+, for an adjustable lamp or lamp support.

SEE OR SEARCH CLASS:
248, Supports, subclasses 274+ for an adjustable bracket.
403, Joints and Connections, subclasses 76+ for a ball and socket articulated joint.

505 Bumper or bumper guard:
This subclass is indented under subclass 487. Subject matter wherein the automobile comprises (1) a device, usually a metal bar or a grill made of heavy duty composite material for absorbing shock and lessening or preventing damage in a collision or impact to the automobile body or (2) a shoe attachment connected to an automobile device for preventing locking of the device with another automobile and the illuminating means is supported by the device or the shoe attachment.

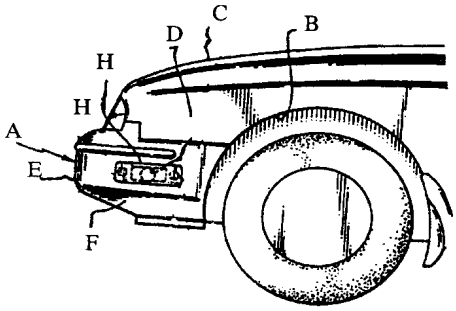

A - Bumper; B - Wheel housing; C - Car body; D - Fender panel; E - Bumper facer; F - Bumper side section; G - Lamp mounting hole; H - Lamp

SEE OR SEARCH CLASS:
213, Railway Draft Appliances, subclasses 220+ for a car-end bumper or buffer in general.
293, Vehicle Fenders, subclasses 102+ for a buffer or bumper, subclasses 120+ for a composite bumper, and subclasses 142+ for a bumper guard in general.

506 Fender:
This subclass is indented under subclass 487. Subject matter wherein the automobile comprises a mud guard or protective covering made of metal or high-strength composite material over a wheel of an automobile and the illuminating means is supported on the guard or the protective covering.

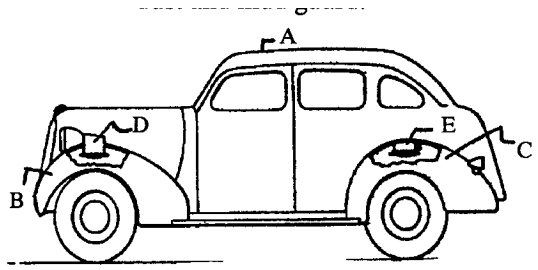

A - Automobile; B - Front fender; C - Rear fender; D - Lamp; E - Lamp

SEE OR SEARCH CLASS:
280, Land Vehicles, subclasses 847+ for a dust and mud guard.

507 Headlight:
This subclass is indented under subclass 506. Subject matter including a lamp mounted on the fender for illuminating the road ahead.

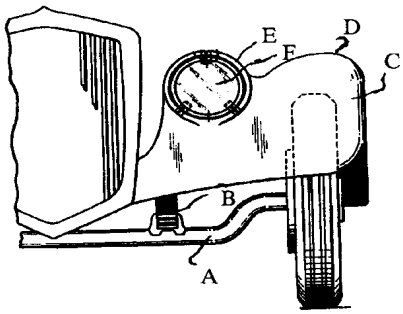

A - Axle; B - Spring; C, D, E - Fender structure; F - Headlight

508 Adjustable source (e.g., bulb filament):
This subclass is indented under subclass 459. Subject matter wherein the illuminating means includes either an incandescent light bulb or a gas discharge light bulb having an internal element which is movable relative to a light modifier permitting adjustment of the illuminating means.

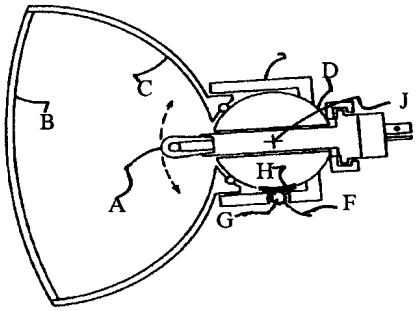

A - Light source; B - Lens; C - Reflector; D - Adjustment ball; F, G, H - Rack and pinion assembly; J - Adjustment ball axis

SEE OR SEARCH THIS CLASS, SUBCLASS:
232, for a relative movement of a source and the modifier.
233, for a remote adjustment or positioning means for a light source.
285+, for an adjustable or repositionable light source.

509 Light modifier:
This subclass is indented under subclass 459. Subject matter including means to alter the distribution or composition of light emitted from the illuminating means by reflecting, refracting, or partially or completely absorbing the light.

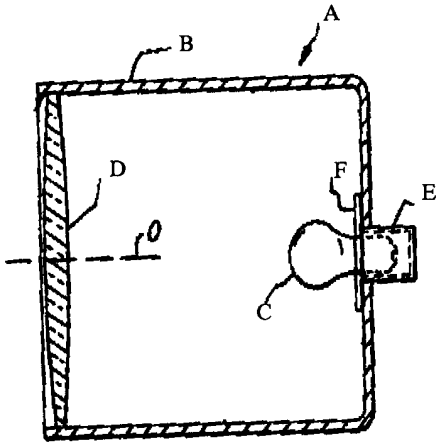

A - Headlamp; B - Lamp housing; C - Light bulb or source; D - Convex lens; E - Electrical socket connected to automobile electrical system; F - Mounting bracket

SEE OR SEARCH THIS CLASS, SUBCLASS:
290+, for a louvered or grid-type modifier.
293, for a selected wavelength modifier.
317+, for a light modifier in general.

SEE OR SEARCH CLASS:
296, Land Vehicles: Bodies and Tops, subclasses 97.2+ for a glare screen with specific structure or properties for diffusing or reflecting light.
359, Optics: Systems (Including Communication) and Elements, subclasses 601+ for a glare or unwanted light reduction in general, and subclasses 885+ for an absorption filter in general.

510 Including selected wavelength modifier:
This subclass is indented under subclass 509. Subject matter comprising a filter to partially absorb or reflect some or all of the light from the illuminating means and alter its energy spectrum.

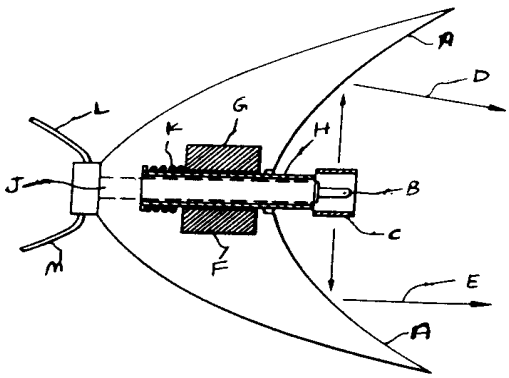

A - Reflector; B - Light source; C - Filter to filter out visible light and transmit ultraviolet light; D - Arrow represents light passed from the light source through filter; E - Arrow represents light emitted by the light source without passing through the filter; F, G, H - Filter operating device in the form of draw magnet; J - Light source attachment; K - Spring to displace filter positions; L - Conductor through which current is delivered to draw magnet; M - Conductor through which current is delivered to light source

SEE OR SEARCH THIS CLASS, SUBCLASS:

214, for a mask or screen for a light filament.

290+, for a louvered or grid-type modifier.

293, for a filter-type selected wavelength modifier.

SEE OR SEARCH CLASS:

296, Land Vehicles: Bodies and Tops, subclasses 97.1+ for a glass screen or visor with specific structure or property for diffusing or reflecting light.

313, Electric Lamp and Discharge Devices, subclass 112 for a polarizer or filter, and subclasses 113+ for a reflector-type optical device or a special ray transmissive envelope.

356, Optics: Measuring and Testing, subclasses 402+ for an optical system using shade or color.

359, Optics: Systems (Including Communication) and Elements, subclasses 601+ for a glare or unwanted light reduction means.

511 Optical waveguide (e.g., fiber optic, edge-lit):

This subclass is indented under subclass 509. Subject matter including an object made of light transmitting material having a relatively narrow surface or side disposed adjacent to a light source, or a transparent, relatively elongated surface transmitting light rays from one point to another within the confines of its outer surface or surfaces by internal reflections, or a high brightness light source coupled to fiber-optic light conductors to provide forward illumination.

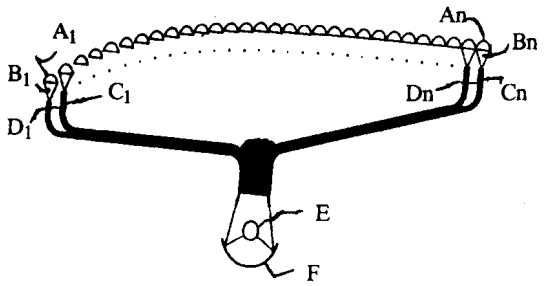

A_1 An - Plurality of lens; B_1 Bn - Light output; C_1 Cn - Fiber optics; D_1 Dn - Fiber optics; E - High intensity light source; F - Reflector

SEE OR SEARCH THIS CLASS, SUBCLASS:

26+, for an edge illuminated modifier or light rod or pipe.

32, for a light fiber, rod, or pipe.

615, for an edge-lighted panel.

SEE OR SEARCH CLASS:

40, Card, Picture, or Sign Exhibiting, subclass 544 for a electroluminescent illuminated sign.

313, Electric Lamp and Discharge Devices, subclasses 514+ for a character display in a gas discharge medium.

385, Optical Wave Guides, subclass 19 for a stationary waveguide with a movable opaque element.

512 Adjustable or positionable:

This subclass is indented under subclass 509. Subject matter wherein the light modifier (1) acts on a light beam produced by a light source and (2) is movable to alter the direction or con-

tent of the light beam (e.g., adjusting or moving height or direction of the light beam).

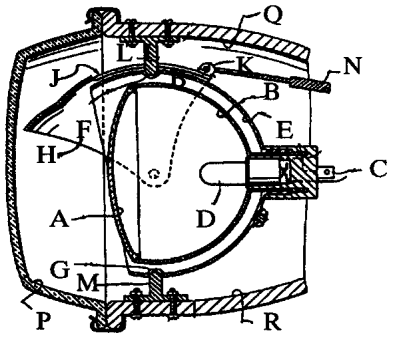

A -Lens; B -Reflex mirror; C -Terminal; D -Light source or bulb; E -Bulb receiver; F, G - Pivot suspension; H - Adjustable cover (turns upward and downward over bulb receiver "E"); J - Slot; K - Bracket; L, M - Pivot; N - Working bar; P - Lens; Q, R - Inner walls of housing

SEE OR SEARCH THIS CLASS, SUBCLASS:

269+, for a tiltable or rotatable light source or modifier.

277+, for an adjustable or repositionable modifier.

285+, for an adjustable or repositionable light source or light source support.

319+, for an adjustable or repositionable light modifier.

SEE OR SEARCH CLASS:

49, Movable or Removable Closures, subclasses 139+ for a closure optionally moved by a motor, and subclasses 248+ for a closure mounted for multidirectional movement.

513 Electric or fluid-pressure actuated:

This subclass is indented under subclass 512. Subject matter wherein the light beam is movable or positionable by electric, hydraulic, or pneumatic means.

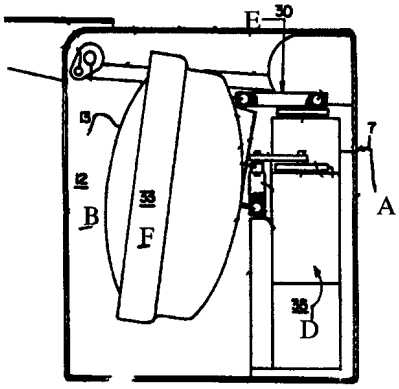

A - Enclosure; B - Housing cavity; C - Headlight; D - Electric motor; E - Rotation assembly; F - Headlight frame

SEE OR SEARCH THIS CLASS, SUBCLASS:

272, for a light source and modifier being tiltable or rotatable by electric or pneumatic means.

284, for an angularly adjustable or repositionable modifier with actuator.

324, for a modifier movable with respect to its base or support by means of an actuator.

SEE OR SEARCH CLASS:

49, Movable or Removable Closures, subclasses 139+ for a closure which may be optionally moved by a motor.

315, Electric Lamp and Discharge Devices, subclass 84, for a door- or closure-controlled load device.

514 Reflector:

This subclass is indented under subclass 512. Subject matter wherein the adjustable or positionable means is a bowl-shaped device usually made of a polished metal or plastic for redirecting light back into a medium.

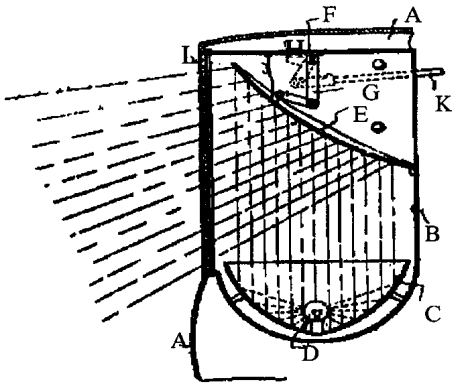

A - Fender or wheel guard; B - Lamp housing; C - Reflector; D - Bulb or light source; E - Plate reflector (Adjustable or positionable); F - Shaft; G - H, Links; J - Pivot lug; K - Adjusting rod; L - Lens

SEE OR SEARCH THIS CLASS, SUBCLASS:
277+, for an adjustable or repositionable modifier.
319+, for an adjustable or positionable light modifier.

515 Having ball and socket mechanism:
This subclass is indented under subclass 514. Subject matter wherein (1) the adjustable reflector includes (A) a spherical bearing surface, and (B) a holder or outer member conforming to the bearing surface and enclosing the bearing surface, and (2) the bearing surface and either the holder or the outer member have a relative movement with respect to each other.

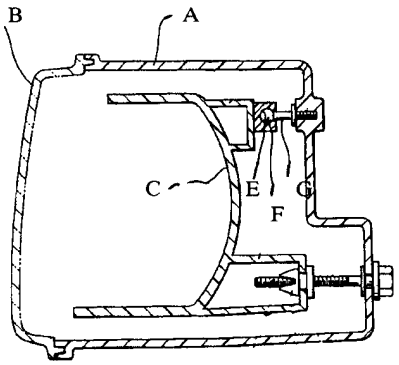

A - Lamp body; B - Lens; C - Adjustable reflector; E, F, G - Ball and socket mechanism

SEE OR SEARCH THIS CLASS, SUBCLASS:
282+, for an angularly adjustable modifier.
322+, for an angularly or rotatably adjustable modifier.
421, for a ball and socket light support.

SEE OR SEARCH CLASS:
248, Supports, subclasses 181+ for a stand having a ball and socket joint.
403, Joints and Connections, subclasses 52+ and 122+ for a ball and socket joint.

516 Reflector structure:
This subclass is indented under subclass 509. Subject matter wherein the significance is attributed to the surface configuration of the bowl-shaped device.

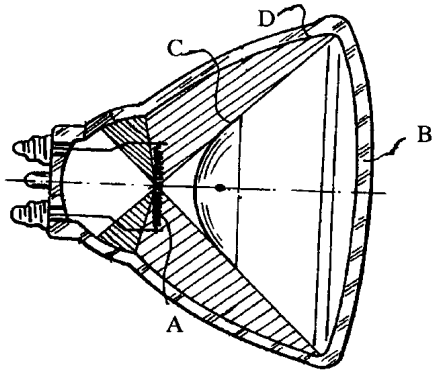

A - Light source; B - Cover plate; C - Convex mirror; D - Main reflecting surface

SEE OR SEARCH THIS CLASS, SUBCLASS:
296+, and 341+, for a reflector.
327+, for a refractor having a reflector.

SEE OR SEARCH CLASS:
313, Electric Lamp and Discharge Devices, subclasses 313+ for an electric lamp having a reflector as an integral part.
315, Electric Lamp and Discharge Devices: Systems, subclasses 82+ for a vehicle headlight system.
343, Communications: Radio Wave Antennas, subclasses 755, 761, 775, 779, 781+, 815, 817, 818+, and 834+ for a antenna with a reflector in general,

and subclasses 912+ for a radio wave reflector.

404, Road Structure, Process, or Apparatus, subclasses 6+ for a reflection material in a traffic guide or barrier, and subclasses 9+ for a reflective material in a traffic director.

428, Stock Material or Miscellaneous Articles, subclasses 426+ for a nonstructural composite product including a layer of glass, especially subclasses 433+ wherein the glass is next to a true metal or an alloy, resulting in most instances in a reflector or mirror surface.

517 Plural separate reflectors with complex surfaces:

This subclass is indented under subclass 516. Subject matter including two or more bowl-shaped devices having distinct reflecting surface.

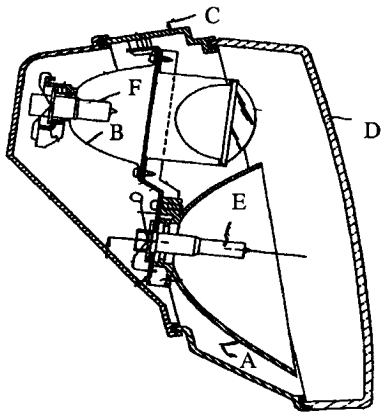

A - First reflector; B - Second reflector; C - Lamp housing; D - Lens; E - First light source; F - Second light source

SEE OR SEARCH THIS CLASS, SUBCLASS:

242+, for a diverse modifier including a reflector.

297+, for a light source and modifier having plural, distinct reflecting surfaces.

346, for plural separate reflectors or sections.

SEE OR SEARCH CLASS:

313, Electric Lamp and Discharge Devices, subclass 114 for plural reflectors.

518 Plural separate sections with complex surfaces:

This subclass is indented under subclass 516. Subject matter including two or more different reflecting portions or segments, each having two or more surfaces located in different planes.

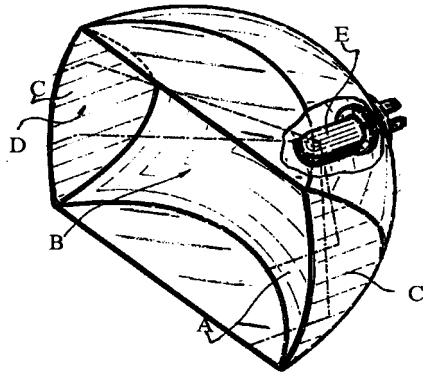

A - Rear wall; B - Rear reflecting surface; C - Lateral reflecting surface; D-Lateral reflecting surface; E-Light source

SEE OR SEARCH THIS CLASS, SUBCLASS:

297+, for one modifier with two reflecting surfaces.

333+, for plural elements on both sides of main surface.

346+, for plural separate reflectors or separate sections.

522, for plural separate refractor sections with complex surfaces.

519 With bulb mounting means:

This subclass is indented under subclass 516. Subject matter including a holder for supporting a light source in an opening of a reflector.

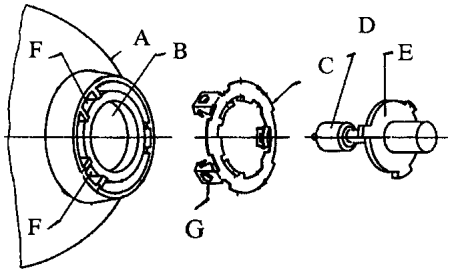

A - Reflector; B - Mounting opening; C - Retaining ring; D - Lamp or light source; E - Flange; F - Tab opening; G - Securing tab

SEE OR SEARCH THIS CLASS, SUBCLASS:

306, for a resilient means to position a light source.

353, for a translucent or opaque light modifier with socket engaging means.

396, for a clamp or hook.

457, for miscellaneous attachments and fittings.

545, for a light bulb mounting in general.

652, for a quick disconnect-type light unit.

SEE OR SEARCH CLASS:

439, Electrical Connectors, subclasses 226+ for a coupling means to receive a fluorescent or neon lamp, subclasses 284+ for a connector adapted to cooperate with a duplicate connector in general, and subclasses 375 and 605 for a lamp or electron tube socket or base.

520 Refractor structure:

This subclass is indented under subclass 509. Subject matter wherein the light modifier includes a light pervious material having a pair of opposed refracting surfaces at least one of which is, at least in part, angularly related to the other surface so that the path of a light ray incident on one opposed surface of the material and the path of the same ray after it emerges from the material through the other opposed surface are not parallel.

(1) Note. A refracting surface of this subclass type includes an interface between the material of the refractor and some other material, usually air, in which the speed of light is different.

(2) Note. A refracting surface includes a transparent focusing element consisting of a lens, usually an achromat, with crown glass and flint glass components.

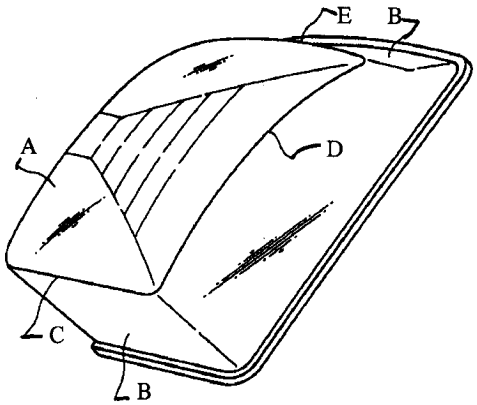

A - Front surface portion; B- Peripheral wall; C, D, E - Curved portions in up-down and; left-right direction

SEE OR SEARCH THIS CLASS, SUBCLASS:

308+, for a refractor having a complex surface.

326, for a refractor.

335+, for a curved lens-type refractor.

SEE OR SEARCH CLASS:

313, Electric Lamp and Discharge Devices, subclasses 110+ for electric lights, per se, which include a refractor as an integral part.

343, Communications: Radio Wave Antennas, subclasses 753+ for an antennae with spaced or external radio wave retractor, subclass 783 for a waveguide-type antenna with an internal refraction means, and subclasses 909+ for radio wave refracting means.

350, Optics: Systems (Including Communications) and Elements, for an optical element in general, subclasses 258+ for a means for illuminating a building interior with a outside light, and subclasses 409+ for a lens.

404, Road Structure, Process, or Apparatus, subclasses 22+ for a placement with light admitting means.

428, Stock Material or Miscellaneous Articles, subclasses 156+ for a stock material product in the form of a single or plural layer web or sheet including a component of varying thickness, and subclasses 426+ for a

nonstructural composite web or sheet embodying one or more layers of glass.

521 Plural separate refractors:
This subclass is indented under subclass 520. Subject matter including two refractor structures.

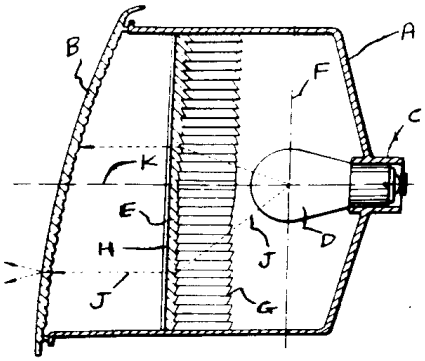

A - Housing; B - Lens with pillow optics; C - Bulb holder; D - Bulb; E - Intermediate element of transparent plastic; F - Axis of `E' passes through bulb filament; G - Elongated Fresnel prism formation perpendicular to `F'; H - Elongated Fresnel prism formations; parallel to `F'; J - Light ray

SEE OR SEARCH THIS CLASS, SUBCLASS:
268, for plural serial lens elements or components, and subclass 331 for plural serial refractors.
318, for a liquid enclosed in a refractor where the liquid/glass interface bends the light.
331, for plural refractors.

522 Plural separate sections with complex surfaces:
This subclass is indented under subclass 520. Subject matter including two different focusing portions or segments each having plural surfaces located in different planes.

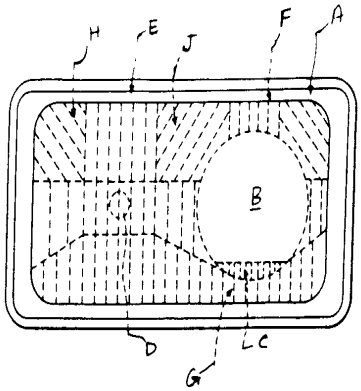

A, B, C - Plural sections; D - Lens; E - Reflector; F - Concave inner surface of reflector; G - Metal coating; H - Lead in wires; J - Light source

SEE OR SEARCH THIS CLASS, SUBCLASS:
308+, for a refractor having a complex surface.
332, for a refractor with separate sections.
335+, for a curved lens-type of refractor having diverse refracting elements on one surface.

SEE OR SEARCH CLASS:
359, Optics: Systems (Including Communication) and Elements, subclass 533 for a unitary plate or sheet including plural reflecting elements mounted on a vehicle.

523 Adjustable lamp or lamp support:
This subclass is indented under subclass 459. Subject matter including either (1) repositionable illuminating device or (2) means to hold the illuminating device.

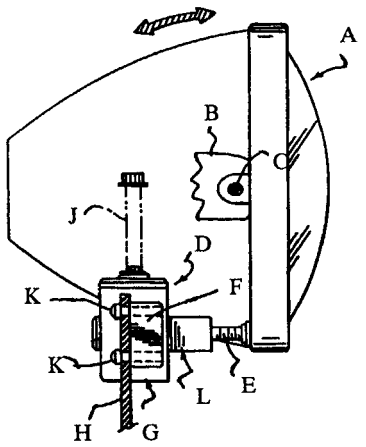

A - Lamp assembly; B - Fixed frame part; C - Pivot; D - Adjusting mechanism; E - Horizontal link; F - Wings; G - Housing ; H - Fixed frame part; J - Driving tool; K - Fasteners; L - Linearly movable cam

SEE OR SEARCH THIS CLASS, SUBCLASS:

269+, for a tiltable or rotatable light source and modifier.

277+, for an adjustable or repositionable modifier.

285+, for an adjustable or repositionable light source support.

385, for a fluid pressure controlled light support.

386, for a movable light support controlled by an electromagnetic operator.

418+, for an adjustable light support.

433+, for a modifier support.

SEE OR SEARCH CLASS:

248, Supports, subclasses 274+ for an adjustable bracket.

403, Joints and Connections, subclasses 76+ for a ball and socket articulated joint, and subclasses 122+ for a universal ball and socket joint.

524 Gear driven:

This subclass is indented under subclass 523. Subject matter wherein the adjustable lamp or lamp support is operable by mutual rotation of a pair of intermeshed toothed wheels.

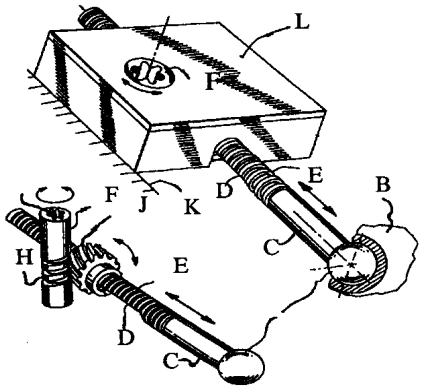

A - Spherical ball; B - Movable frame for lamp mounting; C - Output adjusting member; D - Flat surface; E - Threads of member "C"; F - Rotary input member; G - Tool slot; H - Worm threads; J - Worm gear threads; K - Vehicle-frame; L - Gear box housing

SEE OR SEARCH THIS CLASS, SUBCLASS:

273, for a screw actuated tiltable or rotatable light source and modifier.

423, for an adjustable light support with plural pairs of gears transmitting motion through internal member.

427+, for a pivoted lamp or lamp support.

SEE OR SEARCH CLASS:

74, Machine Element or Mechanism, subclasses 25+ for a rotary to reciprocating or oscillating mechanical movement, and subclass 89.13 for a mechanical movement involving bevel gears.

525 Plural headlight supports concurrently operated:

This subclass is indented under subclass 523. Subject matter wherein two or more lamp supports move simultaneously together.

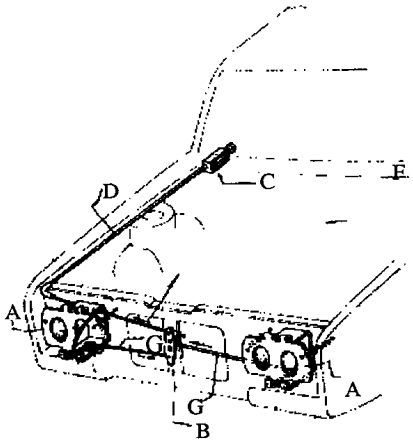

In operation, the control device `C' moves to pull the driving wire `D' in the direction of the arrow `E' and the lever `B' together with the operating wire `G' is rotated to create concurrent or simultaneous movement in both the lamp casings `A'.

SEE OR SEARCH THIS CLASS, SUBCLASS:

43+, for plural lamps concurrently moved in response to a vehicle steering mechanism or element.

526 Electromagnetic or fluid pressure actuated: This subclass is indented under subclass 523. Subject matter wherein the force required to move or reposition the lamp or lamp support is due to a magnetic force generated by the passage of electric current or is caused by the interaction of streams of fluid.

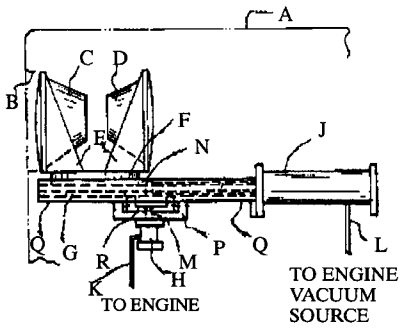

A - Automobile fender; B - Opening for headlamp; C, D - Headlamps; E - Mounting bracket; F - Rotary disc; G - Notched plate; H , J - Pneumatically operated cylinders; K, L - Fluid lines; M - Cylinder rod; N - Slide; P - Bracket; Q - Base; R - Member moves vertically

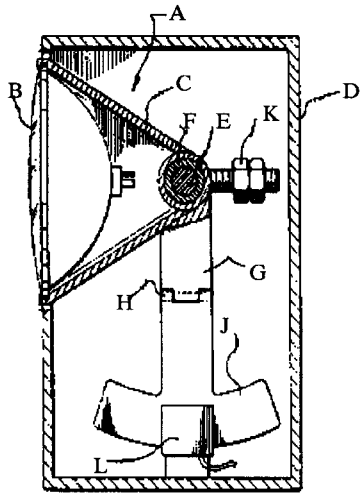

A - Headlamp system (self-adjusting); B - Headlamp; C - Lamp housing; D - Housing frame; E - Pivot (Housing `C' pivots freely about `E'; F - Bushing; G - Articulated arm; H - Hinge; J - Balancing weight; K - Counter weight; L - Electromagnet

SEE OR SEARCH THIS CLASS, SUBCLASS:

35, for a revolving lamp.

37+, for a movable pivoted lamp or lamp support controlled by the vehicle steering mechanism.

272, for an electric or pneumatic light source and a modifier activator.

285, for an adjustable or repositionable light source or light source support with electromagnetic actuator.

385, for a fluid pressure controlled movable light support.

386, for a movable light support with a electromagnetic operator.

SEE OR SEARCH CLASS:

310, Electrical Generator or Motor Structure, subclasses 12+ for a linear motor, and subclasses 40+ for a rotary motor.

318, Electricity: Motive Power Systems, subclasses 119+ for a reciprocating or oscillating motor energized system, subclass 139 for a battery operated motor system, subclasses 445+ for a automatic or time delay circuit to energize an electric motor, especially

subclasses 466+ for a movement, position, or limit of travel control circuit for an electric motor.

527 Retractable headlight:
This subclass is indented under subclass 526. Subject matter including a headlamp automatically moved outwardly through a panel opening in the vehicle to an extended position when energized and drawn back automatically to a normally concealed position within the vehicle when de-energized.

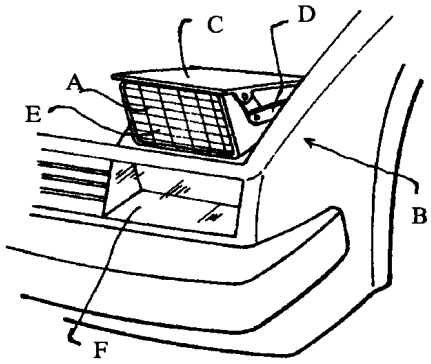

A - Headlight; B - Car body; C - Bonnet; D - Link mechanism; E - Lighting surface; F - Light passing portion

SEE OR SEARCH THIS CLASS, SUBCLASS:
472, for a retractable lamp for an aircraft.

528 Having ball and socket mechanism:
This subclass is indented under subclass 523. Subject matter wherein (1) the adjustable lamp or lamp support includes (A) a spherical bearing surface, and (B) a holder or outer member conforming to the bearing surface and enclosing the bearing surface and (2) the bearing surface and either the holder or outer member have a relative movement with respect to each other.

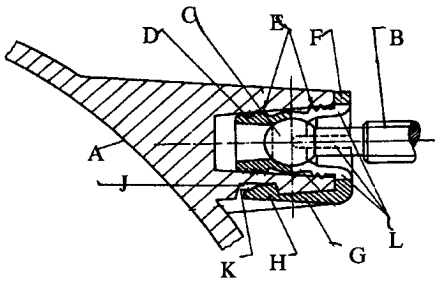

A - Deflector; B - Securing set screws; C - Spherical head; D - Spherical bushing (holder outer member); E - Continuous rings shaped around outer surface of `D'; F - Outer flange; G - Resilient arm; H - Snap-in nose with slip-on bevel `K' ; engages depression `J'; J - Depression; K - Slip-on-bevel; L - Slots in the bushing

SEE OR SEARCH THIS CLASS, SUBCLASS:
114+, for ball and socket-type articulated members with restricted movement about one axis.
122+, for universal ball and socket-type articulated members.
141, for a divided socket-type coupling.
273, for a tiltable or rotatable light source and modifier with screw actuator.
324, for an adjustable or positionable light modifier with actuator.
515, for a ball and socket reflector mechanism.

SEE OR SEARCH CLASS:
248, Supports, subclass 288.3 for a ball and socket-type adjustable bracket.
403, Joints and Connections, subclass 56 for plural ball and socket type articulated members.

529 Manually operable (e.g., remote manual actuation):
This subclass is indented under subclass 523. Subject matter wherein the lamp or lamp support adjustment mechanism includes an operating member (e.g., foot or hand lever assembly) actuated by a living being.

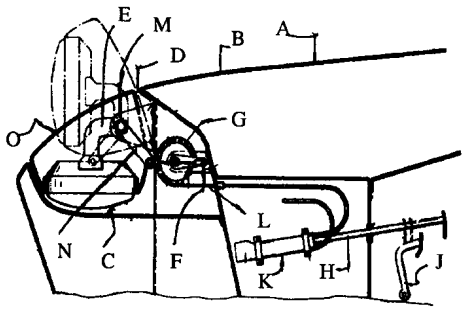

A - Vehicle; B - Vehicle wall; C - Headlight; D - Headlight opening; E - Headlight bracket; F - Headlight operating gear; G - Cable or rope disc; H - Operating arm; J - Pedal mechanism; K - Operating device; L - Rope or cable; M - Bearing shaft; N - Cooperating lever

SEE OR SEARCH THIS CLASS, SUBCLASS:

40, for manual or steering control of a pivoted lamp.

530 Plural or diverse motion:

This subclass is indented under subclass 529. Subject matter including means (e.g., a handle, lever, cable, or link mechanism) providing a directive control in two or more angular positions, or to move on at least two different paths and thereby swing the light to project its rays in horizontal directions and also to project its rays at different altitudes in several horizontal directions.

(1) Note. Lamps may be elevated, lowered, or swung in a horizontal plane by means of simple movement of the lever.

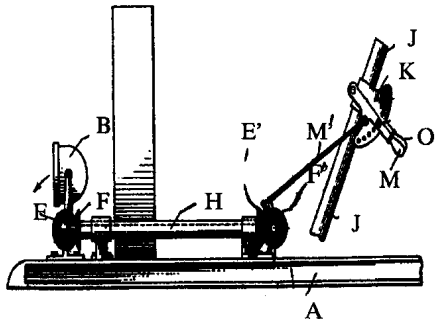

A - Support beam; B - Lamp; E, F - Beveled gears; H - Hollow shaft; E', F' - Beveled gears; M' - Pivoted rod; J - Steering shaft; K - Segment plates; O , M - Operating levers. NOTE: MOVEMENT OF BEVEL GEARS THROUGH LEVERS AND PIVOTED ROD CAUSES PLURAL OR DIVERSE MOTIONS OF THE LAMP 'B`.

SEE OR SEARCH THIS CLASS, SUBCLASS:

39, for pivoted lamps having plural unlike motions controlled additionally by a manual movement.

419, for an adjustable light support having plural diverse motions.

422+, for plural diverse motions with coaxial motion transmission members.

SEE OR SEARCH CLASS:

74, Machine Element or Mechanism, subclasses 89.2+ for reciprocating or oscillating motions with flexible drive connector, subclass 108 for a reciprocating to oscillating motion with lever and slide mechanism, subclass 471 for multiple controlled elements wherein the control moves in two planes, subclasses 484+ for steering and control assemblies, and subclass 502.1 for a mirror moved by the flexible transmitter (e.g., borden cable) with hand operator.

531 Horizontal motion:

This subclass is indented under subclass 529. Subject matter including means (e.g., a cable, lever, or handle) for moving the lamp or lamp support about a vertical axis or to effect the rotation of the lamp or lamp support in a substantially horizontal plane.

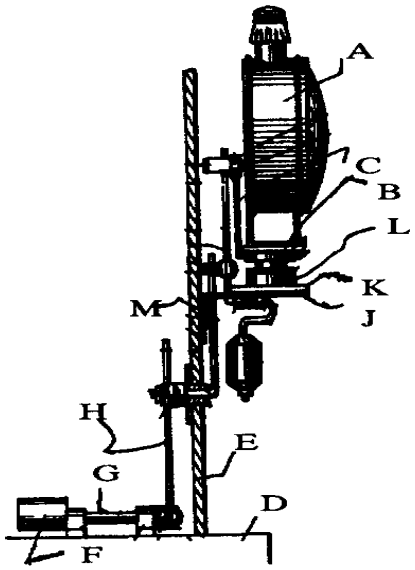

A - Lamp;B - Lamp base; C - Upright; D - Car platform; E - Dash board; F - Foot operated lever; G - Rock shaft; H - Connecting bar; J - Brackets; K - Platform; L - Base; M - Bracker support. Note: Foot pressure on "F" moves the lamp "A" from left right or vise versa.

SEE OR SEARCH THIS CLASS, SUBCLASS:

40, for manual or steering control of a pivoted lamp.

427+, for a pivoted lamp or lamp support.

SEE OR SEARCH CLASS:

74, Machine Element or Mechanism, subclasses 504+ for a hand operated rotatable rod, shaft, or post, subclass 514 for a foot operated signal, and subclass 562.5 for offset paddle elements.

116, Signals and Indicators, subclasses 46+ for a rotatable vehicle motion and direction signal.

403, Joints and Connections, subclass 166 for articulated spring-biased coaxial members.

532 Vertical motion:

This subclass is indented under subclass 529. Subject matter including (1) a horizontal pivot axis to provide for vertical swinging of the lamp or lamp support or (2) wherein the lamp or lamp support is pivotally mounted to tilt in a vertical plane.

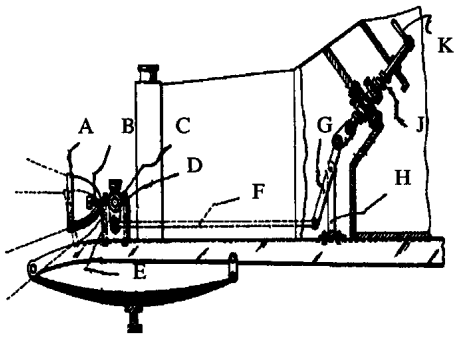

A - Lamp; B - Lamp supporting yoke; C - Lamp bracket; D - Rock shaft; E - Crank shaft; F - Movable rod; G - Pivoted arm; H - Rod support; J - Rotatable screw; K - Operating handle

SEE OR SEARCH THIS CLASS, SUBCLASS:

40, for manual control of a pivoted lamp.

287, for an angularly adjustable or repositionable light source or light source support.

425, for an adjustable light support wherein the single reciprocating and turning member transmits plural different motions to the adjustable support.

427+, for a pivoted lamp or lamp support.

SEE OR SEARCH CLASS:

74, Machine Element or Mechanism, subclasses 491+ for a hand-operated control lever and linkage system, and subclass 485 for steering and control assemblies with a rotary control shaft.

534 Railway truck actuated:

This subclass is indented under subclass 523. Subject matter including a swiveling frame of wheels, (i.e., a truck), under each end of a railroad car, trolley car, or locomotive for turning the adjustable illuminating means.

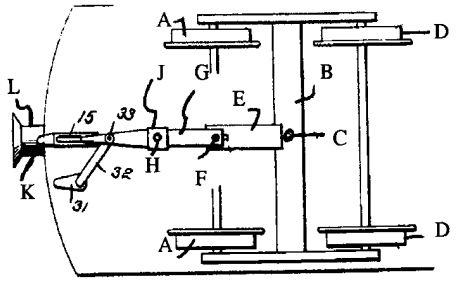

A - Front wheels; B - Bolster (movement of which actuates headlight); C - Pivot point; D - Rear wheels; E - Connecting bar; F - Pin; G - Pivoted lever; H - Pivot point; J - Stop nut; K - Angular support (freely rotates); L - Headlight

SEE OR SEARCH THIS CLASS, SUBCLASS:

384, for a support wherein a moving mass controls movable light support.

535 Cable, chain, or spring actuated:

This subclass is indented under subclass 534. Subject matter including (1) a wire rope, (2) a series of usually metal links or rings connected to or fitted into one another so as to move freely forming a flexible ligament, or (3) an elastic device (e.g., coil or wire) between the truck and the headlight for turning the headlight.

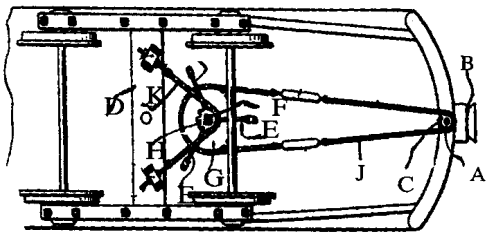

A - Vertical shaft (connected to lamp and sprocket wheel); B - Headlamp; C - Sprocket wheel; D - Truck; E - Bracket; F - Vertical shaft; G , H - Sprocket wheels; J, K - Chains

SEE OR SEARCH THIS CLASS, SUBCLASS:

49+, for a lamp wherein link lever transmission means is controlled by means of steering post arm rod motion.

536 Gear actuated:

This subclass is indented under subclass 534. Subject matter including at least a pair of intermeshed toothed wheels between the truck and the headlight to turn the headlight.

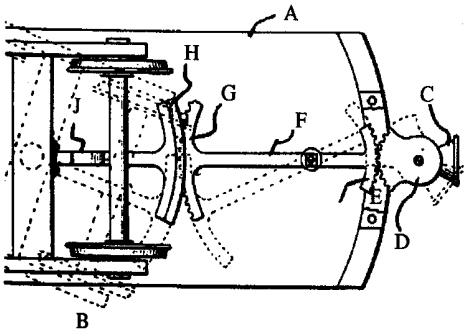

A - Rail car body; B - Truck; C - Headlight; D - Gear element to headlight; E - Meshing gear; F - Pivoted lever; G - Toothed gear; H - Meshing gear to truck; J - Arm connected to truck

SEE OR SEARCH THIS CLASS, SUBCLASS:

273, for a screw-actuated tiltable or rotatable light source modifier.

284, for a screw-actuated angularly adjustable modifier.

289, for a screw-actuated adjustable light source or light source support.

537 Lever or link actuated:

This subclass is indented under subclass 534. Subject matter including a projecting rod or piece, usually metal, and an intermediate rod or piece between the truck and the headlight for turning the headlight.

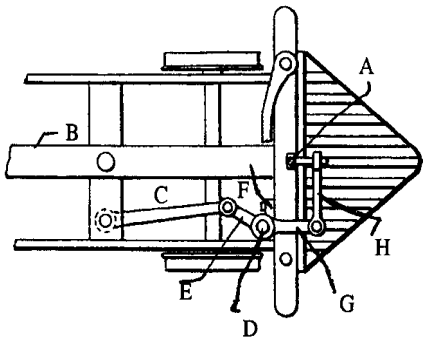

A - Vertical shaft connected to lamp; B - Draw bar; C - Fixed bearing; D - Vertical rock shaft; E, F, G, H - Lever and link mechanism

538 Projection-type headlamp:
This subclass is indented under subclass 459. Subject matter wherein the illuminating means includes a light source and an output light beam of the light source is converted into a focused light beam by means of an elliptical mirror and a convex or condensing lens so as to illuminate a relatively small area in front of the vehicle.

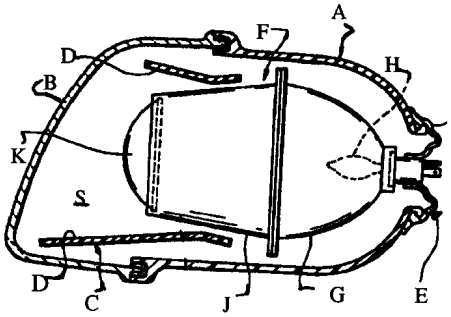

A - Lamp body; B - Lens; C - Projection lamp cover; D - Light reflecting surface; E - Lamp cover; F - Projection lamp unit; G - Reflector; H - Bulb-Lens holder; K - Projection lens

SEE OR SEARCH THIS CLASS, SUBCLASS:
242, for a diverse modifier.
293, for a light source and a modifier including selected wavelength modifier.
310, for an enclosed light source, curved lens-type refractor.

539 Including mask or screen:
This subclass is indented under subclass 538. Subject matter comprising a diaphragm or shade plate arranged in the reflector to create a dark-light limit line in the transmitted light beam or for partially shading and thus contouring the reflected light.

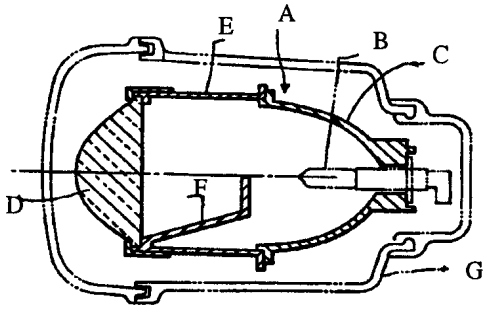

A - Projection unit; B - Light bulb; C - Reflector; D - Projection lens; E - Lens holder; F - Mask or screen; G - Lamp body

SEE OR SEARCH THIS CLASS, SUBCLASS:
303, for plural distinct reflecting surfaces including means for blocking axial rays.
305, for coaxial plural reflecting surfaces including means for modifying axial rays.

SEE OR SEARCH CLASS:
313, Electric Lamp and Discharge Devices, subclass 117 for an optical device or special ray transmitting envelope including light valve or obscuring means.

540 Visual identification light:
This subclass is indented under subclass 459. Subject matter wherein the illuminating means indicates intended movement of the vehicle.

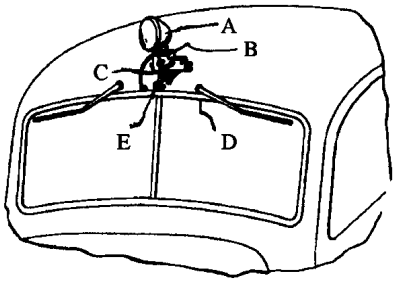

A - Visual identification lamp; B - Lamp support shaft motor; C - Lamp support shaft; D - Windshield; E - Lamp bracket

SEE OR SEARCH THIS CLASS, SUBCLASS:

498+, for a license plate having turn signal or brake or emergency signal.

800, for a light emitting diode.

812, for signs in general.

SEE OR SEARCH CLASS:

40, Card, Picture, or Sign Exhibiting, subclasses 541+ for a illuminating sign, and subclasses 591+ for an automatic vehicle carried sign.

116, Signals and Indicators, subclasses 28+ for a vehicle-related signal or indicator in general, especially subclasses 35+ for a signal or indicator related to motion or direction.

248, Supports, subclass 904 for an indicator mount.

307, Electrical Transmission or Interconnection Systems, subclass 108 for an automobile lighting circuit.

315, Electrical Lamp and Discharge Devices: Systems, applicable to vehicles in general.

340, Communications: Electrical, subclasses 425.5+ for a land vehicle alarm or indicator, subclasses 468+ for a external signal light system, subclasses 475+ for a turn signal system, and subclasses 815.01+ for a visual indicator.

359, Optics: Systems (Including Communication) and Elements, subclasses 515+ for a signal reflector.

541 Brake:

This subclass is indented under subclass 540. Subject matter wherein the illuminating means indicates the deceleration of the vehicle (e.g., stopping).

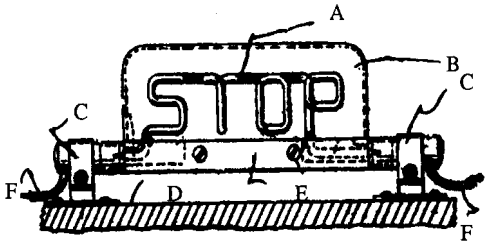

A - Visual lamp (brake); B - Lamp housing; C - Lamp brackets; D - Window sill; E - Lamp support block; F - Lamp lead wires

SEE OR SEARCH CLASS:

40, Card, Picture, or Sign Exhibiting, subclasses 591+ for an automotive vehicle-carried sign, and subclass 911 for an automobile body identification sign.

200, Electricity: Circuit Makers and Breakers, subclass 61.89 for a vehicle pedal- operated circuit maker and breaker in general.

340, Communications: Electrical, subclasses 471+ for a land vehicle hazard warning and distress signaling alarm or indicator, and subclass 815.37 for a signal lease.

542 Emergency:

This subclass is indented under subclass 540. Subject matter wherein the illuminating device indicates a distress or hazard condition of the vehicle (e.g., police, fire, ambulance).

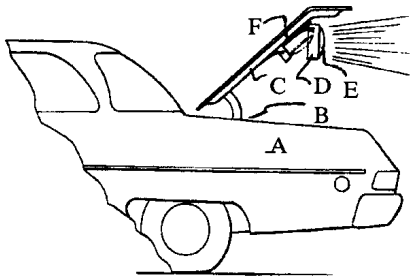

A - Vehicle; B - Trunk; C - Trunk cover; D - Lamp housing; E - Emergency lamp; F - Lamp bracket

SEE OR SEARCH CLASS:

40, Card, Picture, or Sign Exhibiting, subclass 592 for a roof-mounted automotive vehicle-carried illuminated sign.

116, Signals and Indicators, subclass 30 for a can or train marker, and subclass 147 for sirens.

315, Electric Lamp and Discharge Devices: Systems, applicable to vehicles in general.

340, Communications: Electrical, subclasses 471+ for a land vehicle alarm or indicator including hazard warning or distress signaling.

543 Plural light sources:
This subclass is indented under subclass 459. Subject matter including two spatially separate illuminating means.

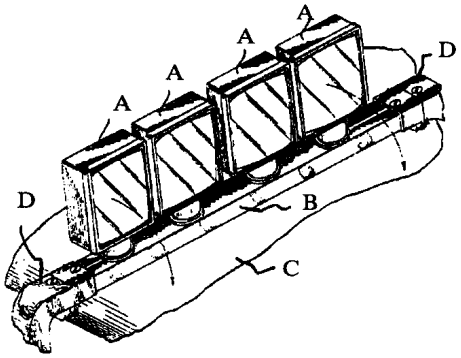

A - Plural light sources or lamps; B - Support bar; C - Vehicle body; D - Support brackets

SEE OR SEARCH THIS CLASS, SUBCLASS:
33, for plural light sources arranged to provide a condensed and shadowless illumination for a work area.
209, for plural nonelectric light sources.
210, for plural carbon-arc-type light sources.
211+, for a multiple filament light unit.
217, for plural elongated light sources in a light unit.
227+, for plural light sources in general.

544 With common housing:
This subclass is indented under subclass 543. Subject matter including a single case, enclosure, or compartment and wherein the illuminating devices are positioned within the single case, enclosure, or compartment.

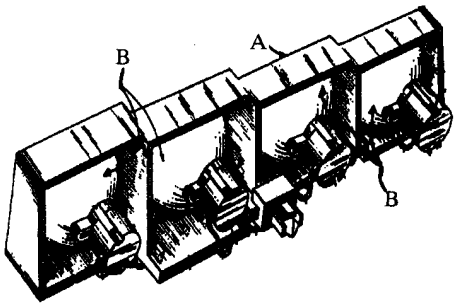

A - Common housing; B - Plural light sources or lamps

SEE OR SEARCH THIS CLASS, SUBCLASS:
211+, for a multiple filament light unit.
240, for plural light sources having common housing.
546, for a housing in general.

545 Including light emitting diode:
This subclass is indented under subclass 544. Subject matter wherein the light sources consist of an electrical rectifier including a semiconductor crystal capable of producing illumination.

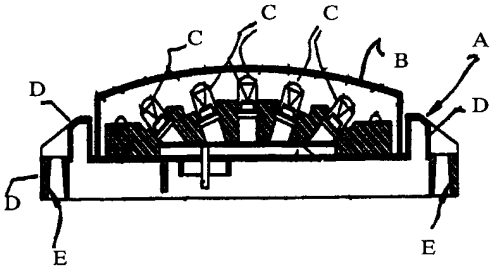

A - Common housing; B - Outer lens; C - Light emitting diodes; D - Mounting base; E - Mounting holes

SEE OR SEARCH THIS CLASS, SUBCLASS:
800, for a light emitting diode

SEE OR SEARCH CLASS:
313, Electric Lamp and Discharge Devices, subclasses 498+ for a solid-state-type lamp or discharge device.

546 Housing

This subclass is indented under subclass 459. Subject matter comprising means for surrounding and supporting the illuminating means.

(1) Note. This subclass includes the housing structure having an opening for the egress of light and for which no light modifying function is claimed.

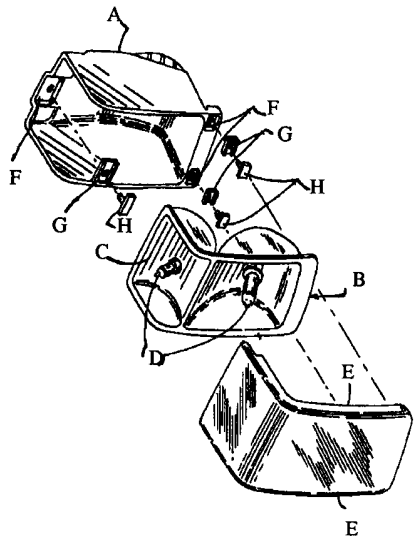

A - Lamp housing; B - Lamp assembly; C - Reflector portion; D - Bulbs; E - Outer cover; F - Mounting recesses; G, H - Mounting hardwares

SEE OR SEARCH THIS CLASS, SUBCLASS:

362, for a lamp housing in general.
365+, for a recessed housing with mounting means.
375, for a housing with closure.
396, for a lamp or hook.
544, for plural light sources with common housing.

SEE OR SEARCH CLASS:

220, Receptacles, subclasses 200+ for a closure in general, and subclasses 315+ for means to secure or retain closure in its closed position.
292, Closure Fasteners, digest 1 for a automobile fender shield fastener.

547 With cooling or ventilating feature:

This subclass is indented under subclass 546. Subject matter including means for transferring heat from the interior of the housing to the exterior of the housing (e.g., a plurality of heat dissipating plates, an air supply passage, or a pipe-like escape hole).

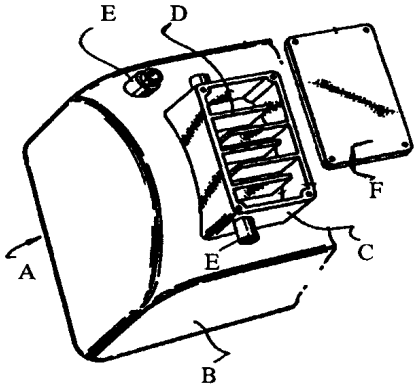

A - Headlamp assembly; B - Lamp housing; C - Dust resistant box; D - Heat dissipating plates or ribs; E - Air circulation hoses; F - Box cover

SEE OR SEARCH THIS CLASS, SUBCLASS:

96, for a fluid distributor.
217+, for an elongated source light unit or support with ventilating or cooling means.
294, for a light source and a modifier with ventilating, cooling, or heat insulating means.
345, for a reflector with ventilating or cooling means.
373, for a housing with cooling means.

SEE OR SEARCH CLASS:

359, Optics: Systems (Including Communications) and Elements, subclass 512 for protection from moisture and foreign particles including humidity and temperature control.
361, Electricity: Electrical Systems and Devices, subclasses 688+ for a housing or mounting assembly with diverse electrical components including cooling means in general.

548 Including specific light bulb mounting:
This subclass is indented under subclass 546. Subject matter wherein the illuminating means includes a light source (e.g., light bulb) and the significance is attributed to a supporting structure or an attachment means for the light source in the housing.

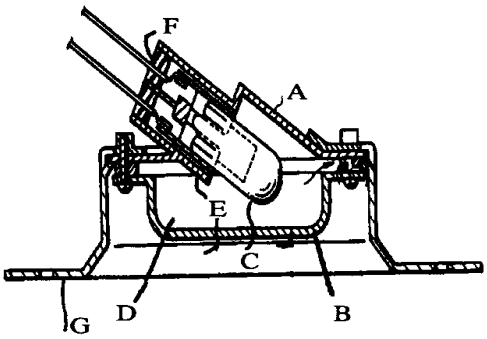

A - Lamp housing; B - Outer lens; C - Bulb; D - Bulb chamber; E - Bulb socket; F - Bushing; G - Lamp bracket connected to vehicle frame

SEE OR SEARCH THIS CLASS, SUBCLASS:
364+, for a recessed housing with mounting means.
368, for a housing including mounting means.
429, for an adjustable socket holder.
457, for a miscellaneous attachment or fitting.
519, for a reflector structure with bulb mounting means.
546, for a housing in general.
549, for a specific lamp mounting or retaining.
652, for a quick-disconnect type light unit.

SEE OR SEARCH CLASS:
439, Electrical Connectors, subclasses 345+ for retaining means in general, and subclasses 527+ for supporting means for a coupling part in general, and subclass 753 for a cylindrical metallic cap and a shell-type lamp receptacle casing.

549 Specific lamp mounting or retaining:
This subclass is indented under subclass 459. Subject matter wherein the illuminating means includes a lamp and the significance is attributed to the means for supporting the lamp or attaching the lamp to the vehicle (e.g., a coupling assembly consisting of a hinge-like member with a pin together with a yoke-like member).

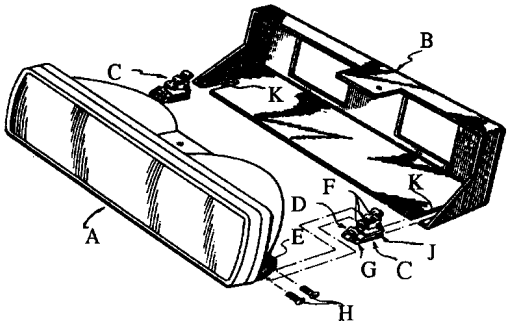

A - Optical unit; B - Vehicle frame member; C - Mounting or retaining assembly; D - Engagement member; E - Mounting portion (optical unit); F - Mounting holes; G - Coupling means; H - Mounting fasteners; J - Slot engaging means; K - Mounting slot (frame unit)

SEE OR SEARCH THIS CLASS, SUBCLASS:
364+, for a recessed housing with mounting means.
368+, for mounting means.
374, for a closure fastener.
455, for a lens holder or support.
457, for a miscellaneous attachment or fitting.
548, for a specific light bulb mounting.

SEE OR SEARCH CLASS:
16, Miscellaneous Hardware, digest 26 for a headlight hinge.
248, Supports, subclass 27.3 for an instrument in a panel having biased clip holding means, subclass 289.1 for a adjustable bracket with vertical pivot, subclass 291 for an adjustable bracket with horizontal pivot, and subclass 310 for a base-engaging article holding means.

551 LIGHT FIBER, ROD, OR PIPE:
This subclass is indented under the class definition. Subject matter including a long, thin, flexible wire or tube of ultra-pure glass, plastic, or other transparent material, having a central core of higher refractive-index than the outer cladding, capable of conducting modulated

light signals by total internal reflection, transmitting light or sharp images along any desired path.

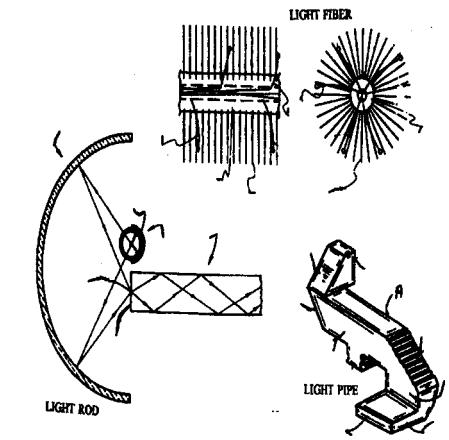

Figure 1: A typical example of the subject matter. LIGHT FIBER: A - fiber-optic strand; B - Needle; C - Branch trunk; LIGHT ROD: A - Light source; B - Light rod (guide); C - Input end; D - Integral reflector; E - Reflector receives light from `A'; F - Focus; LIGHT PIPE: A - Light pipe ; B - Light inlet; C - First reflecting surface; D - Second reflecting surface; E - Second; section; F - Third reflecting surface; G - Third section; H - Fourth section; J - Outlet surface

SEE OR SEARCH CLASS:

40, Card, Picture, or Sign Exhibiting, for light piping material used for a card, picture, and sign exhibiting in general.

65, Glass Manufacturing, subclasses 376+ for the manufacture of light piping fibers or filaments.

116, Signals and Indicators, subclasses 200 , 244 and 286+ for indicators using light guides.

128, Surgery, for light piping material used for inspecting the human anatomy in general.

250, Radiant Energy, for light piping material used to pipe light to a photocell.

352, Optics: Motion Pictures, subclass 134 for plural projectors with a single light source.

355, Photocopying, subclass 1 for fiber optics.

372, Coherent Light Generators, subclass 6 for an optical fiber laser.

385, Optical Waveguides, subclasses 115+ for an optical fiber bundle.

552 With intensity control:

This subclass is indented under 551. Subject matter comprising a diaphragm disc, a vane, or a light deflector placed in the optical path of a focused light beam from a constant-intensity light source to regulate the luminous density or luminous flux of the focused light beam, or to provide regulated transient illumination.

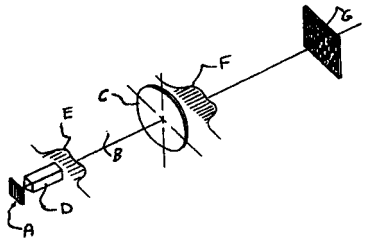

Figure 1: A typical example of the subject matter. A - Multi-element light source; B - Optical axis; C - Lens; D - Integrator rod; E, F - Energy profile curves; G - Target with intensity distribution

SEE OR SEARCH CLASS:

345, Computer Graphics Processing and Selective Visual Display Systems, subclass 63 for display elements arranged in a matrix having fluid light emitter including intensity control.

359, Optics: Systems (Including Communication) and Elements, subclasses 823+ for a lens with an adjustable focus including electromagnetic or piezoelectric drive or focusing ring or sliding barrel.

385, Optical Waveguides, subclass 25 for a movable optical coupler, and subclasses 123+ for an optical fiber waveguide with cladding.

553 Laser:

This subclass is indented under 551. Subject matter comprising a device for producing a high intensity, coherent, monochromatic beam of light.

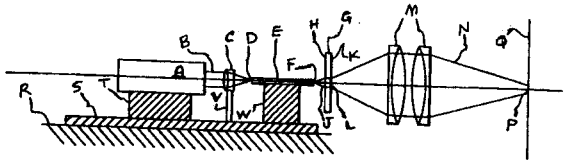

Figure 1: A typical example of the subject matter. A - Laser (source or light); B - A beam of collimated light ; C - Focusing lens; D - Entrance end; E - Single optical fiber; F - Exit end; G - Fiber-optic image transmitting element; H - Entrance face of `G'; J - Illuminated spot; K - Exit face of `G'; L - Light-emitting spot; M - Objective lens; N - Cone of light leaving `M'; P - Image of spot `J'; Q - Image plane; R - Supporting surface of base `S'; S - Base; T, V, W - Mounting means for laser `A'

(1) Note. It is a device for generating a very narrow, intense beam of coherent light. The name is derived from the initial letters of "Light Amplification by Stimulated Emission of Radiation." In the emission of ordinary light, the molecules or atoms of the source emit their radiation independently of each other, and consequently there is no definite phase relationship among the vibrations in the resultant beam. The light is incoherent. The laser, by means of an optical resonator, focuses the atoms of the material within the resonator, to radiate in phase. The emitted radiation is stimulated by the excitation of atoms to a higher energy level by means of energy supplied to the device.

SEE OR SEARCH CLASS:

372, Coherent Light Generators, subclass 6 for an optical fiber laser, subclass 7 for a thin film laser, and subclass 8 for a laser logic system.

385, Optical Waveguides, subclass 35 for an input/output coupler with a spherical lens.

434, Education and Demonstration, subclass 4 for the detection or range determination of a distant object by optical means.

554 With optical fiber bundle:

This subclass is indented under 551. Subject matter comprising a band or group of mostly parallel, small-diameter flexible wires made of glass, plastic, or other similar transparent material.

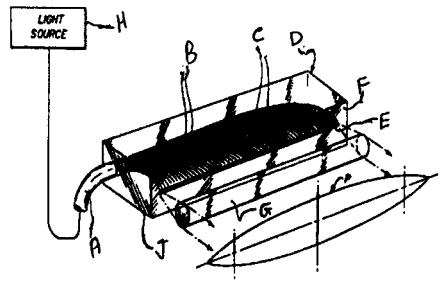

Figure 1: A typical example of the subject matter. A - Fiber-optic bundle; B, C - Individual optical fiber filaments for conducting and emitting and output light; D - Housing body has a thin elongated line `E' of splayed output ends of B on a face of a block `J'; F - Polishing face of block `J'; G - Single lens; H - Light source ; J - Block; P - Desired light pattern

SEE OR SEARCH CLASS:

385, Optical Waveguides, subclasses 115+ for an optical fiber bundle.

555 Light Emitting Diode (LED):

This subclass is indented under 551. Subject matter comprising a two-electrode semiconductor device emitting incoherent optical radiation when biased by a voltage in a forward direction.

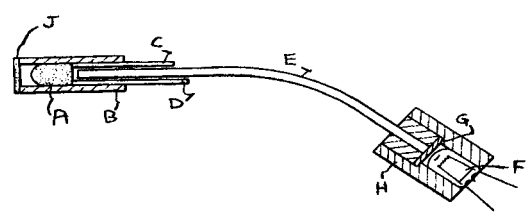

Figure 1: A typical example of the subject matter. A - Light emitting panel; B - Sleeve; C, D - Terminals serve to supply current to `A'; E - Light guide or rod of optical fiber; F - Incandescent lamp; G - Color filter; H - Lamp socket; J - Diffusion disc

SEE OR SEARCH THIS CLASS, SUBCLASS:

800, for a light emitting diode.

SEE OR SEARCH CLASS:

257, Active Solid-State Devices, (e.g., Transistors, Solid-State Diodes), subclass 98 for an incoherent light emitter structure with a reflector, opaque mask, or optical element.

607, Surgery: Light, Thermal, and Electrical Application, subclass 89 for a laser application.

556 Including specific fiber structure:

This subclass is indented under 554. Subject matter wherein the significance is attributed to the makeup of the optical fiber itself.

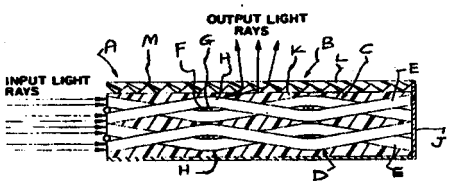

A- Light emitting panel; B - Emitter surface made of layers `C' & `D' woven into sheet of fiber-optic material `E'; C, D, E - Layers made of woven sheet of fiber-optic material ; F, G - Fill threads of cotton fiber; H - Plurality of bends of optical fiber acting as diffuser ; J - Reflector ; K - Coating with different refractive index; L - Lenticular film for shifting the light rays; M - Flat front of emitting surface

SEE OR SEARCH THIS CLASS, SUBCLASS:

615, for an edge-lighted panel.

SEE OR SEARCH CLASS:

40, Card, Picture, or Sign Exhibiting, subclasses 546+ for an edge-illuminated fiber optic or light pipe.

139, Textiles: Weaving, subclasses 420+ for a specific woven fabric material.

385, Optical Waveguides, subclasses 31+ for an input/output coupler, 39+ for a particular coupling structure, and subclasses 100+ for an optical transmission cable.

557 Nonelectric power source:

This subclass is indented under 551. Subject matter comprising a circuit or device wherein the capability of producing an effect in the circuit is derived from a generative force or stimulus other than electricity.

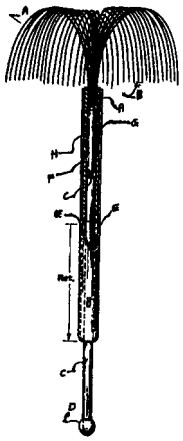

Figure 1: A typical example of the subject matter. A - Fiber optic strands; B - Handle; C - Strand out-tip; D - Handle ball-tip; E - Light body or light-permeable material; F - Light body outer surface; G - Light cartridge unit; H - Built-in sliding sheath fully retracted (Ret.)

SEE OR SEARCH CLASS:

47, Plant Husbandry, Digest 6 for plant growth regulation by control of light thereon (e.g., light due to solar energy).

52, Static Structures (e.g., Buildings), subclass 28 for an artificial illumination means.

359, Optics: Systems (Including Communication) and Elements, subclasses 591+ for a building interior illumination with a reflected, refracted, or predetermined angle of entrance of outside light.

385, Optical Waveguides, subclass 900 for a solar collector or transmitter.

558 Diffuser or diffusing of incident light (e.g., optical coupler):

This subclass is indented under 551. Subject matter comprising a solid, internally microfissured transparent resin or similar material molded into optical emission shape for deflecting heat but transmitting the concentrated light rays for shadowless, uniform illumination of the object.

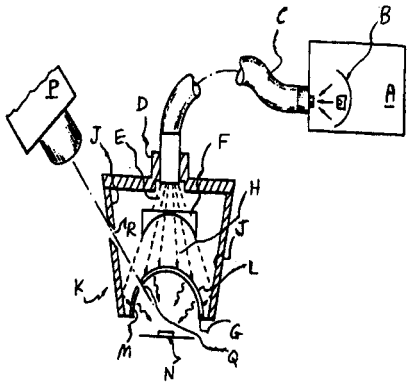

Figure 1: A typical example of the subject matter. A - Lamp house; B - Reflector-type projection lamp; C - Fiber-optic cable; D - Removable housing top; E - Light rays from `C'; F - Negative beam diverging lens to shape and direct `E'; G - Hemispherical diffuser; H - Exit light rays; J - Interior walls of `K'; K - Conical reflector; L - Convex surface of `G'; M - Concave surface of `G'; P - Video camera for viewing `N'; Q - Off-axis viewing port in `G'; R - Off-axis viewing port in `K'

SEE OR SEARCH THIS CLASS, SUBCLASS:

1+, for a daylight lighting including selected wave length modifier, and subclasses 355+ for a diffusing-type translucent or an opaque light modifier.

SEE OR SEARCH CLASS:

313, Electric Lamp and Discharge Devices, subclass 116 for a light diffusing optical device or a special ray transmissive envelope.

359, Optics: Systems (Including Communication) and Elements, subclass 599 for diffusing of incident light.

385, Optical Waveguides, subclasses 39+ for a particular optical coupling structure.

559 Illuminating or display apparatus (e.g., sign, runway light, channel marker):

This subclass is indented under 551. Subject matter comprising an optical system designed to distribute light for visible representation of characters of information such as a manufacturer's advertising information or a marker on a runaway.

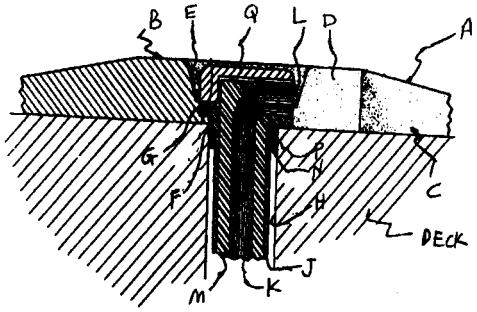

Figure 1: A typical example of the subject matter. A - Light fixture housing; B - Rectangular plateau; C - Slot provides clearance channel for light rays from `B'; D - Wedge slot; E - Recessed area in `B'; F - Central main bore; G - Counter bore; H - Bore in the deck; J - Metal tubing; K - fiber-optic rod; L - Exit window; M - Potting material made of rubber ; N, P - Circular groove with gasket ring; Q - Metal cover plate

SEE OR SEARCH CLASS:

40, Card, Picture, or Sign Exhibiting, subclasses 546+ for an edge-illuminated sign including fiber optics light pipe.

340, Communications: Electrical, subclasses 981+ for aircraft beacons.

385, Optical Waveguides, subclass 901 for illuminating or display apparatus.

560 With reflective surface (e.g., mirror):

This subclass is indented under 559. Subject matter wherein the visual display, usually having a filament lamp, a mercury-vapor lamp, or similar light source, is associated with a metal sheet or screen used as a mirror for intercepting light rays from the light source.

SEE OR SEARCH THIS CLASS, SUBCLASS:

26, for an edge-illuminated modifier or light rod or pipe, subclass 30 for an internal light source with a indirect illumination, and subclass 615 for an edge-lighted panel.

SEE OR SEARCH CLASS:

40, Card, Picture, or Sign Exhibiting, subclass 431 for an illuminated display with special effects.

116, Signals and Indicators, subclass 286 for a rotary indicator with illumination means.

359, Optics: Systems (Including Communication) and Elements, subclass 599 for diffusing of incident light, and subclass 889 for an absorption filter movable in or out of the optical path.

385, Optical Waveguides, subclass 901 for illuminating or display apparatus.

561 Including liquid crystal display (i.e., LCD): This subclass is indented under 559. Subject matter comprising (a digital or alphanumeric) exhibit made of material whose reflectance or transmittance changes in response to an electric field.

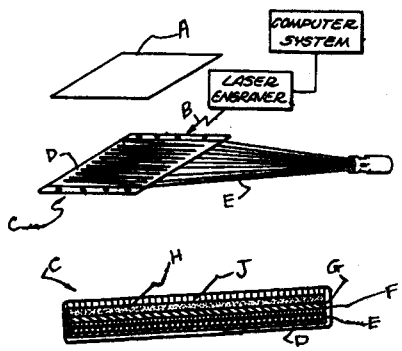

Figure 1: A typical example of the subject matter. A - Display panel ; B - Laser beam; C - Fiber-optic backlighting in `A'; D - Reflective backing; E - Layer of optical fibers; F - Clear plastic; G - Layer of adhesive; H- Diffuser foam; J - Sheet of plastic wrapped around all layers

SEE OR SEARCH CLASS:

359, Optics: Systems (Including Communication) and Elements, subclasses 48+ for utilizing liquid crystal material with particular illumination.

562 With gas or liquid container: This subclass is indented under 551. Subject matter comprising a light source supplying illumination to a vessel (e.g., a swimming pool spa) containing gas or liquid.

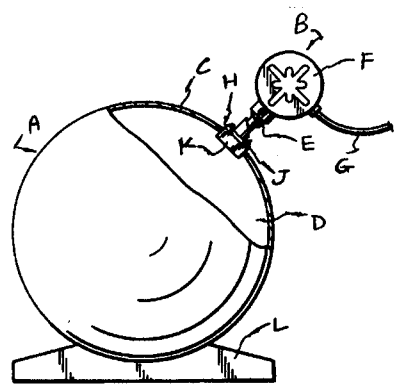

Figure 1: A typical example of the subject matter. A - Pressure vessel ; B - Lighting unit; C - Pressure vessel wall; D - Vessel interior; E - Light rod or pipe; F - Light source; G - Power supply cable ; H - Fixture or flange retainer; J, K - Mounting bracket; L - Vessel support

SEE OR SEARCH THIS CLASS, SUBCLASS:

96, for a fluid distributor, subclass 101 for illuminating means for a liquid container, and subclasses 154+ for a general container with illuminating means.

SEE OR SEARCH CLASS:

40, Card, Picture, or Sign Exhibiting, subclasses 406+ for display devices with gas or liquid movements.

99, Foods and Beverages: Apparatus, subclass 341 for a cooking apparatus with illuminating means.

119, Animal Husbandry, subclasses 253+ for ornamental liquid display and submerged display, and subclass 267 for an aquarium illumination.

134, Cleaning and Liquid Contact with Solids, subclass 113 for the apparatus of the class combined with illuminating means.

220, Receptacles, subclass 581 for a high pressure gas tank with illuminating means.

976, Nuclear Technology, Digest 235 for a structural combination of a reactor core or a moderator structure with illuminating means for viewing the internal structure.

563 Horticultural:

This subclass is indented under 551. Subject matter wherein the light energy emitted from the fiber, rod, or pipe is effectively dispersed as a photosynthesizing light source in order to nurture a plant or to illuminate a plant with indirect, substantially glare-free, directional lighting.

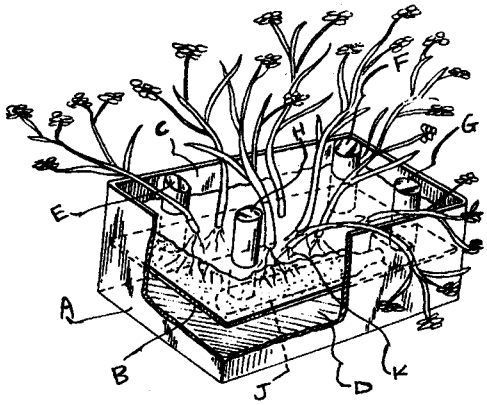

Figure 1: A typical example of the subject matter. A - Plant box; B - Box partition or false bottom to support plant; C - Upper box cavity or planter; D - Lower box cavity or light chamber; E, F, G, H, - Light conductive pipes or rods each having lower light receiving edge and upper light emitting edge; J - Light source; K - Soil level; Note: The upper light emitting edges protrude above the level `K' of the top soil and face the plant to be illuminated.

SEE OR SEARCH THIS CLASS, SUBCLASS:

805, for a light source used for horticulture in general.

SEE OR SEARCH CLASS:

359, Optics: Systems (Including Communication) and Elements, subclasses 597+ for building interior illumination with reflec tion including internal reflection in a single optical element.

564 Tree:

This subclass is indented under 563. Subject matter comprising a light source adapted for illuminating a perennial woody plant, having an erect stem or trunk and a well developed crown or leaf canopy.

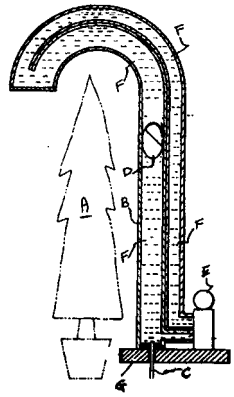

Figure 1: A typical example of the subject matter. A - Tree cultivated by light rays emitted from `B' as a light source performing photosynthesis reaction; B - Transparent cylinder; C - Optical conductor; D - Transparent optical means can be moved up and down through differential pressure of `F'; E - Liquid pump; F - Optical oil ; G - Base or foundation; Note: Liquid rays transmitted through `C' are emitted into `B' from light emitting edge of `C'

SEE OR SEARCH THIS CLASS, SUBCLASS:

122+, for a plant-like ornament or wreath including a tree.

SEE OR SEARCH CLASS:

385, Optical Waveguides, subclasses 115+ for an optical fiber bundle in general.

565 Ornamental or decorative:

This subclass is indented under 551. Subject matter wherein the fiber, rod, or pipe is adapted to provide the beauty or elegance.

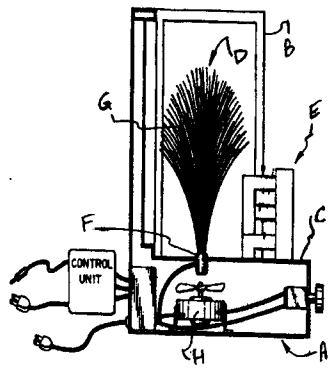

Figure 1: A typical example of the subject matter. A - Base housing ; B - Side panel; C - Top wall of `A'; D, E - Spray assembly and structure to simulate musical staff; F - Socket; G - Optical fiber bundle; H - Fan to move or sway optical fibers

SEE OR SEARCH THIS CLASS, SUBCLASS:

806+, for an illuminating means adapted for ornamental or decorative purposes, and subclass 123 for a light source used to decorate a floor.

SEE OR SEARCH CLASS:

84, Music, subclasses 464+ for a music accessory for producing color or light effects.

428, Stock Material or Miscellaneous Articles, subclasses 542.2+ for a decorative article in general.

566 With star or cross:

This subclass is indented under 565. Subject matter comprising a light source with a plurality of elongated, shaped elements having a central ornament.

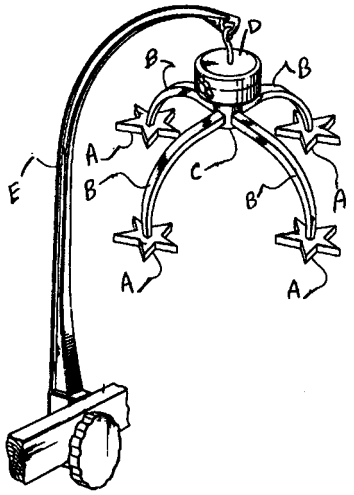

Figure 1: A typical example of the subject matter. A - Star; B - Arm carries optical fibers; C - Hub; D - Central housing to supply power ; E - Hanger

SEE OR SEARCH THIS CLASS, SUBCLASS:

121, for a light source having a star or cross, and subclasses 227+ for plural light sources in general.

SEE OR SEARCH CLASS:

40, Card, Picture, or Sign Exhibiting, appropriate subclasses, for movable display exhibitors or those with the illusion of motion, and with illuminating means.

428, Stock Material or Miscellaneous Articles, subclass 3 for a religious artifact in general (e.g., cruciform), and subclass 11 for a ball, bell, or star-shaped special occasion ornament in general.

567 Tree- or plant-like (e.g., tree simulation):

This subclass is indented under 565. Subject matter comprising an ornamental structure of transparent or translucent material formed as an artificial perennial woody plant, flower, or other similar artistic object.

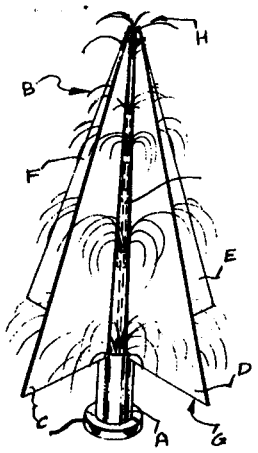

Figure 1: A typical example of the subject matter. A - Base of the tree; B - Backstop comprises four triangular; members `C', `D', `E', & `F'; C, D, E, F - Triangular members disposed to form a pyramidal structure with wide base `G' and narrow apex `H'; G - Wide base; H - Narrow apex

SEE OR SEARCH THIS CLASS, SUBCLASS:

122+, for a plant-like ornament or wreath.

SEE OR SEARCH CLASS:

428, Stock Material or Miscellaneous Articles, subclasses 18+ for a three-dimensional imitation tree, and sub-

classes 24+ for an imitation flower or flower petal.

568 Christmas tree:
This subclass is indented under 567. Subject matter wherein the ornamental structure is an artificial perennial plant adapted for use as a Christmas tree.

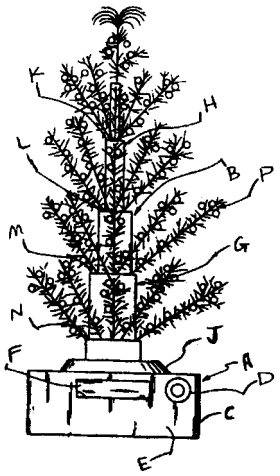

Figure 1: A typical example of the subject matter. A - Base ; B - Simulated tree trunk; C - Container; D - Electrical switch; E - Front wall; F - Pivotable door; G, H - Tubular trunk members; J - Mounting collar; K, L, M, N - Landings or shoulders ; P - Branch

569 Filament lamp simulating candle:
This subclass is indented under 565. Subject matter wherein the ornamental or decorative structure is shaped to imitate the flame of a wax cylinder containing a wick.

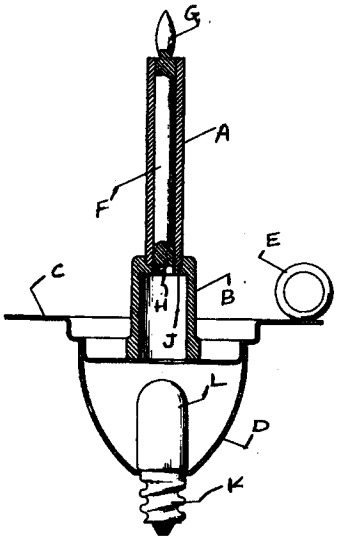

Figure 1: A typical example of the subject matter. A - Hollow cylindrical candlestick member; B - Hollow base member; C - Dish-shaped core portion; D - Oval supporting member with handle `E'; E - Handle; F - Core of `A' with upper end `G'; G - Upper end; H - Lower end of core `F'; J - Base of candlestick member; K- Outer threaded portion of bulb `L'; L - Electric bulb

SEE OR SEARCH THIS CLASS, SUBCLASS:
810, for an imitation candle used as an ornamental or decorative structure.

SEE OR SEARCH CLASS:
385, Optical Waveguides, subclass 901 for illuminating or display apparatus which may include an imitation candle structure.
431, Combustion, subclasses 289+ for a candle structure in addition to wax and wick.

570 With wearing apparel or body support:
This subclass is indented under 551. Subject matter comprising a garment, covering, or clothing, intended to be worn by a person or a harness to be worn by an animal, combined with a light distribution system adapted for distributing a pattern of light over the garment covering, clothing, or harness.

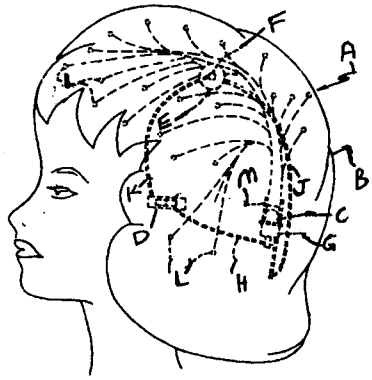

Figure 1: A typical example of the subject matter. A - Wig; B - Outer hairy surface; C - Lamp; D - Switch; E - Battery assembly; F - Electrical terminal; G - Bulb socket; H, J, K - Electrical leads; L - Plurality of light conducting optical fibers integrated into wig; M - Cylindrical light directing structure

SEE OR SEARCH THIS CLASS, SUBCLASS:

103+, for a light distribution system adapted for use with wearing apparel or body support, subclasses 190+ for a self-powered lamp with support means which may be intended for a body support, and subclass 252 for plural light sources with support including particular arrangement such as ornamental star.

SEE OR SEARCH CLASS:

36, Boot, Shoes, and Leggings, subclasses 136+ for a shoe attachment including light-reflecting illumination means.

116, Signals and Indicators, digest 5 for light guides.

571 Jewelry:

This subclass is indented under 570. Subject matter including a light source combined with an article generally composed of precious stone or metal or of an analogous nature or imitation of the same and intended to be worn upon the person as an ornament.

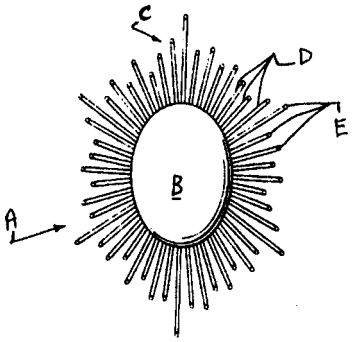

Figure 1: A typical example of the subject matter. A - Jewelry pin; B - Central decorative dome; C, D - An array of optical fibers projecting radially from `B'; E - Outer tips of optical fibers angled to face away from the person wearing the pin

SEE OR SEARCH THIS CLASS, SUBCLASS:

104, for jewelry with illuminating means

SEE OR SEARCH CLASS:

24, Buckles, Buttons, Clasps, etc., appropriate subclasses for jewelry fasteners.

63, Jewelry, appropriate subclasses for jewelry, per se.

572 Medical (e.g., surgical or dental):

This subclass is indented under 551. Subject matter comprising a source of illumination for providing illumination to parts of a living being for the purpose of examining or treating the body of the living being.

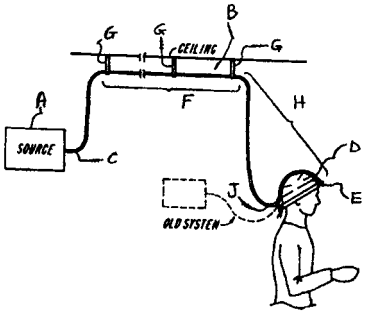

Figure 1: A typical example of the subject matter. A - Light source ; B - Light pipe; C - Pipe end in optical communication with `A'; D - Distal end in optical communication with `E'; E -Beam shaping optics; F - First

light pipe section; H, J - Tethered light pipe section secured to surgeon's head

SEE OR SEARCH THIS CLASS, SUBCLASS:
804, for a surgical or dental spotlight.

SEE OR SEARCH CLASS:
128, Surgery, subclass 6 for an illuminating endoscope, and subclass 23 for lamps used for diagnostic testing.
385, Optical Waveguides, subclasses 117+ for an optical fiber bundle used as a fiber scope or endoscope, and subclass 902 for nonbundle fiber scope devices.
606, Surgery, subclasses 4+ for an ophthalmic light application, and subclass 16 for a light application with optical fiber.
607, Surgery: Light, Thermal, and Electrical Application, subclass 93 for a light pipe applicator.

573 Dental lighting fixture:
This subclass is indented under 572. Subject matter comprising a light source especially adapted for treatment wherein the body part is an oral cavity of the living being.

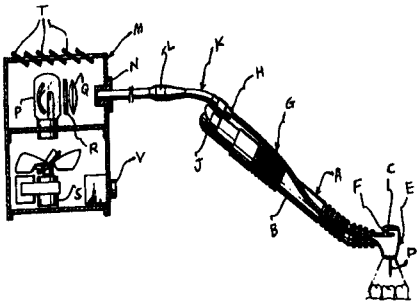

Figure 1: A typical example of the subject matter. A - Dental handpiece; B - Handle; C - Chuck portion; D - Dental drill; E - Head; F - Spring clip; G - Fiber-optic light transmitters; H - Transition section; J - Spring clip; K - Unitary fiber-optic transmitter; L - Coupler; M - Light source housing; N - Fitting; P - High intensity lamp; Q - Condensing lens; R - Filter; S - Cooling fan; T - Louvers; V - Lamp control

SEE OR SEARCH THIS CLASS, SUBCLASS:
804, for dental or surgical spotlights.

SEE OR SEARCH CLASS:
128, Surgery, subclasses 6+ for an illuminating endoscope.
250, Radiant Energy, subclasses 503.1+ for an ultraviolet or infrared handheld radiation source with a radiation modifying member.
385, Optical Waveguides, subclass 902 for nonbundle fiberscope devices.
433, Dentistry, subclasses 29+ for apparatus having a means to emit radiation or facilitate viewing of the work.

574 Endoscopy:
This subclass is indented under 572. Subject matter wherein the body part is a body cavity or hollow organ.

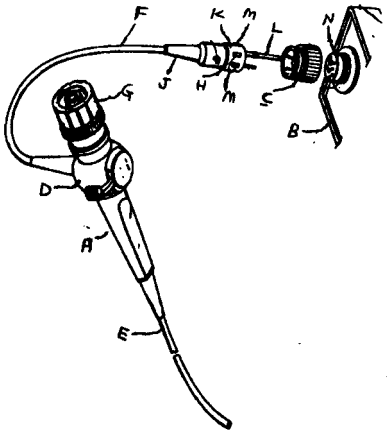

Figure 1: A typical example of the subject matter. A - Endoscope; B - Light source unit; C - Adapter; D - Control section; E - Flexible guide cable with fiber bundle; F - Light guide cable with fiber bundle; G - Eyepiece; H, J, K - Connector assembly; L - Projected pipe with light guide; M - Electrical contracts; N - Socket

SEE OR SEARCH CLASS:
128, Surgery, subclasses 6+ for various illuminating endoscopes.
352, Optics: Motion Pictures, subclass 200 for a projection light source with intermittent light, and subclass 203 for projector illuminators.
385, Optical Waveguides, subclasses 117+ for a fiber scope endoscope.
396, Photography, subclass 62 for eye, mouth, or body photography, and sub-

classes 126+ for object illumination combined with camera structure.

575 Microscopic diagnosis:
This subclass is indented under 572. Subject matter comprising a lighting device capable of lighting a surface of an observed section of a magnified specimen sample.

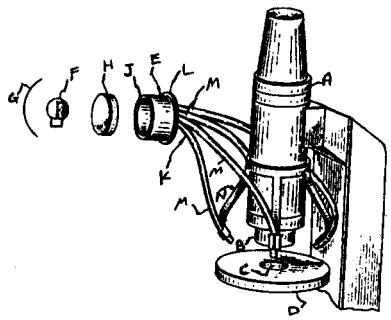

Figure 1: A typical example of the subject matter. A - Microscope; B - Objective to observe object `C`; C - Object; D - Table; E - Illuminator; F - Light source operates with `G' & `H'; G - Reflector; H - Lens; J - Light receiving surface ; K - Fiber-optic bundle; L - Sleeve; M - Plurality of optical fiber strands; N - Spider support

SEE OR SEARCH CLASS:
359, Optics: Systems (Including Communication) and Elements, subclasses 385+ for a compound lens system including a microscope having an illuminator.

576 With static structure (e.g., building interior, framework of tent, wall, ceiling):
This subclass is indented under 551. Subject matter comprising a light source combined with a component of a constructed stationary body.

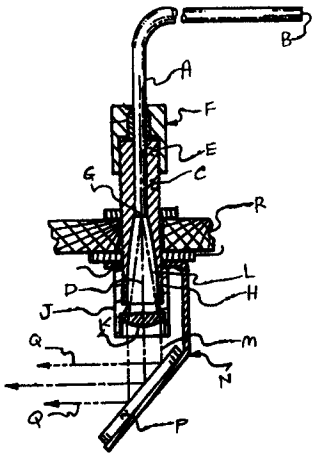

Figure 1: A typical example of the subject matter. A - Fiber-optic light guide; B - First end receiving light from remote source ; C - Tubular housing; D - Optical axis; E - Proximal end with `F'; F - Light guide retaining means; G - Light emitting end; H - Distal end holding `J'; J - Lens-holding bezel; K - Optical element; L - Light emitted by `A'; M - Collimated beam light formed by `A' on `D'; N - Mirror mount bracket; P - Mirror reflects `M'; Q - Transverse beam of light formed from `M'; R - Ceiling panel

SEE OR SEARCH THIS CLASS, SUBCLASS:
100, for a door knob or keyhole illuminator.
101, for an illumination means combined with a liquid container, and subclasses 145+ for an illumination means combined with a static structure.

SEE OR SEARCH CLASS:
40, Card, Picture, or Sign Exhibiting, subclass 545 for an illuminated sign having a gas-filled tube.
52, Static Structures (e.g., Buildings), subclass 28 for an artificial illumination means, and subclasses 306+ for a visible translucent block or embedded component.
135, Tent, Canopy, Umbrella, or Cane, subclasses 91+ for a portable shelter with heating, lighting, or ventilating.
359, Optics: Systems (Including Communications) and Elements, subclasses 591+ for a building interior illumination with a static structure in general.

577 With portable hand-held implement (e.g., cane, baton, umbrella, club):
This subclass is indented under 551. combined with a device readily carried or moved by a human being whose function is to perform or assist in the performance of a specific operation.

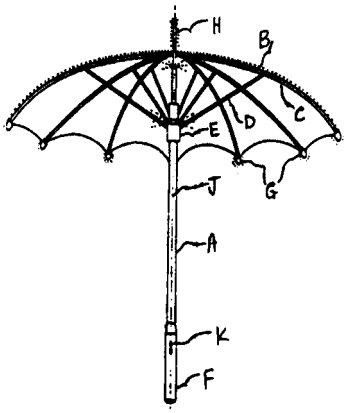

Figure 1: A typical example of the subject matter. A - Umbrella stick with coaxial light conductors; B - Cover (inner light conductors supply light to the central region of the cover); C - Rib with light conductors; D - Struts; E - Slide; F - Handle comprises optical means (battery, light bulb, reflector and a lens; G - Light spreading top spike; H - Light spreading top spike; J - Optical axis; K - Manually slidable control button

SEE OR SEARCH THIS CLASS, SUBCLASS:
23+, for a hand-held instrument with an illuminated scale or dial; subclass 34 for a chemiluminescent illuminator that may be hand-held, subclass 96 for a hand-held fluid dispenser with an illuminator, subclass 101 for a hand-held liquid container with an illuminator, subclass 102 for a illuminator combined with a cane, baton, umbrella, or club, subclasses 109+ for an illuminator combined with an implement or hand-held holder, subclasses 138+ for an inspection device with a mirror and an illuminator, and subclasses 154+ for an illuminator combined with a container.

SEE OR SEARCH CLASS:
33, Geometrical Instruments, subclasses 348+ for a spirit level electric illuminator.
128, Surgery, subclasses 6+ for an illuminating endoscope which may be hand-held, and subclasses 15+ for a hand-held illuminating tongue depressor.
135, Tent, Canopy, Umbrella or Cane, subclass 910 for an illuminated cane or umbrella.
222, Dispensing, subclass 113 for an illuminator or burner in general which may include a hand-held dispenser.

578 Workpiece illuminating screwdriver:
This subclass is indented under 577. Subject matter comprising a work-illuminating tool consisting of a thin, wedge-shaped or fluted end wherein the illuminating means is incorporated to project a beam of light upon the work upon which the tool is being used.

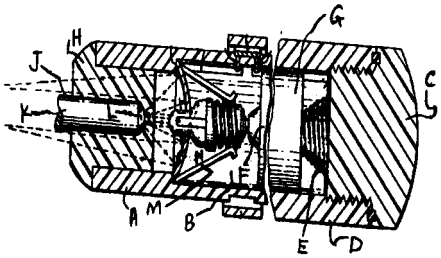

Figure 1: A typical example of the subject matter. A - Casing ; B - Chamber; C - Removable cap; D - Handle; E - Spring in electrical engagement with `F' & `G'; F - Dry cell; G - Dry cell; H - Plastic plug; J - Axial bore socket; K - Screw driver provided with convex reflective surface `L'; L - Convex reflective surface; M, N - Spring and reflector plate to hold bulb

SEE OR SEARCH THIS CLASS, SUBCLASS:
119+, for an elongated-type hand tool.

579 Writing utensil (e.g., pen, pencil):
This subclass is indented under 577. Subject matter comprising a pen or pencil having a self-contained light source or a combined flashlight and pen or pencil holder.

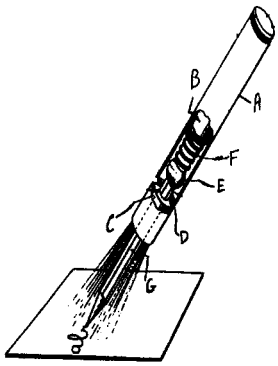

Figure 1: A typical example of the subject matter. A - Metal elongated casing; B - Dry cell; C - Translucent plug; D - Annular groove or stop; E - Light bulb; F - Spring; G - Pencil sub

SEE OR SEARCH THIS CLASS, SUBCLASS:

115, for an implement or hand-held holder used by a barber which may include a cutting tool in combination with a writing tool and may include a light source, and subclass 118 for a pen or pencil with a light source.

SEE OR SEARCH CLASS:

116, Signals and Indicators, digest 5 for a signal or indicator using a light guide, and digest 36 for a signal or indicator having an illuminated dial or pointer.

235, Registers, subclass 70 for a calculator with a slide rule pencil which may include a light source.

324, Electricity: Measuring and Testing, subclass 506 for a fault detector in an electric circuit combined with a flashlight.

401, Coating Implement with Material Supply, subclasses 104+ for a clasp or a pocket clip associated with project-retract means which may include a light source.

607, Surgery: Light, Thermal, and Electrical Application, subclasses 145+ for a hand-held writing instrument.

580 With ventilating or cooling or thermally controlled light guide:

This subclass is indented under 551. Subject matter wherein heat is dissipated from the source of illumination by a heat sink either by flowing air, by a plurality of heat dissipating plates or by a plurality of pipe- like escape holes.

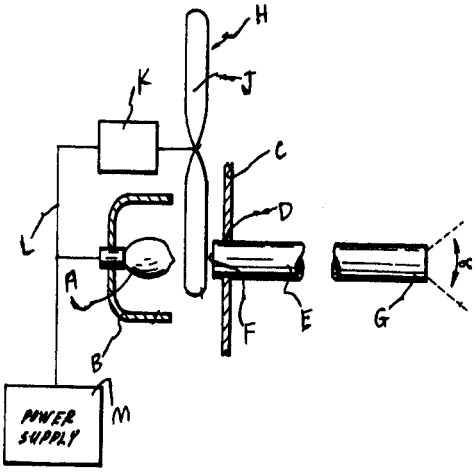

Figure 1: A typical example of the subject matter. A - High intensity light source; B - Reflector ; C - Housing wall with aperture `D'; D - Aperture; E - Light conduit (fiber-optic bundle); F - End to receive high intensity light source `A'; G - Remote end through which light is transmitted at an angle `alpha'; H - Impeller with vanes `J'; J - Vanes to displace air heated by `A'; K - Motor to drive impeller `H'; L - Lead wire; M- Power supply

SEE OR SEARCH THIS CLASS, SUBCLASS:

294, for a light source and a modifier with ventilating, cooling, or heat insulating means.

SEE OR SEARCH CLASS:

355, Photocopying, subclass 30 for a projection printing and copying camera with temperature or foreign particle control.

359, Optics: Systems (Including Communication) and Elements, subclass 395 for a microscope with a stage or slide carrier having a temperature control.

581 With mounting or holding means (e.g., clamp, disengagable mechanical connector, optical fiber holder):

This subclass is indented under 551. Subject matter wherein significance is attributed to a

supporting structure or attachment means for the light source.

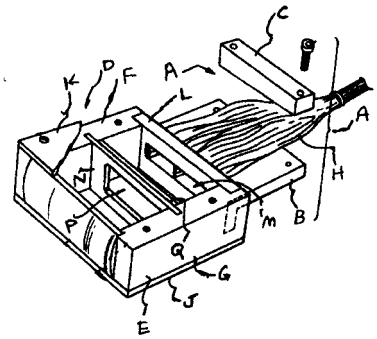

Figure 1: A typical example of the subject matter. A - Clamping assembly with support plate `B'; B - Support plate; C - Clamping block; D - Illumination device; E - Housing; F, G - Housing optic bundles; H - Fiber-optic bundles; J, K - Housing top and bottom plates; L - Housing end wall; M - Opening for fiber bundles `H'; N - Aperture plate with aperture `P'; P - Aperture; Q - Polarizer

SEE OR SEARCH THIS CLASS, SUBCLASS:
455, for a lens holder or support.

SEE OR SEARCH CLASS:
24, Buckles, Buttons, Clasps, etc., subclasses 489+ for a support clamp or a gripping member in general.
385, Optical Waveguides, subclasses 88+ for an optical fiber to a nonfiber-optical device connector, and subclasses 138+ for an external retainer clamp or fiber holder.
607, Surgery: Light, Thermal, and Electrical Application, subclasses 149+ for a means for holding a light applicator against a body tissue.

582 Specific material (e.g., type of light conducting material, material of pipe or rod):
This subclass is indented under 551. Subject matter wherein significance is attributed to a substance used in making the optical fiber, rod, or pipe.

SEE OR SEARCH THIS CLASS, SUBCLASS:
318, for a fluid medium-type light modifier.

SEE OR SEARCH CLASS:
264, Plastic Nonmetallic Article Shaping or Treating: Processes, subclasses 1.1+ for optical article shaping or treating in general.
385, Optical Waveguides, subclasses 123+ for an optical fiber waveguide with cladding material in general, and subclasses 141+ for an optical fiber waveguide having a particular optical characteristic modifying a chemical position.

583 With filter device:
This subclass is indented under 551. Subject matter comprising variable colored light indicating means for projecting individually, sequentially, or simultaneously different colored beams of light.

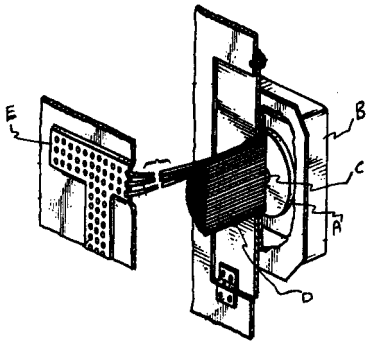

Figure 1: A typical example of the subject matter. A - Color wheel; B - Motor unit; C - Wheel shaft; D - Fiber-optic cable; E - Display

SEE OR SEARCH THIS CLASS, SUBCLASS:
35, for revolving illumination in general.

SEE OR SEARCH CLASS:
345, Computer Graphics Processing and Selective Visual Display Systems, subclasses 55+ for display elements arranged in a matrix in general.

600 EDGE LIGHTED PANEL:
This subclass is indented under the class definition. Subject matter indented comprising a light source or support therefor combined with a light transmissive material in the form of a

solid having two opposite surfaces with overall dimensions very much greater than the distance between them and having at least one narrow surface (i.e., "edge") joining the two opposite surfaces and exposed to light from the source such that light from the source enters the material through the narrow surface and is transmitted within the material by internal reflections from the opposite surfaces or by nodal transmission.

SEE OR SEARCH CLASS:
349, Liquid Crystal Cells, Elements and Systems, subclass 65 for edge lighted panel with LCD.

601 Having additional panel emitting mutiple wavelenght light:
This subclass is indented under subclass 600.
Subject matter indented comprising a panel or panels emitting light of different wavelengths including a light source or support therefor combined with a light transmissive material in the form of a solid having two opposite surfaces with overall dimensions very much greater than the distance between them and having at least one narrow surface (i.e., "edge") joining the two opposite surfaces and exposed to light from the source such that light from the source enters the material through the narrow surface and is transmitted within the material by internal reflections from the opposite surfaces or by nodal transmission.

602 Particular application:
This subclass is indented under subclass 600.
Subject matter indented wherein the edge lighted panel has a precise purpose.

603 Front light:
This subclass is indented under subclass 602.
Subject matter indented wherein the particular application is to provide uniform illumination from the viewing side of the edge lighted panel.

(1) Note. The light output face is opposite the viewing face.

SEE OR SEARCH CLASS:
349, Liquid Crystal Cells, Elements and Systems, subclass 63 specifically for guiding light in a front-lit device in a liquid crystal system.

604 Exhibit:
This subclass is indented under subclass 602.
Subject matter indented wherein the particular application is illuminating a document, picture, map, graph or a similar item to be viewed.

605 Ornamental or decorative:
This subclass is indented under subclass 602.
Subject matter indented wherein the edge lighted panel is adapted to provide beauty or elegance.

SEE OR SEARCH THIS CLASS, SUBCLASS:
565, for an ornamental or decorative design in a fiber, rod, or pipe.
806, for an ornamental or decorative design in a cross-reference art collection.

606 Light modifier with emission face combined with light guide plate:
This subclass is indented under subclass 600.
Subject matter indented wherein one of the opposite surfaces of the light transmissive material is the main surface through which light is emitted and includes at least one means for optically changing the light emitted through the main surface.

607 Combination of two or more modifiers:
This subclass is indented under subclass 606.
Subject matter indented wherein the light source has at least two means for optically changing the light emitted through the main surface.

608 Light modifier for edge lit light source (incident edge):
This subclass is indented under subclass 600.
Subject matter indented wherein the light source has at least one means for optically changing the light entering the material through the narrow surface.

609 Reflector:
This subclass is indented under subclass 608.
Subject matter indented wherein the light modifier means is a device, which redirects incident light back into a medium.

SEE OR SEARCH THIS CLASS, SUBCLASS:
623, for the reflective face in a light guide of the edge lighted panel.

610 Optical waveguide:
This subclass is indented under subclass 608.
Subject matter indented wherein the light modifier is a transparent, relatively elongated surface that transmits light rays from one point to another within the confines of its outer surface or surfaces by internal reflections.

SEE OR SEARCH THIS CLASS, SUBCLASS:
26, for an optical waveguide in an edge illuminated modifier or light rod or pipe.
51, for an optical waveguide (e.g., fiber optic, edge-lit) in a light modifier supported by vehicle.

611 Light source:
This subclass is indented under subclass 600.
Subject matter indented wherein an element (e.g., filament) or material (e.g., neon), which converts energy into visible radiant energy and/or the essential container of such an element or material, i.e., a light source envelope including the envelope base (e.g., light bulb, fluorescent tube).

(1) Note. Unless otherwise specified a light source is assumed to be a point source.

(2) Note. For purposes of classification within this class, nominal recitations such as "light unit", "lamp", "headlight", etc., are assumed to denote only a light source.

SEE OR SEARCH THIS CLASS, SUBCLASS:
216, for curvilinear light source, per se.
257, for light source (or support therefor) and modifier, per se.

612 Light Emitting Diode (LED):
This subclass is indented under subclass 611.
Subject matter indented comprising a two-electrode semiconductor device emitting incoherent optical radiation when biased by a voltage in a forward direction.

SEE OR SEARCH THIS CLASS, SUBCLASS:
545, for light emitting diode in plural light sources supported by vehicle structure.
555, for light emitting diode (LED) in a light fiber, rod, or pipe.
800, for light emitting diode in a cross-reference art collection.

613 Plural:
This subclass is indented under subclass 611.
Subject matter indented wherein the illuminating structure includes more than one light source.

SEE OR SEARCH THIS CLASS, SUBCLASS:
27, for plural light sources in an illuminated scale or dial.
227, for plural light sources, per se.

614 Fluorescent:
This subclass is indented under subclass 611.
Subject matter indented wherein the source of light is a gaseous material having a phosphor envelope which emits visible light when irradiated by invisible radiation.

SEE OR SEARCH THIS CLASS, SUBCLASS:
217, for elongated fluorescent type light source or support.
260, for fluorescent type light source and modifier.

615 Light guide:
This subclass is indented under subclass 600.
Subject matter indented comprising a light transmitting material having a relatively narrow surface or side disposed adjacent to a light source.

SEE OR SEARCH THIS CLASS, SUBCLASS:
26, for a light guide in an edge lighted modifier or light rod/pipe.
511, for a light guide in a light modifier supported by vehicle structure.

SEE OR SEARCH CLASS:
385, Optical Waveguides, subclass 146 for noncylindrical or nonplanar shaped waveguide.

616 Plural or compound:
This subclass is indented under subclass 615. Subject matter indented wherein the total light guide structure is comprised of more than one light guide.

617 Emission face:
This subclass is indented under subclass 615. Subject matter indented wherein the top or bottom surface of the light guide sends out light.

618 Film or coating:
This subclass is indented under subclass 617. Subject matter indented wherein an optically transmissive covering or layer has been applied to the emission face of the light guide.

SEE OR SEARCH THIS CLASS, SUBCLASS:
622, for film or coating on the incident face.
624, for film or coating on the reflective face.
627, for film or coating on the light guide, per se.

619 Type of surface:
This subclass is indented under subclass 617. Subject matter indented wherein the exterior or upper boundary of the emission face has been modified for an optical purpose.

SEE OR SEARCH THIS CLASS, SUBCLASS:
625, for type of surface in a reflective face.

620 Prism:
This subclass is indented under subclass 619. Subject matter indented wherein the exterior or upper boundary of the emission face has been modified for an optical purpose with the shape of pyramid or triangle.

SEE OR SEARCH THIS CLASS, SUBCLASS:
339, for prismatic type in a refractor in a light modifier.
626, for prism type of surface in a reflective face.

621 Incident face:
This subclass is indented under subclass 615. Subject matter indented wherein the side surface or edge surface of the light guide receives light.

622 Film or coating:
This subclass is indented under subclass 621. Subject matter indented wherein an optically transmissive covering or layer has been applied to the incident face of the light guide.

SEE OR SEARCH THIS CLASS, SUBCLASS:
618, for film or coating on the emission face.
624, for film or layer on the reflective face.
627, for film or coating on the light guide, per se.

623 Reflective face:
This subclass is indented under subclass 615. Subject matter indented wherein the top or bottom surface of the light guide redirects the light back into the light guide.

SEE OR SEARCH CLASS:
359, Optical: Systems and Elements, 884 for selective absorption or transparent overcoating on a mirror.

624 Film or coating:
This subclass is indented under subclass 623. Subject matter indented wherein an optically transmissive covering or layer has been applied to the reflective face of the light guide.

SEE OR SEARCH THIS CLASS, SUBCLASS:
618, for film or coating on the emission face.
622, for film or coating on the incident face.
627, for film or coating on the light guide, per se.

625 Type of surface:
This subclass is indented under subclass 623. Subject matter indented wherein the exterior or upper boundary of the reflective face has been modified for an optical purpose.

SEE OR SEARCH THIS CLASS, SUBCLASS:
619, for type of surface in an emission face.

626 Prism:
This subclass is indented under subclass 625. Subject matter indented wherein the exterior or upper boundary of the reflective face has been modified for an optical purpose with the shape of a pyramid or triangle.

SEE OR SEARCH THIS CLASS, SUBCLASS:
339, for prismatic type in a refractor in a light modifier.
620, for prism type of surface in an emission face.

627 Film or coating:
This subclass is indented under subclass 615. Subject matter indented wherein an optically transmissive covering or layer has been applied to the light guide.

SEE OR SEARCH THIS CLASS, SUBCLASS:
618, for film or coating on the emission face.
622, for film or coating on the incident face.
624, for film or coating on the reflective face.

628 Shape:
This subclass is indented under subclass 615. Subject matter indented wherein the light guide has a definite form for an optical purpose.

(1) Note. The wedge shape is often used.

629 Material:
This subclass is indented under subclass 615. Subject matter indented wherein the light guide has physical properties or specific substances added for optical purposes.

SEE OR SEARCH THIS CLASS, SUBCLASS:
582, for a specific material (e.g., type of light conducting material, material of pipe or rod) in a light fiber, rod, or pipe.

630 Electrical wiring elements:
This subclass is indented under subclass 600. Subject matter including means for conducting electrical current in the panel.

631 Circuit board:
This subclass is indented under subclass 630. Subject matter comprising an insulating panel wherein conductors are applied thereto by coating, laminating, or bonding in such a manner that the conductors are permanently attached to the panel are included in the means for conducting electrical current in the edge lighted panel.

632 Housing:
This subclass is indented under subclass 600. Subject matter comprising means for surrounding and supporting the illuminating means.

(1) Note. This subclass includes the housing structure having an opening for the egress of light and for which no light modifying function is claimed.

SEE OR SEARCH THIS CLASS, SUBCLASS:
362, for a housing unit, per se, in an illumination system.

SEE OR SEARCH CLASS:
349, Liquid Crystal Cells, Elements and Systems, subclass 58 for holder, support, frame, or housing in the particular structure of a liquid crystal system.

633 Frame:
This subclass is indented under subclass 632. Subject matter wherein the illumination device is supported by skeletal-type beams forming an open frame or support.

634 Holder:
This subclass is indented under subclass 632. Subject matter wherein the illumination device is gripped in place.

SEE OR SEARCH THIS CLASS, SUBCLASS:
581, for mounting or holding means in a light fiber, rod, or pipe.

640 QUICK DISCONNECT-TYPE LIGHT UNIT:
This subclass is indented under the class definition. Subject matter indented comprising an electric light source or an electric light source support and a housing or modifier for the light source mutually supported by electrical connector means, which are quickly attachable to and removable from an electric circuit.

SEE OR SEARCH CLASS:
313, Electric Lamp and Discharge Devices, subclass 1 for the line between this class and Class313.

641 Night light:
This subclass is indented under subclass 640. Subject matter indented comprising a light source with a housing and/or modifier, the housing and/or modifier may leave the light source exposed or substantially enclose the light source, a male plug connector electrically connected to the light source and fitted to engage a wall outlet plug to provide low-level illumination of a room at night.

642 Sensor:
This subclass is indented under subclass 641. Subject matter indented including a device that responds to a physical stimulus and transmits a control signal to the light source.

SEE OR SEARCH THIS CLASS, SUBCLASS:
276, for a condition responsive mean that includes a sensor in a light source (or support therefor) and modifier.
802, for a condition responsive mean that includes a sensor in a cross-reference art collection.

SEE OR SEARCH CLASS:
250, Radiant Energy, subclass 216 for a photocell type sensor that includes means (i.e., ambient light, optical or pre-photocell system) for illuminating the photocell and subclass 227.11 for subject matter with an optical or pre-photocell system including a light conductor (e.g., optical fiber or rod).

643 Air freshener:
This subclass is indented under subclass 641. Subject matter indented including air filtering or deodorizing means in the night-light.

SEE OR SEARCH THIS CLASS, SUBCLASS:
96, for fluid distributor, per se, in an illumination device or system.

SEE OR SEARCH CLASS:
422, Chemical Apparatus and Process Disinfecting, Deodorizing, Preserving, or Sterilizing, subclass 120 for deodorizing of, or chemical purification of, life sustaining environmental gas, per se.

644 Ornamental or decorative:
This subclass is indented under subclass 641. Subject matter indented wherein the night light is adapted to provide beauty or elegance.

SEE OR SEARCH THIS CLASS, SUBCLASS:
565, for an ornamental or decorative design in a fiber, rod, or pipe.
605, for ornamental or decorative in a particular application in an edge lighted panel.
654, for ornamental or decorative in push to engage in particular engagement.
806, for ornamental or decorative in a cross-reference art collection.

645 With sealing:
This subclass is indented under subclass 640. Subject matter indented having a means (e.g., gasket) filling the space between two adjacent elements to prevent matter on one side of the elements from passing between them to the other side.

SEE OR SEARCH THIS CLASS, SUBCLASS:
267, for sealing means or article atmosphere in a light source (or support therefor) and modifier.

646 Circuit board:
This subclass is indented under subclass 640. Subject matter is indented comprising an insulating panel wherein conductors are applied thereto by coating, laminating, or bonding in

such a manner that the conductors are permanently attached to the panel are included in the means for conducting electrical current in the quick disconnect-type light unit.

647 Particular engagement:
This subclass is indented under subclass 640. Subject matter indented whereby specific means are used to join or fasten together in the quick disconnect-type light unit.

648 Track lighting:
This subclass is indented under subclass 647. Subject matter indented comprising positionable light fixtures electrically connected to pairs of rail conductors.

SEE OR SEARCH CLASS:
439, Electrical Connectors, subclass 110, for uninterrupted support rail or uninterrupted contact, per se, in an electrical connector.

649 Turn to engage:
This subclass is indented under subclass 647. Subject matter indented the specific connecting or fastening comprises rotating or revolving around an axis or center.

650 Threaded (e.g., Edison type):
This subclass is indented under subclass 649. Subject matter indented including a helically ribbed portion adapted to interfit with a portion of a mating part by relative rotation and corresponding axial advance.

SEE OR SEARCH CLASS:
439, Electrical Connectors, subclass 615 for having a screw thread coupling contact in a vitreous-type envelope (e.g., base of lamp).

651 Bayonet type:
This subclass is indented under subclass 649. Subject matter indented having a coupling part designed to be brought into interfitting relationship with a mating part by a first movement along its greatest axis extent and then by a movement about the central axis of the coupling part with respect to the mating part.

SEE OR SEARCH CLASS:
439, Electrical Connectors, subclass 332 for bayonet coupling part movable about its axis in coupling movement actuating means or retaining means in addition to contact of coupling part.

652 Push to engage:
This subclass is indented under subclass 647. Subject matter indented whereby a coupling part is adapted to connect or join a mating part by pure rectilinear movement relative thereto.

SEE OR SEARCH CLASS:
439, Electrical Connectors, subclass 344 for push-pull contacts (e.g., telephone jack or plug) in coupling movement actuating means or retaining means in addition to contact of coupling part.

653 Ornamental or decorative:
This subclass is indented under subclass 652. Subject matter indented whereby the push to engage light unit is adapted to provide beauty or elegance.

SEE OR SEARCH THIS CLASS, SUBCLASS:
565, for an ornamental or decorative design in a fiber, rod, or pipe.
605, for ornamental or decorative in a particular application in an edge lighted panel.
644, for ornamental or decorative in a night light.
806, for ornamental or decorative in a cross-reference art collection.

654 Christmas light:
This subclass is indented under subclass 653. Subject matter indented wherein the ornamental or decorative light is a Christmas light.

SEE OR SEARCH THIS CLASS, SUBCLASS:
568, for a Christmas tree simulation using light fiber, rod, or pipe.

655 Locking:
This subclass is indented under subclass 652. Subject matter indented comprising means to secure a coupling part in electrical current carrying relationship in the push to engage light unit or to secure another member which in turn holds the coupling part in electric current carrying relationship in the push to engage light unit.

656 Snap means:
This subclass is indented under subclass 655. Subject matter indented comprising means securable by a quick-connect action.

657 Male contact:
This subclass is indented under subclass 652. Subject matter indented including a plug adapted to enter a receptacle (i.e., socket) and make an electrical connection.

658 Exposed contacts:
This subclass is indented under subclass 657. Subject matter is indented wherein the plugs are bare conductors (i.e., not insulated).

659 Parallel contacts:
This subclass is indented under subclass 658. Subject matter indented wherein the plugs extend in the same direction and not meeting.

SEE OR SEARCH CLASS:
439, Electrical Connectors, subclass 617 for plug having spaced longitudinally engaging prong-like contacts in vitreous-type envelope (e.g., base of lamp).

CROSS-REFERENCE ART COLLECTIONS

The following subclasses are collections of cross-references of published disclosures pertaining to various specified aspects of the illuminating art which aspects do not form appropriate bases for subclasses in the foregoing classification (i.e., subclasses superior hereto in the schedule). These subclasses assist a search based on remote function of the apparatus and may be of further assistance to the searcher as a starting point in further related fields of search either inside or outside the class. Thus, there is here provided a second access for retrieval of a limited number of types of disclosure.

(1) Note. Disclosures are placed in these subclasses for their value as references and as leads to appropriate main or secondary fields of search without regard to their original classification.

(2) Note. The disclosures cross-referenced into the following subclasses are examples only of the indicated subject matter, and in no instance do they represent the entire extent of the prior art.

800 Devices including a potential barrier between two materials, one of which is a semiconductor, wherein the device is designed to emit light.

801 Devices specifically adapted for illuminating a portion of a bed.

(1) Note. Included herein are devices finding utility in a hospital or convalescent room and may be mounted on a wall, ceiling or bed.

802 Devices including means to complete or break a circuit operable other than by a human or animal and as a function of position or condition.

(1) Note. Included herein are devices of a portable nature.

803 Devices designed to give a nonactinic light for use in photographers' dark rooms.

(1) Note. Included herein are light units which include a light source which emits light which could produce a chemical change (actinic) combined with a medium which blocks or absorbs actinic radiations but passes nonactinic radiations.

(2) Note. Light sensitive material, such as photographic film, may undergo a chemical change as a function of the exposing light intensity or frequency (color). An illuminator that allows "safe" exposure of one specific light sensitive material without unwanted chemical changes may not be "safe" for a different material.

SEE OR SEARCH THIS CLASS, SUBCLASS:
277+, for a light source combined with an adjustable or repositionable light modifier, subclasses 319+ for the adjustable or repositionable light modifier, per se.

804 Devices intended to cast a beam of high intensity light onto a person or animal for therapeutic or diagnostic purposes.

805 Illuminating devices intended to stimulate or contribute to plant growth.

806 Devices designed to give a pleasing effect to the eye and combined with a light source or light source support.

SEE OR SEARCH THIS CLASS, SUBCLASS:
104, for illuminated jewelry.
122+, for wreaths or plants combined with a light source.

SEE OR SEARCH CLASS:
40, Card, Picture, or Sign Exhibiting, appropriate subclasses for illuminated objects of the class type, especially for movable objects that are intended for advertising displays or exhibits.
46, Amusement Devices: Toys, appropriate subclasses for objects that may be handled by a child for amusement.

807 This subclass is indented under subclass 806. Devices comprising a pointed object simulating a star or cross.

SEE OR SEARCH THIS CLASS, SUBCLASS:
121, for devices which include independent static structure with either (1) five or more points that represent a star, or (2) a figure with an upright bar traversed by a horizontal bar, and combined with a light source or light source support.

SEE OR SEARCH CLASS:
428, Stock Material or Miscellaneous Articles, subclass 3 for a religious artifact, such as a cruciform, per se, and subclass 12 for a star-shaped special occasion ornament, per se.

808 This subclass is indented under subclass 806. Devices comprising a figured object combined with a light source or light source support.

SEE OR SEARCH THIS CLASS, SUBCLASS:
104, for jewelry combined with a light source and which may be a figure.
122, through 124, for plants or animals combined with a light source or support.

SEE OR SEARCH CLASS:
428, Stock Material or Miscellaneous Articles, subclasses 3+ for ornamental figures, per se.

809 This subclass is indented under subclass 808. Devices wherein the figure is spherical to resemble a terrestrial body like the earth.

810 This subclass is indented under subclass 806. Devices comprising a light source or light source support in the shape of an elongated taper.

SEE OR SEARCH THIS CLASS, SUBCLASS:
190, for self-power light sources whose light support or base resembles an upright candle.
392+, for imitation candle supports, per se.

SEE OR SEARCH CLASS:
431, Combustion, subclasses 288+ for candles, per se.

811 This subclass is indented under subclass 806. Subject matter comprising special lighting means of an unnatural nature.

812 Devices which include any form of indicia which is not merely decorative in nature.

(1) Note. This subclass would include cross-references of patents classified as originals in Class 40.

SEE OR SEARCH THIS CLASS, SUBCLASS:
23, for illuminated scales or dials with indicia thereon.

SEE OR SEARCH CLASS:
40, Card, Picture, or Sign Exhibiting, subclass 541 for illuminated signs.

FOREIGN ART COLLECTIONS

FOR 100 Edge Lighted Panel:
Foreign art collection comprising a light source or support therefor combined with a

light transmissive material in the form of a solid having two opposite surfaces with overall dimensions very much greater than the distance between them and having at least one narrow surface (i.e., "edge") joining the two opposite surfaces and exposed to light from the source such that light from the source enters the material through the narrow surface and is transmitted within the material by internal reflections from the opposite surfaces or by nodal transmission.

FOR 101 Quick Disconnect Type Light Unit:
Foreign art collection comprising an electric light source or an electric light source support and a housing or modifier for the light source mutually supported by electrical connector means which are quickly attachable to and removable from an electric circuit.

END